F.H.W.A. REGION	STATE	PROJECT NO.	SHEET NO.	TOTAL SHEETS	AS BUILT
9	ARIZ.	I-IR-10-3(409)	7	57	
		010 PN 160			

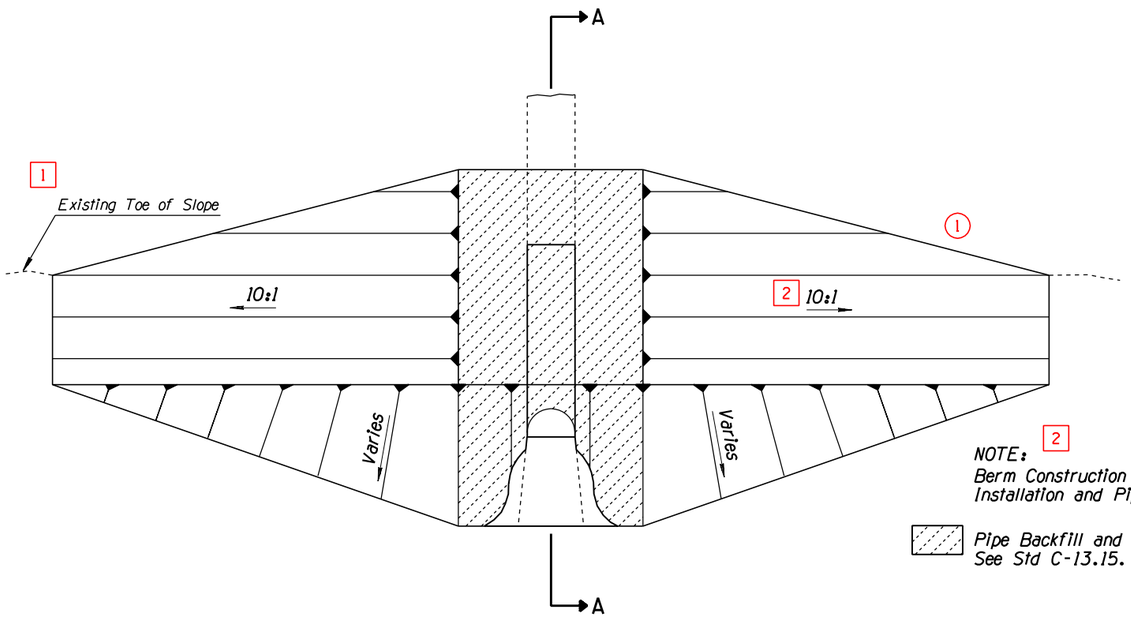

STRAIGHT PIPE PLAN 3

NOTE: 2
Berm Construction Similar for Multiple Pipe Installation and Pipe without End Section.

Pipe Backfill and Bedding Material Limits See Std C-13.15.

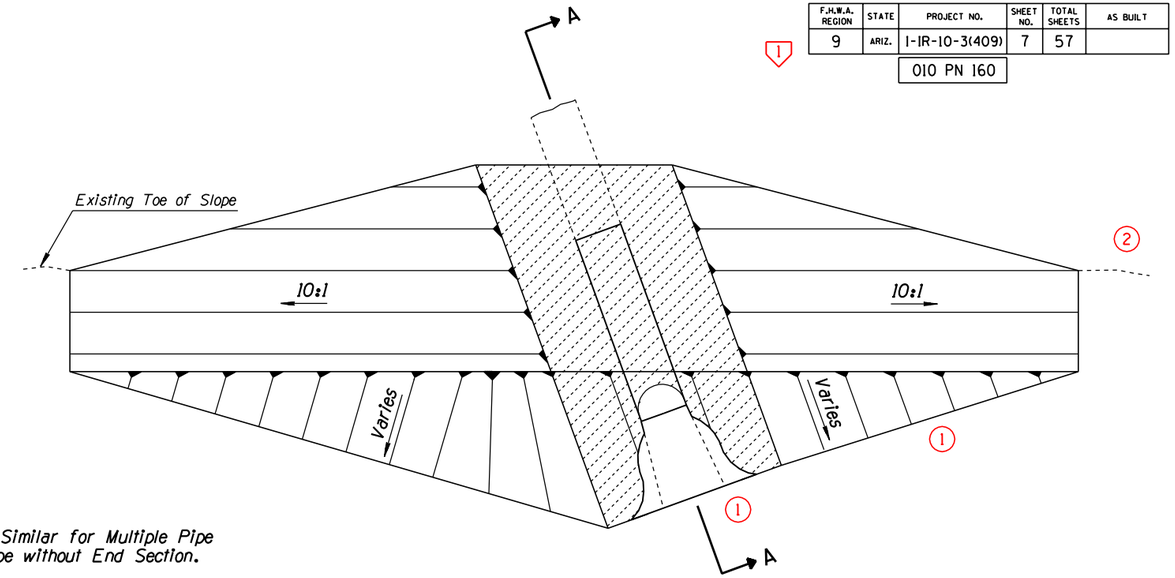

SKEWED PIPE PLAN

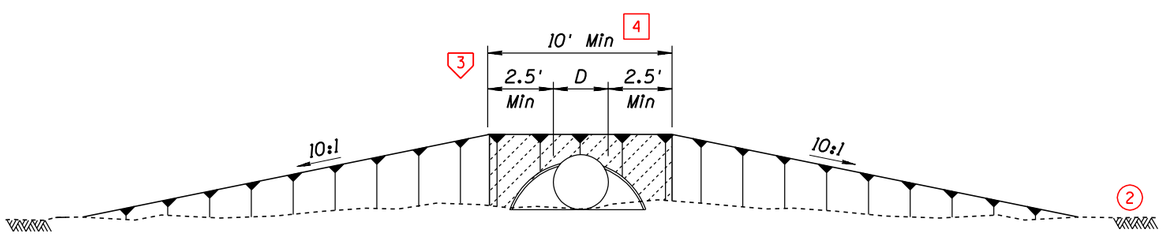

ELEVATION

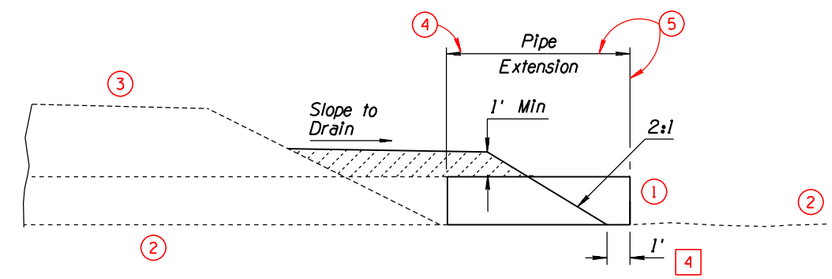

SECTION A-A (WITHOUT END SECTION)

NOTE:
Single Pipe Installation: D=Outside Diameter of Pipe
Multiple Pipe Installation: D=Outside Edge to Outside Edge of Pipes

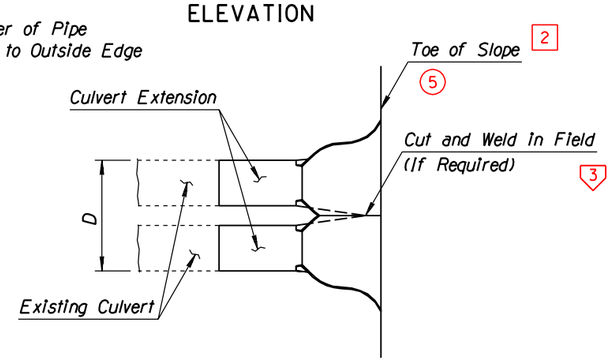

SPECIAL END SECTION

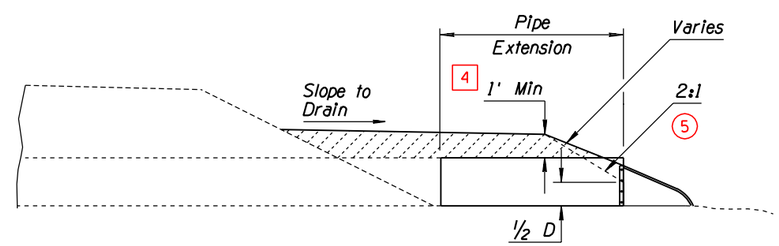

SECTION A-A (WITH END SECTION) 3

DETAIL A

2 PIPE BERM PLACEMENT

	NAME	DATE
DESIGN	T MACBETH	10-90
DRAWN	M HAUER	10-90
CHECKED	R DELANO	11-90
TEAM LEADER	J BRUBAKER	

ARIZONA DEPARTMENT OF TRANSPORTATION
HIGHWAYS DIVISION
HIGHWAY PLANS SERVICES

DETAIL SHEET
DETAIL A

ROUTE I-10 | LOCATION GILA RIVER - CASA BLANCA

SHEET 1 OF 5

TRACS NO. H0000 01 C

___ OF ___

SURVEY NO.	FINISHED PLANS	REVISIONS	LOCATION	DATE

STD P-04.20

cccccDGNcSPECIFICATIONccccc VIEW NAME:
cccccSYSTIMEccccc