F.H.W.A. REGION	STATE	PROJECT NO.	SHEET NO.	TOTAL SHEETS	AS BUILT
9	ARIZ.	RBA-600-1-501	5	541	

101L MA 52

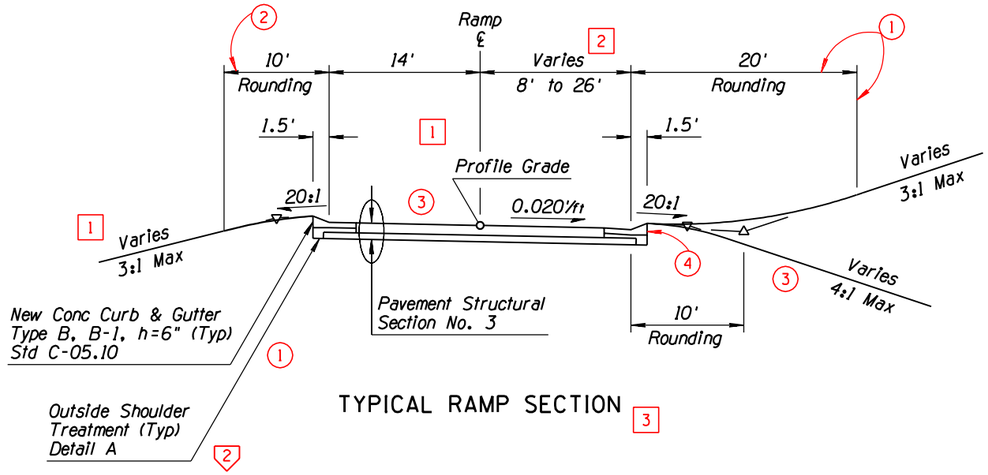

TYPICAL RAMP SECTION

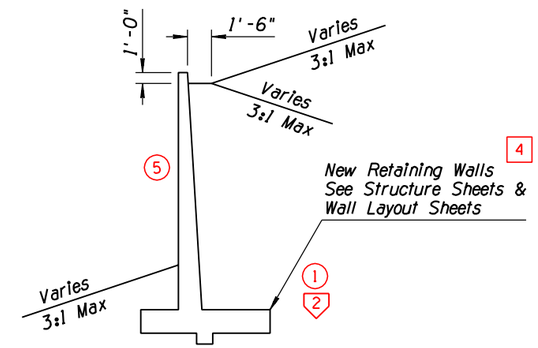

TYPICAL WALL SECTION

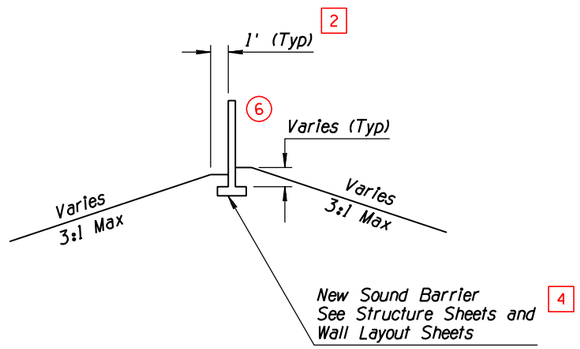

TYPICAL SOUND BARRIER SECTION

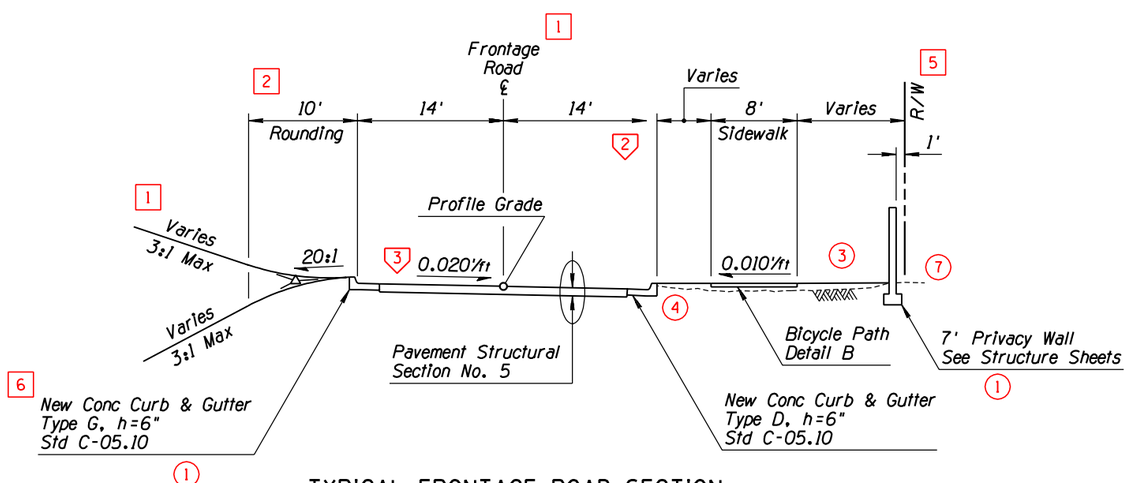

TYPICAL FRONTAGE ROAD SECTION

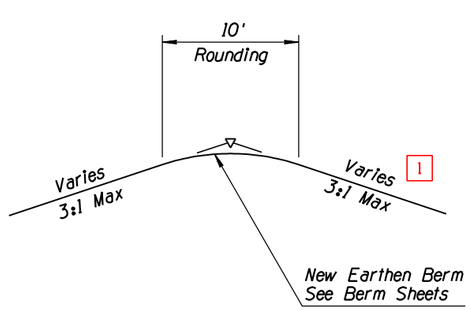

TYPICAL BERM SECTION

SURVEY NO.	FINISHED PLANS	REVISIONS	LOCATION	DATE

	NAME	DATE
DESIGN	T MACBETH	10-90
DRAWN	M HAUER	10-90
CHECKED	R DELANO	12-90
TEAM LEADER	J BRUBAKER	

ARIZONA DEPARTMENT OF TRANSPORTATION
HIGHWAYS DIVISION
HIGHWAY PLANS SERVICES

DESIGN SHEET
TYPICAL SECTIONS

ROUTE SR 101L
LOCATION PRICE, FIRST ST - BASELINE

SHEET 4 OF 5

TRACS NO. H0000 01 C

___ OF ___

STD P-02.53

ccccc DGNcSPECIFICATIONccccc
ccccc SYSTIMEccccc
VIEW NAME: