Table of Contents

CHAPTER 6: STRUCTURES

601 CONCRETE STRUCTURES
601-1 DESCRIPTION
601-2 MATERIALS
601-3 CONSTRUCTION REQUIREMENTS
601-3.01 FOUNDATIONS
601-3.02 FALSEWORK AND FORMS
601-3.03 PLACING CONCRETE
601-3.04 JOINTS IN MAJOR STRUCTURES
601-3.05 FINISHING CONCRETE
601-3.06 CURING CONCRETE
601-3.07 SUPPORTING, HANDLING, AND TRANSPORTING PRECAST CONCRETE ITEMS
601-3.08 BACKFILLING
601-3.09 VERTICAL RESTRAINERS
601-4 TESTS ON FINISHED STRUCTURES
601-4.02 DIMENSIONAL TOLERANCES
601-5 & 6 METHOD OF MEASUREMENT & BASIS OF PAYMENT

602 PRESTRESSED CONCRETE
602-1 DESCRIPTION
602-2 MATERIALS
602-3 CONSTRUCTION REQUIREMENTS
602-3.01 SHOP DRAWINGS
602-3.02 APPROVAL OF PRESTRESSING SYSTEMS
602-3.03 SAMPLING AND TESTING
602-3.05 DUCT INSTALLATION FOR POST-TENSIONED STRUCTURES
602-3.06 PRESTRESSING
602-3.07 GROUTING OF POST-TENSIONED MEMBERS
602-4 & 5 METHOD OF MEASUREMENT & BASIS OF PAYMENT

603 PILING
603-1 DESCRIPTION
603-2 MATERIALS
603-3 CONSTRUCTION REQUIREMENTS
603-3.03 EQUIPMENT
603-3.04 DRIVING PILES
603-3.05 PILE SPLICES
603-3.06 PILE CUTOFF (WASTE)
603-3.08 DETERMINATION OF BEARING VALUES
603-4 METHOD OF MEASUREMENT
603-4.01 FURNISHING PILES
603-4.02 DRIVING PILES
603-4.03 SPLICING PILES

604 STEEL STRUCTURES
604-1 DESCRIPTION
604-2 MATERIALS
604-2.01 STRUCTURAL STEEL
604-2.03 HIGH-STRENGTH BOLTS, NUTS AND WASHERS
604-2.10 CERTIFICATION OF STRUCTURAL STEEL
604-3 CONSTRUCTION REQUIREMENTS
604-3.01 SHOP AND WORKING DRAWINGS
604-3.04 SHOP INSPECTION
604-3.06 WELDING
604-3.08 ERECTION

605 STEEL REINFORCEMENT
605-1 DESCRIPTION
605-2 MATERIALS
605-3 CONSTRUCTION REQUIREMENTS
605-3.01 GENERAL
605-3.02 SPLICING AND LAPPING

605-3.03 EPOXY-COATED REINFORCEMENT
605-4 & 5 METHOD OF MEASUREMENT & BASIS OF PAYMENT

606 OVERHEAD SIGN STRUCTURES
606-2 MATERIALS
606-3 CONSTRUCTION REQUIREMENTS
606-3.05 FOUNDATIONS

607 ROADSIDE SIGN SUPPORTS

608 SIGN PANELS

609 DRILLED SHAFT FOUNDATIONS
609-1 DESCRIPTION
609-1.03 INSTALLATION PLAN
609-2 MATERIALS
609-2.01 CONCRETE
609-2.02 REINFORCING STEEL
609-3 CONSTRUCTION REQUIREMENTS
609-3.02 CONFIRMATION SHAFTS
609-3.03 EXCAVATION
609-3.04 DRILLING SLURRY
609-3.05 INTEGRITY TESTING
609-3.06 REINFORCING STEEL
609-3.07 CONCRETE PLACEMENT
609-3.08 CASING REMOVAL
609-4 & 5 METHOD OF MEASUREMENT & BASIS OF PAYMENT

610 PAINTING

REFERENCES AND ADDITIONAL INFORMATION

BLANK FORMS
PILING RECORD SUMMARY SHEET
DRILLED SHAFT INSPECTION REPORT
DRILLED SHAFT CONCRETE PLACEMENT CHART
GAMMA RAY SPREADSHEET

601 CONCRETE STRUCTURES

601-1 Description

A structure is an arrangement of materials that sustains loads. Loads can be the weight of an automobile, the force of the wind, or the pressure of soil and water. A structure must withstand loads without collapsing or deflecting excessively. A safe structure is one that can carry its intended loads without the risk of injury to the people using the structure.

Structures can be made up of different materials. For example, bridges can be built out of timber, steel or concrete. Sometimes these materials are combined to form composite structures where two or more materials share the loading.

The structures that ADOT builds are made primarily of structural steel or structural concrete.

Structural steel is a group of ASTM designated steels with material properties that are specifically intended for structural applications such as buildings and bridges. Structural steel is very different from the steel found in automobiles, washing machines, and hand tools. Structural steel is of higher grade, designed to have high strength, and stretches (or yields) just before failure as a warning to those in or near the structure.

Structural concrete is a composite material consisting of concrete and steel. It must meet higher standards of quality than concrete found in sidewalks or driveways. Like structural steel, it is designed to have a high strength and yield before failure.

Types of Structural Concrete

Structural concrete can be divided into two types: reinforced concrete and prestressed concrete.

Reinforced concrete consists of concrete and reinforcing steel. Concrete is strong in compression and weak in tension. Reinforcing steel is generally used to carry the tensile loads placed on a concrete structure. These tensile loads may be due to the bending of a concrete member such as a beam or due to shrinkage of the concrete itself. Reinforcing steel is used to help concrete carry compressive loads and shear stresses that develop when loads move through a structure.

Prestressed concrete is a mixture of concrete, reinforcing steel, and high strength steel wires or strands. The reinforcing steel serves the same purpose as in reinforced concrete. The steel wires, which are woven into steel strands, are designed to induce compressive loads in the concrete. By inducing compressive loads, the steel strands allow the structure to carry more tensile loads. In other words, before any portion of structure can go into tension, all the induced compression must be overcome first by the load. The steel strands can be either pretension or post-tensioned depending on whether the strands are tensioned before or after the concrete is placed in the structure.

Prestressed concrete requires less reinforcing steel since there is a smaller tensile stress developed in concrete. The result is thinner and lighter structural concrete members. The concept is further discussed in Section 602-1 of this manual.

Understanding Structures and the Importance of Inspection

Additional information on how structures perform and the materials used in them can be found in the references

listed at the end of this chapter. Inspectors and Project Supervisors assigned to inspect concrete structures should have some basic understanding on how these structures are intended to perform. Discussions with the Designer of a structure can go a long way to clarify why the Special Provisions for a structure are written the way they are and why the Project Plans contain various details, which on the surface, appear vague. If Inspectors and Resident Engineers understand how the various structural members (abutments, pier, girders, etc.) are designed to function, they are less likely to overlook key inspection areas.

The Department cannot over emphasize the importance of thorough and timely inspections on all concrete structures. Failures of concrete structures can lead to injury, death, and significant damage to both public and private property. The Inspector is the guardian of public safety in this respect and should carry out inspections with the appropriate care and due diligence. An Inspector's worst enemy on a structural concrete construction job is ignorance. Lack of knowledge in reading and interpreting bridge construction specifications and the inability to correctly read Project Plans and construction details will get Inspectors into serious trouble. Inspectors are encouraged to seek clarification with the Resident Engineer or Project Supervisor on specifications and details they do not understand.

Resident Engineers and Project Supervisors have a duty to assign well-trained and experienced Inspectors to structural concrete work. Inexperienced Inspectors should not be allowed to inspect and/or accept work without close supervision. The Resident Engineer or Project Supervisor should sit down with the Inspectors and review the Project Plans and specifications prior to construction. The Inspector should know how each structural member is to be built and designed to fit together as a whole

The Role of the Designer and ADOT Bridge Group

During construction, the Designer of a structure, whether it be a Consultant Engineer or one of ADOT's own bridge design teams, will deal with questions regarding plan clarifications, shop and working drawing reviews, and routine construction problems involving design details. The ADOT Bridge Group develops design and construction policies for bridges and other major structures. Policy and procedural changes related to bridge construction and bridge construction specifications must be cleared through the Bridge Group regardless of who designed the structure

The Bridge Project Engineer

ADOT Bridge Group assigns a Bridge Project Engineer to each project who is available to answer any questions Resident Engineers or Project Supervisors may have about any aspect of the bridge construction. This is a valuable resource that the Department encourages the field staff to use.

Major construction problems, significant design and specification changes should be discussed with the Bridge Project Engineer regardless of who designed the structure. A memo is issued by the Bridge Group at the beginning of each project indicating which Bridge Project Engineer will provide technical assistance during construction. Sections 14 and 18 of the Bridge Design and Detailing Manual more fully describe the Bridge Group's and the Bridge Project Engineer's role during construction.

Minor Structures versus Major Structures

Section 101.02 of the Standard Specifications define what ADOT calls a *structure*. The intent is that anything that sustains a load is called a structure. This could be a buried pipe that carries soil loads from above or a catch basin that holds the weight of water within it. This distinction is important since certain specifications (for example Sections 202, 203, and 601) require the Contractor to do certain things when working around a

structure. Subsection 601-1 further subdivides structures into two main groups: *Minor structures* are small easy-to-install structures that can be either precast or cast-in-place. *Major structures* are the larger heavier structures that are usually cast-in-place, but can be precast. The following table lists the most common minor and major structures:

Minor Structures	Major Structures
Cattle guards	Box culverts
Catch basins	Bridges and bridge members
Barrier wall	Walls
Headwalls	Slabs
Manholes and manhole risers	
Utility vaults and pull boxes	

Although concrete pipe is considered a structure and can be precast, it actually falls under the 501 specification.

Other Specifications Related to Concrete Structures

Section 601 and 602 of the Standard Specifications do not encompass all aspects of structural concrete construction. In fact Inspectors should frequently refer to other sections of the Standard Specifications and Special Provisions. In addition to the component materials of structural concrete (such as cement, sand, water, and fly ash), structural concrete has many related materials such as reinforcing steel, joint materials, bearing pads, and prestressing strand that become integral parts of the structure. Relevant Standard Specifications sections include:

Subsection 109.10 - Lump Sum Payment for Structures
Subsection 202–3.04 - Removal of Miscellaneous Concrete
Subsection 203-5 - Structural Excavation and Structure Backfill
Section 605 - Steel Reinforcement
Section 1003 - Reinforcing Steel
Section 1006 - Portland Cement Concrete
Section 1011 - Joint Materials
Section 1013 - Bearing Pads

601-2 Materials

Structural concrete uses many related materials, each with its own set of specifications. This often makes structural concrete inspection tedious since Inspectors must refer to and from the various specifications. It emphasizes the point that Inspectors must be experienced at structural concrete inspection and be thoroughly familiar with how various materials are used and where to find their specifications.

The following table summarizes all the materials used in concrete structures and lists where to find the installation and material requirements in the Standard Specifications. The Project Plans and Special Provisions should be consulted first when researching specification requirements for each material.

Material	Installation Specifications	Material Specifications
Concrete		
In general	601, 1006	1006
Cement		1006-2.01, ASTM C150
Water		1006-2.02 AASHTO T 26
Fine Aggregate		1006-2.03(B), AASHTO M 6
Coarse Aggregate		1006-2.03(C), AASHTO M 43
Admixtures		1006-2.04, AASHTO M 154 & M 194, ADOT's Approved Products List
Fly Ash		1006-2.04 (D), ASTM C618 & C311
Related Materials		
Reinforcing Steel	605, 601-4.02(B)	1003, AASHTO M 31 (ASTM 615)
Tie Wire	605-3.01	1003-3, AASHTO M 32
Form Ties	601-3.05(B) (for finishing)	None
Precast Mortar blocks	605-3.01	Same 28 day strength as surrounding concrete when blocks sampled and tested, Arizona Test Method 315
Chairs and Bar Supports	605-3.01	None
Mechanical Couplers	605-3.02, manufacturer's recommendations	605-3.02, ADOT's Approved Products List
Welds	605-3.02, 605-3.01(B)(3)(d) ANSI/AASHTO/AWS D1.5-88	604-3.06 ANSI/AASHTO/AWS D1.5-88
Welded wire fabric	605	1003-4, AASHTO M 55
Epoxy-Coated Reinforcing Steel	605-3.03	1003-5
Steel Plates and Bars	Project Plans or shop drawings, 601-4.02	1004, ASTM A 36 or A 588
Galvanizing when exposed:	601-3.04(B)(3)(f)	ASTM A123 and A125

Material	Installation Specifications	Material Specifications
Bolts: Nuts and Washers:	Project Plans or shop drawings	601-3.04(B)(3)(f), 604-2.03, 606-2.05, or 731-2.02(G), otherwise for bolts ASTM A325, nuts and washers ASTM A563 Exposed parts are galvanized
Prestressing Steel -Wire: -Strand: -Bars:	602-3.06, 601-4.02	602-2.01 AASHTO M 204 AASHTO M 203 AASHTO M 275
Post-Tensioning Ducts	Approved shop drawings, 602-3.05, 601-4.02	602-2.02
Post-Tensioning Hardware & Anchorages	Approved shop drawings, 602-3.04	See steel plates and bars -Bars may be designated AASHTO M 275
Post-Tensioning grout	602-3.07	602-2.03, 1006-2.01
Styrofoam	Project Plans	
Hardboard	Project Plans	
Bearing Pads	1013	1013
Vertical Restrainer - Tempered hardboard: - Expanded Polystyrene:	601-3.09	601-3.09(B), ASTM A603 601-3.09(B), ANSI/AHA Std. A135.4, Fed Spec LLL-B-810 601-3.09(B), ASTM C 203
Joint Materials	601-3.04, see Project Plans and Special Provisions	1011
Water Stops	601-3.04(C)	1011-1
Curing Compound	1006-6.01(C)	1006-2.05, AASHTO M 148, ADOT's Approved Products List
Patching Mortar	601-3.05	601-3.05(B), 1016, 1017, ADOT's Approved Products List
Non-shrink Grout	1017-3	1017-1, 2, & 4 and ADOT's Approved Products List
Epoxies and Adhesives	Project Plans or Special Provisions,601-3.04(B)(3)(g), 601-3.05(B) & 3.09(B), 605-3.04, 1101-5.01	1015, ADOT's Approved Products List
Concrete Stain and Paint	Special Provisions	Special Provisions, ADOT's Approved Products List
Conduit	732-3.01	732-2.02
Pull Boxes	Special Provisions or Project Plans	732-2.04
Grounding Wire	Special Provisions or Project Plans	Special Provisions or Project Plans
Structure Backfill	203-5, Standard Drawing B-19.40 & 19.50	203-5.03(B)
Geocomposites	203-5.02(A) & (B)	1014

Precast Units

When the Contractor chooses to use precast units for minor structures, the Project Supervisor or Lead Inspector should ensure that the units come from manufacturers listed in the project Special Provisions. Only precast units that bear an ADOT stamp shall be allowed for use on the project.

601-3 Construction Requirements

601-3.01 Foundations

There are three different types of foundations for major concrete structures:

1. *Spread footings* consist of a cast-in-place reinforced concrete pad that is poured on the subgrade soil. The pad spreads the load carried by the structure so as not to exceed the bearing capacity of the soil. The construction of spread footings must also meet the requirements of a concrete structure as specified in Section 601.

2. *Piling* (driven piles) are long, H-shaped, structural steel sections driven vertically into the ground much like a nail is hammered into a piece of wood. The piles are spaced only a few feet (meters) apart and are driven to depths of up to 65 feet (20 meters). A reinforced concrete cap is usually poured on top of each group of piles. The cap transfers loads from the structure to the piles. The piles transfer the load to soil through end bearing and friction between the soil and the pile. The specifications for piling are found in Section 603.

3. *Drilled shafts* are designed to behave much in the same way as piles. Both rely on friction between the soil and the pile or shaft to support the structure. Drilled shafts are constructed by drilling a deep vertical hole in the ground and filling it with reinforced concrete. Drilled shafts are used in highly cemented soils or soils with large boulders that would make drive piling difficult to nearly impossible. The specifications for drilled shafts are found in Section 609.

Foundation Inspection

The most important thing an Inspector can do when inspecting foundations is to ensure that the foundation is placed on the same soils as shown in the Project Plans. <u>This means comparing the soils encountered in the field with the soils descriptions shown in the boring logs contained in the Project Plans.</u>

For example, if an Inspector encounters hard clay of low PI where the bottom of a spread footing is to be located, the Inspector should check the boring logs in the Project Plans to ensure that indeed this is the soil shown. If it is not, he or she should bring this discrepancy to the attention of the Resident Engineer; who should contact the Designer. Even if a soil appears firm and stable, the wrong type of soil can adversely affect the long-term settlement and load transfer characteristics of the structure.

The same process of soil identification and comparison should be done for drilled shafts using the auger trimmings as a means of soil sampling and identification.

Approving Foundation Subgrades

Spread footings should not be placed on soft yielding soils even if this is the same soil shown on the Project Plans. Contact the Designer to verify that the soil conditions in the field are the same as they anticipated during their design. When bedrock or highly fractured decomposed rock is encountered, a Geologist retained by the

Designer should be consulted to ensure the geologic conditions are the same as anticipated. This may involve a site visit by both the Designer and Geologist to verify site conditions. The Inspector should document their visits and any instructions to the Department that will be carried out by the Contractor.

The Resident Engineer or the Project Supervisor should approve each foundation subgrade before any work begins. This approval should include a personal inspection of the foundation subgrade by the Resident Engineer or Project Supervisor.

Structural Excavation and Dewatering

Subsection 203-5 of the Standard Specifications and Standard Drawings B-19.30, 19.40, and 19.50 describe the requirements for structural excavation and structure backfill. See Subsections 601-3.07 and 203-5 of this manual for further information. In foundation work where water is present, the water should be pumped out before concrete is placed. When water is pumped out of the forms during the placement of concrete, the pump inlet should be in a sump outside the forms. Drainage of the forms should be arranged so that no water will be flowing through the forms.

The concrete should not be shoveled or pulled through the water. If it is not possible to remove the water completely, the placement of concrete should begin at one end by means of a tremie, bringing the concrete above the water. The water should be forced ahead of the concrete mass by placing the concrete with as little disturbance as possible, using moderate vibration to settle the leading edge. Additional cement may be needed in the concrete mix when placing it under water. Check with the Designer.

601-3.02 Falsework and Forms

(A) Design and Drawings

Resident Engineers, Project Supervisors, and Inspectors who oversee structural concrete construction must clearly understand the differences between falsework and forms (or formwork). The second and third paragraphs of Subsection 601-3.02(A) define both.

Forms (or *formwork*) simply contain the concrete and give it shape. Fresh concrete behaves like a fluid and forms contain the concrete until it has time to harden. The forms resist the lateral fluid pressure fresh concrete exerts on its container. Forms give shape to the concrete until it hardens and can be used to provide a desired surface texture like rustication.

Falsework does not contain concrete. It holds up concrete until it has enough strength to support itself. When concrete is suspended in the air, falsework is used to carry the vertical loads induced by both the weight of the fresh concrete and any formwork used to contain the concrete.

In the simplest of terms, falsework holds it up and formwork holds it in. The best way to visualize the difference is to think of a water tower. The tank at the top of the water tower contains the water. It is the formwork. Its only job is to hold the water without leaking. The tower itself is the falsework. It holds up both the tank and the water in the air.

Exhibit 601-3.02-1 shows the formwork for a wall. Note that the wall is sitting on the ground on top of a footing. The vertical load (weight of the fresh concrete) is supported by the footing that rests on the ground. This structure has no falsework. It would be like the tank from a water tower sitting on the ground.

Exhibit 601-3.02-1 shows the typical components of falsework. You might see this type of falsework under a cast-in-place box girder bridge or slab bridge. Concrete is usually placed directly on top of the plywood sheathing. The sheathing contains the concrete (keeps it from spilling to the ground) and supports the concrete by transferring its weight to the joists. In this case, the sheathing acts as both formwork and falsework. The joists transfer the weight of the concrete (and the sheathing) to the stringers. The stringers transfer their loads to the vertical shores until the loads reach the mudsills, which in turn, pass all the loads to the ground.

Inspectors and Resident Engineers often confuse formwork with the falsework. The following are examples of formwork and falsework:

Formwork:

- catch basins and manholes;
- abutment walls and spread footings;
- retaining and noise walls (regardless of height);
- pier columns (both vertical and curved);
- box culvert bottom slabs and side walls; and
- interior cast-in-place girders.

Falsework:

- bridge decks (only the sheathing acts as formwork and falsework);
- deck overhangs (only the sheathing acts as formwork and falsework);
- exterior cast-in-place girders;
- pier caps (cap beams);
- abutment wing walls with sloping bases;
- box culvert top slabs;
- shoring systems for cast-in-place box girder bridges; and
- soffit fills.

Drawings and calculations must be submitted by the Contractor for all falsework on the project in accordance with Subsections 601-3.02(A) and 105.03. Exhibit 601-3.02-2a and 601-3.02-2b are examples of falsework drawings for a bridge superstructure. The falsework is a combination of steel and timber members that is typical for most bridge falsework. The stringer, joists and cap beams are steel I-beams, while the shores, decking, bracing, corbels, sills and wedges are timber.

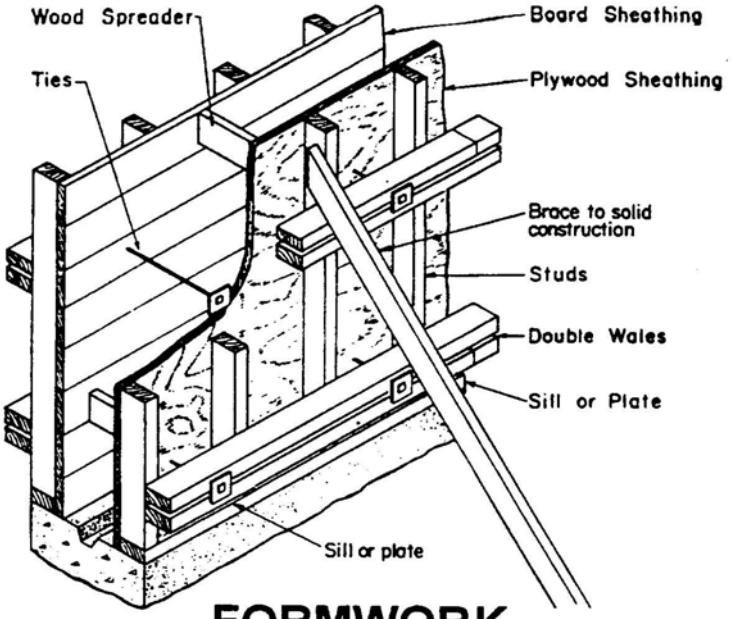

FORMWORK

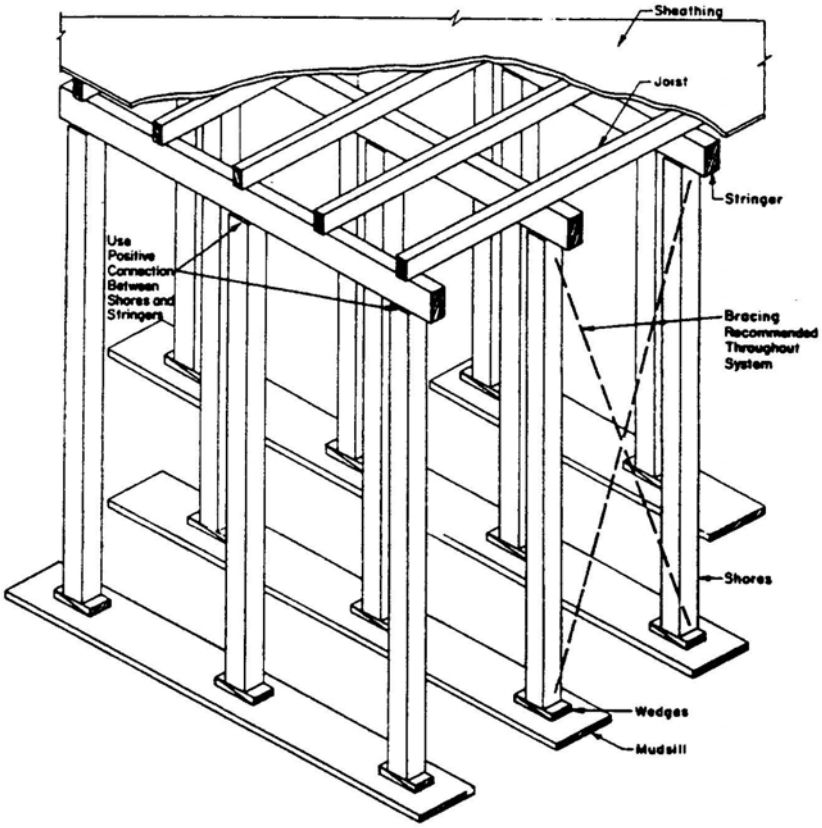

FALSEWORK

Exhibit 601-3.02-1 Formwork and Falsework

Falsework designs must bear the seal of a Professional Engineer registered in Arizona. This includes shoring systems supplied by out-of-state manufacturers. A few exceptions are:

- all minor structures;
- the top slabs for box culverts less than or equal to 12 feet (3.6 meters) wide; and
- abutment wing walls with sloping bases.

Falsework drawings and calculations shall be submitted to the Designer of the structure for review and approval. Before submitting these documents to the Designer, the Resident Engineer should check for:

- five sets of drawings and calculations;
- legible drawings and calculations sealed by a Professional Engineer registered in Arizona; and
- correct drawing size and border requirements including a blank space on the drawing for approval stamping.

See Subsection 105.03 for further information. A reproducible set of falsework drawings is not required unless requested by Bridge Group.

The design and detailing requirements for falsework are listed in Subsection 601-3.02(A). The Resident Engineer may want to review the submitted drawings and calculations for general conformance to this subsection before submitting them to the Designer. The Resident Engineer may choose to review and approve falsework plans for very simple structures where there is no doubt as to the adequacy of the falsework.

On railroad grade separation structures, a copy of the falsework plans must be sent to the Railroad Company's Engineering Department for approval. The railroad companies need long lead times for review and approval.

ADOT's falsework policy can be found in Subsection 1.8.3 of the *Bridge Design and Detailing Manual* that describes some of the geometric and clearance tolerances of falsework.

Other Submittals

On precast girder bridges, the Contractor shall submit survey data for each precast girder showing the elevation at each tenth point along the top of the girder after it has been set on the bridge. In addition, data collected on camber and camber growth at the fabrication yard should be submitted (see Project Plans and Subsection 602-3.06(A) of this manual). This information must be submitted and reviewed prior to deck forming. The Project Supervisor shall forward this information to the Designer.

The Designer will check to ensure that the girders do not encroach into the deck slab due to excessive camber. Sometimes adjustments to the deck profile or girder bearing seats are needed to maintain a minimum deck thickness between each girder. If the deck forms and reinforcing steel are already in place, these adjustments could become very time consuming and costly. It is a good practice to check the elevations on top of the girders ahead of time and make any field adjustments if necessary.

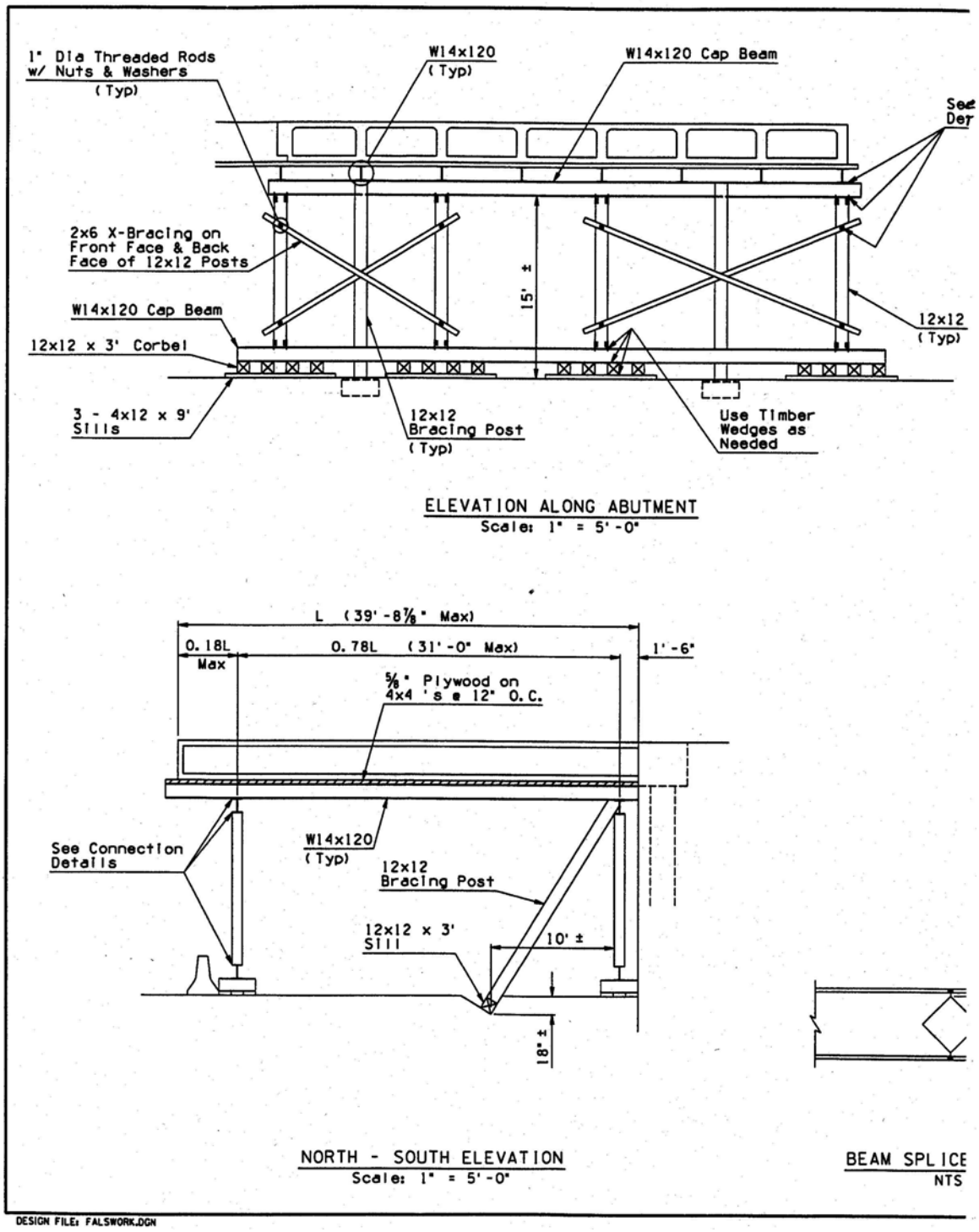

Exhibit 601-3.02-2a Falsework Drawings

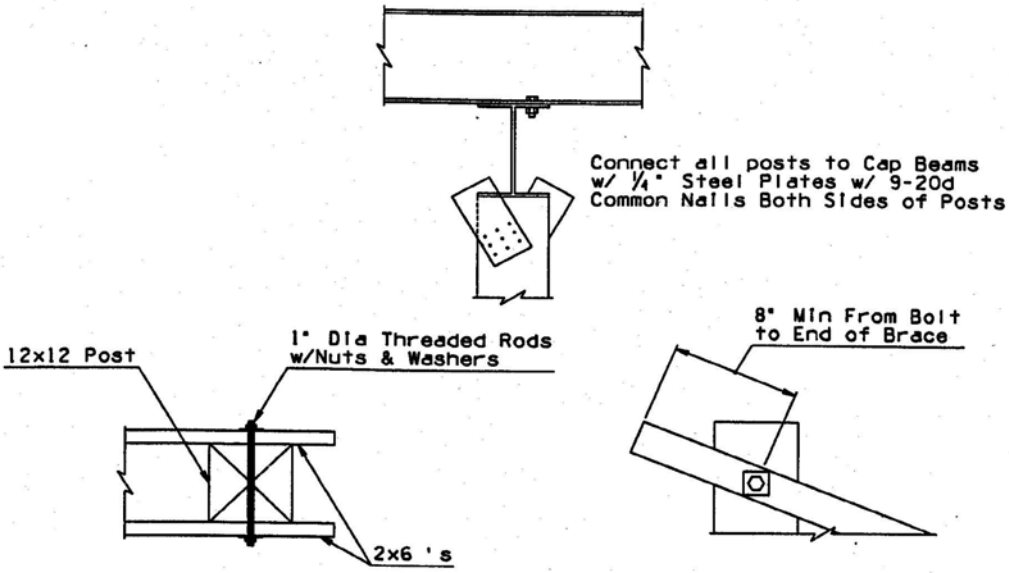

TYPICAL TIMBER CONNECTIONS

NTS

NOTES:

1. Construction specification - Arizona Department of Transportation Standard Specifications for Road and Bridge Construction, Edition of 1990.
2. Materials:

   ⅝" Plywood - APA Exterior-type STR I
   4x4 Dimension Lumber - Douglas Fir-Larch No. 2
   2x6 Dimension Lumber - Douglas Fir-Larch No. 1
   12x12 Dimension Lumber Post - Douglas Fir-Larch No. 1
   Structural Steel - ASTM A36

3. Soil Allowable Bearing Stresses are assumed to be 3000 psf on natural and field compacted materials.
4. All materials shall be in new or good condition.
5. Members shall be nailed, bolted, clamped, or welded where slippage is possible.
6. All steel members must be connected by means of welds and/or bolts. Use ⅝" ø A325 bolt or 3" long ¼" fillet weld.
7. For beam splice, use complete-penetration groove weld butt joints on the flanges. Use weld plates on both sides of the web. Each weld plate shall be ½ the thickness of the beam web. Apply a fillet weld all around each plate the thickness of the plate.
8. All electrodes shall be E70xx, and all welding is to be done by a certified welder.
9. The deflections of all beams are limited to L/270.
10. No changes are permitted without the Engineer's approval.

	NAME	DATE
DESIGN	YC	05/99
DRAWN	TST	05/99
CHECKED	KTD	05/99

ENTRANCO

RAMP SHORING

ROUTE	MP POST	STRUCTURE NO.
I-17	-	-

DWG. NO. -

Registered Professional Engineer (Structural) CERTIFICATE NO. [redacted] Date Signed [redacted] ARIZONA, U.S.A.

Exhibit 601-3.02-2b Falsework Drawings

Formwork drawings and calculations are required for the cast-in-place girders (webs) on box girder bridges (see Subsection 601-3.02[C]). These drawings shall go through the same submittal and review process as falsework drawings. As a minimum, formwork plans should include:

- type, sizes, and grade of materials used for form ties, spreaders, sheathing, studs, wales, and braces;
- formwork layout drawings including spacing of ties, studs, wales and braces;
- connection details;
- assumed concrete pressure distribution, rate of concrete placement, concrete temperature, and height of concrete drop into the formwork;
- allowable capacities of form ties and anchors and their calculated factors of safety; and
- design stresses, deflections, and allowable capacities for the individual formwork members, including braces, in accordance with Subsection 601-3.02(A).

The girder webs are the most important structural concrete members for cast-in-place box-girder bridges. In the past, the Department has experienced form blowouts and significant lateral movement of the forms due to inadequate bracing. This can result in significant deviations in girder alignment that can over-stress the girder webs and cause significant friction loss in the post-tensioning cables. Formwork drawings are intended to assist the Contractor in developing a well thought-out plan and avoid unforeseen problems during the concrete pours of these very important (and difficult to repair) bridge members.

See Subsection 601-3.02(C) of this manual for further information on formwork.

(B) Falsework Construction

Once falsework drawings have been reviewed and approved, the Resident Engineer or Project Supervisor should distribute copies to the Inspectors. Inspectors should oversee the falsework construction and inspect the work to eliminate obvious defects and safety hazards. Falsework failures and collapses are not uncommon. Common causes include:

- inadequate bracing;
- lack of attention to falsework details during erection;
- using inferior materials compared to what is specified;
- shores or vertical members not plumb;
- unstable soils under mudsills;
- vibration due to construction traffic or concrete placement;
- inadequate control of concrete placement (pouring too fast or loading the structure unevenly); and
- improper stripping and shore removal.

Keep these reasons in mind as you observe the Contractor erect and remove falsework. Even though the Contractor will have a Professional Engineer certify the falsework construction, it is still necessary for the Inspector to observe the work and ensure the falsework is erected correctly without large amounts of rework. The Contractor is still ultimately responsible. Any rework to correct deficiencies or a failure that shuts down the project benefits no one and causes a lot of unnecessary aggravation. Additional conditions that should be monitored are as follows

Footings and Mudsills

- Soil type is the same as identified in the approved falsework drawings.
- Soil is firm, stable, and has uniform contact under the mudsill.

- Top surface of the mudsill or footing is level.
- Mudsill and/or footings are protected from wash-out or undermining with proper surrounding drainage.
- Mudsill or footing are set back reasonably far enough from the edge or toe of slopes.

Piling (when used)

- Piles are placed within specified driving tolerances.
- Piles are driven to the allowable bearing values.
- Pile caps are properly set and level to ensure uniform bearing over the pile group.

Timber Falsework Members

- Timber is free of noticeable defects for the grade specified (splits, open knots, rots, and cuts).
- Timber appears well seasoned so warping and shrinkage will be minimal.
- All members are in full contact with each other.
- Size, spacing, length, and grade of members are the same as shown in approved drawings.
- Diagonal bracing is installed as per drawings.
- Connections are checked for tightness with no loose hardware.
- Vertical members are plumb and horizontal members are level.
- Camber is provided when required to offset dead load deflections.
- Full bearing connections are examined for crushing.

Only double wedges shall be used between the mudsill and the supporting posts (see Exhibit 601-3.02-3). The wedges must be kept tight and placed so that there will be no eccentric loading. They should be examined frequently during the placement of concrete in the deck and adjusted when necessary to conform to design elevations of the deck floor. Wedges should not be stacked more than two high. If two wedges will not serve the purpose, a longer vertical member is needed.

Structural Steel Falsework Members

- Salvaged beams and other steel shapes are examined for section loss, web penetrations, rivet, or bolt holes, and local deformation that could affect the member's load carrying capacity.
- Column or pile bents are set plumb and beams are placed level.
- Member size and spacing in conformance with the shop drawings.
- Bracing is installed per drawings, especially where called out on beam compression flanges.
- Bolted connections are sufficiently tightened with the proper number of bolts.
- Welded connections are done to prescribed standards by a certified welder (see Subsection 604-3.06 of this manual).
- Splices are located only at locations shown in the drawings.
- Allowances made for jacking the bridge structure for members are located under a hinge (see Project Plans and Subsection 601-3.04 of this manual).

Manufactured Steel Shoring Assemblies

- Manufactured shoring system is in full compliance with manufacturer's recommended usage.
- Base plates, shore heads, extensions, or adjusting screw legs are in firm contact with the foundation or support.
- Shoring tower assemblies are set to the correct spacing.

- Cross-bracing is in conformance with the drawings, including frame-to-frame braces and tower-to-tower braces.
- Screw leg extensions are within the allowable limits or adequately cross-braced, and snug to tower frame.
- Tower frames are checked for plumbness.
- Top U-heads are in full contact with the joist or ledge, and hardwood wedges are snug.
- Frames are examined for section loss, kinks, broken weld connections, damaged cross-bracing lugs, or bent members.
- Loads on shore heads are applied concentrically, and not eccentrically.
- All locking devices are in the closed position.
- Guy wires are adequately attached to towers and ground support.
- Allowances are made for jacking the bridge structure for members located under a hinge (see Project Plans and Subsection 601-3.04 of this manual).

Falsework Protection

- Barriers and crash attenuators are placed in correct locations, lengths, and numbers.
- Warning and clearance signs are up.
- Safety (banger) beams (if required) are set at the correct height and offset distance from the structure. The ADOT Traffic Operations Center, the District Permit Office, and local government officials (fire, traffic, and community relations) are notified of low clearance.
- Horizontal clearances are maintained between shores and barrier.
- Falsework members adjacent to barriers are properly bolted or mechanically connected (see Subsection 601-3.02(A) and approved drawings).
- Falsework bracing and bolted joint connections are installed as the falsework is going up and not left until the entire structure is completed.
- Lane widths are correct under the falsework.
- Signing, striping, barrier, and barricades are set in accordance with approved traffic control plans.

Construction personnel are reminded that the lower clearances over traffic, caused by the falsework, will necessitate early warning signs, possible detours, and notification of the District Permits Supervisor so that loads exceeding 14.5 feet (4.45 meters) may be warned and rerouted. An Inspector should verify the height of falsework over traffic openings and record the measurements in their daily diary.

AASHTO's Construction Handbook for Bridge Temporary Works is an excellent reference guide for Resident Engineers and Project Supervisors who oversee falsework construction.

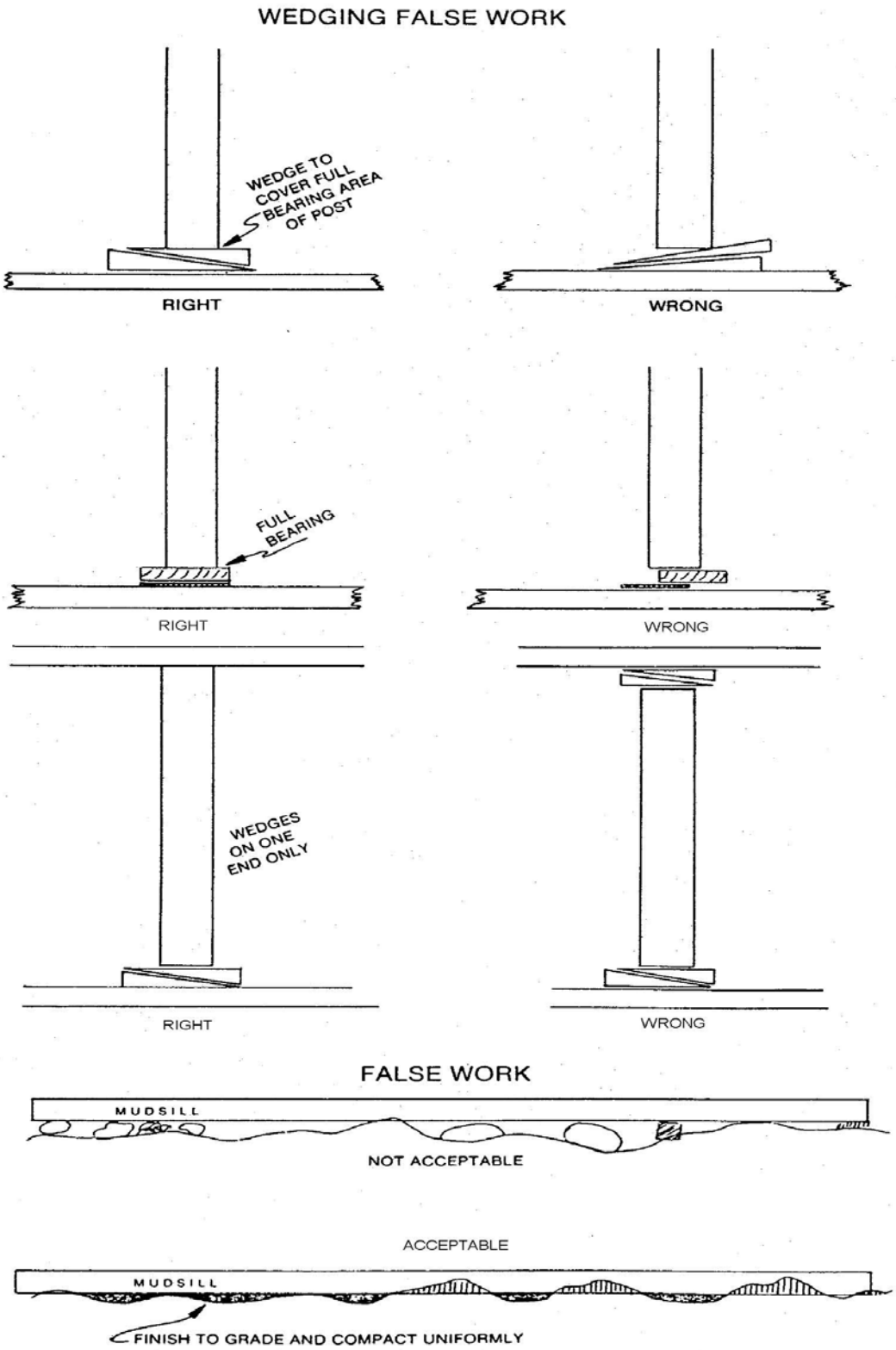

Exhibit 601-3.02-3 Falsework Foundations

Pour Certificate

The Contractor's Engineer shall provide a pour certificate certifying that all falsework has been constructed according to the approved drawings. This *pour certificate* can take the form of a letter bearing the signature and seal of the Engineer with a statement that the erected falsework was in accordance with the approved falsework drawings. Do not allow the Contractor to place concrete in any forms above falsework until you have received the Engineer's pour certificate (a fax is OK).

Setting the Falsework Accurately

Inspectors and Contractors often overlook the importance of setting falsework. The elevation, slope, cross fall, and shape of the entire structure is based on how accurately the falsework is placed. Carpenters use the falsework decking or waste slab as a reference for sizing all their formwork for each structural member and ironworkers use it to set their bar supports for reinforcing steel in the beam and deck slabs.

Tolerances for falsework decking are based on Subsection 601-4.02(A)(2). Since the falsework decking is used as the bottom form for slabs, girders and beams, the decking has a – 1/8 inch to +1/4 inch (-3 mm to +6 mm) elevation tolerance everywhere on its surface. Wedges and screw jacks are used to help meet these tolerances. The Inspector should have the Contractor's survey crew verify that the falsework has been set to this accuracy. Some allowances are made by the Contractor (usually in the falsework drawings) for falsework settlement and joint crush. Camber is added to account for dead load deflections once the structure is poured.

Soffit Fills and Waste Slabs

One method for constructing a cast-in-place box girder bridge is to cast the bridge piers and abutments first. The area between the piers and abutments is filled with dirt. A thin concrete slab, called a *waste slab*, is poured on top of this dirt. The waste slab acts as the bottom form for the bridge superstructure while the dirt, called a *soffit fill*, acts as the falsework.

Working drawings, similar to falsework, must be submitted by the Contractor (see Subsection 601-3.02[A]) for soffit fill and waste slab construction. Information should include:

- the soil type;
- fill placement and compaction methods;
- compaction densities to be achieved;
- fine grading methods;
- grade control for the waste slab;
- placement and finishing methods for the waste slab;
- waste slab thickness and strength; and
- quality control and repair procedures for out of tolerance areas.

Although the soffit fill and waste slab are temporary, the Contractor must construct both to very close tolerances. Like falsework decking, the waste slab is used as a reference for constructing the entire bridge superstructure (see the previous discussion on setting falsework accurately).

Subsection 601-3.02(C)(3) requires a ±1/4 inch (6 mm) tolerance on the waste slab for both grade and smoothness. The soffit fill should be constructed to similar tolerances.

There are no thickness or strength requirements for waste slabs. Typically Contractors will pour a slab 2.5 inches (60 mm) thick with 2500 psi (20 MPa) concrete. However waste slabs must meet the requirements of 601-3.05(A) since they are the formed surface for the bottom slab of the bridge. Severe cracking and faulting at the cracks are cause for rejecting the waste slab. The intent is to have a waste slab that presents "a pleasing appearance of uniform color and texture commonly achieved by the use of clean smooth plywood forms." This is the standard that Inspectors must use to gauge the appearance of waste slabs.

Verify the waste slab is carefully surveyed. It should be checked with a straight edge before any forming or ironwork proceeds. It is very important for the Inspector to work closely with the Contractor to ensure both the soffit fill and waste slab are built correctly. Other requirements for waste slabs can be found in Subsections 601-3.03(A) and 1006-5.01, which refer to slab requirements in general.

Telltales

Some type of telltales should be provided by the Contractor to indicate the amount of settlement occurring during the placement of deck and pier cap concrete. Telltales are usually firmly attached to the bottom of the forms at various locations and are extended to a reference mark, easily observed by a person positioned under the structure. A reference mark is placed on a stake driven firmly into the ground. The telltale and the ground reference provide a direct indication of falsework movement that can be checked against the calculated deflection. Maximum allowable deflections (vertically and horizontally) are 1/240th of the unsupported span of the falsework. For example, plywood forms spanning 68 inches (1.73 meters) between girders should only deflect to a maximum of 1/4 inch (7 mm).

It is important for Inspectors to enforce maximum deflection requirements. Excessive falsework deflections can:

- result in structural members that sag and end up below the desired finished elevation;
- produce unsightly bulging in the hardened concrete;
- add more weight to the structure than anticipated by the Designer; and
- result in significant concrete quantity overruns.

Safety

Bridge construction continues to be one of the most dangerous activities in public works construction. Some of the hazards are obvious, such as the risk of falling, while others are not (i.e., the overturning of a crane). OSHA has numerous safety standards related to concrete construction (Subpart Q is the main one). These standards apply both to the Contractor and ADOT's field staff. The standards specifically related to bridge and concrete work include:

Description	Standards
Fall Protection	Subpart M
Safety Belts, Lines and Lanyards	1926.104
Safety Nets	1926.105
Working over Water	1926.106
Formwork and Falsework	1926.703
Concrete Equipment	1926.702
Cranes	1926.550
Masonry Walls	1926.706
Illumination	1926.26, 1926.56
Fire Protection	1926.24 & Subpart F
Housekeeping	1926.25, 1910.176
Personal Protective Equipment	1926.28
Foot Protection	1910.136
Head Protection	1926.100
Eye and Face Protection	1926.102
Signaling	1926.201
Slings	1910.84
Hand Tools and Jacks	Subpart I
Scaffolding	Subpart L
Pile Driving	1926.603
Demolition	Subpart T
Ladders and Stairways	Subpart X

This is not a complete listing. It is meant to point some of the key safety standards you should be aware of when working in and around any structure under construction.

The Resident Engineer or Project Supervisor has a duty to meet with the Inspectors during each phase of bridge construction and discuss safety procedures. As a minimum, the Inspectors should be made aware of:

- tripping, falling, and impalement hazards;
- when fall protection equipment will be required;
- how to obtain and how to use fall protection equipment;
- safety procedures around heavy equipment, especially cranes;
- procedures for climbing formwork and falsework;
- standards for hand rails, ladders, stairways, platforms and when they are required;
- required personal protective equipment such as hard hat, safety shoes, eye and ear protection, etc.; and
- procedures for reporting accidents and near misses.

An important new OSHA provision applies to fall protection when erecting formwork or falsework 1.8 meters (6 feet) above the ground. It also applies to setting of precast girders. OSHA Standards 1926.501 and 1926.502(k) require the Contractor to implement a fall protection plan and safety monitoring system for work where it is not feasible to use handrails, safety nets, or personal fall arrest systems (belts and lanyards). Inspectors need to be aware of the procedures involved in this fall protection plan since it applies to them as well

(C) Forms Construction

In forming concrete, the Contractor's objective is to obtain the maximum reuse of forms and to use standard material sizes with a minimum of cutting and fitting. The appearance of finished concrete is largely controlled by the condition of the form facing, the accuracy of the carpentry, the strength of the forms, and the adequacy of the bracing or falsework. There is a trade-off between form reuse and appearance. Maximizing form reuse also maximizes the amount of pointing and patching done after the forms are removed which detracts from the appearance. Inspectors and concrete foremen should agree ahead of time when formwork has reached a condition that is no longer acceptable. The following information in this subsection is intended to provide the Inspector guidance in this area

Form Appearance and Mortar Tightness

Generally the Contractor is not required to submit forming plans to the Department for review. The exception is girder webs on box-girder bridges (see Subsection 601-3.02(C)(1) of the Standard Specifications and Subsection 601-3.02(A) of this manual). On more complicated structural elements, the Contractor may develop a set of forming plans for internal use to minimize the amount of forming materials used. The Resident Engineer and Inspectors should meet with the Contractor's concrete foreperson ahead of time to answer questions about formwork requirements and discuss the levels of workmanship and concrete appearance acceptable to the Department. Once the Contractor has ordered the forming materials, it will be much more difficult to change forming procedures.

Mortar tightness is often an issue that comes up between an Inspector and a foreperson. This is due to the fact that carpenters try to make the same size form fit as many different spaces as possible. Mortar tightness is not the same as water tightness and depends on the slump of the concrete, its temperature, the amount of vibration the concrete receives, and the amount of fluid pressure it exerts against the form. A foreperson and the

Inspector will have different opinions on what is mortar tight. These differences should be resolved ahead of time before the first form is placed. Inspectors need to insist on mortar tightness for the following reasons:

- Leaking mortar can cause voids around the rebar next to the leak.
- Leaking mortar results in an uneven appearance of the concrete surface including dark form lines.
- Loss of mortar weakens the concrete in the area near the leak.
- Mortar is considered a pollutant and must be kept out of all washes and rivers.
- Mortar that leaks into internal cells of box girders and beams will add dead load to bridge.

Applying tape or strips of tin over form joints is preferred to using backer rod. Backer rod often becomes loose and allows mortar to flow when the concrete is vibrated. Form joints are most prone to leaking during concrete vibration. Do not allow the Contractor to cut back on vibration in an effort to reduce form leakage.

The Standard Specifications describe the requirements for concrete forms. There are general requirements that apply to all types of forms. There are special requirements for wood forms as well as for metal, fiberglass, and other types of forms. Metal and fiberglass forms must meet all the requirements specified for wood forms.

When inspecting formwork, the Inspector should be concerned with these three outcomes:

1. Can the forms safely hold the concrete without shifting, leaking, falling apart or deflecting excessively?

2. Will the forms give the correct shape and dimensions to the hardened concrete, including the correct elevation and location?

3. Will the surface of the concrete have the desired appearance?

More detailed information on inspecting formwork can be found in ADOT's training manuals as well as in the references cited at the end of this chapter.

Form Finish

The formwork specifications regarding the appearance of the hardened concrete often cause the most difficulty for Inspectors and the Contractor's carpentry staff. Formed concrete surfaces require either a Class I or Class II finish. See Subsection 601-3.05 of this manual and the Standard Specifications for further details on these finishes.

Questions often arise as to how many imperfections, patches, openings, and other defects in the Contractor's forms are needed to cause a rejection on the Department's behalf. To answer these questions, the Department has published the *Concrete Finish Reference Manual*. Inspectors should refer to this manual when inspecting formwork to anticipate any problems the Contractor's forms may cause with the desired finish.

Forms have been rejected for not producing an acceptable finish in accordance with the *Concrete Finish Reference Manual*. If there was any doubt that the Contractor's forms would not produce the desired finish, Resident Engineers have used the reference manual's guidelines instead of complying with the formwork specifications in Subsection 601-3.02(C). Strict compliance to Subsection 601-3.02(C) actually produces a formed finish of higher quality than what is generally shown in the reference manual.

Form Release Agents

Contractors use form oil or a chemical to preserve the forms for reuse and to reduce the adhesion between the form and the concrete. Excessive use of such material may discolor the concrete and should be avoided particularly on sections of the structure where appearance is important. The form oil must not adversely affect the concrete. When architectural concrete is specified, the formliner manufacturer should approve the form release agent. The Department leaves the approval of the form release agent to the Resident Engineer who usually delegates that authority to the Inspector.

Rate of Pour

Forms must be designed and constructed to withstand the fluid pressure of fresh concrete plus any live loads (vibration and worker activities). The horizontal fluid pressure against forms on walls, columns, piers, etc. is very high if the concrete is placed rapidly. Slower placement allows the bottom concrete to settle and partially set before the top section is placed. This lowers the horizontal pressure near the bottom forms. Contractors must control the rate of placement so that the side forms do not bulge excessively or fail. Bulging can adversely affect the appearance of concrete while form failures jeopardize the safety of everyone working around the forms. It is suggested the Inspector check with the Contractor's foreperson regarding the maximum pour rate that the forms are designed to handle.

(D) Removal of Falsework and Forms

The importance of distinguishing between falsework and formwork becomes apparent when discussing the removal of either one after the concrete has hardened. Refer to Subsection 601-3.02(A) of this manual if you are not sure of the difference between the two.

Forms

Formwork can be removed once the concrete has set and has adequate time to harden. Concrete columns as high as 21 feet (7 meters) have had their forms removed the next day once the concrete stood up on its own. The Contractor must obtain the approval of the Resident Engineer before any forms can be removed.

Upon form removal, the Contractor must continue to cure the concrete until seven days after the pour (see Subsection 1006-6).

When a Class II finish is required, the Contractor cannot spray the exposed concrete with curing compound until the Class II finish is completed and inspected. When no other acceptable curing method is available, Inspectors have required the Contractor to leave forms on for seven days unless the Contractor can complete the Class II finish in a reasonable amount of time (usually the same day the forms are removed). For bridge barrier and other concrete surfaces above the bridge deck, the Contractor is allowed up to four days to complete the Class II finish when early removal of the forms is allowed.

Falsework

Falsework removal must follow strict requirements for both concrete strength and age.

The strength requirement ensures that the concrete can adequately support its own weight without cracking or deflecting excessively.

The age requirement ensures that the concrete is mature enough to resist the long-term affects of creep. Creep is the prolonged deformation of concrete due to sustained loading. Creep is what causes concrete bridges to sag.

Once the falsework is removed, the concrete begins to creep under its own weight. Young concrete will creep much more than mature concrete even when the strengths are similar. As a result, it is important for the Inspector to enforce the time limitations in the Standard Specifications even if the Contractor can show early cylinder breaks equal to or greater than the required strength.

Occasionally the Contractor will want to temporarily remove parts of the falsework in order to remove the formwork that can be used elsewhere on the project. No temporary removal of falsework supports such as stringers, joists, shores, or mudsills shall be allowed even for a few moments. The concrete must be continuously supported until the strength and time requirements are met. Occasionally lateral braces can be removed early with the approval of the Resident Engineer.

On post-tensioned box girder bridges, falsework (except for the deck overhangs) must stay in place until after the grouting of the post-tensioning ducts. This is a safety precaution in case there is an anchorage failure. Until the prestressing strands are bonded to the post-tensioning ducts, the ends of the bridge carry all the prestressing loads. If the anchors fail (and this can happen), the falsework is in place to catch the superstructure as it falls. The falsework is also there to serve as a working platform during grouting. If there is a leak in any of the post-tensioning ducts, the Contractor will need to have access to the underside of the bridge to find and repair the leak. Partial removal of some of the falsework members is allowed to provide access to a bottom portion of the bridge.

The Resident Engineer should discuss the falsework removal procedure with the Contractor to verify each element can be done safely both in terms of the traveling public and the on-site workers. The falsework drawings may have a specific removal sequence that the Contractor must follow. The Inspector should keep a schedule of placement dates and projected dates for removal of falsework in order to avoid any premature removals.

601-3.03 Placing Concrete

(A) General Requirements

The Resident Engineer may suspend a pour due to weather limitations. Like other types of concrete, structural concrete has both temperature restrictions and precipitation limitations. Subsections 105.02 and 1006-5 can be used by the Resident Engineer to suspend work if it is in the best interest of the Department. Keep in mind that only the threat of precipitation is needed to justify suspending the work. You don't have to wait until it is actually raining or snowing.

The quality of the project work should always come first in the Inspector's mind. Quality is the main reason why Inspectors are assigned to a project. Inspectors must not worry about the schedule when it comes to compromising the requirements of the Project Plans and specifications. Let the Resident Engineer worry about the schedule. Stay focused on the Project Plans and specifications and help the Contractor to achieve 100 percent compliance.

Inspectors need adequate time to inspect structural concrete forms, falsework, and steel reinforcement prior to concrete placement. This amount of time will vary from just a few minutes for a concrete catch basin to a few hours for a large bridge deck. Contractors on the other hand want to place concrete the moment the

forms are up and the last piece of reinforcing bar is tied in place.

The Inspectors and the Contractor's foreperson should meet ahead of time to discuss pour schedules, steel placement activities, steel and formwork inspection requirements, and traffic and safety issues. The Contractor's foreperson is often under enormous pressure to meet deadlines and stay on schedule. Shortages of materials and labor, which are usually not the fault of the foreperson, just add to the pressure.

When there is finite amount of time to place forms and steel, foremen and forewomen usually try to make up for any delays by trying to shorten the inspection time. Inspectors then feel rushed and pressured to accept sub-standard work in an effort to help out their "partner." Partnering was never meant to allow relaxation of the contract specifications. Here are some do's and don'ts to help the Inspector and the Contractor get through these tough situations:

Do:

- frequently perform inspections as forms are going up and steel is placed to catch errors early on;
- meet with Contractor's foreperson daily to discuss quality issues and progress;
- point out recurring non-compliance issues to the Contractor no matter how unpleasant it becomes;
- keep the Contractor informed of your inspection time requirements;
- adjust your inspection schedule if the Contractor experiences delays (be flexible);
- escalate chronic, unresolvable, non-compliance issues no matter how small they are;
- develop a feel for how the foreperson plans and executes the work, and adjust your daily work hours accordingly;
- go through the Project Plans with the various trade foreperson to verify they haven't missed some important details you may have noticed;
- keep ahead of the Contractor by looking through the Project Plans and specifications to see what could get the Contractor into trouble later on;
- build a relationship based on cooperation and professional courtesy; and
- always be willing to help the Contractor clarify and interpret the Project Plans and specifications.

Do Not:

- allow the Contractor to rush you by cutting short your inspection time;
- close the lines of communications between you and the Contractor no matter how tough things become;
- take the Contractor's lack of attention to the contract specification requirements personally;
- delay inspections to the very last minute;
- keep to yourself defects you see in the Contractors work;
- compromise yourself or the specifications just to meet a schedule (escalate instead);
- become reactionary if the Contractor ignores you or does not take you seriously;
- get into a power struggle with the Contractor over pour scheduling versus inspection time; and
- direct the Contractor how to perform the work.

Skewed Bridges

All bridges that are built on a skew have special requirements that are sometimes overlooked by Contractors and Inspectors. Exhibit 601-3.03-1 shows the basic configuration of a skewed bridge. Typically the abutments are not perpendicular to the centerline of the roadway. They are set at some angle other than 90 degrees and can be as low as 45 degrees. However the girders run parallel to the roadway centerline. As a result, the angle between the abutment and the girders is not 90 degrees.

The concern here deals with the pouring and finishing of bridge decks. The bridge deck must be poured

and finished in the direction of the skew angle and not perpendicular to roadway centerline.

Typically bridge decks have camber built into them to offset the long-term effects of creep. Creep affects the girders under the deck and causes the girders to sag with time. To ensure this sag does not show up in the deck, the Bridge Designer will set the deck elevations higher at the midpoint of the girders than at the ends where the girders come in contact with a pier or abutment. In order to build this camber into the bridge deck, the finishing machine must come in contact with the same point of each girder at the same time (see Exhibit 601-3.03-1). The girders must be loaded uniformly so they all deflect evenly.

The best way to achieve the proper deck camber is to set the finishing machine at the same skew angle as the piers and abutments, not perpendicular to the roadway centerline. On bridges with a slight skew (less than 20 degrees), the Designer may allow the finishing machine to be set perpendicular to centerline. However, the Resident Engineer should obtain the Designer's approval before allowing the Contractor to finish in this direction.

Setting the finishing machine to finish along the skew angle requires a longer machine and some rail adjustments on the Contractor's part. Finishing along the skew is usually something most concrete foreperson's do not anticipate. Notify the Contractor about this requirement at the pre-pour meeting.

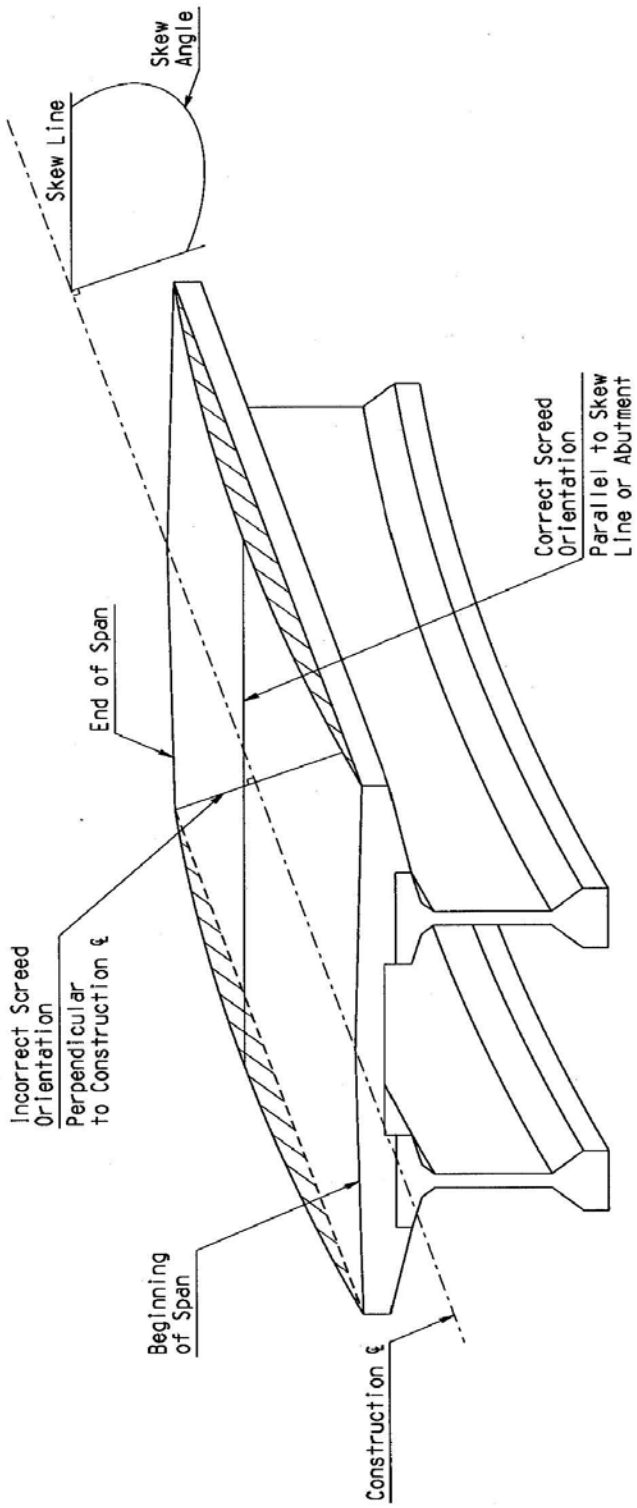

CORRECT SCREED ORIENTATION FOR SKEWED BRIDGES

Exhibit 601-3.03-1 Skewed Bridges

Tining on a Skew

The tining of the bridge deck becomes a problem when the deck is poured on the skew angle. Tining the deck transversely to the roadway centerline can lead to uneven tining on skewed bridges. The tining rake crosses each girder at a different point along its span. The rake may start near the low point of an exterior girder (at a pier for instance) and cross the midpoint of one of the interior girders. This causes uneven contact pressure since the deck is higher at the girder midpoints due to camber.

The solution is to texture the deck at the same skew angle that it was finished. However this is a direct violation of Subsection 601-3.05(D). The Department does waive this provision for skewed bridges when the bridges must be finished at the skew angle. The intent is to get some type of texturing into the deck. The angle of the texture is not as important as its presence.

Rate of Placement and Cold Joints

On small structures, especially short sections of retaining wall and box culverts, the Resident Engineer may waive the minimum pour rate in Subsection 601-3.03(A) to avoid over loading the Contractor's formwork.

The Standard Specifications specify minimum pour rates. The pour rates are intended to keep cold joints from forming in a structure. A cold joint is formed when fresh concrete is poured against partially set or hardened concrete. Cold joints can form when there is a long interruption during a concrete pour or when the pour rate is too slow to keep each layer of fresh concrete in contact with a previous layer of concrete that is still fresh. Loads and stresses in the structures can cause the concrete to crack or pull apart at the cold joint.

Cold joints are dependent on the concrete's set time that is affected by temperature, admixtures, and the type of cement and pozzolans used. There is no rule of thumb that says when a cold joint will occur. The Inspector and Resident Engineer must carefully examine the concrete after the forms are removed for any visible layering or discoloring. If you suspect a cold joint does exist say so and reject the structure. The Contractor is then obligated to submit a proposal.

At this point the Contractor has several options:

1. Core the structure at the cold joint and strength test the cores to see if they will fail at the cold joint.

2. Submit an engineering analysis proving the cold joint is not detrimental to the structure.

3. Repair the cold joint.

4. Remove concrete beyond the cold joint to a place in the structure where a construction joint would be acceptable.

All of these alternatives can be time consuming and costly. Thus it is very important to work with the Contractor to minimize the risks of forming cold joints. It is advisable for the Inspector not to stop a concrete pour when you suspect a cold joint may be forming. Let the Contractor and the Resident Engineer make this call. Usually the burden is placed entirely on the Contractor and the Resident Engineer will only interfere when the cold joint and its detriment to the structure are obvious.

Steel Reinforcement Placement

Section 605 is devoted entirely to the requirements of steel reinforcement. It covers material requirements, splicing methods, placement tolerances, and bending requirements. The following is a brief discussion on how reinforcing steel or "rebar", as it is commonly called, affects concrete placement.

Reinforced concrete is a composite material consisting of steel and concrete. Composite materials work best when the reinforcement (the steel) is in continuous contact with the matrix (the concrete) and both are combined in the right proportions. Since the reinforcement and the matrix carry the loads, continuous contact between the two will provide a uniform transfer of the stresses. When there are voids near the reinforcement due to poor concrete placement or consolidation, higher stresses develop in the concrete than would normally be expected. These stresses lead to poor load transfer to the steel and allows premature cracking and water to enter into the void around the steel causing corrosion. Thus it is important for the Inspector to verify that there is good consolidation of the concrete around all reinforcing steel. The intent is to have no air voids around any reinforcing steel. Adequate concrete cover over the reinforcing steel near any surface is needed to prevent steel corrosion. The Project Plans will specify the amount of cover required, which is usually a minimum. Inspectors should be vigilant about ensuring adequate cover over all reinforcing steel.

Concrete itself is a composite material. The fine and coarse aggregates act as the reinforcement while the cement, water, and admixtures act as the matrix. Concrete behaves best when the matrix and reinforcement are in continuous contact with each other and are mixed in the right proportions. Steel reinforcement can interrupt this continuity when the bars are placed too close together. If there is not sufficient room for the coarse aggregate to help fill the space between the bars, there is no longer reinforced concrete, but reinforced mortar. Mortar is more prone to shrinkage and cracking than concrete.

To avoid this situation, Subsection 1006-3.01 limits the maximum size aggregate to the least of:

- 2/3 of the clear spacing between reinforcing steel bars or bar bundles;
- 1/5 of the narrowest form dimension; or
- 1/3 the depth of the slab.

For example: if 5/8 inch coarse aggregate is used:

- the minimum clear spacing between bars would be 5/8 ÷ 2/3 = 15/16 ~1 inch;
- the narrowest form dimension would be 5/8 ÷ 1/5 = 25/8 = 3 1/8 inches and;
- the minimum slab depth would be 5/8 ÷ 1/3 = 15/8 ~2 inches.

Inspectors need to know the size of the coarse aggregate used so they can check for adequate rebar spacing and form size. It is not uncommon in areas where bars are lap spliced to find a spacing problem. Pier caps often have rebar spacing problems especially where the vertical pier steel penetrates into the cap beam.

Rebar spacing and cover problems should be brought to the attention of the Contractor and Designer. Both have the responsibility to ensure that the Standard Specifications are followed.

(B) Bridge Deck

The Resident Engineer must hold a pre-pour meeting with the Contractor before any series of bridge deck pours. The intent is to have the Contractor's concrete foreperson describe how the deck concrete will be placed, consolidated, finished, textured, and cured. As a minimum, the following discussion should be covered:

1. the Contractor's pour sequence plan which shall include the location of all construction joints by span and station, the width and quantity of concrete to be placed, the scheduled time for each placement, the direction of placement and orientation of the screed, the proposed screed, and the means of setting and controlling screed grades;
2. the equipment to be used for vibrating, finishing, floating, tining, misting, and curing;
3. type of materials used for curing;
4. crew experience and assignments;
5. inspection staffing, procedures and timing;
6. rebar placement and scheduling;
7. material sampling, testing, and certification (concrete, rebar, curing compound, precast mortar blocks, etc.);
8. plant operations, inspections and concrete deliveries;
9. on-site and off-site traffic control (traffic under the deck pour should be avoided);
10. safety hazards and protective equipment;
11. ladders and walkways for personnel access;
12. contingencies for plant failures, pump breakdown, screed stoppages and inclement weather (rain, snow, dry winds, falling temperatures); and
13. illumination requirements if at night.

These thirteen points should be used as a basis for developing an agenda for the pre-pour meeting.

Bridge deck pours are difficult and expensive to stop once they get started. The idea behind the pre-pour meeting is to ensure both the Contractor's and the Department's field personnel have a clear understanding of how the deck will be poured and what inspection procedures will be followed. The time to have discussions about good construction practices and specification enforcement is in a meeting room, not on top of the bridge. Thus it is important for everyone on the Contractor's and ADOT's team to clearly understand all the details of the pour. The Project Supervisors and Inspectors should be free to ask questions so they can fully understand the Contractor's methods. The Resident Engineer should ferret out any hidden agendas on both sides, ask the tough questions nobody wants to ask, and get a commitment from the Contractors staff to do what they say they are going to do

Pour Sequence

Bridge superstructures, particularly bridge decks, follow a pour sequence where some portions of the deck or superstructure are poured before others. The pour sequence can be found in the Project Plans. The Project Supervisor must ensure the Contractor strictly follows the pour sequence.

The pour sequence is intended to place much of the concrete for the superstructure in the midspan areas before placing concrete over the piers. The placement sequence allows the reinforcing steel over the piers to move as the bridge deflects from the weight of the concrete. If the concrete over the piers were poured first, the rebar would be locked into place as soon as the concrete hardens. When the midspan areas are poured, the concrete over the piers could crack as the concrete tries to restrain the rebar from moving.

Occasionally the Contractor would like to alter the pour sequence by using retarders in the concrete. This should be done by a written proposal and a minor alteration. The use of retarders requires the approval of the Bridge Designer, ADOT Bridge Group, and Materials Group.

Generally bridges built on soffit fill do not have to follow a pour sequence unless required by the Project Plans.

(C) Pumping Concrete

When concrete is pumped, the Contractor must have a standby pump in case the primary pump fails. It is not necessary for the standby pump to be at the job site as long as it can be mobilized and placed in operation within 30 minutes of a pump failure.

It is considered good practice on monolithic pours to allow a waiting period from two hours (minimum) to four hours (maximum) following concrete placement in walls, columns, or piers before permitting fresh concrete to be placed on top of these members. This delay can be modified where wall height is 6 feet (2 meters) or less. The delay is necessary to allow most of the settlement and shrinkage in the earlier placements to occur; thus, decreasing the probability of cracking at the junction of the two placements.

In some cases, the Project Plans will indicate the sequence of placing concrete in a structure. When not shown on the Project Plans, the Resident Engineer should require the concrete to be placed continuously throughout each section of the structure or between indicated joints. The concrete placement rate should be such that no cold joints are formed within monolithic sections

(D) Vibrating Concrete

The Standard Specifications require all concrete in structures to be vibrated. The purpose is to cause the concrete mix to envelop and bond to the reinforcement, fill voids, and make the structure more waterproof and durable. The concrete vibrator, when properly used, is a good tool for working the concrete under and around closely spaced reinforcement.

Operation of the vibrator requires some skill and considerable physical effort. Workers who are charged with this responsibility should have some experience and instruction in proper methods of vibrating. The vibrator should not be left in any one area of concrete longer than a few seconds. As soon as the surface of the concrete surrounding the vibrator ceases to settle, it should be pulled out slowly and inserted slowly into a new area in accordance with the pattern indicated in the Standard Specifications. Excessive vibration should be avoided as it tends to cause segregation and increases the lateral pressure on the forms.

Subsection 601-3.03(D) allows the Contractor to use only approved vibrators for consolidating structural concrete. It is up to the Inspector or Project Supervisor to approve or disapprove vibrators. Inspection of vibrators and other placing and finishing equipment should be done at least one day before the pour so the Contractor can replace any substandard equipment.

The minimum vibration frequency is 8,000 cycles per minute (130 Hz) in fresh concrete. If the Inspector suspects the vibrator is not operating at or above the minimum frequency, measure the vibrator's frequency with a portable tachometer or a vibrating reed called a Vibra-Tak. ADOT's regional or central lab should have these instruments. The frequency should be measured with the vibrator operating in and out of the concrete. A significant difference between the vibrator's measured frequencies in and out of concrete may indicate that the vibrator is in need of repair or there is an inadequate power or air supply.

Contractors should operate vibrators in accordance with the manufacturer's recommendations. If the Inspector suspects that the Contractor is not using a vibrator properly, the vibrator can be rejected for not being the suitable to the Contractors placement methods. Consult the manufacturer's recommendations to make this determination.

The depositing of concrete at one point and moving it with the vibrator is not permitted. Concrete should be placed in approximately horizontal layers not more than 24 inches (600 mm) deep. If concrete flow movement is unavoidable, it should be done with shovels rather than vibration. Moving concrete horizontally causes the grout to flow while the rocks settle.

Bridge screeds should be equipped with vibrators. Bidwells and other commercially available screeds can be equipped with external vibrators mounted in front of the rollers. These vibrators must clear the top mat of reinforcing steel and are used to ensure that the riding surface of the deck is properly consolidated for long-term wear.

601-3.04 Joints in Major Structures

(A) Construction Joints

There are basically only two types of joints in any reinforced concrete structure: the construction joint and the expansion joint.

The construction joint is a provisional joint used primarily to terminate a concrete pour at a predetermined location. Some structures are so large that it is not possible or desirable to pour them all at once. The construction joint is intended to provide a temporary means of ending a concrete pour while still providing structural continuity (that is adequate load transfer across the joint). The installation of construction joints is generally straightforward. A form serves as a bulkhead where the pour is terminated. Usually rebar will protrude through the form and a key is usually formed on the joint face (see Project Plans). The form is stripped the next day except when a stay-in-place form is used. The joint is then cleaned with either sand or water blasting (if more than eight hours old) and the next pour is continued.

Inspectors need to carefully examine construction joints in structures for:

- the correct location and orientation;
- correct concrete placement procedures (ensure only the best concrete is used and that it is properly placed and consolidated—don't use the first concrete out of the chute or pump line);
- proper cleaning and blasting (don't over blast the joint since this will only loosen the coarse aggregate); and
- smoothness across the joint when placed in a bridge deck or other riding surface (this will require a large amount of straight edging and careful screeding and re-screeding by the Contractor).

Expansion Joints

The expansion joint is intended to allow movement between adjacent structures or between different members within a structure. This movement prevents stress build-up due to creep, shrinkage, or temperature changes that would seriously crack the structure.

Expansion joints create a small gap between two structures or structural members (abutment vs. girders) that allow for movement. There are three important things that the Inspector must keep in mind about expansion joints:

1. The joint is in the correct location and runs the full depth and length required by the Project Plans (the joint must completely separate the two structures or structural elements).

2. The gap is set at the correct width.

3. There are no obstructions or connections between the two structures (rebar, conduit, utility lines or loose concrete) that would interfere with the opening and closing of the joint. Only approved fillers and sealant materials should used.

Expansion joints are shown on the Project Plans. Expansion joints can be found between abutments and bridge superstructures; between two sections of a long bridge superstructure; between anchor and approach slabs; and between approach slabs and abutments.

Near the surface of an expansion joint, a compressible material (such as a bituminous or cellular plastic filler) is placed to prevent rocks, nails, and other incompressible material from entering the joint that would prevent movement. On top of the filler, a joint sealant is placed to prevent water from entering the joint. For expansion joints adjacent to bridge decks, a deck joint assembly is installed and serves as the joint filler and sealant.

Joint Location and Weakened Plane Joints

The Project Plans will show the location of all joints. Construction joints are usually oriented and located in areas where load transfer is uniform or at a minimum. With the Designer's approval, the Contractor may add, alter, or relocate construction joints. Subsection 1.8.5 of the *Bridge Design and Detailing Manual* includes guidelines acceptable to ADOT for locating construction joints.

The weakened plane joint (where the concrete is partially sawn to control cracking) is rarely used in reinforced concrete structures. Reinforcement steel acts like a crack stopper so there is no guarantee that the concrete will crack at the weakened plane joint. Expansion joints are used to control cracking.

(B) Deck Joint Assemblies

ADOT most widely uses two types of deck joint assemblies. The compression seal joint (which is shown in Structure Detail Drawing SD-3.01) and the strip seal joint (Structure Detail Drawing SD 3.02 shown in Exhibit 601-3.04-1). Both are designed to keep out water and prevent debris from falling into the joint.

The Contractor must submit shop drawings for all deck joint assemblies in accordance with Subsection 601-3.04(B)(3)(b). The Bridge Designer will review and approve the shop drawings.

The Inspector must have these shop drawings on hand when the Contractor installs the deck joint assemblies. The shop drawings will describe the method of installation. The Inspector should ensure this method is followed. In addition, a temperature correction chart should be included with the drawings. It is very important for the Inspector to ensure that the correct gap width for the joint is set prior to pouring the joint. The width is based on the structure temperature (not air temperature) at the time of the pour, which can be read from the chart. Setting the joint at the incorrect gap can create long-term maintenance problems for the Department. A gap that is set too wide can cause the joint material to tear or fall out as the joint expands. A gap that is set too narrow can cause the joint to close, which can severely crack the bridge deck, girders, and diaphragms.

However, unless a more precise method of measuring the temperature of the main superstructure members is used, the setting temperature of the bridge shall be taken as the mean shade air temperature under the structure. This temperature shall be the average over the 24-hour period immediately preceding the setting event for steel bridges and over 48 hours for concrete bridges.

Here are some other inspection checks the Inspector can do to ensure the Department gets long-lasting, worry-free deck joints:

- A long-lasting joint is a smooth joint—ensure the steel guard angles on each side of the joint are correctly recessed so that no bump or dip will occur as vehicles pass over the joint (concrete grinding should be done to improve the smoothness).
- Sample the seal material and have it tested.
- Ensure the existing concrete adjacent to the joint is coated only with an approved adhesive.
- Ensure the Contractor achieves good consolidation of the concrete under the guard angles.
- Ensure bolts in the erection angle are loosened after the concrete has set to allow movement.
- Enforce all the provisions of Subsection 601-3.04. They were written to provide the Department with durable, high quality deck joints.

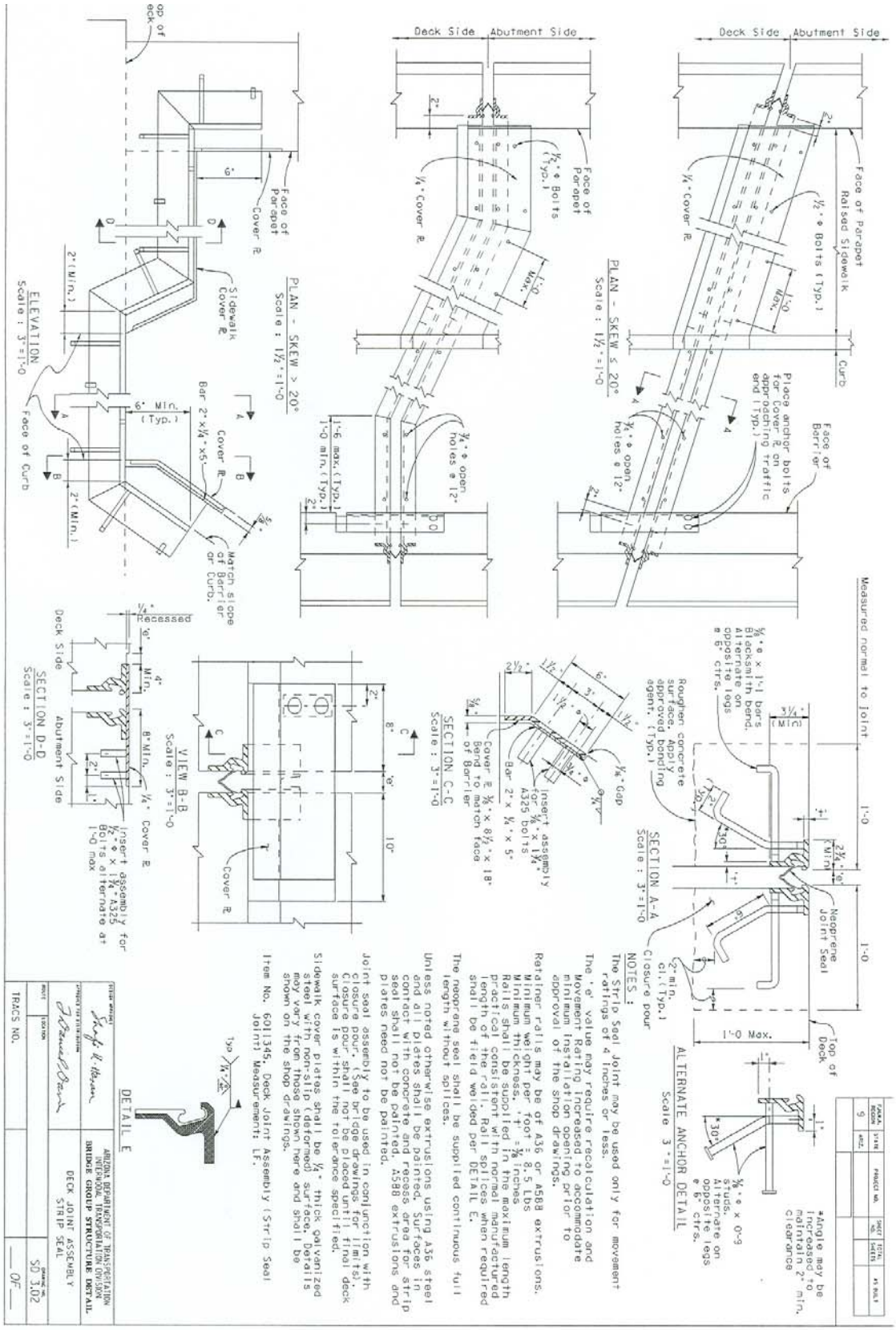

Exhibit 601-3.04-1 Strip Seal Joint Detail

601-3.05 Finishing Concrete

All formed surfaces require a Class I finish, as a minimum. The intent is to provide a concrete surface that is hard, sound, and reasonably impenetrable to moisture. No steel is allowed within 1 inch (25 mm) of the surface. This is to prevent the establishment of a rust channel that could corrode the reinforcement. A Class I finish is just as important below ground as it is above. In fact, the potential for rebar corrosion is much higher underground.

When formed surfaces will remain in view of the traveling public, the Contractor must use forms that will provide a "pleasing appearance of uniform color and texture." This appearance can be somewhat subjective so the Department has published a *Concrete Finish Reference Manual* for the Inspector and Contractor to use as a guide.

A Class II finish is required when the Contractor's forming system does not produce the "pleasing appearance of uniform color and texture" required by the Standard Specifications. The intent of Subsection 601-3.05 is for the Contractor to produce the proper finish without having to resort to performing a Class II finish. In other words, the Contractor cannot use damaged forms or substandard forms and perform a Class II finish after stripping. The Class II finish procedure is merely in the Standard Specifications as a contingency for the unexpected occasion where the formed finish is not pleasing in appearance. It is not a replacement for good concrete forming practices.

If a formed surface does require finishing, Subsection 601-3.05(A) specifies the finishing to begin *immediately* upon removal of the forms. Immediately does not mean tomorrow or next week. Contractors are often anxious to get their forms down as quickly as possible, but may not want to provide the labor necessary to finish and cure the exposed surfaces immediately after removal.

Resident Engineers have required the Contractor to leave forms in place until a satisfactory crew could be assembled to finish and cure the exposed concrete. Mortar adheres to young concrete much better than to older concrete and it is easier to obtain a more uniform color and texture. In the long term, the surface will be more durable and uniform in color and texture if the concrete is finished when it is still relatively young.

(D) Finishing Bridge Deck

One area of bridge deck finishing that Inspectors and Contractors should always pay close attention to is the deck smoothness at the joints. On precast girder bridges, this is especially important since many construction joints are needed to comply with the required pour sequence (see Subsection 601-3.03 of this manual for further information). Any irregularities disclosed by the straight edging should be corrected immediately. Attention should be given to finishing the gutter lines on bridges particularly on nearly flat grades in order to preserve good longitudinal drainage.

The Inspector should allow the Contractor to make minor adjustments to the screed grades to obtain the smoothest joint possible while maintaining a deck thickness within allowable tolerances. In some cases, the Contractor may need to back up the screed and re-screed the surface to get the required smoothness. A small uniform roll of concrete should be maintained ahead of the screed. This requires constant attention when the screed is in operation. The smoothness of the deck will be governed to a great extent on how smoothly the screed operates.

For bridges longer than 300 feet (100 meters), using the profilograph might be warranted to locate areas on the surface that are suspected of being too rough. Using the profilograph should be supplemented with the use of a

conventional straightedge when any suspected areas are located. The profilograph has two advantages over the straightedge. First it records on paper a scaled profile of the surface. Second this profile can be converted into a Profile Index of inches per mile of roughness. This index figure can then be compared with indices of other bridges and pavements. However the Profile Index is not a requirement bridge decks must meet; only the straight edge requirements apply.

Experience is important in the evaluation of straightedge and profile data. Occasionally high spots are really on grade, but the low areas make the high spots look high. When this condition exists, cutting the area to meet tolerances over the low spots may result in removing too much of the surface and reducing the reinforcing clearance.

Subsection 601-3.03 of this manual describes special finishing and texturing requirements for skewed bridges.

As one last reminder, Inspectors should spot check the deck thickness behind the screed. Inserting a piece of thick steel wire or rebar into the fresh concrete can do this. The measurement will ensure that the Department is obtaining the correct deck thickness and can alert everyone to potential problems that can be corrected while the concrete is still being placed.

601-3.06 Curing Concrete

Section 1006-6.01 specifies how all cast-in-place concrete shall be cured. Curing should not be delayed more than one hour after surface texturing or form removal. Any remedial finishing operation should be finished as soon as possible and should not interrupt curing for more than one hour. The bottom line is, Contractors need to have sufficient labor available to begin Class I or II finishing and apply curing as soon as the forms are removed—not three hours or three days later.

There are three methods that are acceptable to the Department:

1. the water curing method;

2. the curing compound method; and

3. the forms-in-place method.

The type of curing method that is used depends on the type of concrete surface:

- For formed surfaces, the Contractor has the option of using either water curing, curing compound, or leaving the forms in place.
- For unformed surfaces (such as top of walls, concrete pavements, etc.), the Contractor has the option of using either water curing or curing compound.
- For bridge decks, the Contractor must use both water curing and curing compound.

Water Curing Method

The curing process is as follows:

1. Apply water to the concrete surface with a water atomizer immediately behind the finishing or texturing operation (see Subsection 1006-6.01[A], first paragraph).

2. Continue to apply water with an atomizer until the concrete has set or a curing medium has been applied then either:

    A. apply a curing medium—burlap, Burlene, rugs, carpets, or earth blankets and keep them continuously moist, or
    B. continuously spray with water,

3. Continue 2a or 2b for seven days.

Curing Compound Method

The materials in many curing compounds separate, requiring the curing compound to be mixed or agitated before use. The Standard Specifications do not require agitation specifically, but the Resident Engineer may require this to maintain the integrity of the curing compound. Inspectors should verify that the curing compound has been agitated properly. Propellers and air agitation have been used. Rolling a barrel on the ground is not acceptable. Thorough mixing should be done at least once daily when curing compound is being used.

When curing compound is to be applied to an exposed horizontal surface, it should be applied just after any bleed water or other standing water has left the surface. On formed surfaces that require a Class I finish, the curing compound should be applied as soon as possible after removal of the forms. The application should only be delayed long enough to permit any needed repair work. On surfaces that require a Class II finish, it is somewhat of a problem to perform good finishing and the curing simultaneously. Both are important and both need to be performed early.

Forms in Place Method

For this method the Contractor merely leaves the forms on for seven days (see Subsection 1006-6.01[D]).

Curing Bridge Deck

Curing bridge decks requires a combination of wet curing and the application of curing compound. This curing process is more intricate than curing other concrete members.

The generally accepted procedure is to:

1. finish and texture the bridge deck;
2. immediately spray with curing compound;
3. continuously apply atomized water until curing medium is applied;
4. apply the curing medium within 4 hours of the finishing operation—usually wet burlap or Burlene; and
5. continuing wet curing for seven days.

In the past, the Department has allowed step number 3 to be an option for the Inspector. The decision to waive this step should be based on weather conditions (including wind speed, relative humidity, temperature and cloud conditions). On very hot and dry days, Contractors have been required to begin atomizing before the texture or curing compound can be applied (Subsection 601-3.05[D]).

601-3.07 Supporting, Handling, and Transporting Precast Concrete Items

Minor precast structures are defined as precast items such as cattle guards, catch basins, manholes, median barriers, and other small miscellaneous structures. The great majority of minor precast structures are fabricated in Phoenix. Only the fabricators shown in the Special Provisions are approved to supply minor precast structures to ADOT projects.

It is the responsibility of ADOT Materials Group to inspect the fabrication of precast concrete structures and accept or reject the finished product. Precast units are accepted if strength tests indicate at least the required 28 day compressive strength. The compressive strength is determined by use of a rebound hammer and a calibration curve. The curve is established from rebound readings taken on concrete test cylinders fabricated at the precast plant and from the actual compressive strength of the cylinders.

When the Central Laboratory accepts precast units, each unit is stamped to show acceptance. The stamp consists of the letters "ADOT" on the unit by use of a stencil and black ink. The letters are approximately 2 inches (50 mm) high.

When precast units arrive on the project, they shall be accompanied by a Certificate of Compliance and shall include a copy of the approved mix design. The Contractor shall certify that sufficient concrete testing has been performed to ensure compliance with the slump and air entraining requirements. If the precast units have been damaged during shipping or there is any reason to question the workmanship, it is the responsibility of the Project Supervisor or Inspectors to reject the units or have them repaired satisfactorily.

Installation of precast items should be done in accordance with the manufacturer's recommendations and any installation notes specified in the Project Plans or Special Provisions. Careful assembly is required when gaskets and joint materials are used to obtain a watertight seal between each precast member.

601-3.08 Backfilling

Refer to Subsection 203-5.03(B) of this manual and Standard Drawings B-19.40 and 19.50 for additional information on structure backfilling.

Often the Contractor will ask to be allowed to use native material as structure backfill. This is acceptable as long as the material meets all the requirements of Subsection 203-5.03(B)(1). Sometimes the Contractor will question why certain structures (such as shallow pier footings or catch basins) require structure backfill at all. The Department has several good reasons, which are listed below, why structure backfill should be used to backfill all structures:

1. Structure backfill is a material of known properties and predictable behavior, on which the Designer can rely, that will not adversely affect their structure.

2. Structure backfill does not contain large rocks or boulders that could damage the structure during backfilling.

3. Structure backfill is permeable and does not allow excessive, long-term hydrostatic pressures to build around the structure.

4. Structure backfill has pH and resistivity requirements designed to inhibit the corrosion of reinforcing steel in the structure.

5. Structure backfill can be compacted to a more uniform density than most other native materials; thus, exerts a more uniform lateral load on the structure.

601-3.09 Vertical Restrainers

Vertical restrainers are 4-foot (1.2-meter) steel cables formed in the shape of a loop. Half of the cable is cast into an abutment or pier while the other half is cast into the diaphragm between the girders. These cables link the bridge superstructure to the substructure. The motions of an earthquake can cause the bridge superstructure to rise off the substructure. If the superstructure rises too high, it can come crashing down on the substructure. The cables are intended to limit the amount the superstructure can raise off the substructure. When vertical restrainers are used, the cables must allow the bridge superstructure to move freely (horizontally at the expansion joints). They must also allow the superstructure to rotate at piers and abutments since the cables are set in place before all loads are placed on the bridge. There are two types of vertical restrainers: 1) one for use at expansion joints and 2) one for use at piers and abutments where expansion capability is not required. Exhibits 601-3.09-1 and 601-3.09-2 show the two types.

EXPANSION RESTRAINER

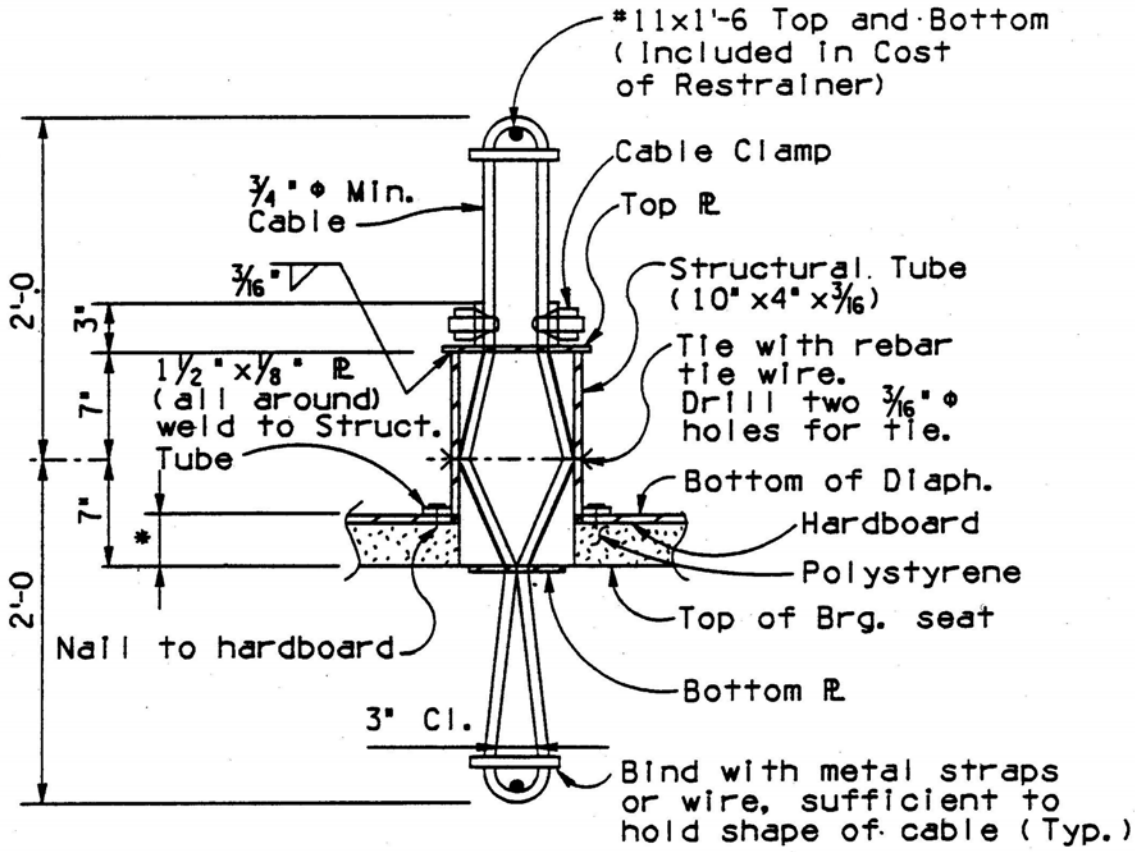

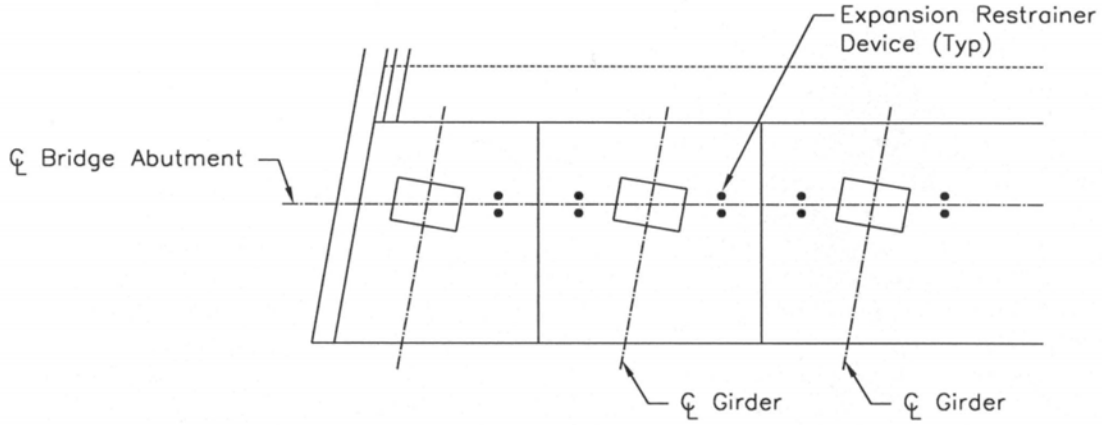

Exhibit 601-3.09-1 Expansion Vertical Restrainers

FIXED RESTRAINER

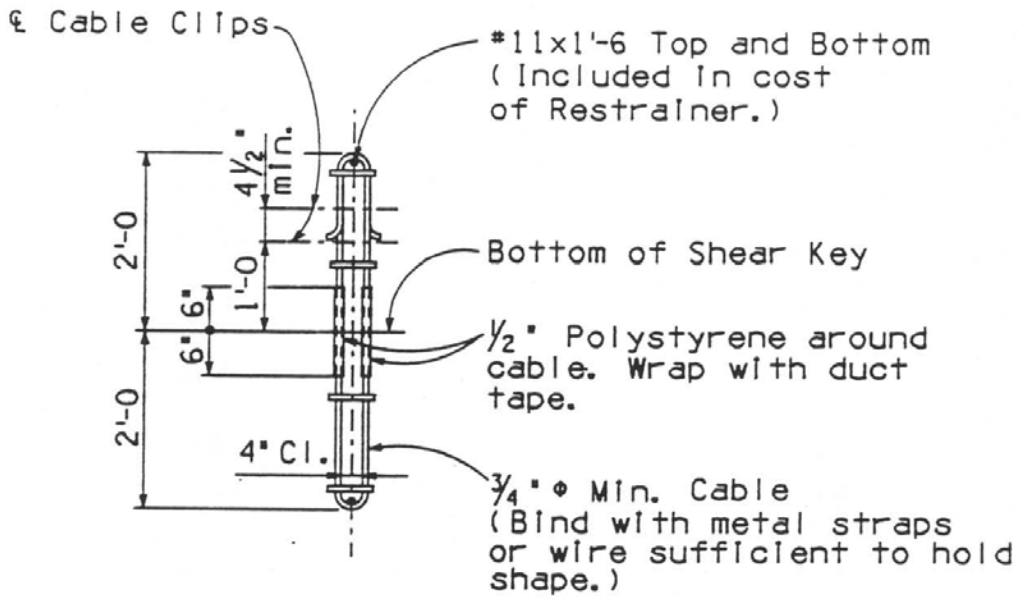

FIXED RESTRAINER DETAIL

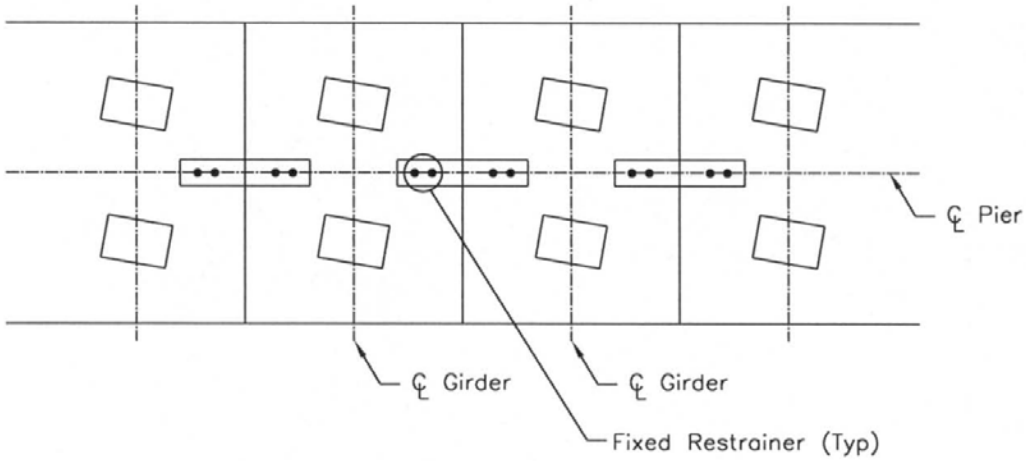

Exhibit 601-3.09-2 Fixed Vertical Restrainers

Orientation of the vertical restrainers is crucial to the long-term performance of the bridge. Fixed restrainers are installed with a different orientation than expansion retainers. It is important to review the Project Plans and verify the correct orientation of each restrainer.

Fixed restrainer cables have the face of the loop parallel to the abutment or pier centerline and perpendicular to the girder as shown in Exhibit 601-3.09-2. This allows the cable to bend or fold over as both the girders and diaphragms rotate due to loading of the superstructure. If the cables were turned ninety degrees they could inhibit the rotation of the diaphragm that might result in undesirable cracking of the diaphragm.

Expansion restrainer cables, on the other hand, have the face of the loop perpendicular to the abutment or pier centerline and parallel to the girder as shown in Exhibit 601-3.09-1. This is due to the fact that part of the loop is contained inside a hollow steel box. This steel box is cast into the superstructure and performs several important functions. First it spreads the cable loop apart. This is done to allow some vertical movement so that the superstructure can be jacked up slightly from the substructure in order to replace any worn bearing pads. Secondly it provides room for the superstructure to move (expand and contract) while allowing the cable to freely bend and stretch as the structure moves. The correct alignment of the box is of critical importance. The box prevents the portion of the cable embedded in the substructure from snagging against the sides of the box as the superstructure moves on the bearing pads. The Designer will specify how wide each box will be based on the amount of expansion and contraction they expect at the joint.

Inspectors are required to sample vertical restrainers and have them tested for breaking strength and compliance with other material specifications. The polystyrene and hardboard used to separate portions of the restrainers from the surrounding concrete have material specifications that the Inspector should enforce.

Superstructure-Substructure Connections

The *superstructure* of a bridge consists of the girders, diaphragms, deck, and barrier. The *substructure* of a bridge consists of the abutments and piers and their foundations. The superstructure carries all loads (weight of traffic, force of the wind, weight of the superstructure itself) between each portion of the substructure (the piers and abutments) and transmits the loads to the substructure. The substructure, in turn, transmits the loads from the superstructure to the ground.

The best way to visualize the difference between superstructure and substructure is to think of the piers and abutments and everything below them as substructure. Everything above the piers and abutments is superstructure. From a load carrying point of view, the superstructure transmits loads horizontally (or diagonally, in the case of an arch) to the substructure and the substructure transmits the loads vertically to the ground.

It is very important for both the Inspector and the Resident Engineer to understand how the superstructure is designed to behave when it comes in contact with the substructure. There are three fundamental ways of connecting the superstructure to the substructure. Although in practice these connections are complicated to build. Understanding how they are supposed to behave, ideally, will help in finding construction errors that could seriously affect the performance of the bridge.

The bridge elevation sheet will show an “E,” “F,” or “P” where the girders of each span come in contact with either a pier or an abutment.

An “E” on the bridge elevation sheet indicates the superstructure is allowed to expand over the substructure. Bearing pads are placed between the girders and girder seats on the substructure to allow independent movement and rotation of the superstructure. Usually an expansion joint is also placed in this location that forms

a physical gap in the superstructure. The important thing to remember is that the superstructure is not physically tied to the substructure. There should be no rebar connecting the girder diaphragm into the pier or abutment. Expansion restrainer cables and perhaps a shear key should be the only things restraining movement of the superstructure. If there is an expansion joint in the superstructure, there should be no rebar or conduit that ties the two portions of the superstructure together. There should be a continuous gap all the way around the diaphragm so the girders can move freely on the bearing pads.

An "F" on the bridge elevation sheet indicates the superstructure is physically tied to the substructure. The superstructure can't move or rotate without the substructure moving or rotating with it. Rebar from the pier or abutment protrudes into the girder diagram forming a rigid connection between the two structures. Bearing pads are used to distribute the loads evenly across the girder seats rather than allow any differential movement. Fixed restrainer cables and shear keys may be used to help resist seismic loads induced from earthquakes. The Resident Engineer and Inspector should verify how the substructure steel is tied to the superstructure steel. Accurate rebar placement and good splicing and tying practices are important so that a highly rigid attachment of the superstructure to the substructure will result.

A "P" on the bridge elevation sheet means the superstructure is attached to the substructure but is allowed to rotate independently like a "pinned" connection. Some rebar will protrude from the substructure to prevent horizontal movement. Fix cable restrainers are used to prevent excessive vertical movement. Bearing pads are used to allow rotation. The Resident Engineer and Inspector should focus their attention on the bearing pads since defective or the wrong bearing pads could inhibit rotation. Rebar placement and positioning of the restrainer cables are other important inspection areas.

Bearing Pads

Very little is said about bearing pads in Section 600 of the Standard Specifications. Section 1013 discusses the material requirements. The Project Plans and Special Provisions specify the installation requirements. The Special Provisions may talk about material requirements for bearing pads not covered by Section 1013.

Bearing pads are typically made of Neoprene or natural rubber. The shape and design of the bearing pad depend on the type of movement allowed. Plain bearing pads are essentially rubber blocks or strips placed under the ends of each girder. They allow the girder ends to rotate. When some horizontal movement is needed, laminated bearing pads are used. The more movement needed, the thicker the pad needs to be in order to flex. When a lot of horizontal movement is needed, a Teflon plate or a greased galvanized steel plate is placed on top of the bearing pad. Exhibits 601-3.09-3, 601-3.09-4, and 601-3.09-5 show typical bearing pad details.

Plain Bearing

Plain bearings may be molded, cut, or extruded to any size and thickness. Plain bearings may also be vulcanize-bonded to top and/or bottom load plates.

Plain bearings may also have holes, slots, skewed ends, clipped corners, and/or circular in shape.

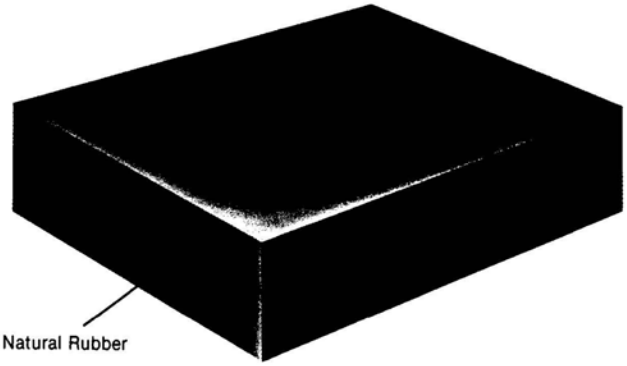

Laminated Bearing

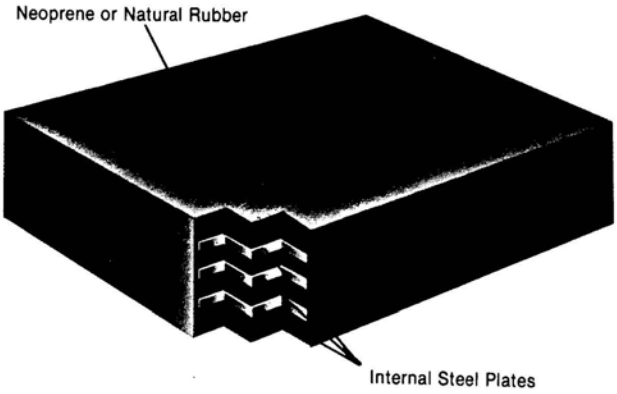

Laminated bearings may be molded to any shape or size, depending on the design requirements. Internal steel plates may vary in thickness and are vulcanize-bonded during the molding process.

Laminated bearings may also be manufactured with top and/or bottom load plates vulcanize-bonded during the molding process. Cover layer thicknesses may be varied according to specific requirements on the top or bottom of a bearing, or on the edges, for environmental resistance.

Sliding Bearing

A sliding bearing consists of two components. The top component incorporates a steel load plate with a polished stainless steel plate welded to it. The top plate is welded or bolted to the girder during installation.

The bottom component consists of a 1/16″-3/32″ TEFLON® sheet bonded to a stainless steel backing plate, bonded to an elastomeric bearing, bonded to a steel load plate. All bonding is done by vulcanization during the molding process.

Sliding bearings may be guided or free to move and are custom made to individual project requirements for material types, expansion, rotation, etc.

Also available are preformed fabric sliding bearings. All miscellaneous elements, including lead plates, anchor bolts, and side retainers, are available as required.

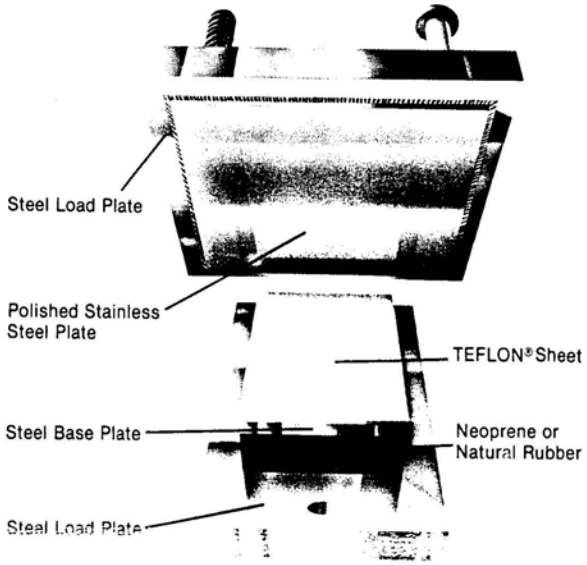

Exhibit 601-3.09-3 Bearing Pads

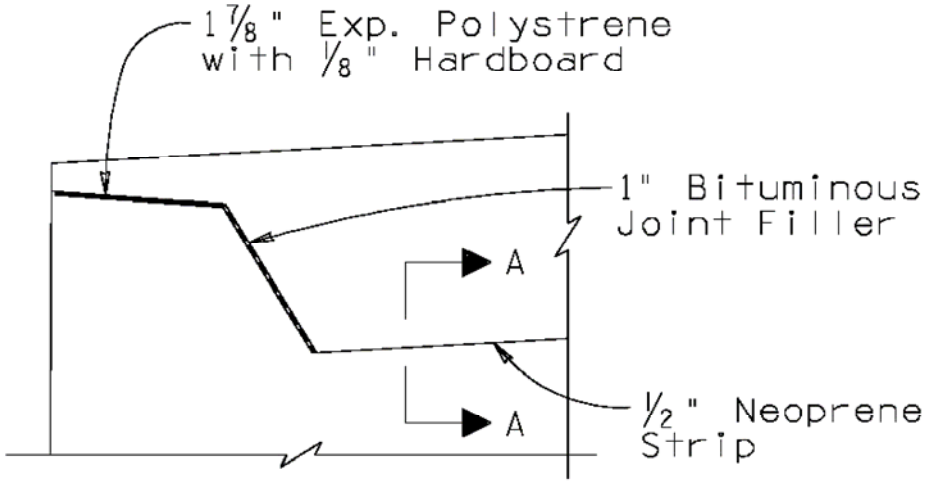

PARTIAL ELEVATION

No Scale

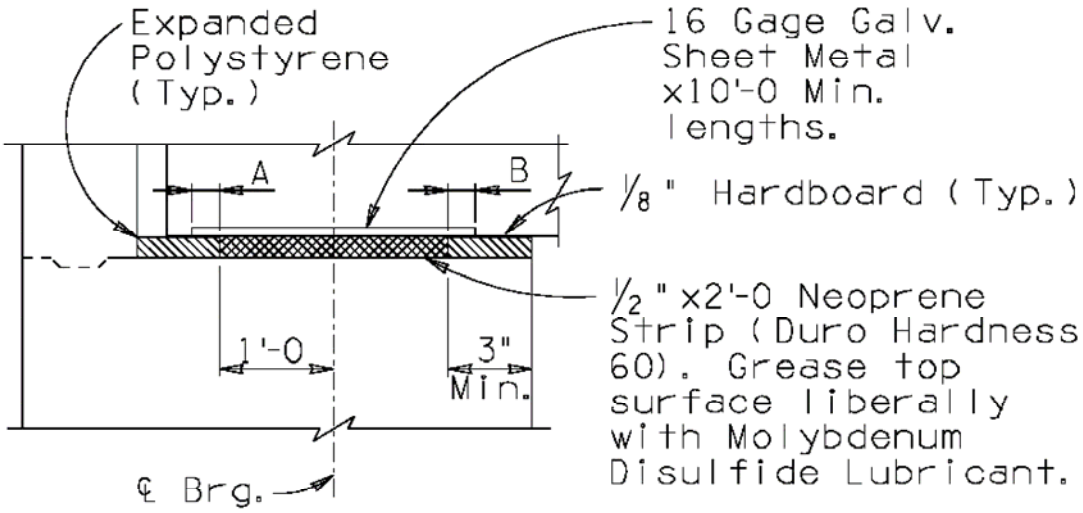

SECTION A-A

No Scale

A = Movement due to temperature fall + rise + prestress shortening (elastic + long term) + 1" Min.

B = Movement due to temperature rise + fall + + 1/2" Min.

Exhibit 601-3.09-4 Neoprene Strip Details

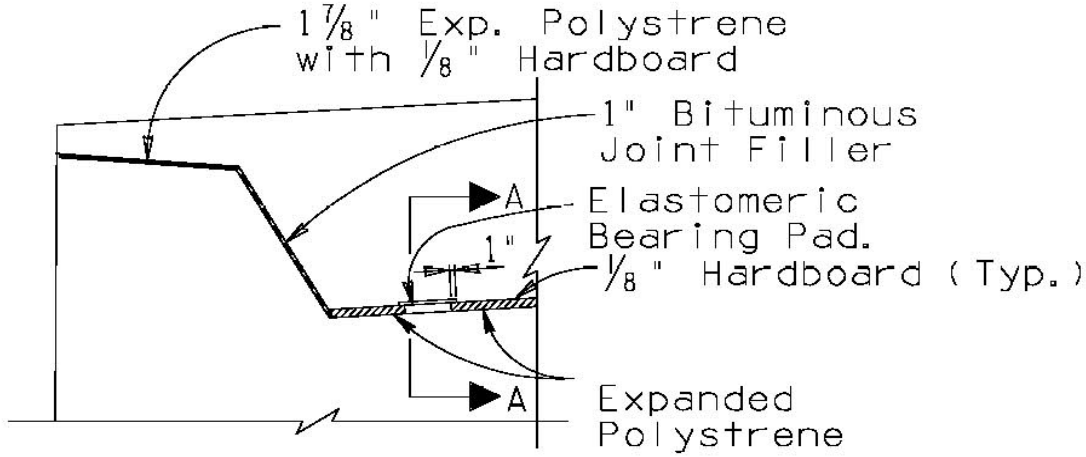

PARTIAL ELEVATION

No Scale

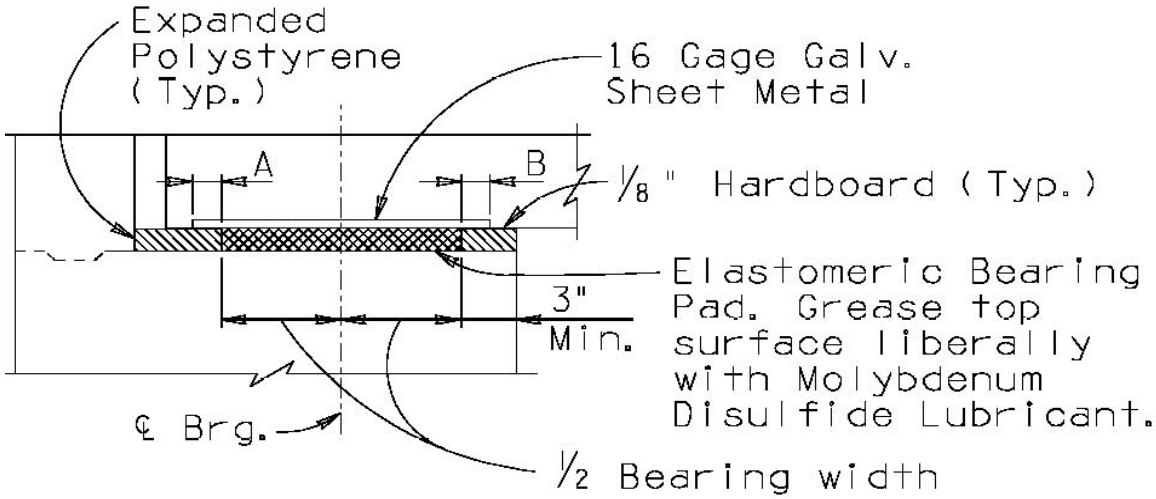

SECTION A-A

No Scale

A = Movement due to temperature fall + prestress shortening (elastic + long term) + 1" Min.

B = Movement due to temperature rise + 1/2" Min.

Exhibit 601-3.09-5 Elastomeric Bearing Pad Details

Bearing pads can only carry so much load before they loose the ability to flex. When a bearing pad is required to carry heavy loads, the Designer may specify pot, disc, or spherical type bearings. These are sophisticated types of bearings that must be pre-approved and tested prior to installation.

The wide variations in bearing designs do not permit a more detailed discussion on bearing types and installation requirements. However the Inspector should follow these general rules when inspecting all types of bearing pads:

1. Consult the Project Plans and Special Provisions first.

   Most of the installation and material requirements will probably be found in these two documents. You should clearly understand how the bearings will be placed on the pier or abutment and how they will be connected to the bridge girders.

2. Bearing pads must be made of material acceptable to the Department.

   The Special Provisions or Section 1013 specifies the material properties for bearing pads. Bearing pads have strict material requirements that must be adhered to in order to achieve a long lasting, low maintenance service life. Bearing pads are sampled by the Inspector in accordance with the Sampling Guide and sent to ADOT Materials Group for testing.

3. Bearing pads need to be level.

   Bearing pads are intended to be a plane level surface that the girders and bridge superstructure can slide upon. Unlevel bearing pads, especially when the bridge has a superelevated deck, may cause the girders to slide right off the pads to the bridge pier or abutment concrete. This could restrict expansion and contraction of the superstructure that may crack the bridge.

4. Bearing pads must be oriented in the right direction.

   The correct direction is the direction shown in the Project Plans with the markings on a visible face per Subsection 1013-3.01(C). Sometimes this is parallel to the girder line. Other times, they are set in the same direction as the abutment. For bridges with extreme skew the bearing pads are usually aligned in the same direction as the girders, regardless of the angle created between the bearing pads and the abutments or piers. Incorrectly oriented bearing pads can cause the superstructure to slide off the bearing pads just as easily as unlevel pads. Any ambiguity as to how the bearing pad should be oriented should immediately be brought to the attention of the Designer.

5. Bearing pads must be set in the correct positions with the correct offsets.

   The Project Plans will show the exact location and orientation for each bearing pad. The Inspector should carefully consider how each pad would be placed, in what position it will be, and whether it will function as intended. Any confusion on how the pads are to be positioned should be clarified with the Project Supervisor or the Bridge Designer.

On post-tensioned box girder bridges, the galvanized steel plate that is cast into the superstructure will not be centered over the neoprene strip. There will be a slight offset to account for the shrinkage of the superstructure after post-tensioning. The Inspector should ensure this offset is built into the bearing assembly. See Section A-A of Exhibit 601-3.09-4. Other types of bearings used for this application should have a similar kind of offset. See Section A-A of Exhibit 601-3.09-5.

Jacking up a bridge superstructure to replace faulty bearing pads is an expensive undertaking. Inspectors must properly inspect, sample, and test bearing pads. The Special Provisions or Section 1013-3 describes the sampling and testing procedures the Contractor and the Inspector must follow.

601-4 Tests on Finished Structures

601-4.02 Dimensional Tolerances

Section 601-4.02 lists a variety of dimensional tolerances required for each member of a concrete structure. The Inspector must verify that each construction tolerance is met by taking the appropriate measurements in the field. For some tolerance measurements, you may need the assistance of a survey crew or special equipment such as a straight edge.

Dimensional tolerances are very important in structural concrete construction because:

- structural members that are too thin may have inadequate load carrying capacity;
- members that are out of tolerance in elevation, plumbness, or horizontal alignment can result in high stress concentrations in other members or within the member itself;
- members that are at the incorrect elevation may require the elevation difference to be corrected in other members that throw them out of dimensional tolerance;
- members that are too big may add additional loading to the structure unforeseen by the Designer; and
- members with too much dimensional variation may appear unsightly to the traveling public.

For example, a girder seat that is too low may require more deck buildup in order to get the riding surface at the correct grade. A column that is too out of plumb can result in severe stress concentrations in the pier cap or footing that may crack these members under normal loading.

Precast members have dimensional tolerances that are very important for the same reasons cited above

601-5 & 6 Method of Measurement & Basis of Payment

Concrete structures are typically measured and paid for on a lump sum basis. Minor precast structures (catch basins, manholes, etc.) are usually paid for on a unit or "each" basis. Subsection 109.10(A) of the Special Provisions will list major structures or groups of structures that must be paid on the basis of Lump Sum. Major concrete structures such as bridges and box culverts are usually measured and paid separately as one “lump sum structure” item. Each lump sum structure may have separate bid sub-items for girders, structure backfill, reinforcing steel, vertical restrainers, and other bridge components. These sub-items are intended to provide a means of measuring and paying for a partially completed structure on a monthly basis. The structure is still paid for as a lump sum with the total of the sub-items equaling the lump sum amount. The sub-items help track significant overruns or underruns in quantities that may require adjustments under Subsection 109.10.

When a structure is founded on drilled shafts or piling, separate bid items will be listed for these types of foundation. These bid items are not considered to be part of the lump sum structure amount. The work is paid for separately based on the actual quantities used. The project bidding schedule will show these bid items below the lump sum bid item for the structure.

There are three types of price adjustments allowed to a lump sum structure. The first type is due to strength deficiencies in the structural concrete. This is specified in Subsection 601-6. Subsection 1006-7.06(B) can be used to resolve strength deficiencies. The other two adjustments are due to quantity variations discovered

during construction or to adjustments ordered by the Bridge Designer. These are specified in Subsections 109.10 (B) and (C).

Quantity variations during bridge construction are not uncommon. It is recommended that the Inspector and the Project Supervisor closely monitor pay quantities. Some suggestions are:

- count all vertical restrainers and bearing pads that go into the structure;
- collect tickets from all concrete pours and document the quantities;
- retain the cut sheets for all the reinforcing bar placed;
- note any forming deviations and elevation differences that are consistently on the high or low side of the tolerances specified in Subsection 601-4.02;
- note any excessive form deflections during concrete pours;
- track the amount of rebar and wasted concrete left over after completion of key structural members; and
- spot check the dimensions of completed structural members (walls, decks, slabs, abutments, footings, etc.) and compare them with the dimensions shown on the Project Plans.

Subsection 109.10 of this manual further discusses how to handle quantity variations in lump sum structures.

602 PRESTRESSED CONCRETE

602-1 Description

Prestressed concrete construction is specialized work done by experienced crews trained for this type of work. Although the responsibility for prestressing lies with the Contractor, it is important that the Resident Engineer and the Inspector are familiar with the operation.

Prestressed concrete is different from reinforced concrete in that an initial compression load is applied to the structural member. This *prestress* is applied by means of steel strands that run through the structural member. Placing an initial compression stress in a structural concrete member allows it to carry greater loads than normally would be achieved by adding more reinforcing steel. The idea is to keep the structural member from experiencing any tension stresses that might crack the concrete. The higher the compression stress induced into the concrete, the more load the member can carry before going into tension and cracking. ADOT uses prestressed concrete for most bridge girders and sometimes for pier caps and deck slabs. Prestressing allows for lighter and stronger concrete members that do not crack easily.

There are two methods for prestressing concrete—pretensioning and post-tensioning. Precast concrete girders are pretensioned, while cast-in-place box girders are post-tensioned.

Pretensioning involves running steel strands along the length of the member to be prestressed. The strands are initially tensioned to a predetermined stress. This causes the strands to stretch. Concrete is then poured all around the strands. Once the concrete has hardened and gained sufficient strength, the ends of the strands are cut. The strands inside the concrete member try to relax and shorten. However there is now concrete bonded to the strands. As the strands shorten, they push the concrete together and induce a compressive stress into the concrete.

Post-tensioning involves running steel ducts through the concrete members. Special anchors are placed at each end of the member. Then concrete is poured around the ducts and the anchors. Steel strands are run through the ducts. Once the concrete is strong enough, the strands are pulled at one end while anchored at the other. Pulling (or jacking) of the strands causes the ends of the concrete member to push toward each other. This induces compressive stresses along the entire length of the concrete member. After jacking, grout is injected into the ducts then concrete is poured around the ends of the anchors. Once the grout gains strength, the strand is now bonded to the concrete member in a way similar to pretensioning.

The results of pretensioning and post-tensioning are the same. Compressive stresses are induced into the concrete member. The differences are in the technique used to induce the prestressing.

Prestressed members require the use of additional reinforcing steel. Extra steel is used to control certain types of cracking near the end of a prestressed member.

602-2 Materials

Prestressing Strand

The Department allows two types of prestressing strands. For precast girders, seven-wire, high-tensile 0.5-inch (12.54-mm) strands are used. For cast-in-place box girders either 0.5-inch (12.54-mm) or 0.6-inch (15.24-mm) strands are used with the 0.5-inch (12.54-mm) strand being the most preferred.

Prestressing strand is more susceptible to corrosion than rebar and should be treated accordingly. After the packaging has been removed from the reels containing the prestressing steel, the reels should be kept off the ground on blocks or timbers and covered with a tarpaulin. The tarpaulins should be wrapped loosely around the reels to permit air circulation and avoid moisture build-ups due to condensation.

The following criteria is a guide for the acceptance or rejection of the prestressing steel strand:

1. Steel that has a thin rust film, removable by light rubbing and leaving only light streaks or spots but no pitting, need not be rejected.

2. If there is an even coating of rust over the entire reel when it is opened, the reel should be rejected.

3. The reel should be rejected if one or more wires in a strand shows extensive rust throughout its length.

4. Any section of strand or wire that contains clinging rust, pits, or other faults should be discarded.

Concrete

Good concreting practices in regards to mixing, placing, and curing are a prerequisite to any prestressing operation. Uniformity and consistency of the concrete is especially important. Variations in concrete properties can lead to excessive camber deflection and pronounced long term creep of prestressed concrete members. The Inspector should carefully monitor batching and placement procedures and reject all concrete that fails to meet slump or other placement related specifications.

602-3 Construction Requirements

602-3.01 Shop Drawings

Extensive shop drawing submittals are required for all prestressed concrete members. The Contractor will submit drawings showing the location of all prestressing strands and detailing any additional hardware needed to secure or anchor the strands to the concrete member. The shop drawings should include:

- a scaled composite drawing showing strand and hardware locations;
- the jacking method and sequence;
- the strand type, size, location and number of strands;
- a calibration chart for the jack, including a calibration certificate that is no more than two years old;
- elongation and stress calculations; and
- details on additional hardware such as plates and bars.

Additional requirements for pretensioned concrete members (precast girders) include:

- the location of all harping points and other hold down locations;
- the location of all lifting points and lifting hardware details; and
- the type of finish on the tops of the girders.

Additional requirements for post-tensioned concrete members include:

- anchorage design details including bursting diagrams and stress calculations;

- duct layout details and vent locations;
- post-tensioning sequence;
- grouting procedures; and
- an approval letter from a recognized authority on post-tensioning systems that conforms to the requirements of subsection 602-3.02.

The Resident Engineer should verify the submittal is complete with all of the required drawings, calculations, and details before sending to the Bridge Designer for review.

Reproducible shop drawings (mylars or sepias) of all prestressed concrete members must be included with the as-built plans when the project is finalized. A set of reproducible drawings should be included in the contractors working drawing submittal (refer to Subsection 105.03).

Hardware Installation

The Contractor is responsible for furnishing hardware that will withstand the prestressing loads transferred from the strands to the concrete girders. The hardware requirements are shown in the approved post-tensioning shop drawings. The Contractor will provide calculations with the shop drawings showing the transfer stresses in the hardware and how the hardware was sized and selected. It is important for the Inspector to ensure that all the hardware shown in the shop drawings is incorporated into the girders. Sizes, spacing, and material grades should all be checked carefully.

A transition cone, usually referred to as a trumpet, is placed at the end of the duct at the bearing plate. The size and the length of the trumpet varies with the size of conduit and the jacking system used. The trumpet section is used because the area of the duct is much smaller than the area of the hardware needed to tension and anchor all of the strands in the duct.

The girder webs are usually flared at the ends to accommodate the trumpet sections and to provide enough concrete cover. The amount and length of the flared section will depend on the prestressing system and size of duct used. The alignment between the duct and trumpet section is critical. A smooth connection is required or problems may arise while tensioning or grouting. The joints between the duct and trumpet must be sealed in the same manner as the other duct joints.

Openings for the injection of grout are placed at the bearing plates and are usually connected to the trumpet cone. The connection is generally brazed, watertight, and must be able to withstand the grout pumping pressures. The grout ports and vents must be anchored securely to the forms or rebar to prevent displacement during the concrete pour.

602-3.02 Approval of Prestressing Systems

When precast girders are used, ADOT's Material Group will approve the pretensioning system. For cast-in-place box girders, the Bridge Designer will approve the Contractor's post-tensioning system.

For post-tensioning, the Inspector should have copies of the approved post-tensioning drawings and calculations. It is important for the Inspector to verify that the Contractor closely adheres to the approved shop drawings. The structural integrity of the entire bridge is dependent on the post-tensioning system. Even the slightest deviation from the approved shop drawings or Project Plans can have serious consequences for the long-term performance of the structure. Daily inspections of post-tensioning hardware (ducts, bearing plates, trumpets, bolts, and bars) during installation are required. Spacing, location, sizes, and material requirements

are key inspection areas. Inspectors should strictly enforce the installation tolerances shown in Subsections 601-4.02 and 602-3.05.

602-3.03 Sampling and Testing

Inspectors are required to sample each reel of prestressing strand that arrives on the project site. Steel bars, wires, and couplers should be sampled at the rate shown in the Standard Specifications. Steel plates should be sampled at the rate shown in the Sampling Guide. Testing is usually performed by the Structural Material Testing Section of ADOT's Material Group.

Certificates of Compliance must accompany all prestressing materials. All materials are required to have a lot number assigned by the manufacturer that must be referred to on the Certificate of Compliance. The Inspector should document where these materials are placed in the structure and should not allow any materials to be used that are not properly tagged and certified.

602-3.05 Duct Installation for Post-Tensioned Structures

Ducts are generally placed after the stirrups are in place in the girder webs and before the side forms have been placed. The utmost care must be exercised in the storage, handling, and transporting of ducts, as they are relatively flimsy compared to other bridge components and damage easily.

Two types of ducts are used in bridge construction. Smooth wall rigid conduit is made from galvanized strip steel held together longitudinally with a continuous resistance weld or a continuous interlocking seam. They are normally furnished in 20-foot (6-meter) lengths with one end of each length enlarged to form a slip type connection. The other type of duct is galvanized ribbed sheet steel with helically wound interlocking seams. It is generally furnished in 40-foot (12-meter) lengths and connected by larger rigid conduit couplers.

All of the joints in the duct, whether they are couplers or interlocking seams, should be taped with durable waterproof tape to prevent the intrusion of mortar while placing concrete. A careful inspection should be made at all joints to verify they are well sealed to prevent problems due to a plugged duct.

The correct positioning of the ducts is most critical at the high and low points of the duct profile and at the points of contra-flexure. The profile between these points should form a smooth parabolic curve. As discussed in Subsection 602-3.02 of this manual, strict adherence to installation tolerances is extremely important. Misaligned ducts can severely affect the amount of prestressing transferred to the bridge structure. Ducts that are installed too low in a girder can cause additional uplift stresses on a post-tensioned bridge that can crack the bridge deck and tops of the girder webs. On the other hand, ducts installed too high can cause a post-tensioned bridge to sag due to a lack of adequate uplift stress.

The horizontal alignment of the ducts is important and should be carefully checked. Ducts that are out of horizontal alignment can cause a wobbling effect on the girder webs when they are post-tensioned. This effect can cause the girder webs to twist out of alignment resulting in severe cracking and even spalling of the web concrete around the ducts.

The ducts should be tied securely (vertically and horizontally) to the stirrups and other rebar to prevent displacement during the concreting operation. Ducts have a tendency to float during concreting causing the joints to open up if the conduit is not properly secured.

Grout vents are usually attached to the ducts by brazing or using metallic structural fasteners. The vents should be mortar tight and taped when necessary to prevent the intrusion of mortar. Grout vents are used to ensure that a steady and continuous flow of grout is being pumped through the duct. Vents must be placed according to the approved shop drawings that are usually within 6 feet (2 meter) of the high point of the duct profile in continuous structures. Grout vents may be placed at the low points of the duct profile. Usually this is not done unless specified because of the difficulty in access due to falsework obstructions. The advantage of using low point vents is to allow water that has collected in the ducts to drain.

Ends of the ducts should be covered after installation to prevent entry of water and debris.

Duct Inspection

After the installation of the ducts, rebar, and forms, a thorough inspection should be made to locate possible duct damage prior to placing concrete. The Inspector should be aware of the most common sources of duct damage. Some of the common forms of duct damage are:

- separation due to dragging the duct;
- punctures due to threading rebar;
- indentation due to dropped rebars;
- indentation due to workmen walking on, or placing equipment or material on the ducts; and
- punctures caused by carpenters drilling forms for snap ties while buttoning up side forms.

Two alternative methods that have been successfully used to locate duct damage prior to concrete placement are described below:

Method No. 1:

Through visual inspection by the use of angle-mirrors and flashlights.

Method No. 2:

Check the ducts with compressed air. This method is described as follows:

While introducing a large volume (3 cubic yards per minute) of air continuously at one end of the tendon (note the dynamic pressure on a gauge at the opposite end). Since the duct is not closed, no specific gauge pressure is required. Large holes or openings in the duct will allow more air to escape than an undamaged duct and will result in a lower dynamic air gauge pressure. It is necessary to compare the noted pressures between similar tendons.

Any large holes or openings can be located by the disturbance (sound, dust, etc.) caused by the escaping air.

After inspection of the ducts, all holes or openings found in the ducts must be repaired prior to concrete placement. The following methods of repairing damaged ducts can be used as a guideline. Holes less than 1/4 inch (6 mm) can be repaired by several wraps of waterproof tape. Holes or openings larger than 1/4 inch (6 mm) should be repaired with a split metal sleeve extended at least 3 inches on each side of the hole. The sleeve should be secured to the duct and be sealed with waterproof tape. Extreme care must be exercised while repairing damaged ducts so there is no further damage.

Duct Protection During Concrete Pours

After a thorough inspection of the ducts, hardware, rebar, and forms, the bottom deck and webs of the bridge can be poured. Problems often occur while pouring the webs and the Contractor must exercise extreme care in placing and vibrating the concrete. Generally with the ducts installed, there is not much room in the webs to place and vibrate the concrete. Unless the utmost care is exercised, honeycomb or complete void areas may result. Consolidation of the concrete is especially important around the trumpets since most of the prestressing loads will be transferred to the concrete in this area. Damage to the ducts can occur from wedging the vibrator against the duct. Pencil vibrators are sometimes used and recommended when there is a high risk of getting the vibrator jammed between the reinforcement and the ducts.

All of the web walls must be checked after the forms have been removed. Any honeycomb or void areas must be repaired. Minor imperfections can be repaired by chipping away the defective area and patched in a manner approved by the Resident Engineer. The size of the damaged area will govern the materials used for patching. If the Resident Engineer deems that the integrity of the member has been affected by extensive honeycombing, part or the entire web may have to be removed. The Contractor must be careful and not damage the duct while chipping defective concrete.

Duct Blockages

Before closing the bridge cells to construct the top deck, the ducts must be tested again to verify there are no holes in the duct and that the ducts are unblocked. A common way to verify that the ducts are unblocked is to blow an object (a rubber ball is excellent for this purpose), slightly smaller than the inside diameter of the duct, through the duct with compressed air. If the object cannot be blown completely through the duct, the duct has a blockage and the location of the blockage must be determined and corrective measures must be taken (repair the duct). A method of checking the amount or size of blockage is to use smaller diameter balls to see if they can be blown through.

Sometimes blockages can be removed by see-sawing a strand back and forth in the duct. However be careful not to damage or nick the strand while trying to clear the duct. If this method or any other method the Contractor uses is not effective then the blockage must be repaired by chipping the girder web before the top deck is poured.

Pressure Testing

Once the Inspector is satisfied that all possible blockages have been investigated and repaired, the Contractor must demonstrate to the Department that the ducts will not leak. This is done by pressure testing the ducts. Either air or water is pumped into a closed duct until the “charging pressure” is attained, then the valve is shut-off and the “retained pressure” is measured after five minutes. The specified charging and retained pressure depends upon whether the duct will be partially, or completely encased by concrete during the pressure test. Ducts that are not completely encased in concrete must have exposed areas sealed with epoxy before pressure testing.

If the performance of the pressure test is unacceptable, the Contractor must take some action to find and repair any leaks. If after testing, the duct is still unacceptable, the Resident Engineer has the option of approving the ducts or requiring more repairs.

It should be a very rare occasion when a Resident Engineer approves a post-tensioning duct that fails the pressure test. The Resident Engineer should insist that the Contractor make all the necessary repairs to fix any

leaks. Once the deck forms are placed and the deck poured, it is much more difficult to access the girder webs to repair any leaking ducts.

If you find a duct that cannot pass the pressure test, some steps you can take are:

- try switching between the two types of pressure test (water vs. air);
- air test during the very early morning when it is quieter;
- hydrostatic test the duct for several hours (the leaking water will eventually reveal the location of the leak); and
- use dye in the water to make it easier to trace the leak (be careful about staining all exposed concrete).

Occasionally the Contractor will have made a good faith effort to fix all the leaks but the duct may still fail the pressure test. If this is the case, the advice of Bridge Group and the Bridge Designer should be sought prior to approving the duct.

After all the ducts have been checked for blockages and leaks, the cells can be closed and the top deck can be poured. The strands may be placed in the duct prior to pouring the top deck. However the strands should be protected from rust by using an approved corrosion inhibitor. The better method is to install the strands after all of the concrete has been placed and has developed the required compressive strength for tensioning.

602-3.06 Prestressing

The following terms should provide the Inspector with a better understanding of the concept of prestressing:

1. *Anchorage Device*

   The hardware assembly at the ends of each post-tensioning duct used for transferring a post-tensioning force from the strands to the concrete.

2. *Curvature Friction*

   The friction resulting from bends or curves in the specified post-tensioning duct profile.

3. *Effective Prestress*

   The stress remaining in the concrete due to prestressing after all losses have occurred excluding the effects of dead load and superimposed loads.

   Effective Prestress equals Jacking Stress minus Loss of Prestress

4. *Friction (Post-Tensioning)*

   The surface resistance between the strands and duct in contact during post-tensioning. It includes curvature friction.

5. *Jacking Force (P_{jack}) or Jacking Stress*

   The temporary force exerted by the jack that introduces tension into the strands.

6. *Loss of Prestress*

The reduction in prestressing force resulting from the combined effects of:

- elastic shortening of the concrete and rebar due to the jacking force;
- relaxation of the strands;
- friction;
- anchorage losses due to seating of post-tensioning strands and movement of the anchorage device; and
- long term creep and shrinkage of the concrete.

7. *Pre-compressed Zone*

That portion of the flexural member's cross section compressed by the post-tensioning force (P_{jack}).

8. *Relaxation of Tendon Stress*

The time-dependent reduction of stress in the strands at a constant strain.

9. *Tendon*

The post-tensioning duct and the strands and grout within the duct used to impart a prestress to the concrete or each strand in a prestress, precast concrete girder.

10. *Wobble Friction*

The friction caused by the post-tensioning ducts (or the stands in precast girders) that are misaligned (horizontally and vertically) from their intended alignment and profile. (This is the primary reason ADOT requires formwork drawings for interior girder webs on post-tensioned bridges.)

Prestressing takes place in two increments. The first increment, referred to as the initial pull, is applied to straighten the strands and to eliminate slack. The initial pull is usually between 5 to 10 percent of the initial stress and can be applied either by a hydraulic jack equipped with a pressure gauge or load cell or by a fence stretcher and dynamometer.

Immediately following the initial pull, the Contractor must mark both the dead ends of the strands for slippage and the stressing end for elongation measurements. If spliced strands are used, the splices must be marked for slippage.

After the reference marks for elongation and slippage have been placed, the strands can be tensioned and anchored at the required initial stress. The jacking stress must be applied with a hydraulic jack equipped with a pressure gauge or load cell.

At the end of the stressing operation, the elongation must be measured and compared to the theoretical calculated elongations. The calculations must be submitted to the Bridge Designer for approval. In pretensioned members, each strand elongation should be recorded. For cast-in-place post-tensioned members, the elongation of the strand group in each tendon should be recorded.

(A) General

Prestressing Equipment

Each jack must be equipped with either a pressure gage, or a load cell with a digital display that is readable at a distance of 10 feet. Pressure gauges used for measuring the stressing load should have a dial at least 6 inches (150 mm) in diameter, and increments with an accuracy within 2 percent. Gauges must be calibrated by an approved laboratory prior to being used. A certified calibration curve should be furnished by the laboratory for each gauge and jacking device. Gauges should be calibrated for the jacks they are to be used with.

Gauges should read in pounds (newtons) or be accompanied by a chart from which the dial reading can be quickly converted to pounds (newtons). All gauging devices should be recalibrated at least as often as specified. During the post-tensioning, if any gauging system appears to be giving erratic or erroneous results or if the gauge readings and elongation measurements indicate materially different stresses, the jack and gauges should be recalibrated.

Welding

Welding should not be permitted in the vicinity of any prestressing strand, steel, or duct. Spatter from welding can pit the steel wire. Very minor pitting can cause failure of the strand even at a low stress. Damage of this type is extremely difficult to detect so adequate precautions must be taken when welding near any strands.

(B) Pretensioning Precast Concrete

In precast girder manufacturing long pretensioning beds are generally used allowing several members to be made with one strand. The tension must be the same for each member but when strands are draped, friction develops during stressing at hold-down or hold-up points that may reduce the tension in the members toward the non-jacking end. This stress reduction should be checked by computing the elongation of some convenient lengths, say 20 to 25 feet (7 to 10 meters), which may be measured on a straight section of strand near the non-jacking end. The length should be marked on the strand in two or three locations before stressing. Then, after stressing, the elongations are determined and compared. Corrective measures should be taken if results indicate non-uniformity of tension.

The usual procedure for stressing is to place a small initial stress, about 5% of the total, into the strands before marking them for elongation measurements. This is to take the slack out of the strands, seat the opposite end anchor, and tighten up the bearing surfaces. The initial stress produces some elongation. The manufacturer's recommended modulus of elasticity should be used in all elongation computations. One set of stressing calculations may be used for more than one member, if the members are identical. However the Inspector should be satisfied that the stressing setup is the same for which the calculations are based.

The strands should not be tensioned more than 72 hours ahead of placing the concrete.

Metal chairs or small precast concrete blocks may be used to support the strands and stirrups.

Reinforcement and Anchorage Details

The centerline of bearings or the beam centerline should be marked on the form soffit and used as a reference for spacing of stirrups, drape supports, bearing devices, diaphragm connections, etc. Tack welding of reinforcing steel will not be permitted unless approved in writing by the Resident Engineer. If the Contractor requests to

tack weld, the proposal should be included with the shop drawings. Details provided in these drawings should include compliance with ASTM A 706 for welding rebar.

Positioning of the reinforcing should be performed carefully to make certain that the correct distance from the forms is maintained. End bulkheads and bearings should be set out far enough to compensate for elastic shortening of the member when tension is released.

The alignment of prestressing anchorages to ducts is critical. As a general rule, the anchorage should be within 2 percent of perpendicular to the centerline of the duct. Larger variations can cause failure of the strands due to shifting of the stressing head toward the centerline of the duct.

Placing Concrete (See Sections 601 and 1006)

The Inspector should not permit the placing of concrete in any member until the forms, reinforcing steel, and prestressing strands have been verified for compliance with the Standard Specifications and the approved working drawings. When the forms or the steel are hot, they should be sprayed with water ahead of the placement of concrete.

The consistency of the concrete should be closely controlled through frequent moisture tests of the aggregate and slump tests of the concrete. No more water should be used in the mix than is necessary for good placement. Inconsistent concrete produces large variations in girder camber growth. These variations can result in significant changes for both deck build-up and deck concrete quantities that have not been anticipated by the Designer and reflected in the Project Plans.

Concrete should be deposited in its final position as nearly as possible without resorting to moving the concrete appreciably by use of vibrators. Concrete should be placed in at least two continuous horizontal layers for "I"-shaped beams of depths not exceeding 3 feet (1 meter) and at least three such layers for beams of greater depth. The first layer of concrete should completely fill the bottom flange and extend 2 to 4 inches (50 to 100 mm) up into the web.

Care should be exercised to see that all parts of the forms are completely filled with concrete. The coarse aggregate should be worked away from the form faces by use of the vibrators and spades. The concrete should be worked under and around the prestressing tendons and the reinforcing bars without moving them. There should be at least one spare vibrator in case of a breakdown.

Unless otherwise specified on the Project Plans, the top surface of I-beams, box beams, and flat slabs must be roughened with a hand tine rake while the concrete is still plastic.

Concrete Tests

Compression tests are important in prestressing because they determine the time of detensioning or post-tensioning. They show the ultimate strength of the concrete. This makes it more imperative that the sampling, handling, fabrication, curing, and testing shall be in strict conformance with the Materials Testing Manual.

Field cure the cylinders in the same manner as the members are cured. The cylinders should be placed in areas representing the average curing condition of the member or members that they represent. All other cylinders are to be cured and stored according to standard procedures.

Curing (See Subsection 1006-6.02)

Ordinary moist-curing methods are satisfactory if properly performed. Accelerated curing to increase the production of precast members is often used. However steam curing is the most common method.

Steam curing must be performed properly to accomplish the desired results. However even under the best control, there is a loss in ultimate strength of 5 to 15 percent when compared with good moist-curing. The rate of temperature rise, the average temperature, the maximum temperature, and the rate of drop in temperature must be carefully controlled to keep strength loss to a minimum. The rate of rise in temperature of the air surrounding the concrete member should not exceed 40 °F (22 °C) per hour. Maximum temperature must not exceed 175 °F (79 °C), and the average temperature must not exceed 160 °F (71 °C). Effective acceleration in the curing is not accomplished unless the temperature surrounding the member is above 120 °F (50 °C). The rate of cooling should not exceed 40 °F (22 °C) per hour. Usually 12 to 18 hours at a temperature near 160 °F (71 °C), will result in the required minimum strength of release of the tendons. Coverings or hoods over the members should be at least 6 inches (150mm) above the concrete surface to provide circulation, and be secure enough to prevent heat and moisture loss.

Stress Release

The required compressive strength for stressing the concrete, as indicated by cylinder strength tests, must be reached before this operation is permitted to begin. For members cast end-to-end on a pretensioning bed, the strands should be cut in a pattern and at selected locations along the bed so as to keep the eccentricity of stress loading and longitudinal movement to a minimum. If some of the strands are draped, they should be cut first then the hold-down apparatus released. The straight strands should be cut last.

If the hold-downs are released first, the beam may camber up and crack due to the end moments. If the straight strands are cut first, the unbalanced pull on the beam might shear off the hold-down bolts with resulting damage to the beam and casting bed.

Inspection

Each member should be inspected carefully for conformance with the requirements of subsection 602-3.08 of the Standard Specifications. The following are among the important features that should be checked:

- concrete cleaned off of exposed reinforcing bars;
- spacer holes and form tie holes should be repaired;
- tendons should be trimmed at the girder ends; and
- any necessary finishing and patching done.

The Project Plans may require the Contractor to monitor the camber growth of each girder. This can be done by taking elevation readings with a level along the bottom flange of the girder. Only three shots need to be taken; one at each end of the girder and one at the midspan. If the girder will remain undisturbed, only a single elevation reading is needed at midspan. These readings should be done immediately after the girder is removed from the casting bed and again just prior to shipping. The camber growth rate is simply the change in the midspan elevation divided by the elapsed time between the two sets of readings. This information should be given to the Bridge Designer who can check the design assumptions concerning camber growth. Camber growth serves as an early warning to the Designer about potential deck build-up problems before much of the deck formwork is placed.

Beams should be inspected for voids or honeycombs before they are shipped or erected. Small voids or honeycomb on the sides of beams may be repaired and accepted if the repair work is performed and properly cured before any stress is released.

Small voids or honeycomb in the bottom of a beam may be repaired and the beam accepted under the same conditions except when the voids are over or near the bearings. Voids or honeycomb in the bearing areas should be considered probable grounds for rejection of the beam. The Resident Engineer should investigate the defect and request the assistance of the Materials Group and Bridge Group.

Transporting

Transporting and erecting precast, prestressed girders are the responsibility of the Contractor. A permit is usually required from MVD to haul girders on ADOT highways. Municipalities and county governments may require additional permitting.

Various kinds of devices are anchored in the concrete for the purpose of lifting the members. The members should not be lifted in any way other than by use of the lifting devices provided. Members should always rest in an upright position setting on blocks located near the ends—just as they would be sitting when installed in the structure. The Inspector should observe the handling of the members but the prime responsibility for proper handling is the Contractor's. The Inspector should record and report any suspected improper handling or damage to the Resident Engineer.

Girders that fall on to their sides or are completely flipped over are usually severely damaged. This is due to the fact that the weight of the beam offsets the bowing action of the prestressing strands. This bowing action gives the girder its camber. If the beam falls on its side or is flipped over, there is nothing restraining the bowing action of the strands. The girder will arch until it cracks all the concrete around the strands. The strands then become de-bonded causing the girder to lose most of its prestress.

(C) Post-Tensioning Cast-in-Place Concrete

Time and Curing Requirements

Tensioning cannot take place until the required concrete compressive strength has been reached for jacking and seven calendar days have passed since the last deck concrete has been placed. The seven day requirement cannot be waived even if the concrete cylinders meet the strength requirement in less time. The seven days ensure the concrete has matured enough so that it will not be susceptible to excessive long-term creep after post-tensioning. Young concrete can creep excessively when loads are applied too early causing the bridge superstructure to sag with time.

Once these requirements have been met, the stressing operation can be started. Compressed air will generally blow most of the water out of the ducts.

Installing the Strands

The strands may be placed in the duct prior to pouring the top deck, or after completion of concrete curing. The better method is to install the strands after all of the concrete has been placed and has developed the required compressive strength for tensioning. For protection of the steel from corrosion, the Standard Specifications state that the prestressing steel placed after curing is acceptable if it is tensioned and grouted within ten calendar days after placement of the steel in the ducts. Usually this is not a hardship on the Contractor because ten days is

generally sufficient time to tension and grout tendons. Strands placed prior to curing must be protected from rust by using an approved corrosion inhibitor, and the contractor must demonstrate that strands are free and unbonded in the duct before tensioning. The Resident Engineer should be notified when the Contractor runs into these difficulties. The Engineer should obtain advice from the Bridge Group, and the Bridge Designer before allowing the contractor to make any attempt to free a bonded strand. If the Contractor fails to meet the corrosion requirement, then it is left to the judgment of the Inspector whether to re-inspect the prestressing steel for rust.

There are many methods employed in the installation of the prestressing steel in the ducts. The strands must first be pulled from the reels and cut to the required lengths needed for tensioning. Care must be exercised while laying out the strands to prevent them from collecting foreign material. The strands must be clean when installed in the ducts. Stringing the strands over blocks of wood is one effective way of keeping the strands off the ground and free of dust and dirt. The strands cannot be cut with an acetylene torch. An abrasive bit can be used as long as a clean cut is made to allow the prestressing steel to fit through the hardware being used.

The prestressing steel is installed by first blowing a piece of tie wire, nylon cord, or cable through the duct. This may or may not be adequate to pull all of the strands through the duct. If it is not, a heavier cable capable of pulling all the strands is fed through the duct.

A winch is the most common piece of equipment used in pulling the strands. The required numbers of strands for each tendon are pulled using a kellum grip placed over the ends of the strands.

On occasion, the Contractor will fail to place the correct number of strands in the duct. If this happens, the Contractor must add or take out strands until the correct amount is in the duct. This can be an extremely difficult process.

Split wedges are the most common means used for holding the strand during stressing and for the final anchorage of the strands in the bearing plate after stressing. All of the friction wedges have teeth or small serration's that make small notches on the material being gripped. All wedges and pulling chucks must be kept clean so as not to alter the efficiency of the system.

Post –Tensioning Procedure

The sequence of stressing is shown on either the approved shop drawings or the Project Plans. The sequence of stressing is usually determined by the Designer in order to keep the stresses within a predetermined symmetry about the axes of each member.

The Standard Specifications allow stressing from one end only for simple span bridges. Prestressing continuous structures must be done by jacking at each end of the tendon, unless otherwise specified on the Project Plans. Such stressing need not be done simultaneously even though some Contractors may choose to do so.

OSHA Standard 1926.701(c) prohibits anyone from standing behind the hydraulic jack during post-tensioning. Poorly anchored or broken strands can shoot through the jacking head. The area several hundred feet behind the jack should be kept clear of all personnel. If this is not practical, suitable barriers should be erected to protect adjacent work, passing vehicles, and pedestrians.

The Inspector should measure and record the jacking forces applied to each tendon. A load cell meter is available at ADOT Materials Group for measuring jacking forces during post-tensioning. An instruction manual comes with the meter to calibrate the meter at the project site. The manufacturer's recommended modulus of elasticity should be used in all elongation computations.

The usual procedure for stressing is to place a small initial stress, about 5 percent of the total, into the strands before marking them for elongation measurements. This small initial stress takes the slack out of the strands, seats the opposite end anchor, and tightens the bearing surfaces. The initial stress does produce some minor elongation.

Uniform tension in all of the strands in a post-tensioned tendon is difficult to achieve because of the varying amounts of friction, length, and the modulus of elasticity between the individual strands. Due to inevitable weaving of strands within a tendon, some of the strands may be stressed close to their yield strength before others. This can occur when the jacking force approaches only 78 percent of the ultimate tensile strength of the prestressing strands. Therefore when jacking force exceeds the 78 percent, some of the strands in the tendon may be over-stressed. This is the main reason that the Standard Specifications do not permit stressing beyond 78 percent of the minimum ultimate tensile strength of the prestressing steel (see Subsection 602-3.06[A]).

Elongation Measurements

The stress induced in the prestressing strands must be measured both by gauges and by elongation of the tendons. Occasionally there are differences between the measured elongation and the elongation shown in the calibration chart for a given jacking force. This is because strain (elongation) versus stress (gauge reading) differs due to variations in modulus of elasticity in the steel, variation in tightness of twist in the strands, variations in friction between the supports or ducts, or friction and losses in the jack and pumping system.

If the variation is more than 5 percent, the Contractor must take corrective action before proceeding (see Subsection 602-3.06[A]). This includes finding the source of the error, which could be an improperly seated jack, incorrect assumptions about the amount of twist in the strands, or using the wrong modulus of elasticity. It may even be necessary to have the jacks and gauges recalibrated.

Regardless of the error, it is up to the Contractor to find the source and correct it. The Resident Engineer should be notified when the Contractor runs into these difficulties. ADOT's Bridge Project Engineer and the Bridge Designer should only be contacted after the Contractor has performed all reasonable checks on the post-tensioning operation and cannot rectify the more than 5 percent variation.

If the difference in indicated stress between the jacking pressure and the pressure computed from the elongation is less than or equal to 5 percent, the lower of the two pressures should be increased to the specified value. This would result in a slightly over-stressed strand that is preferable to an under-stressed strand.

Strand Breakage

Occasionally while stressing strands in a prestressed member, a wire in a strand will break. Generally failure of wires is acceptable provided that not more than 2 percent of the total area of the prestressing steel has failed. If a wire failure occurs after the strand has been anchored at its initial stress and the 2 percent criteria has not been violated, the strand should be acceptable subject to approval of the Bridge Designer. If failure occurs while jacking and before initial stress, a new jacking stress can be computed and the strand tensioned to this calculated stress. If failure occurs and the required jacking force cannot be obtained, that strand should be rejected and replaced.

The ends of the stressed strands should not be cut until just prior to grouting so that the Inspector can put reference marks on the strand to note any slippage of strands or failures in the hardware system.

602-3.07 Grouting of Post-Tensioned Members

The purpose of grouting is to have the entire void space within the ducts filled with grout. This protects the tendon from corrosion and continuously bonds the tendon to the girder web.

Just prior to grouting, the strands can be cut and the grout caps installed. The grout injection and ejection pipes should be fitted with positive mechanical shut-off valves. The grout vents should be fitted with shut-off valves. Once this has been done, the tendons are ready to be grouted.

Equipment

The grouting equipment must be capable of continuously mixing and pumping grout that is free of lumps and undispersed cement. The mixing tanks, storage tank, pump, and hoses must be in good working condition to provide a satisfactory grouting job. It is essential that the ducts be free of holes and unblocked to accomplish a good grouting job.

Usually two grout mixers are used. Both discharge into a single storage agitator just prior to pumping. The storage agitator should utilize gravity to feed grout to the pump inlet. This avoids additional air being entrapped in the grout mix if pressurized lines are used. Just before the grout is introduced into the grout pump, a 1/8-inch (3 mm) maximum size screen should be installed to keep any lumps or foreign matter out of the grout mixture. The screen should be easily accessible for inspection and cleaning.

The grout mixers and pump should be driven by separate motors. The pump should have a minimum pumping pressure of 150 psi (1 MPa) with a gauge having a full scale reading of 300 psi (2.1 MPa). Maximum grouting pressure must not exceed 250 psi (1.7 MPa). The pump must prevent any introduction of oil, air, or other foreign substance into the grout and prevent any loss of grout or water.

Standby equipment capable of flushing out any partially grouted tendons must be available at the job site. The standby equipment must be capable of developing a pumping pressure of at least 250 psi (1.7 MPa) with sufficient volume to flush out the duct. Flushing equipment should have a power source separate from the grouting equipment. Any flushing should be from the ejection end of the tendon. The standby equipment should be inspected prior to grouting to verify it is operational.

Materials and Testing

It is necessary to check the consistency of the grout to verify that the correct proportions of materials have been used and that the grout can be easily pumped and will not take a false set in the duct.

The consistency of the grout must be tested with a flow cone (ARIZ. Test No. 311) prior to being introduced into the tendon. Only one test is required per structure since the grouting is usually completed in one day. If grouting is not completed in one day, a test shall be taken at the beginning of each day the Contractor is grouting. The flow time, immediately after mixing, should not be less than 11 seconds. The flow time is defined as the time it takes the grout to discharge from the flow cone. The Contractor should provide initial set times for the grout at various temperatures. The set time can be of extreme value when dealing with leaky post-tensioning ducts.

Procedure

All vents in the tendon should be open when grouting begins. The flow of the grout should be in one direction only. Any intermediate vents must be closed as soon as a steady flow of grout, without any residual water or entrapped air, is maintained. The grout should be continuously wasted at the outlet until no visible slugs of air or

water are ejected. The pumping pressure should then be increased and the inlet valve should be closed. The maximum pressure must not exceed 250 psi (1.7 MPa), and the minimum pressure after one minute must be at least 75 psi (0.5 MPa).

Occasionally the anchor blocks do not make a tight seal with the bearing plates. When this happens, grout leaks may occur. To control leaking, the pumping can be stopped momentarily to let the grout seal the leak. If this procedure does not stop the leak, then the tendon must be flushed and re-grouted.

The initial pumping pressure should be small (less than 40 psi [280 kPa]) and should gradually increase in pressure until the duct is filled. The maximum grouting pressure should not exceed 250 psi (1.7 MPa). If the grouting pressure exceeds the maximum, the grouting may continue at one of the upstream vents as long as one-way flow has been sustained at that vent. If a one-way flow of grout cannot be maintained, then the grout should be immediately flushed out of the duct.

Leaks

Leaks in the ducts may prevent the Contractor from maintaining the required 75 psi (0.5 MPa) pressure for one minute. The pressure will drop off gradually as the Contractor tries to hold the pressure. If there is a small leak, the Contractor may try to:

- close the valves at both ends (do not pressurize);
- wait for approximately 30 to 60 minutes (do not let the grout set up in the ducts; check grout set time and temperature);
- grout the adjacent duct(s) while you are waiting;
- return to the original duct and increase the pressure to 75 psi (0.5 MPa);
- check for gout flow at the outlet; and
- hold pressure at 75 psi (0.5 MPa) for one minute.

If the 75 psi (0.5 MPa) pressure cannot be held then:

- thoroughly flush the ducts and blow the water out with oil-free compressed air;
- immediately refill with fresh grout;
- check for grout flow at the outlet; and
- pressure test again.

If these procedures fail to seal the leak or if there is a rapid drop in pressure, the Contractor has no alternative but to find the leak through air or water testing and physically repair the leak.

Judgment needs to be used when trying to seal leaks through the grouting process. General principles to keep in mind are:

- the grout must always be able to flow through the outlet before pressure testing (this indicates that the grout has not set in the ducts and there are no voids or blockages);
- leaking between ducts can happen (so pressurizing one duct may force grout into an adjacent, yet-to-be grouted duct or into an open, leaky duct you are trying to fix);
- large cracks and holes cannot be sealed during the grouting process (no matter how hard the Contractor tries);
- pressurizing the grout reduces its set time, so does increasing the temperature;
- <u>don't ever allow the grout to set up in the ducts before passing the pressure test;</u> and
- when in doubt, flush the grout out!

Grouting Curves

A great deal of useful and often times critical information can be obtained by monitoring the grout pressure gauge and analyzing the information (see Exhibit 602-3.07-1). Grout injection time and the length of duct filled with grout are interrelated and are dependent on two constants: the duct void volume and the pumping rate (see the formula in Exhibit 602-3.07-1). During pumping, grout will conform to known principles of hydraulics.

Good grout will exhibit a gradual increase in pumping pressure due to:

- friction in the duct,
- any head which exists, and
- normal stiffening (see Curve 1 in Exhibit 602-3.07-1).

A grout that tends to "flash-set" in the duct will still exhibit a gradually increasing pressure but at a greater rate (see Curve 2). A constant pressure as shown in Curve 3 will indicate a hole in the duct, which allows grout to leak. A minor blockage will be indicated by a sudden jump in pressure followed by a continued gradual increase as shown in Curve 4. It should be determined whether:

- the entire duct can be filled without exceeding maximum recommended pressure;
- grouting should be transferred to a vent; or
- grouting should be discontinued, the duct immediately flushed, and the blockage repaired.

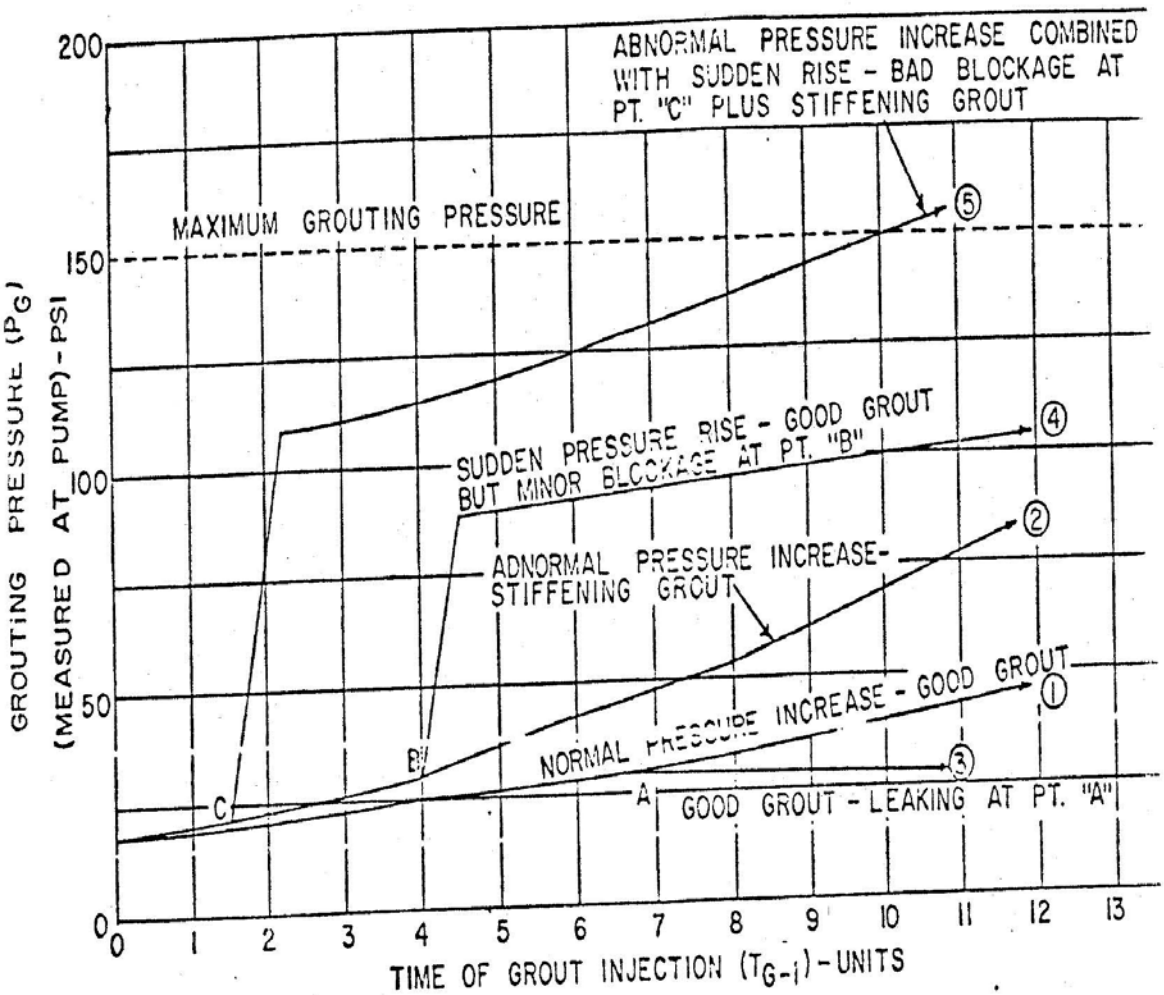

NOTE: GROUTED DUCT LENGTH AND GROUT INJECTION TIME HAVE THE FOLLOWING RELATIONSHIP:

$$T_{G-j} = \frac{V_v \times L}{C_p}; \text{ OR } L = \frac{T_{G-i} \times C_p}{V_v}$$

WHERE: T_{G-i} = GROUT INJECTION TIME (MINUTES)

V_v = DUCT VOID VOLUME (FT^3/FT)

C_p = RATE OF GROUT PUMP (FT^3/MINUTE)

L = LENGTH OF DUCT FILLED WITH GROUT (FT)

Exhibit 602-3.07-1 Grout Injection Time Graph

A bad blockage, possibly combined with stiffening grout, would be indicated by a large jump in the pressure curve as shown in Curve 5. As illustrated in Curve 5, there is nothing to be gained by allowing pressure to build up and hoping that a miracle will happen. Grouting should be stopped at a low pressure so the grout can be flushed out easily.

Successful grouting of one or more tendons will establish the “normal” pressure versus time relationship. Thus, any “abnormal” conditions existing in other tendons can be detected.

The valves and grout caps shall not be opened or removed until the grout has set. Usually caps and valves can be removed the morning following grouting operations.

602-4 & 5 Method of Measurement & Basis of Payment

Prestressed concrete is considered part of the lump sum structure payment and no separate measurements or payments are made for this work. A sub-item under the lump sum structure item is listed in the bidding schedule for precast girders or for prestressing cast-in-place concrete. The sub-items exist for partial payment purposes only.

603 PILING

603-1 Description

Piles are rarely used for ADOT bridges and other major structures. Drilled shafts are usually the preferred foundation. The rocky and cemented soils of Arizona are not conducive to deep pile driving. In addition, slender driven piles are not the preferred foundation by many ADOT Bridge Designers because of the severe scouring that occurs in many of our waterways. However driven piles do have a place as a deep foundation for some ADOT structures. When soil and scour conditions are favorable, piles are a very economical alternative to drilled shafts.

This section covers only pile driving and inspection at its basic level. The FHWA has excellent manuals on piling that the Resident Engineer and Inspector should read in advance of any pile driving operation. The *Manual on Design and Construction of Driven Pile Foundations*, referenced at the end of this chapter, is particularly informative and helpful.

What are piles?

A *pile* is a long slender column usually made of steel, reinforced concrete, or wood that is driven into the ground. The pile transmits loads by the frictional resistance developed between the side surface of the pile and the adjacent soil by direct bearing of the pile tip on bedrock (or a very hard soil) or by a combination of the two.

For example, if you drive a stake into the ground deep enough so that it can support your weight when you stand on it, you have a pile. You may only use a 5-pound (2 kg) hammer to drive the stake but the stake can carry much more than the weight of the hammer when a weight (or load) is placed at rest on top of the stake. You may be able to drive the stake further into the ground by jumping up and down on the stake but in reality, the loads placed on piles are static and do not impact the top of the pile (except during earthquakes).

Piles are used when a deep foundation for a structure is needed. Deep foundations are usually required when the soils near the surface are not strong or stable enough to support the weight of and the loads placed on a structure. Piles are also used to support a structure when there is a chance the soil, directly underneath a structure, would become loose or would wash away even though the soil could support the structure. Piles are usually placed in groups. *Piling* simply refers to a group of piles.

It is useful for the Inspector and Resident Engineer to know whether the piles used on the project are friction piles or bearing piles (some piles are a combination of the two) and what soil layers the pile are expected to be driven through. *Friction piles* rely on the residual friction developed between a driven pile and the adjacent soil to transmit loads from the pile to the soil. The friction is developed along the side surface of the pile. *End-bearing piles* are designed to transmit the loads carried by the pile to bedrock or hard soil strata. Although there may be friction developed between the pile and the adjacent soil, this friction is not relied upon. It is the layer of rock or hard soil at the pile tip that is expected to carry the loads.

Problems often occur during pile driving and knowledge of how the piles are intended to function can be very helpful when different solutions are considered. The Project Geotechnical Engineer can provide more information on piling design characteristics and soil conditions intended for the piles.

Test Piling

When test piles are required, the test piles must be driven in the exact location required for piling in the completed structure. The driving must be done in the same manner and utilizing the same equipment as specified for driving the piling for the structure. The test piles must be marked off in 1-foot (300-millimeter) intervals in order that a complete log may be kept on the driving of the test pile. This log should record:

- the date the pile was driven;
- location;
- time required for driving;
- information on hammer blows per foot (300 millimeters) of penetration into the ground; and
- penetration obtained during the last ten blows.

After the test piles are driven, the information should be forwarded to the Geotechnical Engineer for review.

When no test piling is required, the Resident Engineer shall review the driving results of the first two to three piles as to penetration, bearing value, and pile length. Any differences from plan requirements should be reported to the Geotechnical Engineer and the Bridge Designer as soon as possible.

603-2 Materials

Piles can be made of structural steel, pressure treated timber, hollow steel casing, reinforced concrete, or prestressed concrete. The most common type of pile is the steel H-pile. H-piles, like other steel piles, require certificates of analysis showing the test results for yield strength and ultimate strength.

Dimensions for steel H-piles can be found in the Steel Construction Manual referenced at the end of this chapter. In addition to checking the size of the H-pile, the Inspector should ensure that the correct grade and yield strength of steel is used. Some piles, especially those designed for end bearing, are limited in load carrying capacity by the yield strength of the steel. Thus it is imperative that the correct grade of steel is used.

Excavation and Embankment Materials

Subsection 203-5.03(A) requires that the Contractor excavate down to the top of the piling elevation before driving pile. Driving pile and then excavating around the piles is not an acceptable procedure. The risk of the excavating equipment accidentally hitting a pile and loosening or damaging it must be avoided.

When backfill material is used around metal piles, it must meet the structure backfill requirements of Subsection 203-5.03(B)(1). This specification requires, among other things, a resistivity of at least 2,000 ohm-centimeters to prevent corrosion of the metal pile.

In an embankment situation where metal piles are driven through an existing embankment, Subsection 203-10.02 requires the embankment material within 10 feet (3 meter) of the pile to have resistivity and pH value similar to structure backfill. The avoidance of corrosion is the goal here as well. Most long-term corrosion in metal piles comes from fill materials (like structure backfill and embankment) that do not meet the minimum requirements for pH and resistivity. Rarely do undisturbed natives soils cause corrosion problems with metal piles even when they have pH and resistivity values outside the required limits for backfill and embankment materials.

Embankment materials within 3 feet (1 meter) of the piling should not contain large rocks or debris that might damage the pile tip or prevent the driving of the pile (see Subsection 203-10.03[A]).

603-3 Construction Requirements

Inspection Objectives

There are five basic requirements that the Resident Engineer and Inspector should focus on during pile driving. By keeping the following objectives in mind both before and during piling driving, the Resident Engineer and Inspector will achieve 99 percent of the requirements for a long-lasting, solid foundation.

1. *Pile Location*:

A. Is each pile in the correct location?
B. Are pile groups laid out correctly?
C. Is the pile plumb and has batter been checked?

2. *Pile Material*:

A. Is the pile size correct?
B. Is the material type correct?
C. Is the material grade correct?

3. *Pile Driving Equipment*:

A. Does the Contractor's pile driving equipment meet the specification requirements with the hammer developing the minimum energy needed to properly drive the pile?

4. *Pile Length*

A. Is each pile driven to the correct length?
B. Was the tip elevation or an acceptable bearing value achieved?

5. Pile Bearing Values:

A. Does each pile have the minimum required bearing capacity as calculated in Subsection 603-3.08 or by an approved wave equation analysis?

Pile driving Contractors measure their productivity based on the number of feet (meters) of pile driven each day. Once a pile driving operation begins, these Contractors are reluctant to stop. As a result, it is strongly suggested that the Resident Engineer hold a pre-pile driving meeting with the Contractor so much of the equipment and materials approvals are acquired long before a single pile is driven. Discussions at the meeting should include:

- the Contractor's pile driving procedure;
- safety and hearing protection requirements;
- measurement and payment procedures;
- how bearing values will be determined;
- splicing and welding procedures;
- inspection activities as they impact the Contractor's production;

- potential problem areas during pile driving and possible solutions;
- how the Geotechnical Engineer should be involved in resolving pile driving problems; and
- a streamlined process for resolving piling driving issues as soon as they arise.

The idea is to anticipate any problem areas and resolve them before they become issues at the job site.

Meeting ahead of time to fully discuss the expectations and potential problems associated with pile driving is one of the most important activities a Resident Engineer can do to ensure a successful pile driving operation.

603-3.03 Equipment

Pile driving equipment should be thoroughly checked as soon as the Contractor delivers it to the job. In checking the Contractor's equipment, the Inspector and pile driving foreperson should see that:

1. the equipment proposed for use meets the requirements of the job;
2. the leads are sturdy, smooth, and straight;
3. the hammer falls freely in the leads; and
4. the blocks in the driving head of the hammer are not badly worn.

Inspecting the hammer is very important since it is the most essential piece of equipment of the pile driving operation. The hammer must operate properly so that it delivers its rated energy to the pile. If the hammer does not, then the Inspector's estimation of the pile bearing value will be virtually meaningless.

The Performance of Piling Driving Systems: Inspection Manual cited at the end of this chapter contains the forms and lists the procedures necessary for inspecting pile-driving hammers. You will need the Contractor's assistance when inspecting the hammer, so it is advisable to schedule this inspection during equipment set-up procedures.

603-3.04 Driving Piles

Embankments

Subsection 603-3.04(A) requires all embankments to be constructed in the area of piling before the Contractor drives any pile. For example, embankment for a bridge approach should be constructed up to the top of berm (see Standard Drawing B-19.40). The Contractor may have to excavate back down to the top of pile elevation in order to drive the piles.

On some projects the Contractor may propose to build the embankment to some point at or below the top of pile elevation, drive the piles, and then build the rest of the embankment. This is not the correct procedure because building embankment after pile driving will cause surcharge loading and down drag on the piling. Material placed adjacent to and above the piling will induce lateral and vertical loads not accounted for in the design of the piles.

Driving

Piles should be marked in 1-foot (300-millimeter) intervals to track the driving depth before being placed in the leads. Care shall be taken to see that each pile is driven in a vertical position except in cases where battered piles are specified. After the pile is placed in position and plumbed, a few strokes of the hammer should be made to settle the pile. The pile should be checked again to see if it is plumb and blocked firmly in the leads before actual driving starts.

Frequently obstructions are encountered which deflect the pile. If the pile becomes seriously out of line it may have to be pulled and re-driven. As a last resort, the pile location can be moved with the approval of the Bridge Designer.

Piles are either driven to:

- a specified tip elevation, regardless of bearing value;
- a minimum bearing value, regardless of tip elevation; or
- a minimum specified tip elevation with a minimum bearing value.

The Project Plans will specify which of these conditions the piles must meet. Of course the Inspector's job is to determine which of these conditions applies and then ensure that each pile meets the applicable condition.

Another duty of the Inspector is to verify that soil conditions are the same as that shown in the Project Plans or the soils report for the project. This can be done by comparing blow counts shown on the boring logs with actual blow counts for the piles at a given tip elevation. The idea is to compare differences in blow counts as the pile advances to identify the soft and hard soils layers shown on the boring logs. If the Inspector notices significant differences or inconsistencies in the pile blow counts, when compared to the boring log, then the Geotechnical Engineer should be notified. This verification does not need to be done on every pile, but should be done for at least one pile in each pile group.

If the piling cannot be driven to the minimum bearing or tip elevation shown on the Project Plans, the Resident Engineer should immediately notify the Geotechnical Engineer of the condition and must not allow the Contractor to cut off such piling unless authorization to do so is obtained from the Bridge Group. Often a study of all available information may require the Contractor to use jetting, drilling equipment, or other methods in order to reach minimum penetration.

Before a driven pile is cut, the Resident Engineer and Inspector, along with the piling driving foreperson, should verify that the pile would be cut to the correct top of pile elevation. Piling is usually covered with a concrete pile cap with the pile extending part way into the cap. The Inspector should ensure that the pile penetrates into the pile cap for the prescribed length shown in the Project Plans before the pile is cut.

603-3.05 Pile Splices

When piles are to be spliced, the Project Plans will show a splicing detail. Steel H-piles (the most common metal pile) are usually butt spliced with the pile still in the leads. Any welding done on a metal pile must be done by an AWS certified welder.

If a splicing detail is not shown on the Project Plans then Bridge Group should be involved in approving any splicing detail.

Pile driving Contractors should order their pile lengths and plan their pile driving sequence in order to minimize the amount of splicing that needs to be done. It is suggested that the Project Supervisor meet with the pile driving Contractor before piles are ordered to go over lengths and pile driving sequence with the intent of minimizing cut-off waste and unnecessary splicing.

603-3.06 Pile Cutoff (Waste)

Cut-off waste that remains at the end of a pile driving operation is the property of the Department unless that

quantity is deducted from the furnished pile bid item. The cut-off waste may be incorporated into the project elsewhere or salvaged by a Department of Administration (DOA) authorized salvage Contractor. The DOA Surplus Property Section can be contacted at (602) 542-5701 for further information. The Contractor may purchase the cut-off waste through a supplemental agreement.

603-3.08 Determination of Bearing Values

The Inspector, with the assistance of the Resident Engineer, must determine the bearing value for each pile. This must be done as each pile is driven and before the pile is cut. Bearing values are determined by measuring the pile penetration per blow for the last 1 foot (300 millimeters) of pile driving. Table 603-1, in Subsection 603-3.08 of the Standard Specifications, is used to calculate the bearing value. Penetration readings and blow counts must be carefully recorded in the pile driving records discussed in Subsection 603-4 of this manual.

When a wave equation analysis is used to determine bearing values, the Resident Engineer should consult with the Geotechnical Engineer about acceptable bearing values. The Inspector must monitor the Contractor's dynamic monitoring equipment for acceptable readings when bearing is reached.

603-4 Method of Measurement

Pile Driving Records

Pile driving records consist of the Pile Record Book and Pile Summary Sheet.

The Pile Record Book is a bound field book that contains a pile location plan, hammer data, a pile driving log for each pile, an inventory record of pile cutoff, and any other information gathered or measured in the field related to pile driving. Exhibit 603-4-1 (a through f) illustrates how a piling book should be organized.

Pile Record Books are part of the project as-built plans and should accompany them when forwarded to ADOT's Project Management Section. Bridge Group uses the Pile Record Book to complete a bearing pile record sheet for their Bridge Management Section. This sheet is used for trouble-shooting future bridge foundation problems.

The Pile Record Summary Sheet is a recap of the piling quantities used for each structure for payment purposes (see blank forms). The Inspector prepares the sheet after all pile driving is completed for a structure and should be checked by the Resident Engineer.

EXAMPLE:

PILING RECORD BOOK
COVER AND PAGE 1

EXHIBIT NO. A

PROJECT I-8-3 (71) YUMA-CASA GRANDE HWY.	Project Number Project Name
PILE RECORD BOOK JOHNSON WASH BRIDGE Sta. 1800+	Book Title Name of Structure Location
John Doe ~ Resident Engr. Date: March, 1983	Project Engineer and Title Date piling items were completed.
BOOK 1 OF 2 BOOKS.	Book Number

Exhibit 603-4-1a Piling Record Book

INDEX and INSPECTOR

Example:

INDEX

LOCATION	PAGE
Abutment #1	3 - 10
Pier #1	11 - 20
Pier #2	21 - 30
Abutment #2	31 - 37
Recapitulation	38
Inventory	39

Inspector: J. D. Brown

Transitman: P. O. Blue

Chainman: A. C. Gray

Exhibit 603-4-1b Piling Record Book

PILE LOCATION, TYPE, PLANS LENGTH

a. Batter Pile are indicated by crossed circle. Show cosine of batter to compute elevations.

EXAMPLE

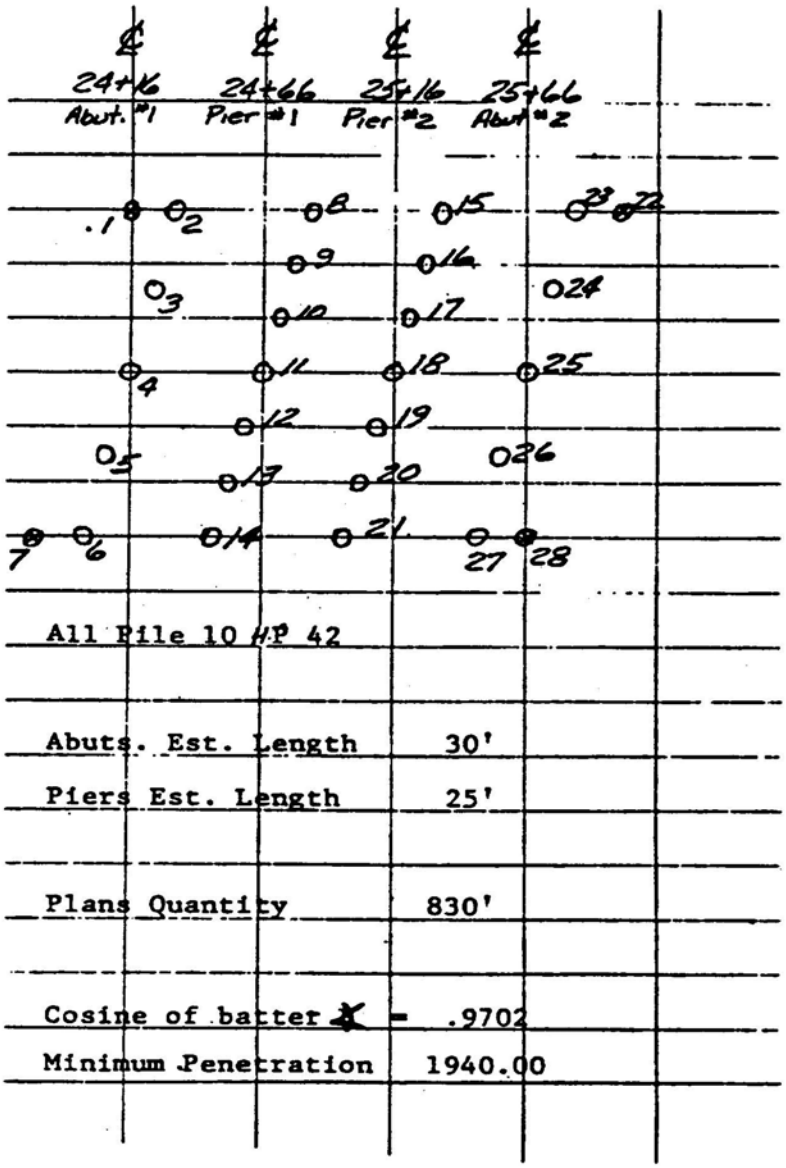

All Pile 10 HP 42

Abuts. Est. Length	30'
Piers Est. Length	25'
Plans Quantity	830'
Cosine of batter ∡ =	.9702
Minimum Penetration	1940.00

Exhibit 603-4-1c Piling Record Book

HAMMER DATA

a. When loading tests are required, the method of testing shall be as specified in the Special Provisions or Standard Specifications.

b. The Hammer Data to be entered in the field book should be for only the hammer used in driving. Should more than one hammer be used, indicate for which pile each was used.

c. For bearing formulas, see below.

Example

	Hammer Data				
Type	-	Single	Action		
Make	-	Vulcan			
Weight	of Ram	- 5000#			
Stroke	-	3'			
	Formula	= P =	$\frac{2\ wh}{S + 0.1}$		
	Bearing	= $\frac{2\ (5000 \times 3)}{S + 0.1}$			
P = safe allowable bearing in pounds					
W = weight of hammer in pounds					
H = fall of hammer in feet					
S = average penetration in inches per blow					
	for the last 10 blows				
A = effective area of piston in square inches					
p = mean effective pressure in psi					
E = manufactures energy rating in foot - lbs.					
	per blow				

Type of File	Type of Hammer	Formula
Timber and Steel	Drop	$P = \frac{2WH}{S+1.0}$
Timber, Steel and Metal Shells for Cast-in-Place Concrete	Single-Acting Steam or Air, or Diesel	$P = \frac{2WH}{S+0.1}$
	Double-Acting Steam or Air	$P = \frac{2H(W+Ap)}{S+0.1}$ $P = \frac{2E}{S+0.1}$
Precast Concrete	Single-Acting Steam or Air, or Diesel	$P = \frac{2WH}{S+0.1}$
	Double-Acting Steam or Air	$P = \frac{2H(W+Ap)}{S+0.1}$ $P = \frac{2E}{S+0.1}$

Exhibit 603-4-1d Piling Record Book

EXAMPLE

Piling Book Entries

DATE	2-4-83	PILE NO.	21 (BATTER)		LAST 10		
TIME	NO. BLOWS	PEN. IN FEET	NO. BLOWS	PEN. IN FEET	BLOWS		
						LENGTH OF PILE BEFORE SPLICE	25.2
		0	37	24	4 1/4"	LENGTH OF SPLICE - FROM STOCK	2.2
			40	25	S= 4.25/10	TOTAL LENGTH OF PILE AFTER SPLICE	27.4
DRILL			40	26	S=.42		
9:25	10	11					
	12	12			Bearing	TOTAL LENGTH OF PILE BEFORE CUTOFF	27.4
	11	13			56.9	LENGTH OF CUTOFF - TO CONTR	0.7
	10	14			Tons	LENGTH OF PILE IN PLACE	26.7
	11	15					
	12	16					
	15	17				ELEVATION OF PILE CUTOFF	1029.35
	14	18				LENGTH OF PILE BELOW CUTOFF	26.34
	16	19				ELEVATION OF PILE POINT	1003.01
	21	20					
	22	21				HEAT No. 13697	
	27	22				26.7 cos 8 .9864 = 26.34	
	30	23					
						INSPECTOR: W. F. R.	

NOTE: Rubber stamps for formats are available from Field Reports Services

Exhibit 603-4-1e Piling Record Book

CUTOFF INVENTORY

Example
(Theoretical)

(OPTIONAL)

38 (page number)

CUTOFF INVENTORY

	From	In Yard	Contr. Use	Waste	Total	
Abut #1	Pile #1	2.00	.67		2.67	
	2	—	.50		.50	
	3	5.50			5.50	
	4	4.25			4.25	
	5	5.17			5.17	
	6	10.00		.33	10.33	
	7	1.83			1.83	
	8	1.00		.50	1.50	
	9	3.17			3.17	
	10	6.00	2.80		8.80	
	11	3.50		.50	4.00	
	12	1.50		.17	1.67	
		Total cutoff		-	49.39	
		Contr. Use		-	3.97	(not payable)
		Waste -		-	1.50	(not payable)
		Piling on hand		-	43.92	

Exhibit 603-4-1f Piling Record Book

603-4.01 Furnishing Piles

- Measure the quantities delivered to the project site or designated storage area--the quantity should not exceed lengths specified in the Project Plans unless approved by the Resident Engineer.
- Record the lengths in the Pile Record Book.

Cast-in-place pile quantities are equal to the actual driven amount only since any cut-off sections are usually unusable (see Subsection 603-4.01 of the Standard Specifications).

The quantities of furnished pile may be reduced by the Inspector due to:

- pieces wasted through mishandling by the Contractor;
- pieces used by the Contractor for convenience or construction aids (i.e. splice plates);
- pieces used for other structures or for other projects; and
- lengths in excess of those specified unless ordered or approved by the Department.

The length of unused steel piling or metal shells on hand, which are to be purchased by the Department, should be documented in the Pile Record Book and Pile Summary Sheet.

603-4.02 Driving Piles

- Measure the actual length driven in meters and record in the Pile Driving Book.
- Track the number of blows per 1 foot (300 millimeters) and the penetration depth for the last five to twenty blows depending on the hammer type (see Standard Specification Table 603-1).
- Compute bearing values for each pile.
- Record all this information in the Pile Record Book. Include hammer information and any computations.

If pile load testing is performed for the structure, record the results in the Pile Record Book and sign the book.

603-4.03 Splicing Piles

Record the number of splices in the Pile Record Book and pay at the contract unit price. If there is no unit price then refer to Subsection 603-5.04.

The quantity of pile splices may be reduced when splices are made:

- for the Contractor's convenience (i.e. splicing lengths less than those ordered by the Resident Engineer to make a specified length of pile); and
- to correct Contractor errors in cutoff elevation.

The Department will pay for additional splices when they are used to keep the quantity of unused pile down to a minimum.

604 STEEL STRUCTURES

604-1 Description

The most common steel structures found on ADOT projects are sign structures, sign posts, light and traffic signal poles, handrails, cattle guards, underdrains, and steel piling. Although these are all steel structures, only underdrains, sign structures, poles, and cattle guards refer to Section 604 for additional specification requirements.

Steel bridges are less common on ADOT projects, but do fall under this specification when they are built.

Field inspection of steel structures is a straightforward process when compared to reinforced concrete structures. With reinforced concrete, the structure is built from scratch. The Contractor must build forms to shape the structure and very little off-site fabrication is done except when precast members are used. On the other hand, much prefabrication and pre-assembly is done with steel construction. The steel is made and shaped in a steel mill. A steel fabricator cuts, punches, bends, and welds the basic steel shapes from the mill to form each member of the structure. The fabricator may even assemble part of the steel structure in the shop before shipping. By the time the components of the structure arrive on the job site, most of the work has been done. All that is left for the Inspector and Resident Engineer is to oversee the erection and final assembly.

Erection and final assembly inspection basically involves making sure the Contractor follows the requirements in the approved shop drawings and the specifications. The shop drawings will show how each part of the structure is to be connected together; which parts are to be used; what specs they must meet; and what order the parts are to be assembled.

Good inspection of steel structure construction involves:

1. Ensuring that all the steel and steel parts delivered are the correct type and grade specified (ex. steel plates and members are usually ASTM A36 steel, high strength bolts are the A325 type). This involves checking the Project Plans, shop drawings, and the markings on the steel (also checking the paperwork that accompanies each steel shipment).

2. Verifying that each component has the correct dimension as shown on the approved shop drawings or required by the specifications. The sections on standard mill practices and structural shapes in the Manual of Steel Construction are excellent guides (see the references at the end of this chapter).

3. Ensuring that the structure is erected and assembled in strict accordance with the procedures described in the approved shop drawings, the Special Provisions and the Standard Specification; especially that no components are bent, over-stressed, cut, punched, drilled, or otherwise damaged to expedite the erection procedures (unless approved by the Structure Designer or Bridge Group). Monitoring the erection process for safety and structural stability is important.

4. Paying close attention to how connections are made. In steel construction, *connections* are defined as the method by which two or more steel members are joined. Connections are either welded, bolted, or pinned. In assembling a steel structure, the Inspector must ensure proper connection installation. Most steel structures are designed to fail in the steel members where the steel will yield and warn people of the danger (breakaway post are the exception). Failures in a connection are highly undesirable. They are usually sudden and without warning. Proper inspection of field connections by the Inspector will help to ensure that the structure will behave safely and predictably when placed in service.

These are the overall goals for the inspection of steel structures. The rest of this section describes in more detail structural steel inspection procedures and the underlying engineering objectives.

604-2 Materials

604-2.01 Structural Steel

ADOT steel structures are made of high-grade carbon steel (usually "A36" steel). This kind of steel is stronger and more ductile than the steel found in more common items such as refrigerators and filing cabinets. A36 steel will yield considerably (or stretch) before breaking warning people that the structure is about to fail.

This type of safety mechanism will only work if the right kind of steel is supplied to the project. The Inspector must examine all steel members, plates, bolts, nuts, washers, and other hardware for:

- shipping documents that accurately identify the quantities, shapes, and type of steel shipped;
- Certificate of Analyses that are complete and descriptive of the materials supplied including grade identification, test results, and the applicable lot or heat number;
- the appropriate markings which would show the type and grade of steel used (not all structural steel is marked); and
- compliance with key dimensional requirements such as thickness, length, width, diameter, and section shape.

Steel structures are most likely to fail if the wrong materials are used. This is why it is important for the Inspector to verify that only the proper materials (correct grade, shape and size) are supplied.

604-2.03 High-Strength Bolts, Nuts and Washers

In this section, high-strength bolts and high-strength bolted connections will be discussed. Bolted connections are the most common type of field connection. Careful inspection of bolted connections will help ensure that they do not become the weakest link in a structure.

Identifying and Sampling High-Strength Bolts

AASHTO and ASTM recognize only three types of bolts for structural work. A307 bolts are the everyday normal strength bolts used in a wide variety of applications from holding up light fixtures to cattle guard assembly. The maximum allowable tensile stress in A307 bolts is 20 ksi (138 MPa). The two other types of bolts are designated as high-strength bolts. A325 bolts have a maximum allowable tensile strength of 44 ksi (303 MPa) more than double the strength of an A307 bolt while A490 bolts have a maximum strength of 54 ksi (372 MPa).

With such a wide range of strengths, it is easy to see why it is so important to identify the type of bolt used in a connection. There have been documented cases in which the wrong type of bolt or an inferior counterfeit bolt had been used in a structural connection with devastating results.

Exhibit 604-2.03-1 illustrates how to identify high strength bolts, nuts, and washers. Exhibit 604-2.03-2 gives dimensional information on structural bolts and washers. The Commentary on Specifications for Structural Joints Using ASTM A325 or A490 Bolts found in the *Manual of Steel Construction* can provide additional information in identifying high-strength bolts, nuts, and washers.

High-strength bolts need to be properly lubricated before being placed in a connection. The lubrication is necessary to limit the amount of friction developed between the bolt, the nut, and the connection plates. The head of the bolt can be twisted off during torquing if too much friction develops.

Inspectors should sample bolts, nuts, and washers in accordance with the Sampling Guide and deliver them to Materials Group for testing. Make sure the Contractor orders extra hardware so the correct number of samples can be taken without leaving the project short.

Understanding Bolted Connections

A structural connection transfers loads from one structural component to another. Bolted connections consist of plates, bolts, nuts, and washers--they all play a part in transferring loads across the connection.

There are two types of bolted connections. Both look the same, only the function of the bolts changes. The first type is the *bearing connection*. Loads are transferred across the joint by shear stresses on the bolt and bearing stresses on the plates caused by the bolts. If the loads get too high, either the bolts will shear or the plates will rupture as the bolts tear out of their holes. When bearing-type connections are specified, the bolts only need to be snug tight to keep the bolt properly aligned and secure after installation.

The other type of connection is the *slip-critical connection*. Loads are transferred by means of friction between the plates and the structural members at the connection. The role of the bolts, nuts, and washers is to provide a clamping force between the connection plates and the structural members to prevent any sliding. This connection is designed to prevent any movement of the plates or bolts during normal loading conditions. Under extreme loading conditions (after slippage has occurred), the connection behaves just like a bearing-type connection. However the idea behind the slip-critical connection is to design the connection so it doesn't slip. Loads are transferred only through friction. The bearing properties of the connection are used only as an added factor of safety. (Connections where the bolts are placed in direct tension by the loads in the members also fall under the slip-critical category since the design and behavior of the connection are similar.)

Slip-critical connections are used more often in highway structures than bearing-type connections because they more effectively handle stress reversals, impacts, vibrations and other extreme stress changes. Slip-critical connections are more efficient than bearing connections, as they require fewer bolts in the connection to carry the same load. Bearing connections are more prone to metal fatigue when they are subject to repetitive stress changes.

HIGH STRENGTH BOLT IDENTIFICATION

A - 325 BOLT

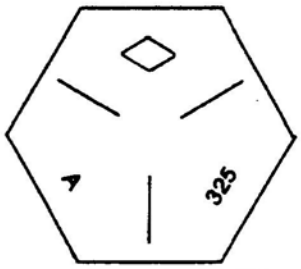

Bolts **must** be marked A-325 or M-164 and have manufacturers symbol

Type 1 may have 3 radial lines at 120°.

Type 2 **shall** have 3 radial lines at 60°.

Type 3 **shall** have A-325 or M-164 underlined.

NUT

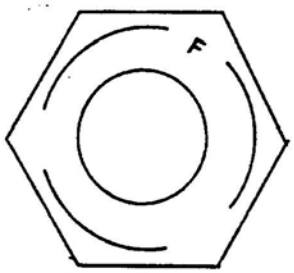

Nuts **must** have 3 curved lines and may have letter symbol.

Length of curved lines may vary

A - 490 BOLT

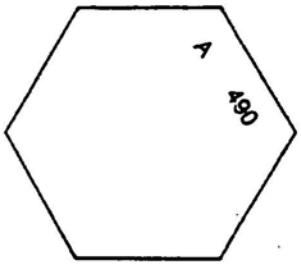

Bolts **must** be marked A-490 or M-253

Type 2 **shall** have 6 radial lines at 30°.

Type 3 **shall** have A-490 or M-253 underlined.

NUT

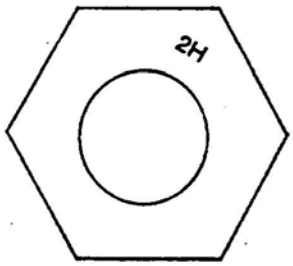

Nuts are marked 2H or DH and may have a manufacturers symbol

CLIPPED WASHERS

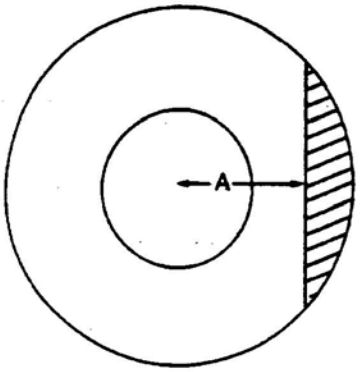

The minimum dimension "A" is ⅞ of the bolt diameter.

Exhibit 604-2.03-1 High Strength Bolt Identification

HEAVY HEXAGON STRUCTURAL BOLTS & NUTS DIMENSIONS

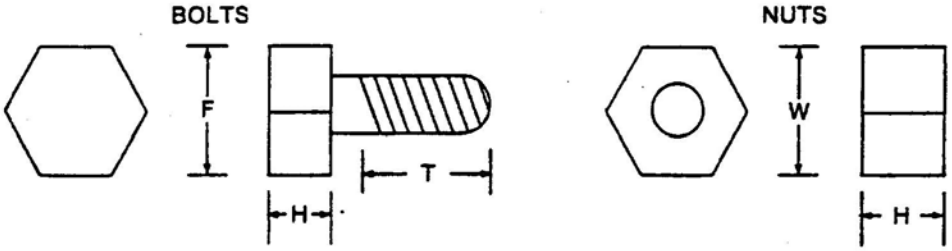

NOMINAL BOLT SIZE - D	WIDTH ACROSS FLATS - F	HEIGHT BOLT - H	THREAD LENGTH - T	HEIGHT NUT - H
1/2	7/8	5/16	1	31/64
5/8	1-1/16	25/64	1-1/4	39/64
3/4	1-1/4	15/32	1-3/8	47/64
7/8	1-7/16	35/64	1-1/2	55/64
1	1-5/8	39/64	1-3/4	63/64
1-1/8	1-13/16	11/16	2	1-7/64
1-1/4	2	25/32	2	1-7/32
1-3/8	2-3/16	27/32	2-1/4	1-11/32
1-1/2	2-3/8	15/16	2-1/4	1-15/32

WASHER DIMENSIONS

	Circular Washers				Square or Rectangular		
BOLT SIZE - D	NOMINAL OUTSIDE DIA. *	NOMINAL HOLE DIA	THICKNESS MAX	THICKNESS MIN	MIN. SIDE DIMEN.	MEAN THICKNESS	SLOPE OF TAPER
1/2	1-1/16	17/32	.097	.177	1-3/4	5/16	1:6
5/8	1-5/16	21/32	.122	.177	1-3/4	5/16	1:6
3/4	1-15/32	13/32	.122	.177	1-3/4	5/16	1:6
7/8	1-3/4	15/16	.136	.177	1-3/4	5/16	1:6
1	2	1-1/16	.136	.177	1-3/4	5/16	1:6
1-1/8	2-1/4	1-1/4	.136	.177	2-1/4	5/16	1:6
1-1/4	2-1/2	1-3/8	.136	.177	2-1/4	5/16	1:6
1-3/8	2-3/4	1-1/2	.136	.177	2-1/4	5/16	1:6
1-1/2	3	1-5/8	.136	.177	2-1/4	5/16	1:6
1-3/4	3-3/8	1-7/8	.178**	.28	—	—	—
2	3-3/4	2-1/8	.178	.28	—	—	—
Over 2 to 4 incl.	2D-1/2	D+1/8	.24***	.34	—	—	—

* May be exceeded by 1/4 in.
** 3/16 in. nominal
***1/4 in. nominal

Exhibit 604-2.03-2 High Strength Bolt and Nut Dimensions

You can identify the type of bolted connection by checking the Project Plans or the shop drawings to determine how the bolts are to be tightened. If the bolts are specified to be snug tight, the connection is the bearing type. If the bolts are required to be tensioned, the connection is slip-critical.

Snug-Tight Bolts

The Inspector must verify that all bolts in a bearing connection are snug tight. Even bolts in a slip-critical connection are to be in a snug-tight condition before tensioning. AASHTO paragraph 11.5.6.4.1 (from Section 11, Steel Structures, the Inspector should have a copy) defines *snug tight.* Section C8 of the Commentary on Specifications for Structural Joints Using ASTM A325 or A490 Bolts in the *Manual of Steel Construction* is helpful in determining when a bolt is snug tight.

If the bolt length is long enough, snug-tight bolts should contain two nuts with the second following the first (double nutting). This prevents the first nut from loosening after the bolt has been snugged tight.

Bolts are always tightened and tensioned from the most rigid (stiffest) part of the connection to free edges. *Most rigid* is usually defined as the thickest or stiffest part of the connection or the interior of the connection. Check with the Resident Engineer if you are unsure where to start tightening.

Bolt and Thread Lengths

Bolted connections are much stronger when the threaded portion of the bolt shaft is kept out of the *grip,* which is defined as the connection plates and the adjoining structural members. For this reason, limits are placed on how far the threads can penetrate into the grip (see Exhibit 604-2.03-3). On the other hand, if the thread is too far out of the grip, the nut may run out of thread before the bolt is properly tightened. Washers can be added to remedy this situation. If washers are used, the bolt length should be increased in 5/32-inch (4-millimeter) increments for flat washers and 1/4-inch (6millimeter) increments for beveled washers. The bolt lengths determined by the above procedure should then be increased to the next greater 1/4-inch (6-millimeter) increment. These lengths allow for manufacturer's tolerances and will provide an adequate length of bolt protrusion through the nut (see Exhibit 604-2.03-3 for calculating bolt lengths).

The Inspector must check each bolt in a connection to verify these conditions are satisfied. The Inspector should also check the bolt length to ensure that at least two threads are exposed after all the washers and the nut or double nuts have been added.

DETERMINING CORRECT BOLT LENGTH

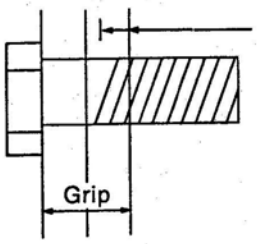

Max. ⅜" For ½, ⅝, ¾, ⅞, 1¼, 1½," ϕ Bolts
Max. ½" For 1, 1⅛, 1⅜" ϕ Bolts

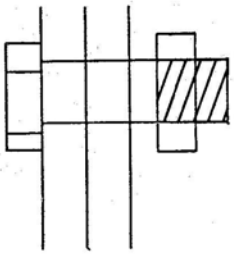

Guard against condition where nut runs out of thread

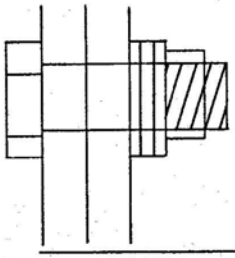

Add circular washers as needed to prevent stopping run of the nut
There must be enough thread for a full nut

Bolt Size, in Inches	To determine required bolt length add to grip, in inches
½	11/16
⅝	⅞
¾	1
⅞	1⅛
1	1¼
1⅛	1½
1¼	1⅝
1⅜	1¾
1½	1⅞

TO DETERMINE CORRECT BOLT LENGTH

- Use the table to determine the bolt length then take the next ¼ inch increment.
- Check that the thread does not protrude more than the specified amount into the connected members.
- Check that the nut will not run out of thread (use the dimensions in Exhibit B)
- Check that the bolt will protrude from the nut.

Exhibit 604-2.03-3 Determining Correct Bolt Length

Tensioning Bolted Connections

For slip-critical connections, the bolts are tensioned to at least 70 percent of their allowable tensile strength. This provides the clamping force needed to keep the connection plates from sliding. The Inspector must closely monitor and document this process. At least 10 percent of the bolts in a connection should be checked by the Inspector for proper tensioning. If one bolt fails, the entire connection should be re-tightened and the checking process repeated.

Tightening can be done with a manual torque wrench or a power impact wrench. Over-tightening up to 85 percent of allowable strength is acceptable.

The Project Plans or shop drawings will specify which bolts are to be tensioned. Bolts that are not specified to be tensioned should be snug tight. The Inspector should not allow the tensioning of bolts unless specified. For example, anchor bolts embedded in concrete foundations and bolts on breakaway-type base plates are never tensioned.

When tensioning is specified, AASHTO Subsection 11.5.6.4 allows four methods for bolt tensioning. The Bridge Designer may override AASHTO and permit only one or two of the tensioning methods (see the Project Plans).

1. *Turn-of-Nut Tightening*

Basically the turn-of-nut method requires the nut to be tightened a certain number of turns after a snug-tight condition is reached in the bolt. The number of turns needed to tension the bolt depends upon the length of the bolt, the slope of the outer faces of the connection plates or structural members, and the type of washers used (see Exhibit 604-2.03-4). AASHTO specifications require the Contractor to prove that this method will develop the required tension by testing the bolt and nut assembly in a direct tensioning measuring device such as the Skidmore-Wilhelm Calibrator discussed later in this subsection.

2. *Calibrated Wrench Tightening*

This method uses a torque wrench to determine the amount of tensioning in a bolt. The method assumes that the amount of tension in a bolt is directly related to the amount of torque it takes to turn the bolt. In practice however, friction can develop between the nut and the bolt greatly increasing the amount of torque needed to achieve a given tension. This friction is dependent on temperature, moisture, and the cleanliness of the bolts. For the last few years this type of tensioning was not allowed by AASHTO. However this method is allowed again but with some stipulations.

The first stipulation is the requirement for daily calibration of the torque wrench in a direct tension calibrator. The second is the use of only hardened washers. The third stipulation is the protection of the nuts, bolts, and washers from dirt and moisture. This last requirement has probably the greatest effect on consistent tensioning of the bolts by this method. Dirty and even slightly rusty bolts greatly affect the amount of torque needed to develop a given tension in a bolt. This method of tensioning is much more inspection intensive requiring very careful monitoring and documentation by the Inspector.

TURN-OF-NUT TIGHTENING

Bolt Length measured from underside of head to extreme end of point	Nut Rotation[1] from Snug Tight Condition		
	Both faces normal to bolt axis	One face normal to bolt axis and other face sloped not more than 1:20 (bevel washer not used)	Both faces sloped not more than 1:20 from normal to bolt axis (bevel washers not used)
Up to and including 4 diameters	1/3 turn	1/2 turn	2/3 turn
Over 4 diameters but but not exceeding 8 diameters	1/2 turn	2/3 turn	5/6 turn
Over 8 diameters but not exceeding 12 diameters[2]	2/3 turn	5/6 turn	1 turn

[1]Nut rotation is relative to bolt, regardless of the element (nut or bolt) being turned. For bolts installed by 1/2 turn and less, the tolerance should be plus or minus 30°; for bolts installed by 2/3 turn and more, the tolerance should be plus or minus 45°.

[2]No research work has been performed by the Research Council on Riveted and Bolted Structural Joints to establish the turn-of-nut procedure when bolt lengths exceed 12 diameters. Therefore, the required rotation must be determined by actual tests in a suitable tension device simulating the actual conditions.

Exhibit 604-2.03-4 Turn-of-Nut Tightening

3. *Installation of Alternate Design Bolts*

This method is just a variation of the second method. It uses a breakable splined adapter that grips the nuts and breaks off after a certain torque is reached. These fasteners must be properly stored and pre-tested in a direct tension calibrator before use.

4. *Direct Tension Indicator (DTI) Tightening*

In this method, collapsible washers are used to indicate when a certain tension in the bolts is reached. The washers, which are placed under the head of the bolt, collapse when the bolt achieves a predetermined tension. This method is the most accurate for determining the tension in a bolt. However the washers should still be tested at the job site in a direct tension calibrator to demonstrate that they do collapse at the required tension. It is important for the Inspector to ensure that the collapsible washers are installed in accordance with the manufacturer's recommendations.

The commentary in *Manual of Steel Construction* and the FHWA publication called *High Strength Bolts for Bridges* provide more information on tensioning methods and inspection procedures. Their consultation is highly recommended.

Skidmore-Wilhelm Calibrator and Torque Wrenches

The Skidmore-Wilhelm Calibrator directly measures tension in a bolt. It is used to calibrate torque wrenches, verify tension in bolts tightened by the turn-of-nut method, and check the tension developed in a bolt when DTIs or alternate design bolts are used. Exhibit 604-2.03-5 shows the calibrator.

There should be a Skidmore-Wilhelm Calibrator on the project site when high-strength bolts are tensioned. The Phoenix Regional Lab has Skidmore-Wilhelm Calibrators that the field office can borrow. They also have torque wrenches available for use.

The field office is responsible for verifying that all Skidmore-Wilhelm Calibrators and torque wrenches are properly calibrated before use on the project. The Materials Group Annex (602-712-7741) can calibrate these instruments. It is permissible to use a calibrator or torque wrench supplied by the Contractor as long as these devices have been calibrated within the last year by a recognized calibration service (contact the Materials Group Annex for verification of calibration service).

Calibration of Wrenches:

The impact wrenches shall be calibrated at the beginning of each working day and each time a new size or lot of bolts are used or there is a change in wrench connections such as hose, extensions or universal sockets. Three bolts of the same grade, size and condition as those being used shall be placed individually in the calibration device. There shall be a washer under the part turned in tightening each bolt. Figure 1 shows a method of calibrating a wrench.

Calibrate wrench on the job site. Illustrated is the method using a hydraulic tension calibrator* that records on a dial the tension of the bolt.

FIGURE 1

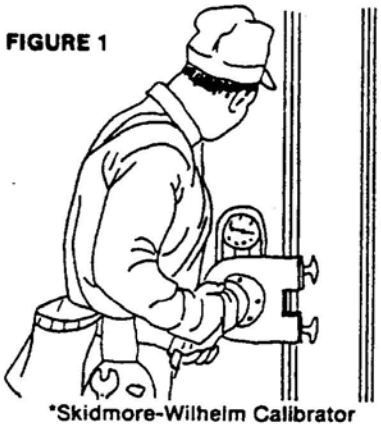

*Skidmore-Wilhelm Calibrator

a. Use same lot of fastener assemblies for testing that will be used on the job.
b. Use same length of hose and socket that will be used on the job.
c. Gage needle should be slightly **above** the required tension. Make enough checks so this reading is consistent. (Figure 3)
d. Change bolts with each check.
e. Replace equipment not reaching proper tension with larger equipment.

Calibration of Inspection Torque Wrench:

Figure 2 shows the operator calibrating a hand-indicator torque wrench. The bolt is brought to the proper tension in the calibrator. The dial on the wrench was set at "zero" and sufficient torque applied to slightly move the nut in the tightening direction. At this point, the wrench dial shows the foot-pounds required to further rotate the nut. This test should be made on at least three bolts of each lot and the torque figures averaged. This average may then be used for inspection of installed bolts of the same lot. The torque wrenches used by inspectors of both the erector and the State should be tested and compared at the same time for purposes of uniformity.

FIGURE 2

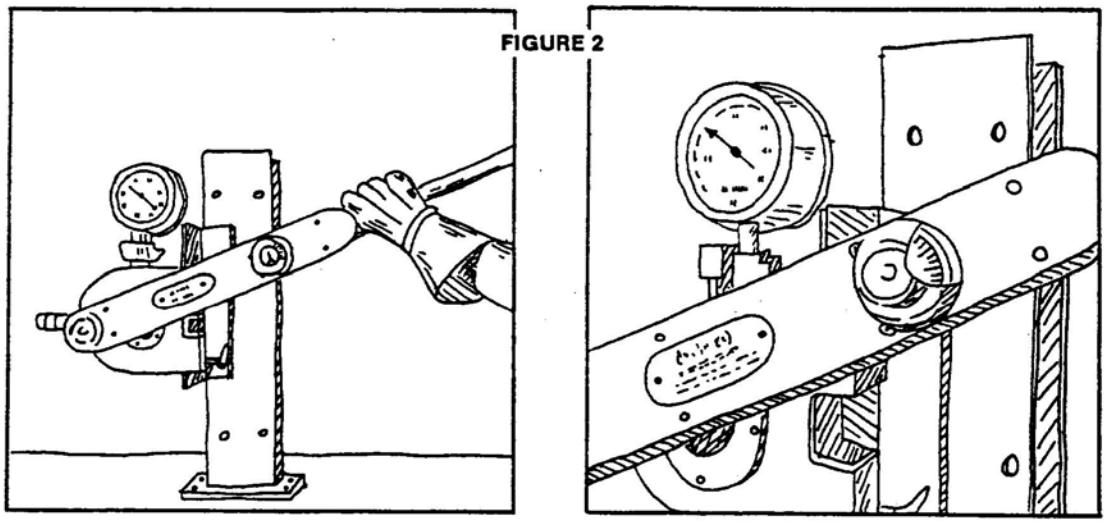

Bolt Diameter (inches)	Recommended Bolt Tension For Calibrating Wrenches in Kips		Required Minimum Bolt Tension in Kips		*Equivalent Torque For Minimum Bolt Tension in ft. lbs.	
	A325 Bolts	A490 Bolts	A325	A490	A325	A490
½	13.2	16.5	12	15	100	125
⅝	20.9	26.4	19	24	198	250
¾	30.8	38.5	28	35	350	438
⅞	42.9	53.9	39	49	570	716
1	56.1	70.4	51	64	852	1069
1⅛	61.6	88.0	56	80	1052	1503
1¼	78.1	112.2	71	102	1482	2130

Exhibit 604-2.03-5 Skidmore-Wilhelm Calibration

Documentation

Inspectors assigned to bolt tensioning should document:

- when and where hardware samples were taken for materials testing;
- which bolts or bolt groups were tensioned and the tensioning force that was achieved;
- what method was used to achieve the required tension in the bolts (turn-of-nut, DTI's, etc.);
- the order in which the bolts were tensioned (a diagram may be useful here);
- torque readings on all bolts if a torque wrench was used;
- any bolts that were tightened to only a snug-tight condition;
- any re-lubricating of bolts if ordered by the Inspector or Resident Engineer;
- how often the tensioning method was checked with the Skidmore-Wilhelm and what the results were; and
- any corrective actions that were taken to properly assemble the bolted connection, like changing bolts lengths or hole reaming.

Complete documentation of how bolted connections were constructed can become crucial if there is a failure of the structure later on. The documentation also shows that the Inspector was actively involved in verifying tensioning of bolts and reduces the chance that any serious defects exist in the connection.

604-2.10 Certification of Structural Steel

Certifications for structural steel elements such as plates, steel members, nuts, bolts, and washers require additional information above and beyond what ADOT normally requires on a certification.

Certifications for structural steel are called Certificates of Analysis and require a regular Certificate of Compliance in addition to the following test results:

Structural Steel Shapes and Plates

- Chemical analysis (metallurgical composition)
- Charpy V-notch test (CVN) for structural steel subject to tensile loading

High-Strength Bolts, Nuts, Washers

- Rotational capacity test
- Proof load test
- Zinc thickness test (when galvanized bolts are specified)

The heat number of the steel covered by the Certificate of Analysis should be shown on the test results and on the Certificate of Compliance. The type and grade of steel must be shown on the Certificate of Compliance.

604-3 Construction Requirements

604-3.01 Shop and Working Drawings

Every steel structure, whether it be a sign structure, light pole, or bridge, requires shop and working drawings showing:

- how each steel member will be fabricated;
- how each connection will be made and the details for making those connections; and
- how the structure will be erected and assembled.

The shop drawings are intended to be a complete set of step-by-step fabrication and assembly instructions—not very different from the instructions included in a model airplane kit or furniture assembly box.

Complicated steel structures may include separate erection schemes and temporary shoring drawings, but these documents still fall under the requirements for shop and working drawings.

The steel fabricator is usually the one who prepares all the shop and working drawings for a steel structure.

Shop and Working Drawings Reviews

Like all shop and working drawings, the Contractor needs to allow for sufficient review time of the shop drawings before scheduling fabrication (see Subsection 105.03). The Resident Engineer should do an initial review of all shop and working drawings as recommended in Subsection 105.03 of this manual. Then shop drawings should be forwarded to the Designer of the steel structure (either a design consultant or a design team within ADOT) for final review and approval.

Once approved, two copies of all shop and working drawings should be sent to the Bridge Project Engineer in Bridge Group assigned to oversee the project. The Bridge Project Engineer will forward approved drawings to the shop Inspector who would oversee the shop fabrication of the steel structure for the Department. A copy should also be given to the Inspector.

The fabricator's detailed shop and erection drawings, after approval by the Designer of the steel structure, become a part of the Project Plans and are used in place of the Project Plans insofar as fabrication and erection details are concerned. If the Inspector or Resident Engineer finds something in the Project Plans contrary to what is shown in the approved shop and working drawings, the Designer of the steel structure should be called for clarification.

Reproducible shop drawings (mylars or sepias) must be included with the as-built plans for any bridge structures (refer to Subsection 105.03 Standard Specifications).

604-3.04 Shop Inspection

Subsections 604-3.02 and 604-3.04 require the Contractor to make arrangements with the Department for shop inspections of structural steel components. Written notice can take the form of a shop drawing submittal, a letter if the shop drawings are not ready, or a note in the weekly meeting minutes. The key is to give adequate notice—at least three months so Shop Inspectors can be scheduled for the work.

Bridge Group is responsible for all shop inspections of steel structures except for steel poles. They use on-call consultants to provide Shop Inspectors at the fabricator's plant.

604-3.06 Welding

Most welding on steel structures is done in the shop. ADOT's Shop Inspectors are certified by AWS to inspect shop welds. It is rare for welding to be done in the field, but when it is, it should comply with the following welding policy.

ADOT Welding Policy

1. Welding done on any structural steel, rebar, or other metal components on any ADOT structure must be done in accordance with the Bridge Welding Code (see references). Copies of the Code are available from Bridge Group, Materials Group, and the ADOT Library.

2. All welding, regardless of where it is done (shop or field) or what components are welded (rebar, steel, or other metals), must be done by an AWS certified welder. This includes temporary steel structures such as falsework and underground shoring. Contractors must submit copies of current AWS certification for all welders to the Resident Engineer before any field welding begins.

3. All shop welds must be inspected and approved by an AWS Certified Welding Inspector. An AWS Certified Welding Inspector must inspect certain field welds. They include welds for:

   A. any bridge component (except for very minor bridge elements like sole plates);
   B. any traffic barrier system such as bridge rail, guardrail, impact attenuation systems, and handrails (barriers such as right-of-fence and other fencing used to restrict access are excluded); and
   C. any structure or structural member in which failure of the weld would risk public safety (such as sign or mast arm falling on the road). This would include, but is not limited to, overhead sign structure components, light and signal mast arms, and any overhead steel support brackets.

   AWS Certified Welding Inspectors are trained in X-raying welds and using other detection methods for precisely determining the integrity of a weld. Bridge Group has on-call Welding Inspectors that will visit the site to inspect field welds. The Resident Engineer should schedule any welding inspections through the Bridge Project Engineer assigned to monitor the project.

4. No field welding is to be done without the approval of the Steel Structure Designer. Structural pieces that are too long or too short should not be torch cut or spliced in the field just to speed up erection. Steel members that do not fit should be sent back to the shop for alteration.

604-3.08 Erection

Site Inspection

Steel erection often involves lifting equipment, safety hazards, traffic control, and a deluge of documentation. For large steel structures such as bridges, the Resident Engineer and the Contractor should have a pre-erection meeting to discuss erection procedures, traffic control, crew hours, safety procedures, paperwork, and inspection requirements. Inspectors need to have a copy of the *Manual of Steel Construction* and Section 11 of the *AASHTO Standard Specifications for Bridges* to verify steel shapes, connection preparation, and assembly procedures. They should also have a copy of all approved shop and working drawings.

Upon delivery, steel should be inspected for signs of damage and any such damage should be documented and reported to the Contractor. All steel members should be tagged or marked by the Shop Inspector to indicate their acceptance by the Shop Inspector. Untagged members should be brought to the attention of the Resident Engineer for further investigation. In general, the Shop Inspector will not tag hardware such as nuts, bolts, and bins since these items are to be inspected and sampled by the Inspectors at the project site.

The unloading of the steel must be accomplished by means of equipment and methods that will not damage the members. The steel should be moved by the use of slings and wood blocks to prevent damage to the flanges. Steel members should never be dropped.

Steel should be stored in a well-drained area that is in no danger of being flooded. The members should be handled and transported in an upright position. All beams and girders should be placed in an upright position on wooden blocks. Long members should be supported in a manner that will prevent damage due to excessive deflection. Deep members should be braced to prevent overturning.

The Contractor has to provide safe access for the Inspectors to do their inspections (see Subsection 105.12). This means that the Contractor will have to leave the fall protection equipment in place and provide the necessary access and equipment so that Inspectors can properly perform their inspections. ADOT is responsible for supplying Inspectors with the appropriate personal protective equipment, while the Contractor must provide the fall protection system and any lifting equipment necessary to inspect the work.

Bearings

Before the erection of structural steel begins, the centerline of bearings should be laid out and marked on all substructure units. Bearing areas should be checked to verify that a plane surface will provide uniform contact with the steel at the correct elevation. If the concrete surface that will be in contact with the bearing pad is rough or irregular, it should be ground flat to provide full and uniform bearing.

If a bearing area is low with respect to other areas on the unit or in relation to other units of the structure, shims of the same size as the bearing plate may be needed to adjust the bearing plate elevation. Avoid using a number of thin shims if a single one of the required thicknesses can be made from plates of standard thickness. The shims should be made from the same type of steel as that specified for the bearings. If shims are needed, approval from the Structure Designer and Bridge Group will be required.

Assembly

During erection, the Inspector should verify that all members are placed in their proper position in the structure by checking match marks or identification marks on the members with the location shown on the erection drawings.

Bearing surfaces and metal surfaces in contact with each other must be free of rust, loose mill scale, dirt, oil, or grease.

Any contact surfaces of beams, girder splices, or main truss connections to be connected by high strength bolts must be free of paint or lacquer. Primer is usually acceptable.

The steel should fit together with very little strain or distortion. If bolt holes are only slightly out of alignment, usually it is possible to bring the pieces into their proper position with drift pins. However if the holes fail to line up properly (to the extent that forcing the drift pin through would result in enlargement of the hole or distortion of the metal), the holes may be re-drilled or reamed, but only with the approval of the Designer.

Any fabrication error that cannot be corrected by a slight amount of drifting, drilling, or reaming is cause for rejection of the material. Heavy sledging of the parts to bring them into alignment or making any cuts or adjustments with a burning torch must not be permitted.

No hole reaming, field bending, or straightening of structural steel members will be done without the approval of the Designer and Bridge Group.

Any heating of steel members to facilitate bending and installation must have the prior approval of Bridge Group. Applications of heat to structural steel must be done under rigidly controlled, predetermined conditions that may require different controls for the various members.

All of the above practices, if not done carefully, will weaken the steel through metal fatigue from excessive bending; net section removal from too much drilling and reaming; or re-crystallization from overheating.

The entire structure or as a minimum, an entire unit of continuous spans, should be assembled, drift pinned, bolted, and adjusted to the proper grade and alignment in accordance with the erection drawings before permanent connections are made. If high strength bolts are to be used for the permanent connections, they may also be used for this "fitting up." Splices and field connections must have one-half of the holes filled with bolts and pins before bolting up with high strength bolts.

Elevations on tops of erected bridge girders must be checked and any necessary adjustments made to the slab build-up as noted on the bridge plans.

Connections

Inspectors must pay close attention to how connections are bolted or welded. One of the primary goals of any Inspector of a steel structure is to ensure that the connections are not the weakest link in the structure. Subsection 604-2.03 discusses the requirements for bolted connections while Subsection 604-3.06 discusses the requirements of welding. The shop drawings will detail how connections are to be made and what hardware is to be used. Inspectors must take an active role in inspecting all connections and carefully observe and document the Contractor's workmanship.

Final Alignment

Due to fabrication tolerances and inaccuracies in laying out the bearing locations, it is sometimes necessary to make slight adjustments in the position of the bearings after the erection is complete. Proper clearance between structural units and the correct opening for expansion devices are required. If the expansion bearings are of the rocker type, the rockers are adjusted according to the prevailing temperature so they will be vertical at the standard temperature shown on the Project Plans (usually 70 °F [22 °C]).

605 STEEL REINFORCEMENT

605-1 Description

Reinforced concrete is a mixture of concrete and steel reinforcement. Concrete is weak in tension and cracks easily when it shrinks or creeps under sustained loading. It is a brittle material. When concrete fails, it breaks suddenly without warning. Steel, on the other hand, is 100 times stronger in tension than concrete; is 6 times stiffer; and will stretch 17 times more than concrete before failing. Steel reinforcement provides reinforced concrete the tensile strength, stiffness, and ductility needed to make it an efficient, durable, versatile, and safe building material.

For reinforced concrete to work as the Designer intended, the Inspector and Resident Engineer must ensure that reinforcing steel placed in a structure is:

- the correct grade and type of steel;
- the correct size, shape and length;
- placed in its specified location and spaced properly;
- tied and spliced together properly;
- clean and will get an adequate cover of concrete in all directions; and
- placed in the correct quantities.

Primary and Secondary Reinforcement

In any reinforced concrete structure, the reinforcing steel can be divided into two categories. *Primary reinforcement* is the steel in the concrete that helps carry the loads placed on a structure. Without this steel, the structure would certainly collapse. *Secondary reinforcement* is the steel placed in a structure that enhances the durability and holds the structure together. It provides the resistance to cracking, shrinkage, temperature changes, and impacts necessary for a long service life of the structure. Primary reinforcement can be thought of as the steel that holds up the structure while secondary reinforcement can be thought of as the steel that holds a structure together.

For example, the bottom mat of rebar and the truss bars in a bridge deck are intended to function as primary reinforcement. They resist the tensile stress that is induced by the bending of the deck as vehicles pass over it. If this steel was not there, the concrete could collapse and a vehicle could fall between the girders. On the other hand, the steel in the front face of a cantilever retaining wall functions more for crack and shrinkage control. Its main job is to hold the concrete together. It's the steel on the backfill face of the wall that helps the structure retain the soil.

It's important for the Resident Engineer and Inspector to become familiar with the primary and secondary steel reinforcement in structure. Not only does this help the Inspector visualize how the steel should look, but it helps in getting compliance from the Contractor by being able to discuss the reasons for good placement procedures and how each bar in the structure is intended to function. The Designer can help identify which steel is primary and which is secondary reinforcement.

Reinforcing Steel Changes in the Field

Contractors may request changes in how reinforcing steel is specified and designed to facilitate construction. These changes can include:

- moving bars;
- bending bar;
- substituting bars for different sizes, grades or types;
- cutting or torching bars;
- welding bars; and
- using different splice details or splice locations.

Any requests that would change the location, size, shape, type, grade, length, or splice location of any bar must have the approval of the Designer of the structure. In fact, any request (written or oral) that would change the design of the steel reinforcement in a structure must have the approval of the Designer. As mentioned earlier, steel reinforcement can be divided into primary and secondary reinforcement. Even minor changes in either category can have a profound impact on the behavior and longevity of the structure. This is why it is important to contact the Designer on rebar changes so the impacts can be accurately assessed and accounted for in the design.

The Resident Engineer can deal with changes in how steel is tied, cleaned, supported, stored, and handled with input from Bridge Group and Materials Group, as needed.

605-2 Materials

Steel bars, steel wire, welded wire fabric, and other structural steel shapes used as reinforcement must be certified as conforming to the specifications before being covered with the concrete. In addition to the certification requirements, random samples must be taken by the Inspector in accordance with the *Materials Testing Manual*, Sampling Guide Schedule and the *Materials Policy and Procedure Directives Manual* (PPD No. 92-2). PPD No. 92-2 is an excellent guide for identifying the type, sizes, and grades of reinforcing steel and discusses the sampling and certification requirements in much detail.

One important point about rebar sampling that should be stressed: precut bars furnished by the supplier as "sample bars" are not acceptable. Sample bars must be removed from a steel shipment at random when delivered to the project site. The Department now requires only one copy of the certificate of compliance for steel reinforcement.

Steel Type, Grade, and Bar Size Substitutions

Most reinforcing steel for ADOT structures is specified as Type A615M (billet steel), Grade 420. Occasionally the Contractor may want to substitute A706 steel for the A615 type. This kind of substitution is generally acceptable as long as the grade of steel stays the same or is better and there are no changes in bar sizes or lengths. A no-cost minor alteration should be executed with the concurrence of the Structural Designer and Materials Group. Other types of reinforcing steel such as ASTM A616 (rail steel) and A617 (axle steel) are not acceptable substitutes.

Contractors may always furnish Grade 420 steel when Grade 300 is specified. However if the Contractor proposes to use Grade 520 steel for Grade 420, the Structural Designer and Bridge Group should be contacted for their approval. Grade 520 steel has a much higher yield strength than Grade 420 and could adversely affect how a structure behaves during a failure.

The Designer must approve all changes in bar sizes. Even when the Contractor wants to substitute larger bar sizes over what is specified, check with the Designer. Larger bars can cause clearance problems and in some cases may lead to over-reinforcement of a concrete section (a violation of AASHTO bridge specifications).

Welded Wire Fabric (Wire Mesh)

Wire mesh is sometimes specified by a Designer to control shrinkage and cracking in a concrete slab or wall. Information on identifying and placing wire mesh can be found in the CRSI *Manual of Standard Practice* referenced at the end of this chapter (a copy is available at Bridge Group and the ADOT Library).

605-3 Construction Requirements

605-3.01 General

Every Inspector that regularly inspects reinforcing on an ADOT project should have the latest copy of *Placing Reinforcing Bars* published by the CRSI (see references).

Bar Bending Diagrams, Bar Lists, and Cut Sheets

Although bar bending diagrams are shown in the Project Plans, it is not a common practice for the Designer to show bar lists in the Project Plans. A sample bar list (or cut sheet as they are known locally) is shown at the end of Chapter 8 of *Placing Reinforcing Bars*. The Contractor needs to submit the bar lists for a structure to the Resident Engineer prior to fabricating the reinforcing steel. The intent is to get the Inspector and the Resident Engineer to review these lists <u>before</u> the steel is made and shipped to the project. This proactive approach will help prevent any delays to the project due to bars that have been cut the wrong length, bent the wrong way, or specified as the wrong size. Waiting until the steel arrives on the job to begin checking bar dimensions is a reactionary practice that the Department would like to avoid.

Bending, Heating, and Cutting Bars

Contractors may want to field bend bars to simplify reinforcing steel installation or to improve access around a structure. Grade 40 bars smaller than # 8 can be bent out of the way and then re-bent to their final shape.

The Contractor can only bend # 8 and larger bars once and any bars made from Grade 60 steel. This means that they cannot be bent then re-bent once they are no longer in the way. The bars cannot be bent temporarily to accommodate other construction activities. Furthermore if the bars have already been bent once in the shop, no further bending is allowed in the field. Bending these bars more than once weakens the steel at the bends due to metal fatigue. (This is similar to what happens every time you bend a coat hanger or a paper clip back and forth—the repeated bending action weakens the steel until it breaks.) Heating the steel to bend it is not acceptable. The heat, if not strictly controlled and closely monitored, produces a metallurgical change of the steel. This change is called a *notching effect* because too much heat will cause a permanent and local weakening of the steel's crystalline structure just like an actual notch in the steel.

If bars have to be bent, there is a minimum bending radius that the bars must meet or exceed. The minimum radius, which depends on the bar size, can be found in Design Aid 2.13.1 of the ADOT *Bridge Design and Detailing Manual*.

Cutting or torching bars because they are a hindrance to steel installation or concrete placement must not be allowed without the approval of both the Structure Designer and the Resident Engineer.

Cutting the bars and then splicing them after they are out of the way is another practice that should be discouraged. The problem with cutting the bars and then splicing them has to do more with the splicing than the cutting of the bar. If the bar has to be spliced, the type of splice and the location of the splice should be

discussed with and approved by the Designer before the bar is cut. Many times, Contractors want to cut rebar at locations where stresses in the steel are too high or insufficient bar length is available after the cut to fully develop the splice. These are the reasons why the Designer must be involved in any bar cutting decisions.

Rusty, Oily and Dirty Rebar

Actually rust is not detrimental to rebar unless the amount of rust is so excessive that it flakes off the bars or reduces their cross-sectional area significantly. Oil, dirt, and loose mortar are the most detrimental to rebar since all three reduce the adhesion between the steel and the surrounding concrete.

Oil, especially form oil, acts as a bond breaker. When this gets on the bars, the Inspector has no choice but to insist upon its removal. Removal may be done with petroleum-based solvent such as naphtha, gasoline, or diesel fuel. A hand-held torch can be used to lightly heat up the bar and burn off the oil.

Loose mortar, dirt, and mud can weaken the bond between the steel and concrete. The steel should be wiped or washed clean of these contaminants. In severe cases, wire brushing may be needed especially on any primary reinforcement. If a small amount of mortar in random locations is tightly bonded to the steel so that vigorous wire brushing cannot easily remove it, the mortar is probably acceptable. However check with the Resident Engineer before approving the steel.

Rebar Cover and Clearance

Reinforcing steel must have adequate concrete cover near any exposed surface. This cover is needed to prevent corrosion of the reinforcing steel due to moisture, atmospheric conditions (like high humidity), and reactive soils.

The Project Plans should clearly indicate the amount of cover required for reinforcing steel. If the Plans do not, the Designer should be contacted. AASHTO and ACI have minimum cover requirements on all reinforcing steel. As a guide, consult Chapter 10 of Placing Reinforcing Bars (see references), which has an excellent section on concrete cover requirements.

Adequate clearance is needed between reinforcing bars so all of the concrete mix can completely surround the bar. When bars are spaced to close together, two things can happen:

1. An air void can develop between the bars because there is not enough room for the concrete to flow between the bars. This void severely weakens reinforced concrete locally because there is no concrete bonded to the steel. The void also causes stress concentrations in the surrounding concrete because the concrete must transfer additional stresses that the void cannot.

2. The area between the bars is filled only with mortar, and is void of coarse aggregate. The problems with only having mortar between the bars include:

    A. a reduced shearing strength in the mortar due to the absence of coarse aggregate;
    B. increased stresses in the steel as the mortar tries to shrink around the bars in the absence of course aggregate; and
    C. surrounding areas of weakened concrete that have too much coarse aggregate and not enough mortar.

ADOT's Standard Specifications do not specifically limit the clearance between individual bars. Instead Subsection 1006-3.01 limits the maximum size of coarse aggregate in the concrete mix based on the minimum rebar clearance. In other words, the Contractor must adjust the concrete mix design to fit the minimum rebar clearances in the structure. The Inspector's responsibility is to check areas of minimum rebar clearance and verify that the Contractor's concrete mix will meet Subsection 1006-3.01 (you'll need to examine the mix design to do this). If the mix does not, either the Contractor submits a new mix design or the Designer is contacted about moving bars so the Contractor's mix can adequately coat the bars. See "Steel-Reinforcement Placement" in subsection 601-3.03 of this manual for a detailed discussion and example of how to calculate the required rebar clearance for a given mix design.

Common locations where rebar congestion is a problem are:

1. lap splices of longitudinal bars and

2. column and cap beam connections where the cap beam reinforcing steel crosses the column steel protruding into the cap.

Tolerances for Cutting, Bending, and Placing

As soon as reinforcing steel is delivered to the project, it should be sampled in accordance with the Sampling Guide. The Inspector should determine if the bars are of the proper size and length and if the bends and bend dimensions are in accordance with the Project Plans and the tolerances shown herein. After placement of the steel in the structure, a complete final inspection must be made and documented.

In the cutting, bending, and placing of reinforcing steel, it is recognized that it is not reasonable to require all bars to be cut, bent, and placed precisely as shown on the Project Plans. On the other hand, the strength of each member of a structure is dependent upon the cutting, bending, and placing being within reasonable tolerances. Because of these facts, the Department has adopted allowable tolerances that are considered reasonable and practical to meet yet will not significantly reduce the strength of the structural member below the theoretical design strength.

<u>Cutting and Bending Tolerances</u>

The following tolerances are based on industry standards established by the Concrete Reinforcing Steel Institute (refer to Chapter 6 of Placing Reinforcing Bars).

1. Cutting to length on straight bars: ±1 inch (25 mm).

2. Hooked bars, out-to-out: ±1 inch (25 mm).

3. Truss bars, out-to-out: ±1 inch (25 mm). The height (H) or drop (rise): ± 1/2 inch (13 mm). Bend down points and bend up points shall be within 2 inches (50 mm) of position indicated on the Project Plans.

4. Spirals or circles ties, out-to-out dimension: ±1/2 inch (13 mm).

5. Column ties or stirrups, out-to-out dimension: ±1/2 inch (13 mm).

Subsection 105.05 applies to reinforcing steel just like it does to all other construction materials and workmanship. Bars that are consistently too short or consistently bent to the wrong dimensions are cause for rejection. Improper cutting and bending can also result in failure to meet placement tolerances in the forms.

Placement Tolerances (Refer to Subsection 606-3.01)

1. Height of bottom bars above forms shall be as indicated on the Project Plans, ±1/4 inch (6 mm).

2. Top bars shall have the clearance indicated on the Project Plans, ±1/4 inch (6 mm).

3. Clearance from forms on vertical walls, columns, wings, and similar members shall be as indicated on the Project Plans, ±1/4 inch (6 mm).

4. Spacing of bars in long runs of slabs or walls may vary up to 2 inches (50 mm), but it is important that the proper number of bars is placed.

The effectiveness of the reinforcement and the strength of the structure are dependent upon the reinforcing bars being placed in the concrete in nearly the exact position shown on the Project Plans. If they are not placed as shown, the structure will likely not have the strength that the Designer anticipated. For example; when the depth (H) of all truss bars in a structural concrete member is 1/2 inch (13 mm) less than shown on the Project Plans, the strength of that member is reduced from 15 to 25 percent.

The correct position of the steel, in relation to the tension face of the concrete, is of great importance. If it is too far away from the face, the strength of the member will be adversely affected. If the position is too close, particularly in bridge decks, water and de-icing chemicals penetrate to the steel and cause it to rust. The rusting process causes an expansion in the volume occupied by the steel that will cause spalling of the concrete.

Sometimes cover problems with reinforcing steel are the results of errors in the formwork rather than errors in steel placement. If a cover problem does not seem to be the result of improper rebar installation then check the dimensions of the forms for the correct forming tolerances.

Bar Supports

Adequate support for reinforcing steel must take into account not only the weight of the steel, but the stresses and strains encountered while placing the concrete as well. The Concrete Reinforcing Steel Institute publication, *Placing Reinforcing Bars*, contains recommended spacing for metal chair supports. Regardless of the recommendations, there must be enough supports to keep the reinforcing steel within the placement tolerances and to keep it from deflecting under construction loading (concrete pours and foot traffic usually) until it is covered with concrete.

Chairs should be observed to detect whether they are bending or are indenting the form material. It may be necessary to use more chairs or chairs with broader feet to carry the load exerted by the reinforcing steel and the ironworkers. Heavy rebar cages containing large bar sizes are candidates for bar support inspection by the Inspector. Wall and column reinforcement should be checked for adequate lateral support to prevent the reinforcement from being pushed against the forms during concrete placement.

The Resident Engineer and Inspector should pre-approve all bar supports and bar support methods in advance of any steel placement (preferably when the bar bending diagrams are approved).
If precast mortar blocks are used as bar supports, the blocks must have a compressive strength that meets or

exceeds the strength of the concrete poured around them. The Inspector must take one sample of precast mortar blocks for every 50 placed and send it to the Regional or Central Lab for strength testing.

Reinforcing Steel Inspection

The Inspector shall not permit the start of concrete operations on any portion of the structure until he or she has thoroughly checked all of the steel for conformance with the Project Plans and the following:

- number of bars
- spacing
- clearance
- cleanliness
- size
- splices
- tying
- length
- bends
- support

This inspection cannot be made in a few minutes and it cannot be properly made until all of the steel is in place. Therefore the Contractor must allow sufficient time for the Inspector to make this check when planning the start of concrete placement. The Contractor should be made aware of the time necessary for this inspection. If this matter is discussed at the preconstruction conference, the Contractor should be informed again just before he or she begins concrete and steel work.

Inspectors doing rebar inspection should have the latest edition of *Placing Reinforcing Steel*, published by CRSI (see references) available to them.

605-3.02 Splicing and Lapping

Reinforcing steel is often specified in lengths that are too long for the steel to be delivered and placed as a single piece. As a result, two or more pieces are often spliced together at the site to form one long single bar. The following are three methods that ADOT allows to splice rebar.

Lap Splices

Lap splices are formed when two bars are overlapped for a certain length and tied together. The length of the overlap is called the lap length and is specified in the Project Plans. A sufficient lap length is needed to adequately transfer loads between the bars. Lap lengths can be longer than specified, but never shorter. Inadequate lap length can cause severe cracking in the concrete around the lap.

Reinforced concrete is typically its weakest around the lap splices in the primary reinforcement bars. For this reason, lap splices are placed in areas where the stresses in a reinforced concrete section are the lowest. The Inspector must ensure that the Contractor laps reinforcing steel only in the places specified in the Project Plans and with sufficient lap length. If the Contractor wishes to move a lap splice, the Designer must approve the location change. In areas of high bending and tensile stresses, the Department should insist on using continuous bars or either mechanical or welded splices.

Lap splices can present problems with concrete cover and clearance between bars. Lap splices must have adequate concrete cover for corrosion protection just like continuous bars. It is important to ensure that the spacing between the lap splices allows for the adequate flow of concrete around the splice (see Subsection 1006-3.01). Sometimes the lap splices in a group of bars are staggered to reduce congestion at the splice location.

Designers and Contractors have joint responsibility to ensure that lap splices are workable in terms of spacing

and adequate cover. The Designers need to ensure that lap splices will fit within the dimensions of a concrete member. Concrete cover must be adequate and rebar clearance must take into account a reasonable coarse aggregate size. If lap splices do not work, alternatives such as resizing the member, stagger splices, or a different splice detail should be specified. Contractors, on the other hand, have a responsibility to identify congested rebar sections on the Project Plans and adjust their concrete mix design accordingly. They also have a responsibility to place lapped bars well within the allowable placement tolerances when congestion at a lap splice is a problem.

Non-Contact Lap Splices

When a precast member is structurally connected to a cast-in-place concrete member or another precast member, the rebar from both members is lap spliced together to ensure adequate stress transfer across the two members. Sometimes due to the positioning of the precast member or because of placement tolerances in the reinforcing steel, the lapped bars do not end up touching each other at the splice. In other words, there is a gap between the two bars at the lap splice. The Designer must approve any *non-contact laps* that are not shown on the Project Plans.

When non-contact laps are permitted, the bars must not be spaced too far apart or a zigzag crack in the concrete may develop between the bars. Usually the gap is limited to the lesser of 1/5 the lap length or 6 inches (150 mm). Non-contact laps are generally permitted in secondary reinforcement and in some minor structures. However they should not be allowed as an alternative to chronically poor workmanship.

Mechanical Couplers

When mechanical couplers are used to splice rebar, the couplers should be submitted to the Department ahead of time for approval. Couplers shown on the ADOT Approved Products List do not need to be pre-tested. Couplers not on the list should be pre-tested by ADOT Materials Group before they are covered with concrete.

For each type of mechanical coupler used, the Inspector should have the manufacturer's recommendations on how to make field splices. It is part of the Inspector's job to verify that the Contractor is following the manufacturer's recommendation for making mechanical splices.

It is also the Inspectors responsibility to sample mechanical couplers in accordance with the Subsection 605-3.02 even if the mechanical couplers have been pre-approved. The samples must be taken at random and <u>after</u> the splices have been made. The samples should be sent to Materials Group for testing. The Contractor is entitled to no additional costs for providing samples of mechanical splices used for testing or for the cost of repairing the rebar where the samples have been taken (see Subsection 605-4.02 and 605-5).

Welding Rebar and Welded Splices

Most rebar is specified as ASTM A615 steel. There are no strict controls on the chemical composition of the steel as long as the desired mechanical properties are met. Because there are no strict chemical controls, heating this type of steel for welding or cutting purposes can adversely alter the chemical composition of the steel. The steel can become permanently weakened and brittle due to the applied heat. As a result, most construction specifications (including ADOT's) prohibit the welding and torching of A615 rebar. Like a chain, a piece of rebar is only as strong as its weakest link so even minor tack or spot welding is prohibited.

Tack welding is not permitted unless approved in writing by the Engineer. When welding is permitted, ASTM A706 steel must be used and the welding must be performed by an AWS certified welder. Butt-welded splices

are the only acceptable welded splices.

The welder should have the correct mill test report (chemical analysis) from the heat in which steel was made. Welding procedures do change to reflect the actual chemical composition of the steel. This test report should be included in the Certificate of Analysis.

No welding should be performed near prestressing strands without protecting the cable from welding splatter. Even the slightest nick or burn mark in the strands is enough to cause failure during tensioning.

Chapter 10 of *Placing Reinforcing Bars* contains additional information about rebar splices.

Changing the Type of Rebar Splice

For placement reasons, safety reasons, or for other constructability reasons, Contractors may want to use mechanical couplers or welded splices in place of lap splices. Subsection 605-3.02 gives the option to the Contractor of what type of splice to use as long as the Department approves the splices. The Designer may show only lap splices, but the Contractor may need to change the type of splice to make the steel easier or safer to place, lift, and handle.

Just because lap splices are shown, doesn't mean the Contractor is limited to this type of splice. The Contractor must choose the appropriate type of splice based on how he or she intends to construct the work. Changing lap splices to mechanical couplers or welded splices should be at no cost to the Department since the Standard Specifications clearly allow the Contractor other splicing options. The Contractor's selection of a different splicing option is not a changed condition unless the Project Plans or Special Provisions specifically preclude other splicing options.

605-3.03 Epoxy-Coated Reinforcement

When epoxy-coated steel reinforcement is specified, Inspectors need to be watchful in how the Contractor handles the bars. Scratches, nicks, and other marks are to be kept to a minimum. Don't allow the Contractor to mishandle the rebar with the intent of fixing any damage to epoxy coating later. The intent of Subsection 605-3.03 is to avoid mishandling the bars in the first place. Repair procedures should only be allowed for the occasional accident.

For the epoxy coating to prevent rebar corrosion, the entire bar supports (i.e. chairs, tie wires, and mechanical couplers) must be corrosion proof. It makes no sense to support an epoxy-coated bar on a bare-metal chair. The Resident Engineer and Materials Group must pre-approve all bar supports, couplers, and tie wires for epoxy-coated rebar. The Contractor should submit samples and product literature well in advance of any placement work.

It is the Department's policy not to allow any metal bar supports or metal tire wire (coated or uncoated) for epoxy coated rebar in concrete barrier wall. Non-metallic supports and tie wire must be used since the steel in a barrier wall is highly susceptible to corrosion.

The CRSI has an excellent inspection guide for epoxy-coated rebar, which is referenced at the end of this chapter.

605-4 & 5 Method of Measurement & Basis of Payment

Most reinforcing steel is paid for as part of a lump sum structure item or is included in the cost of another contract item. Rarely is an ADOT contract setup to measure reinforcing steel on weight basis. However when there is a quantity dispute or additional work under a lump sum payment provision (605-4.02), the weight basis (605-4.03) is used to measure reinforcing steel to equitably adjust the contract amount.

Even when reinforcing steel is measured on a lump sum basis, the Inspector should still collect the cut sheets that accompany each steel shipment and note any quantities used for placements, aids, or left out of the structure. The date and time the steel was placed in the structure should be noted. This process should not be much different than collecting concrete tickets, where the Inspector tracks the concrete quantities, placement location, and waste.

Tracking steel quantities as steel is placed is important for heading off quantity disputes. Often these disputes arise because the quantity shipped to the project is different than the quantity shown in the bidding schedule or Project Plans. However Inspectors need to keep in mind that there is a yield factor that applies to rebar similar to the yield factor that applies to ready mixed concrete. With rebar, there are end pieces that are not used, bars that are used as placement aids, and waste from rebar cutting. Sometimes even extra bars are sent at the Contractor's request to replace damaged bars previously shipped.

Inspectors don't need to document every single bar placed in a structure, but they do need to scrutinize cut sheets and other shipping documents and note any quantity discrepancies as steel is placed.

606 OVERHEAD SIGN STRUCTURES

Sign structures are designed to stand up under severe wind loads. When a sign structure collapses, falling sign panels and steel members can severely injure passing motorists. As a result, Inspectors must use the same level of care when inspecting a sign structure that goes into inspecting a bridge.

606-2 Materials

All of ADOT's sign structures are made of structural steel. Section 604 of this manual on steel structures discusses the requirements the Contractor must meet for any steel. Section 605 provides more information on reinforcing steel requirements.

The non-shrink grout used under the support anchor plates serves a very important function in the structure. The grout ensures uniform contact pressure between the base plate and the sign foundation. The grouting operation needs to be carefully observed to be sure that the grouting is properly done and conforms to the manufacturer's recommendations. The ADOT Approved Products List specifies which non-shrink grouts are pre-approved for use by the Contractor. The Inspector must get the manufacturer's recommendations for the grout and ensure the Contractor carefully follows those recommendations.

606-3 Construction Requirements

Much of the construction requirements for sign structures are the same for steel structures. Refer to Subsection 604-3 of this manual for additional information.

Sign structures are fabricated and erected in accordance with approved shop drawings. During shop drawing development, the Contractor must obtain as-built elevations of the sign foundations so that the columns are fabricated to the corrected length. The Inspector must have a copy of the approved shop drawings to adequately inspect the erection operations. Shop drawings will show any erection procedures that must be followed including splicing methods and connection requirements.

The Resident Engineer must approve any welding that must be done in the field. See ADOT's Welding Policy in Subsection 604-3.06 of this manual for additional requirements when welding on ADOT projects.

Sign bridges and supports are generally inspected at the manufacturing plant. However the Inspector should still inspect all the structural elements on the job. If any element differs from the Project Plans, the Bridge Project Engineer and the Designer of the sign structure should be advised. If the welding appears inadequate, Bridge Group can have an AWS certified welder come to the project site to inspect the welds. All galvanized metal should be examined by the Inspector for damage and uniformity. Unacceptable areas should be brought to the Resident Engineer's attention before rejecting the sign structure.

Inspectors should check the height of the sign structure above the roadway to verify the signs and the sign structures meet the minimum height requirements shown on the Project Plans.

606-3.05 Foundations

Foundations for sign structures are treated as drilled shafts and constructed in accordance with Subsection 609-1 through 609-3. Refer to Section 609 of this manual for information on drilled shaft construction. Requirements for concrete work fall under Section 601 and include:

Concrete placement	-	Subsections 601-3.03(A), (C) & (D)
Concrete finishing	-	Subsections 601-3.05 (A) & (B)
Concrete curing	-	Subsections 601-3.06 & 1006-6.01.

607 ROADSIDE SIGN SUPPORTS

Breakaway, perforated, and U-channel post are the 3 main types of sign support. Sign supports are designed to minimize damage and injury during a crash. They may become a safety hazard if not installed properly. Signing and Marking Standard Drawings S-1 through S-11 show where and how the various types are typically installed. Sign locations should be staked as soon as possible in order to allow as much time as possible for fabrication of the sign supports.

Usually sign post lengths are determined by the Department based on the survey information provided by the Contractor. The procedure is for the Resident Engineer to collect the survey information on the sign foundations from the Contractor's surveyors and forward this information on to the Sign Designer for the project. However to do this, the Contractor should have most of the shoulder grading complete before staking. Otherwise errors in sign foundation elevations and signpost lengths can occur.

The Designer determines the appropriate post lengths and returns this information to the Resident Engineer who passes it on to the Contractor.

Breakaway Sign Supports

Breakaway signposts can be a tricky item for Resident Engineers. Pay attention to where breakaway signpost are called for in the Project Plans, but pay closer attention to how slopes are built around those locations. Many errors in breakaway sign installations can be traced back to changes in slope work that did not conform to the Contractor's staking plan.

Breakaway sign support foundations are set so that the top of the concrete footing is flush with the ground and the top of the slip base is 2 1/2 to 3 inches (65 to 75 mm) above the concrete. The tops of concrete footings are sloped or rounded to drain (see Signing and Marking Standard Drawing S-5). It is important that the Contractor does not pour breakaway sign foundations until the slopes are nearly complete. The sign foundation elevations must be based on the finished slopes (including topsoil plating). Do not regrade the slopes immediately adjacent to the sign foundation to match the sign foundation elevation. This can create a bump or dip in the slopes near the foundation that aggravates any vehicle collision with the sign.

After all topsoil plating and final grading work is finished, check the footings again to be sure that the tops of the footings are clean and that no dirt or debris remains on or around the stub post or slip plate assembly. The posts must be free to move when hit.

Bolts for fuse plates and base mounts are required to be torqued. The amount of torque and the tightening procedure are shown in the Standard Drawings. Subsection 604-2.03 of this manual has additional information on torque wrenches and torquing requirements not covered in the Standard Drawings.

Tightening bolts on breakaway sign bases requires close inspection. If the bases are not tight enough, the sign can "walk off" the plate under repeated wind loading. If over-tightened, the breakaway feature will not work.

608 SIGN PANELS

The Standard Specifications require all the materials used to make a sign panel to be certified. The Resident Engineer should prepare a list of certificates of compliance and analysis required for all sign structures, panels, and supports for the Inspector. The list will help ensure that all signing materials comply with the Special Provisions and the Standard Specifications. With sign panel certificates, it is important that each certificate properly identify the sign materials used on the project and that all items of the panel comply with the appropriate specifications. See the *Materials Testing Manual* for the proper formatting of Certificates of Compliance.

The Traffic Engineering Group is available for advice and assistance relating to all phases of sign installation and will make a final inspection of the completed work upon the Resident Engineer's request. Seeking their assistance is highly recommended since signing requirements change often and many potential problems are caused by subtle changes that require experience to detect. Although the change may seem minor, it could compromise safety or increase maintenance cost.

When stored out-of-doors, sign panels must be elevated and otherwise protected as needed to prevent soiling of the lower parts of the panels.

Inspection of mounted panels in daylight and at night is necessary to detect variations in color, brightness, or reflectivity over the face of the panels. Panels are rejected if they fail to meet the rigid visibility requirements. The Traffic Engineering Group can help determine when sign panels fail to meet visibility requirements.

Signs are expensive and designed to last for a long time. They are viewed continuously by the traveling public (our customers) so even minor variations in the specified appearance, color, brightness, and reflectivity should because for rejection and alterations.

609 DRILLED SHAFT FOUNDATIONS

609-1 Description

A drilled shaft is a deep circular hole in the ground filled with reinforced concrete. The drilled shaft transfers the weight and loads on a structure to soils and bedrock deep underground. Drilled shaft depths can range from 6 feet (2 meters) for pole foundations to 130 feet (40 meters) for bridge foundations.

A drilled shaft transfers loads to rock and soil by one of the following methods:

1. The shaft transmits loads to the ground by the friction developed between the outside vertical surface of the shaft and the adjacent rock or soil. This is called a *skin-friction* drilled shaft.

2. The shaft transmits loads to a layer of bedrock or hard soil that the drilled shaft sits on. The loads are transferred through the bottom of the shaft to the ground, hence the term *end-bearing* drilled shaft. Skin friction is not relied upon to transmit loads, although it may be present in an end-bearing drilled shaft. End-bearing drilled shafts are occasionally widened at the base to spread out the load. Underreaming to form a bell-shaped shaft tip does this.

3. When a drilled shaft is designed to transmit loads by a combination of end-bearing and skin friction, the shaft is designated as a *combination end-bearing, skin-friction* drilled shaft.

The most common type of drilled shafts is the skin-friction type. End-bearing shafts are not as common because of the additional cost of underreaming (forming the bell shape) and the need to send an Inspector down in the hole to inspect the bottom of the shaft. Combination end-bearing, skin-friction shafts without bells are becoming more common as Foundation Designers get better at predicting end-bearing capacities for soil and rock.

Construction Procedures Are Critical

Unlike driven piles, drilled shafts are more reliant on a multitude of construction procedures any of which could severely reduce the capacity of the shaft if not followed properly. As a result, the inspection of drilled shafts is much more demanding on the Inspector than pile driving. Inspectors must have a wider range of skills including soil identification, rebar inspection, concrete testing, and equipment familiarity.

To quote from *Drilled Shafts: Construction Procedures and Design Methods* (see references), "The most frequent cause of drilled shaft failures are almost always attributed to improper construction procedures." With this in mind, inspection must play a very active role in drilled shaft construction. Any Inspector assigned to a drilled shaft operation must have plenty of prior experience in this type of work. Inspectors who are inexperienced at doing a drilled shaft inspection should not be leading such a critical operation.

609-1.03 Installation Plan

The Contractor must submit a detailed installation plan describing the equipment and tools to be used and the methods for constructing the drilled shaft. The amount of detail required should depend upon the anticipated site conditions and the complexity of the drilled shaft operation. An installation plan fulfilling all twelve points listed in the Standard Specifications should include sketches and equipment information. If drilling slurry is to be used, the plan submitted may be quite large.

The intent of submitting a drilled shaft installation plan is to get the Contractor and the Resident Engineer to plan

ahead of time on what materials, equipment, and methods will be used to construct the drilled shafts. The Department wants a well thought-out plan that demonstrates the Contractor is ready and capable of doing the work. Unlike mistakes in an above ground structure, mistakes buried 33 to 100 feet (10 to 30 meters) underground are not easy to detect and repair.

The Contractor must be permitted to freely adjust the installation methods as ground conditions warrant. However this need to rapidly adjust the drilling operation does not negate the need for an initial installation plan. The point of the installation plan is to ensure the drilling Contractor has adequately prepared for the work. This preparation helps minimize the Department's risk of having to deal with defective shafts because of haphazard and uncoordinated work methods.

The plan gives the Resident Engineer an opportunity to verify that the Contractor's work is in conformance with the Project Plans and Specifications and helps avoid those unpleasant surprises during drilling that could lead to a Department-ordered work stoppage or rejection. Of course, the more details the plan gives, the more likely that issues can be resolved ahead of time. Sketchy incomplete Project Plans, submitted just to meet a contract requirement, usually serve as a warning for many problems in the field.

Plan Evaluation

The Resident Engineer is responsible for reviewing and approving the installation plan. The Geotechnical Section of Materials Group or the Consultant Geotechnical Engineer for the project will help review the plan and establish guidelines. They even have sample Project Plans from previous jobs that can help the Contractor achieve a complete submittal the first time. However it is the Resident Engineer who must be satisfied that the plan is complete enough and in sufficient detail to allow the Contractor to proceed with the work.

If the Resident Engineer has not been involved with a drilled shaft installation before, it will be difficult to evaluate the suitability of the Contractor's equipment and installation procedures. Geotechnical Section can help with this. Keep in mind that the objective of the installation plan is not so much a verification tool for the Department as it should be a planning tool for the Contractor. The Resident Engineer's job is to ensure that the Contractor has adequately planned the work. If the Resident Engineer can't understand the plan because of vagueness, generalities, and lack of detail, chances are the drilling Contractor has no clear idea what is to be done.

Minor details omitted from the plan can be discussed in a preconstruction meeting. Major details such as the type of equipment used, rebar support and spacers, casing procedures for the hole, and drilling slurry procedures must be shown on the plan.

Preconstruction Meeting

Although it is not usually required by the contract, it is highly recommended that the Resident Engineer hold a preconstruction meeting prior to drilling for all but the simplest drilled shafts.

Points to cover at the meeting include:

- the details of the Contractor's installation plan, including any clarification required by the Resident Engineer;
- contract pay limits and method of measurement;
- inspection requirements, and assistance by the Contractor during inspections;
- contingencies for caving, groundwater, utilities, boulders, and other obstructions; and
- safety precautions.

The goal of the meeting should be that the Resident Engineer and the Inspector walk away with a clear understanding of the Contractor's installation plan and how the Contractor intends to construct the drilled shafts. At the same time, the Contractor should have an understanding of how the Department intends to inspect the shafts and how both need to work together so the Inspector can effectively do his or her work.

References

Space limitations in this manual prevent the reader from obtaining everything he or she needs to know to properly oversee and inspect drilled shaft construction. However there are three excellent references cited at the end of this chapter that can easily fill in the gaps.

The *Drilled Shaft Inspector's Guide* is a handy little booklet that every Inspector should have when inspecting drilled shafts. It concisely describes the drilled shaft construction processes and the Inspector's basic duties during construction.

Drilled Shafts: Construction Procedures and Design Methods is a comprehensive look at drilled shaft construction. It is definitely the industry bible and the most informative in explaining all the little but important details of drilled shaft construction. Each district office as well as field offices that do a lot of drilled shaft work should have a copy.

Chapter 6 and 9 of the *California Foundation Manual* are two other excellent sources of information on drilled shaft methods and inspection duties. Unlike the drilled shaft bible, which was written by two college professors, these chapters were written by practicing engineers and construction technicians. The information is concise and the explanations more descriptive. Copies are available from the ADOT library.

As with all references, ADOT's specifications override any construction specifications mentioned in these publications.

609-2 Materials

609-2.01 Concrete

Drilled shafts are one of the few reinforced concrete structures where the Department will let the Contractor get away with pouring "soupy" looking concrete. Fluidity of the concrete is very important for successful drilled shaft construction. Subsection 609-3.05 will have more to say about concrete properties for drilled shafts but for now it is important to remember that the mix design needs to be reviewed for compliance with Subsection 609-2.01 as well as for the following:

- the slump should be within the 5 to 6 inches (125 and 150 millimeters) for the dry, uncased holes and 8 ± 1 inch (200 ± 25 millimeters) for cased holes or when the concrete is placed in water or drilling slurry;
- the maximum aggregate size should meet the limits set in the Special Provisions or in Subsection 1006-3.01; and
- any other requirements specified in Section 1006 (see Subsection 1006 of this manual).

Aggregate size and grading, fluidity, and setting time are the most important characteristics of concrete for drilled shafts. These characteristics as well as strength, mixing uniformity, and segregation potential can be tricky to control in a concrete mix for drilled shafts. If the Contractor's concrete supplier has no well established history on using the proposed mix design, the Resident Engineer must insist on trial batches. Defective concrete in a drilled shaft is incredibly harder to diagnose and repair than concrete in an aboveground structure.

609-2.02 Reinforcing Steel

The inspection duties associated with drilled shaft reinforcing steel is no different than for reinforcing steel in other reinforced concrete structures. See Subsection 605-2 of this manual for more information.

Some drilling Contractors like to tack weld temporary rebar supports and cage stiffeners to the spirals or longitudinal steel. No welding should be done on rebar required by the Project Plans unless A706 steel is used (see Subsection 605-3.02). Any temporary supports and stiffeners should be removed before the cage is lowered completely in the hole.

609-3 Construction Requirements

Understand the Intent of the Drilled Shaft Design

Drilled shafts can be designed to transfer loads through skin friction on the outside walls, end-bearing of the shaft tip, or a combination of the two. The Resident Engineer needs to contact the Foundation Designer and to determine how the drilled shafts are designed and pass this information on to the Inspector(s).

Just as important, the Resident Engineer needs to find out which soil strata are intended to carry the loads from the shaft. Sometimes the soils near the surface are not relied upon to carry any loads and this is important to know if the Contractor wants to use permanent casing. Other times, the bearing strata can become damaged during drilling so it's imperative to know which soils are critical to the success of the drilled shaft.

Review Subsurface Information and the Contract Documents

Before any drilling is done, the Resident Engineer and the Inspector together, should review the subsurface information gathered from the geotechnical investigation of the project. It is not necessary to read all the reports from cover to cover. Instead the goals in reviewing these documents should be:

- to become familiar with the soils expected to be encountered including the soil type, the expected depth, and the classification system used to identify the soils;
- determine if there are any soil characteristics that could give the driller problems such as groundwater, an artesian condition, loose or caving soils, heaving soils, soils containing cobbles and boulders, or manmade features, such as landfill or an old foundation; and
- know any assumptions made by the Foundation Designer and the Geotechnical Engineer on how the Contractor is supposed to construct the drilled shafts.

Of course, the Special Provisions, Project Plans, and Standard Specifications should be read. Review of the references cited in Subsection 609-1 of this manual should be required for those not involved in drilled shaft construction for one year or more. The novice Inspector should refer to Section 2 of *the Workbook for Major Concrete Structures Inspection*.

609-3.02 Confirmation Shafts

For projects with unusual soil or groundwater conditions, a conformation shaft may be designated in the Project Plans or Special Provisions. The intent of this confirmation shaft is to validate the construction methods described in the installation plan. It is important for the Contractor to follow his or her own installation plan until changes become necessary.

The Inspector should carefully document the work including production times, down times, tools used, and the development of a concrete yield curve for the shaft. Any deviations from the installation plan should be noted.

Revisions to the installation should be required when site conditions are different than those assumed by the plan. The plan should be revised if the Contractor's actual methods are significantly different from those described in the plan. The next shaft would then become the conformation shaft for the revised plan.

609-3.03 Excavation

Before the Contractor drills any holes, any embankment that the drilled shafts pass through must be constructed. The Department does not allow any construction joints in drilled shafts near the surface. Drilled shafts are often designed for bending and most of the bending occurs within 10 to 20 feet (3 to 6 meters) below the ground surface—the last place the Department wants a construction joint.

Safety First

Before drilling begins, the work area must be blue staked. In addition to searching for underground utility conflicts, the Contractor and the Resident Engineer need to look for any overhead conflicts. Plenty of head room is needed when constructing deep-drilled shafts. It is not so much the drill rig that needs the room but the crane for lifting the rebar cage and tremie. Some rebar cages can be up to 100 feet (30 meters) in length. Sometimes it is possible to get the power lines de-energized temporarily while the drilled shafts are being installed. The power company will place markers on the power line to help in judging clearance distances.

When drilling next to an underground utility, it is advisable for the Contractor to pothole first and exactly locate the utility. During drilling, caving may expose the utility. If this occurs, the Inspector should verify that the utility is well supported, if needed, and that the Contractor does not entomb it in concrete when the shaft is poured.

With sandy and SGC (sand-gravel-cobble) type soils, there is the danger of the soil collapsing near the surface as the driller advances the hole. The Resident Engineer should examine the stability of the surface soils. If the Resident Engineer believes the surface soil is too unstable to work on, he or she has the authority under 105.02 to suspend the work until the Contractor makes the area around the hole safe. Usually a safety casing can be placed around the hole in order to protect workers. Keep in mind, Subpart P of OSHA does apply to any drilled shaft excavation.

The most obvious hazard with drilled shafts is the open hole. Fall protection needs to be provided as required by Subparagraphs 1926.501(b)(7)(ii) and 1926.651(l)(2) of OSHA. Common practice is to keep unattended holes covered with plywood, steel plates, or some other protective covering. Chain link fence is to be placed around any unattended holes in accordance with Subsection 107.08.

Embankments

Other reasons for having embankments built first are identical to the ones that apply to driven piles (see Subsection 603-3.04 of this manual). There is the down-drag effect caused by material placed immediately around the shaft and there is the surcharge effect caused by material placed above and beside the shaft. On bridge structures the embankment must be built to the top of berm elevation before any shafts are placed. (See Standard Drawing B-19.40)

No boulders or debris should be placed in embankments that contain drilled shafts (see Subsection 203-10.03[A]).

Drilling the Hole

Excavated materials removed from drilled shafts, when suitable, are intended to be used in fills and embankments within the project.

The references at the end of this chapter provide more information on the drilling equipment, tools, and methods used by drilling Contractors to excavate deep holes. The type of drilling method chosen by the Contractor greatly affects the cost of the shaft and the inspection requirements placed on the Department. There are only three basic drilling methods applicable to drilled shafts. The following is a brief description of each method (see the references for more details). These methods will be referred to extensively throughout the rest of this section.

The Dry Method

The dry method is by far the quickest, cheapest, and easiest method of drilled shaft construction. The hole is drilled and remains dry and stable until a rebar cage can be placed and the concrete poured. Contractors will always try to use the dry method even if there is a risk of the shaft walls collapsing.

The Casing Method

Unfortunately not all soils remain stable during drilling—some soils heave, others squeeze, and others just collapse. To overcome this undesirable soil behavior, drillers will place a temporary casing in the hole. The casing is driven into the hole and the auger either drills inside the casing or usually just ahead of it. As the hole advances, the casing is driven further into the hole until either a layer of stable soil or the tip elevation of the shaft is reached. Sometimes drilling slurry is used to keep the hole open beneath the casing until a layer of stable soil is reached. When the shaft concrete is being placed, the Contractor will pull the casing while the concrete is still fresh. The fresh concrete should fill in any voids left by the casings and unstable soils.

In some instances, the Department may allow the casing to remain permanently in place above some predetermined elevation.

The Slurry or Wet Method

This is the drilling method of last resort. Sometimes it's the only method that will work and provide a suitably constructed drilled shaft. The cost is usually double that of the dry method so expect a request for additional compensation from the Contractor if he or she has to resort unexpectedly to this method.

The slurry method relies on thick and heavy mineral slurry to keep the surrounding soils from collapsing into the hole. The entire process is slow and subject to intensive inspection. The slurry has to be cleaned and re-circulated into the hole. The slurry head elevation must be carefully maintained even as the auger is removed from the hole to prevent any sudden pressure changes in the hole. The slurry is considered a water pollutant and has to be carefully monitored and disposed of. More on drilling slurry can be found in Subsection 609-3.02 of this manual.

A variation on the slurry method is the *wet method* of drilling. With this method, the drilling takes place underwater. The water behaves like slurry and stabilizes the hole. Groundwater is usually the source of water for the hole. Although Contractors have added their own water to stabilize dry holes. Subsection 609-3.02 does not apply when water is used as drilling slurry. Some of the basic principles, like letting the sand settle out before concrete placement and not dumping the silty water into an active water course, do apply. The wet

method is often preferred over the casing method and definitely over the slurry method if it can stabilize the hole.

AASHTO designates the wet method to include both drilling slurry and water. However the drilling industry typically makes a distinction between the slurry and wet methods since the operations are significantly different.

When either the wet or slurry methods are used, the Contractor is required to provide a temporary surface casing to stabilize the ground around the hole and to prevent material from falling into the hole. This is a contract requirement specified in *the AASHTO Standard Specifications for Highway Bridges* (Div. 2, Subsection 5.4.5), which applies to drilled shaft construction for bridges.

Identifying Soils

One of the more important jobs of the Inspector is to verify that the soil profile shown in project boring logs is the same as encountered during drilling. The second page of the Drilled Shaft Inspection Form (see blank forms) is used by the Inspector for recording soils information. The soil type and depth should be recorded on the form as well as any other observations that would help identify the soil. Any groundwater or caving conditions should be reported.

If there are significant deviations in soil types, soil stratum depths, or other ground conditions encountered by the driller when compared to the project boring logs, the Resident Engineer and the Geotechnical Engineer for the project should be notified immediately. Design changes to the drilled shafts may be needed including lengthening the shafts to account for any unexpected soil or rock conditions.

Soils identification should be done for each drilled shaft. However the Resident Engineer should decide how many drilled shafts in a drilled-shaft group need complete soil profile identification.

When rock sockets are involved, the Resident Engineer should contact the Geotechnical Engineer for the project and have him or her identify the rock formation encountered during drilling. Rock identification, including when sound bedrock is reached, can be tricky and should be left to a specialist. In most cases, the Geotechnical Engineer only needs to make one or two visits to the site to train the Resident Engineer and Inspector what to look for. Afterward if anything different is encountered, then the Geotechnical Engineer must be notified again. All rock socket depths and elevations must be measured and recorded by the Inspector. See Subsection 609-4&5 of this manual for further information.

Caving Soils

Loose sands, silts, or squeezable clays surrounding the drilled shaft can cause caving in drilled shaft excavation. Infiltrating groundwater can cause the walls of a drilled shaft to collapse.

The Contractor has several alternatives when dealing with caving soils:

- Enlarge the hole to reduce the wall curvature and decrease slope angle of the caving soil (too large a hole may cause utility conflict or interfere with an adjacent drilled shaft).
- An approved one sack grout (low cement/sand mix) can be used to fill the drilled shaft in the area of the collapsing soil, after the grout has set, the Contractor drills through the grout and continues with the hole (this method requires the prior approval of the Foundation Designer except for light pole and sign foundations).
- Use the wet method of drilling.
- Use the casing method (any permanent casing must be approved by the Department).

- Use the slurry method of drilling (Subsection 609-3.02).

Inspectors must do a good job of documenting any caving conditions encountered during drilling. The depth, type of soil, and groundwater conditions must be identified. In some cases, it may be advisable to sample the soils brought up by the auger and send them to the lab for positive identification. When a drilling Contractor encounters caving soils unexpectedly and has to resort to some of the more expensive drilling methods (like the casing or slurry method) expect a request for additional costs. Good site condition identification and thorough documentation are essential in equitably resolving any caving-soil issues.

Boulders and Other Obstructions

Boulders are difficult but not impossible to remove from a drilled shaft. There are several tools available (such as grab buckets, boulder rooters, down-the-hole hammers, and hammergrabs) which can pickup, break, or remove boulders. Boulder rooters work best on the rounded, 12 to 18 inches (300 to 500 millimeter) diameter boulders usually encountered in holes in Arizona. Core barrels can be used when the boulders are prevented from shifting during drilling. More on boulder removal can be found *in Drilled Shafts: Construction Procedures and Design Methods* cited at the end of this chapter.

Boulder removal using the previously described tools is time consuming and expensive especially when there are many boulders. Usually the Contractor will widen the hole so the boulders can ride up through the auger flights. This may be acceptable as long as the widened shaft does not interfere with adjacent shafts or with underground utilities.

Most differing site condition claims for drilled shafts in Arizona involve boulders. ADOT's Geotechnical Section usually size drilled shafts to two times the expected boulder size. This means that the largest boulders cannot be easily removed through the auger flights. For these large rocks the Contractor has the option of widening the hole at their expense or using one of the specialized tools such as a grab bucket.

Intervention by the Resident Engineer

When is it appropriate for the Resident Engineer to immediately stop the drilling operations? Some guidelines are:

- the surface soils are likely to cave during drilling and no safety precautions (temporary casing or keeping workers away from the hole) have been taken;
- the soils are unlikely to cave, but there are workers around the open hole without adequate fall protection;
- soil caving becomes excessive to the point where an underground cavern is created jeopardizing any adjacent shafts as well as the safety of workers at the surface;
- the Contractor is drilling deeper than necessary;
- drilling slurry does not meet the desired chemical and physical properties;
- the shaft does not meet the specifications with regards to location, plumbness, width, depth, rebar configuration, slurry treatment, etc., and the Contractor continues working; and
- a differing site condition is encountered which the Resident Engineer needs time to evaluate.

Of course, it is impossible to list all the scenarios that might require the Resident Engineer to halt a drilling operation; however, unsafe acts and any activities that would cause irreparable harm to the integrity of the shaft are the more common reasons for a Department-caused drilling shutdown.

Plumbness

Plumbness of the shaft is usually checked after the hole has been cleaned and before the rebar cage is set. The drilling Contractor lowers a cleanout bucket or an auger to the bottom of the hole. The plumbness readings are taken on the Kelly bar with a carpenter's level or a slope inclinometer.

The Inspector can calibrate the carpenter's level to show a 1.5 percent variation by setting it vertical then moving it left and right to a predetermined distance and marking the new bubble location each time. The predetermined distance would be 1.5 percent of the length of the level. For example, a 4-foot (1.22 meter) carpenters level would be moved 3/4 inch (18 millimeters) out of plumb and the new bubble location marked. A 3/4 inch (18-millimeter) wedge can be used to place under one end of the level if it is not possible to mark the bubble tube.

On large drilled shaft projects, when more accuracy is needed, the Special Provisions may require the Contractor to check plumbness with a slope inclinometer and certify the correctness of the readings. The Inspector should verify slope inclinometer readings have been taken and are satisfactory before any rebar cages are set in the hole. It is a good practice for the Inspector to witness several of these readings to ensure correct procedures are followed.

In dry holes, the Inspector can walk around the sides of the hole and check plumbness with a plumb bob. Usually four readings are taken along the sides of the hole at right angles to each other. Plotting these measurements against the outside diameter of the hole can give a good indication which direction the hole is slanting and how plumb it is.

Location Requirements

Although 609-3.01 allows the location of the shaft to vary by as much as 3 inches (75 millimeters), this variation may be excessive when other structural elements connected to the drilled shaft, such as columns, must meet the requirements of Subsection 601-4.02(A). The Inspector should carefully review the Project Plans to see what structural elements will be cast on top of the drilled shafts. Any location or tolerance problems in the structure that could be created by mislocated shafts should be brought to the attention of the Contractor before drilling begins.

Inspection

Drilled shaft construction is a high production operation involving expensive tools and equipment. Inspection activities should be designed to minimize delays to the Contractor while ensuring the intent of the Standard Specifications is met. The best way to achieve these objectives is through cooperation with the drilling Contractor. Working together is important because many of the key inspection activities like checking hole depth, hole width, plumbness, and depth of concrete require the Contractor to interrupt production while the Inspector takes measurements.

The best way to get the Contractor to cooperate is by applying the principles of partnering described in Subsection 104.01 to the drilling operation. Here are some tips:

1. Have a preconstruction meeting (see Subsection 609-1 of this manual) and bring up the issues you think are most important to the Department (correct hole depth, verification of soil or rock conditions, correct positioning of the rebar cage, cleaning the bottom of hole, depth of tremie in concrete, safety around the hole, etc.). Solicit from the Contractor issues most important to him or her. Then work on resolving all the issues before drilling begins.

2. Let the Contractor know that some of your inspection activities will interrupt drilling and slow down production; but then work together to minimize these conflicts. Do not start any drilling with issues still unresolved. If issues can't be worked out at the project level to everyone's satisfaction, then escalate to the Resident Engineer or District Engineer.

3. Participation by the drilling Contractor in the inspection process is a must for successful drilled shaft inspection. Experienced drill rig operators and drilling foremen/forewomen can tell the Inspector a lot about subsurface conditions and the quality of the drilled hole by the behavior of the drilling tools and equipment. For example, a drill rig operator knows exactly where soils change from loose to dense by the additional engine power needed to advance the drilling tool.

Don't hide behind the Standard Specifications if you can't work out differences over inspection access—escalate to the Resident Engineer or District Engineer if necessary.

Roles of the Inspector

As an observer and record keeper, the Inspector has several roles:

- to ensure that drilled shafts are built in accordance with the Special Provisions, Projects Plans and Standard Specifications;
- to verify that actual soil and subsurface conditions are the same as those anticipated by the Foundation Designer and alert the Designer to any changes; and
- to document production methods and rates for forensic use by the Resident Engineer and Materials Group.

There is a lot of material to review by the Inspector including the Project Plans, Special Provisions, soils reports, and inspection manuals (see Subsection 609-1&3 of this manual). Inspectors should go to any preconstruction meeting so they can fully understand the issues raised between the drilling Contractor and the Department. The success any Inspector has in filling these roles depends to a large extent on the preparation time allowed by the Resident Engineer.

Inspectors also need time to get all the inspection equipment together (such as weighted tapes, plumb bobs, levels, inspection forms) and familiarize themselves with how to use each one for drilled shaft inspection. Inspectors may need to brush up on their soil identification skills.

Another aspect of the preparation is opening the lines of communication with the Foundation Designer and the Project Geotechnical Engineer. Protocols need to be developed when the Inspector finds soil conditions different than expected by the Designer or when the drilling Contractor encounters an apparent differing site condition. As mentioned previously, drilled shaft production is a high production and expensive operation. Inspectors and the Resident Engineer need to be prepared as soon as the Contractor is ready to begin and not gear up after work has commenced.

Drilled Shaft Inspection Report and the Concrete Placement Chart

The Drilled Shaft Inspection Report (see Blank Forms) should be completed by the Inspector for each drilled shaft. A blank form is shown at the end of this chapter. It is important to completely fill out the report especially in the area of soil identification and drilling difficulties encountered. For example, if the drilling Contractor has trouble advancing the hole because of boulders, this should be noted in the report. Drilling tools with worn cutting teeth or cutting edges that inhibit progress should also be noted.

The report is typically the only historical information the Department has on how the shaft was constructed. As was mentioned previously, construction methods greatly affect the load carrying capabilities of any drilled shaft. The Inspector's report ends up being a very important document in the future if integrity of the shaft ever becomes an issue. More on what observations to include in the report can be found in *the Drilled Shaft Inspector's Manual*.

In addition to completing the Drilled Shaft Inspection Report, any results from integrity testing on the shaft (gamma ray probing or cross-hole sonic logging) should be attached to the report.

When drilled shafts are placed by the slurry method or in the wet method, the significant risk of soil collapse warrants the production of a concrete placement for each shaft by the Inspector. The volume of concrete placed per yard (meter) of shaft depth is measured and plotted against the theoretical volume (6 foot [2-meter] increments can be used for harder or denser soils that are unlikely to collapse). Exhibit 609-3.03-1 is a Concrete Placement Chart developed in MS Excel that the Inspector should use.

The drilling Contractor's cooperation is needed when taking these measurements. As a result, it is suggested that the Inspector and the drilling foreperson share the responsibility of developing the placement chart.

Concrete Placement Charts are used to show if there has been any necking or enlargement of the shaft due to soil collapse. The charts are a great aid to the Resident Engineer and Geotechnical Engineer if integrity tests indicate a void in the shaft or if no integrity testing was done at all. These charts should also be attached to the Drilled Shaft Inspection Report.

Hole Cleanout

Cleaning out a hole involves removing loose material from the bottom of the shaft just before the cage is set and the shaft poured. Inspectors are responsible for approving the cleanliness of a drilled shaft before the shaft is poured. Mirrors and lights can be used to inspect the bottom of the hole. The bottom should appear flat and uniform. Soundings with a plumb bob often provide helpful information.

When the hole is full of water or slurry, hole cleanliness can be checked by repeatedly lowering a cleanout bucket and removing any accumulation of soils at the bottom of the hole. A change in the elevation at which the bailing tool hits bottom will indicate a build up of sloughed material.

A feeling device should also be used such as heavy rod or anything heavy with a blunted point to check for a firm, flat bottom. Check the center of the hole, which is usually the cleanest then check the sides of the hole. Lifting and dropping the feeling device should produce the same feel everywhere if the bottom is firm, flat and uniform. If there is any doubt, error on the side of overcleaning the hole. The Resident Engineer can always use a minor alteration for those occasions where the cleaning of the hole becomes excessive.

One other element of hole cleanliness that Inspectors should be aware of is the smearing of medium to soft clays on the walls of the excavation. If the Contractor is not careful about how these materials are removed, they can adhere to the sides of the excavation and acts as a lubricant between the shaft concrete and soils surrounding the shaft. If the Inspector suspects that the sides of the shaft have been slickened by auger trimmings then the Contractor should ream the hole until the sides are returned to their original condition.

Arizona Department of Transportation

Drilled Shaft Concrete Placement Chart (attach to Drilled Shaft Inspection Report)

Project Number: **IM-010-C(9), H4321-01C** Date: **4/1/01**
Structure Name: **Uname Bridge**
Structure Number: **1234** Inspector: **John Somebody**
Foundation Location: **WB6-9** Shaft No.: **1**

Shaft Diameter (FT): **6** Actual Shaft Depth (FT): **60**
(all linear measurements are in feet; volume measurements are in cubic yards)

Load Number	Volume Delivered	Depth of Concrete	Time of Measurement	Volume in Mixer	Cumulative Volume	Theroretical Volume	Difference in Volume
0	*0*	*60.00*	8:00 AM	0.00	*0.00*	*0.00*	*0.00*
12754	10	54.00	8:04 AM	6.25	*3.75*	*6.28*	*-2.53*
12754		51.00	8:07 AM	1.00	*9.00*	*9.42*	*2.11*
12755	10	48.00	8:12 AM	5.50	*14.50*	*12.57*	*2.36*
12755		45.00	8:21 AM	1.00	*19.00*	*15.71*	*1.36*
12756	10	39.00	8:25 AM	3.00	*27.00*	*21.99*	*1.72*
12756		36.00	8:33 AM	0.00	*30.00*	*25.13*	*-0.14*
12757	10	30.00	8:35 AM	4.00	*36.00*	*31.42*	*-0.28*
12757		27.00	8:40 AM	1.00	*39.00*	*34.56*	*-0.14*
12758	10	24.00	8:48 AM	0.00	*50.00*	*37.70*	*7.86*
12759	10	21.00	8:55 AM	5.00	*55.00*	*40.84*	*1.86*
12759		15.00	8:57 AM	0.00	*60.00*	*47.12*	*-1.28*
12760	10	6.00	9:02 AM	1.00	*69.00*	*56.55*	*-0.42*
12761	10	3.00	9:05 AM	7.00	*73.00*	*59.69*	*0.86*
12761		0.00	9:15 AM	4.00	*76.00*	*62.83*	*-0.14*
				Total Overbreak	*20.96%*		+ = bulging
(each load contained 10 cubic yards total)							- = necking

Remarks: Potential Cave-in near bottom of hole or cleanout not done very well.
Soil squeezing back or overbreak between 45 and 54 feet.
Definite bulge in shaft between 24 and 27 feet deep.
Inspectors bulge half way between his head and foot.

Instructions:

1. The Resident Engineer may need to customize this form.
2. Depth measurements should be taken at 3 foot maximum intervals when cave-in potential is high. 6 foot intervals may be used elsewhere.
3. See Section 4.5.5 of the Drilled Shaft Inspector's Manual for further information on how to complete concrete placement charts.
4. "Cumulative Volume" can be measured alternatively by counting pump strokes, but the spreadsheet formulas must be modified.
5. Spreadsheet cell *formula* are identified by *italic lettering.*
6. Spreadsheet *formula* for "Cumulative Volume" will sum "Volume Delivered". "Volume Delivered" must only be enter once per "load Number". Do not repeat by entering the same load more than once, or it will cause an error.
7. Spreadsheet *formula* for "Theroretical Volume" use the "Shaft Diameter" value and the "Actual Shaft Depth" value. Units for both values must be feet.

Exhibit 609-3.03-1 Drilled Shaft Concrete Placement Chart

Down-the-Hole Inspections

Rarely the Project Plans or Special Provisions may require the Inspector to make down-the-hole inspections of the soils or rock at the bottom of a drilled shaft. This is done usually for end-bearing type drilled shafts when underreaming is done. The goal is to positively check the firmness or solidity of the bearing stratum.

Down-the-hole inspections must comply with Subparts S of the Occupational Safety and Health Standards for the Construction Industry. Some of the safety precautions that must be undertaken include casing the hole from top to bottom, lowering the ground water table in the vicinity of the shaft, pumping fresh air into the shaft, using safety lines, and providing for an observer

609-3.04 Drilling Slurry

(A) General Requirements

Drilling with slurry is a highly complicated and inspection-intensive process. Drilling slurry should only be used as a last resort. If the Contractor has to use drilling slurry, the installation plan submitted by the Contractor should discuss in detail the methods, materials, and equipment used to drill with slurry. If slurry drilling is not included in the installation plan, then the plan must be amended in writing.

Mistakes made with drilling slurry can easily ruin a drilled shaft and seriously delay a project. The Department requires at least two full-time Inspectors on any drilled shaft operation using drilling slurry. One Inspector should inspect the drilled shaft activities that are normally monitored on any drilled shaft operation. The other Inspector should be assigned to monitoring and testing the drilling slurry.

It is highly recommended that Chapter 6 of *Drilled Shafts: Construction Procedures and Design Methods* be reviewed by both the Inspector and Resident Engineer before any drilling with slurry begins (Chapter 9 of the *California Foundation Manual* is also an excellent reference).

Drilling slurry mixtures

Drilling slurry is a mixture of water and finely dispersed clay. The clay is suspended in the water resulting in a heavier and more viscous fluid. Mineral slurries consist of water and either bentonite clay or attapulgite clay. Mineral slurries are difficult to dispose of and considered to be a pollutant.

There has been a trend in the industry to use synthetic or polymer-based drilling slurries. These types of slurry are easier to dispose of and less of an environmental hazard. These types of slurries must be pre-approved by the Geotechnical Section of Materials Group for use on ADOT projects.

How slurry works

Drilling slurry stabilizes a hole in two ways. First the heaviness of the liquid slurry exerts a positive hydrostatic pressure against the walls of the drilled shaft. This pressure keeps the surrounding soil from collapsing into the hole. The density of the slurry can be adjusted to increase or decrease the pressure as needed.

The second way drilling slurry stabilizes a hole is through the building up of a filter cake or mudcake on the walls of the shafts. The positive hydrostatic pressure forces some of the slurry particles into the surface voids of the surrounding soils. The slurry bonds to the soil forming a filter cake. The filter cake stiffens the soil through intergranular cohesion and seals the walls of the shaft. The looser soils have thicker filter cake.

Also the longer the slurry sits in the shaft the thicker the filter cake buildup.

Once the hole is stabilized with slurry, drilling can continue. Fine sand and silt will become suspended in the slurry making it thick and very viscous. Periodic de-sanding of the slurry is needed to keep it fluid.

Equipment

During drilling the slurry is circulated between the hole and a slurry tank using pumps or an air lift pipe system. The slurry tank processes the slurry by removing the finer materials not picked up by the drilling tools. This process of *de-sanding* thins out the slurry by means of centrifugal pumps, screens, or settling tanks. The treatment process lowers the density, viscosity, and sand content of the slurry. Slurry needs to be thick enough to stabilize the hole, but thin enough to be displaced by the fluid concrete when the drilled shaft is poured. The Contractor should verify that the slurry meets the specified density, viscosity, and sand content requirements before placing it back in the hole. The pH should also be checked and adjusted.

Drilling tools used with drilling slurry are not that much different than the tools used when the hole is dry. The drilling tools can be inserted and removed from the hole as long as the driller is careful to maintain a constant head of slurry in the hole and remove the tools slow enough to prevent any major caving due to suction.

Tools that do not flow smoothly through and around the drilling slurry can disturb the positive hydrostatic pressure exerted by the slurry against the shaft walls. Rapid pressure changes caused by lifting and lowering the tool can interrupt the pressure distribution. This piston effect can be so severe as to cause suction in the bottom of the hole as the tool is removed. The characteristic sucking sounds coming from the hole are a good indication to the Inspector that something (slurry, drilling tool, drilling procedure) needs to be changed in order to reduce the risk of collapsing the hole. All drilling tools used with slurry must be vented to prevent suctioning of the hole.

Handling

During drilling, slurry needs to be cleaned periodically to allow drilling tools to moved freely through the slurry without damaging the excavation. The frequency at which the slurry needs to be cleaned is determined by testing the slurry as specified in Subsection 609-3.02.

Excessive filter cake build up is one of the biggest dangers to using drilling slurries. Since skin-friction type shafts rely on the friction developed between soil and concrete, the slickness of the filter cake can severely reduce the capacity of the drilled shaft. Filter cake is not meant to be left in place during concrete placement.

Slurry left standing in a hole can set up. This hardening is temporary until the slurry is agitated again. However the effects on the drilled shaft can be very detrimental. A thick membrane of filter cake will form on the sides of the hole when the slurry is allowed to stand for up to 24 hours. This thick membrane acts as a lubricant and significantly reduces the skin friction of the shaft. The solution to this problem is either 1) don't allow the slurry to stand in the hole for more than 4 hours as required by the specifications or 2) enlarge the hole to remove the filter cake at no additional cost to the Department.

The sand and silt removed from the slurry tank must be disposed of carefully. This material contains residual slurry that is still considered a water pollutant. It should not be placed in any hole or fill within the flood plain of a river or wash. The residual slurry can be removed through washing to allow a more convenient disposal of the material. However the wash water must then be disposed of properly.

Drilling slurry is considered a water pollutant and should be either recaptured for reuse or taken to an ADOT approved liquid waste disposal facility.

(B) Slurry Inspection and Testing

The Contractor is responsible for sampling and testing the slurry under the observation of the Department. As mentioned previously, an Inspector should be assigned to monitor the drilling slurry full time. The Inspector should ensure that the Contractor is using appropriate sampling and testing procedures for the drilling slurry.

The Inspector should check:

- the sampling device to ensure it can obtain a sample of the slurry at any depth in the hole without contaminating the sample (see *Drilled Shafts: Construction Procedures and Design Methods* for equipment and methods of sampling slurry;
- the Contractor's testing procedures to ensure they conform to the prescribed test methods for the testing equipment (written test methods are usually included with the testing equipment or can be obtained from the American Petroleum Institute);
- the Contractor's testing equipment to ensure it is both appropriate for the required test method and properly calibrated; and
- the frequency at which the Contractor samples and tests to ensure the slurry does not become excessively stiff or sandy.

Sampling procedures are the most important to check. The goal of the Inspector should be to ensure that any sample of the slurry is representative of the slurry at the depth the sample was taken.

Slurry samples are tested for density (using a mud balance), viscosity (using a Marsh funnel), pH (using litmus paper), and sand content (using an API sand content kit). The specifications set upper and lower limits for density, viscosity, pH and sand content. It's the Inspectors job to ensure the Contractor's slurry stays within the range of values specified. Here's why:

<u>Density</u>

For density, a lower limit is needed to stabilize the hole and prevent it from caving. On the other hand, slurries with too high a density can become unstable with respect to their ability to suspend solids. These solids could settle out during concrete placement causing voids and other defects.

<u>Viscosity</u>

Viscosity refers to the fluidity of the slurry—the higher the viscosity, the thicker the fluid. Viscosity controls how much sand can be suspended in the slurry. When the viscosity is too low, not enough sand is suspended in the slurry to improve the slurry density and hole stability. In addition, the slurry may be too thin to form a filter cake, which also stabilizes the hole. Too much viscosity allows too much sand to be suspended, which can throw off the allowable density and sand content values of the slurry. It also makes the drilling tools more difficult to remove from the hole without damaging the sides of the excavation.

<u>pH</u>

Slurries that have a pH value outside the specified range may not fully hydrate and develop the expected viscosity. During drilling, changes in pH can cause the slurry particles to lump together (flocculate) and settle

out. No more filter cake will form to stabilize the walls of the hole and any suspended sand may begin to settle out as the viscosity decreases.

Sand Content

For sand content, an upper limit is set to prevent any sand from settling out during concrete placement. The upper limit also controls the amount of filter cake (or mud cake as it is sometimes called) that can develop from the slurry on the walls of the hole. Too much filter cake reduces the load carrying capacity of skin-friction type drilled shafts.

The Inspector should receive a copy of all test reports on drilling slurry and include them with the Drilled Shaft Inspection Report (see blank forms) for that hole.

609-3.05 Integrity Testing

The Contractor is required to assist the Department in inspecting completed drilled shaft excavations for the correct depth, plumbness, and diameter. The Inspector is free to use the drilling Contractor's labor and equipment to make these checks. The Contractor must also make the hole safe for the inspection work.

Drilled shafts that are constructed by the wet or slurry method require inspection tubes placed in them as shown in the Project Plans. When PVC tubes are used, it is recommended that the water in the tubes be changed 12 to 18 hours after completion of the concrete pour. Replacing the water with cooler water will help reduce the temperature rise in the shaft that can melt and distort the plastic tubes.

Either gamma testing or cross-hole sonic logging performs integrity testing of the shaft. Either method is to be performed by the Contractor with the Department's oversight. A brief description of each method follows including the corresponding responsibilities of the Resident Engineer and the Inspector.

Gamma Ray Testing

A radioactive probe is lowered into a dry inspection tube. Gamma ray emissions from the probe measure the density of the concrete directly adjacent to the tube. A counter records the number of radioactive particles reflected back towards the probe. The higher the count, the denser the concrete around the probe.

Counts are to be taken for at least 90 seconds at 3-foot (1-meter) intervals along each inspection tube. The spacing can be increased to 6 feet (2 meters) in areas of the shaft where the risk of soil intrusion is low (for example, inside a permanent casing). However the Inspector has the right to request testing at any specific location and at any specific interval within the shaft where defects are suspected.

The counts for each tube are analyzed to determine the mean and the sample standard deviation (see Exhibit 609-3.05-1). Counts below the mean by more than three standard deviations are a good indication of a soil intrusion or poorly consolidated concrete around the inspection tube. When counts this low occur or when wide variations in standard deviations occur in adjacent tubes, the Resident Engineer should send the results to ADOT Geotechnical Section for further analysis.

The key to having meaningful results with the gamma ray probe is to take the measurements consistently. The 2.5 inch (65-millimeter) PVC tubes will provide the widest variations in reading especially if the tubes are warped due to the hydration heat from the concrete. Consistency is improved when:

- the concrete has had a chance to gain strength and cool to a uniform temperature (wait at least 3 days after the pour if possible);
- the tubes are straight, with no bend and no tight fits;
- the probe is positioned consistently in the tube (always in the center if possible);
- the readings in each shaft are all taken during the same day with the same standard count for the probe; and
- 2 inch (50-millimeter) black steel pipe is used for tubing instead of PVC.

Cross-Hole Sonic Logging (CSL)

Unlike gamma ray testing, which measures the density of the concrete within 2 to 4 inches (50 to 100 millimeters) of the inspection tube, cross-hole sonic logging measures the density of concrete between inspection tubes. Ultrasonic pulses are emitted from a probe and measured by a receiver in an adjacent tube. Sound travels faster in denser material and sound waves lose energy as they pass through softer or less dense material. These two characteristics are used to measure the integrity concrete between each pair of tubes. Not only can the concrete between adjacent tubes be probed, but the concrete in the interior can be evaluated by placing the receiver probe in a tube diametrically opposite from the source probe.

GAMMA RAY TEST RESULTS

PROJECT: **IM-010-C(9), H4321-01C** DRILLED SHAFT: **WB6-9** APPROVED BY: **John Somebody** DATE: **4/1/01**

DEPTH	TUBE 1		TUBE 2		TUBE 3		TUBE 4		TUBE 5		TUBE 6		TUBE 7		TUBE 8	
(feet)	WD	%V	WD	%V	WD	%V	WD	%V	WD	%V	WD	%V	WD	%V	WD	%V
3.0	126.26	17.91	125.18	16.82												
6.0	124.13	17.52	123.42	19.36												
12.0	123.88	17.79	125.66	17.51												
18.0	126.48	18.32	125.38	17.32												
24.0	125.61	19.37	123.75	18.09												
27.0	124.17	17.45	127.19	18.67												
30.0	124.02	17.73	130.54	16.82												
33.0	123.82	18.26	122.04	18.37												
36.0	125.66	17.55	124.83	17.45												
39.0	132.77	17.09	120.64	17.38												
42.0	123.14	19.21	120.81	18.63												
45.0	126.13	16.96	123.22	16.21												
48.0	128.51	17.53	120.4	18.57												
51.0	127.44	17.81	123.28	18.7												
54.0	124.66	18.62	125.49	17.57												
57.0	129.15	17.52	129.93	17.66												
60.0	127.63	16.84	125.66	18.27												
63.0	128.55	16.33	127.83	18.13												
66.0	125.17	17.14	127.75	18.19												
69.0	129.4	18.85	128.08	18.6												
72.0	129.58	18.09	129.96	17.45												
75.0	128.88	17.14	129.55	16.16												
78.0	127.65	18.85	130.23	16.55												
81.0	129.12	18.09	134.14	17.23												
Mean	126.74	17.83	126.04	17.74												
Std. Dev.	2.44	0.77	3.57	0.85												
3xStd.Dev.	7.31	2.30	10.71	2.55												

Exhibit 609-3.05-1 Gamma Ray Test Results

Logging should be conducted at intervals of no less than 4 inches (100 millimeters) along each tube. Testing should be done with the source and emitter in adjacent tubes and at the same elevation. However the Inspector has the right to request testing at any specific location, at any specific interval, and using any source/receiver arrangement within the shaft where defects are suspected.

Steel tubing is preferred over PVC tubing for cross-hole sonic logging, but is not mandatory. PVC tubes can debond from the surrounding concrete rendering the test useless in that part of the shaft. Where this occurs, the Contractor will have to provide other means for testing the integrity of that portion of the shaft.

The results of cross-hole sonic logging are difficult to analyze and are beyond the scope of this manual. Test results from cross-hole sonic logging should be sent to the Geotechnical Section for analyses. Geotechnical Section can also provide field guidance to the Resident Engineer and Inspector as to what good test results should look like and when suspect results should be forwarded for review.

609-3.06 Reinforcing Steel

Section 605 of this manual provides additional information on inspecting reinforcing steel that is applicable to this Subsection.

Rebar Cages

The Project Plans will show the reinforcing steel details for each group of drilled shafts. Shop drawings for the rebar cages should be produced in accordance with Subsection 605-3.01 and sent to the Inspector for review. The Inspector should compare the shop drawings and any bar lists with the Project Plans. Any changes in how bars are spliced or how longitudinal bars are terminated at the top or bottom of the cage should be brought to the attention of the Resident Engineer and the Structural Designer. Hooks on spiral or hoop bars should be checked to ensure a tremie or pump tube can move freely through the center of the rebar cage without getting caught on any protruding steel.

The shop drawings should be approved by the Resident Engineer before any rebar cages are fabricated. Fabrication is usually done at the project site close to the holes. The cages are built on the ground giving the Inspector ample opportunity to observe the fabrication process. Rebar cages need to be checked for:

- bar sizes and grades;
- proper bar spacing and bar lengths;
- adequate bar clearances;
- proper lap lengths for hoops, spirals, and straight bars; overall length and width;
- stiffness and stability for lifting; and
- proper placement and securing of inspection tubes (when used).

For safety or constructability reasons, the Contractor may want to substitute welded splices or mechanical couplers for the lap splices shown in the Project Plans. These substitutions are permissible as long as they conform to Subsection 605-3.02. Any substitution should be at no cost to the Department. See Subsection 605-3.02 of this manual for a further discussion.

When mechanical splices are used, the Inspector must use the manufacturer's instructions as a guide to inspecting the splicing operation.

When the cages are lifted, it is important for the Inspector to look for any twisting or distortions that may have bent bars. High stress concentrations can develop in a drilled shaft when distorted cages are used. The Inspector should closely examine the rebar cage as it is lowered into the hole. If the Inspector notices significant bending or distortion of the bars that affects bar straightness, spiral pitch, bar spacing, or cage shape and diameter, the cage should be lifted from the hole and the bent bars replaced.

Drilled shafts can usually be deepened by up to 3 feet (1 meter) without having to extend the rebar cage (check the Project Plans).

Centering Devices

To construct a long lasting and durable drilled shaft, the rebar cage must be completely surrounded by an adequate cover of concrete (3 inches [75 millimeters] is usually the minimum). Centering devices are used to keep the rebar cage properly aligned in the hole until the concrete is placed. Concrete rings and plastic wheels that clip on to the spiral or hoop reinforcing are the best type of centering device. As long as they can turn freely as the cage is lowered into the hole, they will minimize the amount of loose material that falls into the hole if the cage hits the side of the excavation. The wheels should have a maximum horizontal spacing of 90 degrees with the maximum vertical spacing between 10 to 15 feet (3 to 5 meters) depending on the stiffness of the rebar cage.

The steel hair-clip type of centering device is also acceptable as long as the steel is epoxy coated in accordance with Subsection 1003-5 and placed in accordance with Subsection 605-3.03. The epoxy coating is needed to prevent the establishment of a corrosion channel from the surrounding soil to the rebar cage. Certificates of Compliance for the epoxy coating are required.

Dobie blocks are not acceptable as centering devices except for shallow sign and light foundations. When they come in contact with the sides of the excavation, the blocks often move out of position while knocking too much loose material into the excavation.

Cage Stiffeners

Rebar cages are built horizontally on the ground then lifted vertically for lowering into the hole. The cages themselves are long, slender, and flimsy. The process of lifting a cage to a vertical position can severely distort and bend portions of the rebar cage. To prevent this, Contractors will place temporary stiffeners inside the rebar cage. Sometimes they are tied to the outside of the cage. Regardless of where they are placed, stiffeners shall be removed as the cage is lowered into the hole. Stiffeners can interfere with concrete placement especially when the concrete is allowed to free fall. Outside stiffeners can provide a corrosion channel from the ground to the rebar cage.

No tack welding of stiffeners to the rebar cage should be done unless the rebar cage is made of weldable reinforcing steel (ASTM A706 type).

609-3.07 Concrete Placement

(A) General

In Subsection 609-2.01 of this manual, it was stressed that drilled shaft concrete needs to be fluid. The more fluid the concrete, without risking segregation and strength loss, the better. Fluid concrete in the drilled shafts has the advantages of:

- completely coating reinforcing steel without the need for vibration;
- being able to fill any surface voids along the walls of the excavation; and
- exerting an enormous hydrostatic pressure against the walls of the excavation.

With some shafts as deep as 130 feet (40 meters), it is extremely difficult to get a concrete vibrator deep enough to sufficiently vibrate the concrete around the rebar cage. Fluid concrete eliminates this problem.

For skin-friction type drilled shafts, an irregular surface between the walls of the excavation and the concrete is highly desirable. Fluid concrete will fill in any voids along the walls of the excavation no matter how irregular. The resulting irregular surface will enhance the skin friction abilities of the shaft.

Perhaps the most important advantage of highly fluid concrete is the hydrostatic pressure it exerts against the walls of the excavation. There are no upper limits placed on the rate of concrete placement for drilled shafts (the minimum is 40 feet [12 meters] per hour). In fact, the Contractor should be encouraged to pour the shaft as quickly as possible. The resulting hydrostatic pressure does several things.

First it pushes the concrete against the walls of the excavation. Not only does this help fill any surface voids, but it also compacts the surface materials. In other words, the drilled shaft concrete is pressure fitted against the sides of the excavation.

Second the hydrostatic pressure removes any loosely held material along the walls of the excavation above the concrete surface. There is a squeezing action going on as the concrete rises. The fluid and dense concrete loosens any lighter material held above. The material falls on top of the concrete and floats there until the pour is completed. This is an important phenomenon that should not be ignored by the Inspector. When drilling slurry is used, a filter cake is formed on the walls of the excavation. This cake is muddy and slippery. The fluid concrete removes this coating of filter cake eliminating any unexpected loss in skin friction due to the drilling slurry. The pressure also prevents any of the drilling slurry from mixing in with the fresh concrete.

Thus a very fluid concrete that doesn't segregate and has a long setting time is ideal for drilled shafts. Inspectors can ensure fluidity is maintained by taking many slump tests and regularly checking mixing time on the concrete tickets. When carefully controlled, adding water or a plasticizer to improve the slump is an acceptable field practice for drilled shafts.

(B) Placement in Dry Excavations

Having a clean hole is most important. The Inspector must approve the cleanliness of the hole before any steel is placed or concrete poured. During concreting, the shaft needs to be inspected at frequent intervals to be sure that there is no caving of the walls and significant contamination of the concrete.

The best time to pour a drilled shaft is immediately after the hole is cleaned and accepted by the Inspector. The rebar cage should be promptly set and the concrete poured immediately after that. This rapid sequence of events minimizes the chances of debris falling into the hole and contaminating the shaft.

In a dry hole the concrete can be placed by a concrete pump or using the chutes from the mixer trucks. There is no limit on the amount of free fall as long as the concrete does not hit anything (like the rebar cage) on the way down or scour the bottom or sides of the shaft. Any cage stiffeners or supports should be removed before pouring.

As the concrete rises to the top of the hole, loose materials such as sand, silt, and filter cake will ride on the surface. This material mixes with the top meter of concrete. The pour needs to be continued and the excess concrete spilled until the Inspector observes fresh concrete that is relatively uncontaminated. There is no additional compensation to the Contractor when extra concrete has to be added to the hole in order to expel contaminated concrete already placed.

Regardless of how fluid the concrete looks, the top 10 feet (3 meters) of concrete poured in a dry hole and the top 5 feet (1.5 meters) poured in a wet hole needs to be vibrated, but only after all water, slurry, and contaminated material has been removed. These areas are the most likely to have voids around the steel since they do not benefit from any hydrostatic pressure exerted from concrete above.

(C) Placement under Slurry or Water

When concrete is placed in water or slurry, the concrete needs to be placed the same day as the excavation is completed. This reduces the risk of a major soil collapse if the hole is left open too long.

When placing concrete in the water- or slurry-filled shaft, a tremie is used to deliver the concrete to the bottom of the shaft. The tremie cannot be made of aluminum since aluminum reacts adversely with fresh concrete.

The purpose of the tremie is to keep the fluid concrete from mixing with the water or slurry in the hole and to deliver the concrete to the bottom of the shaft in an uncontaminated state. A valve, sealable cap, or plug is placed in the tremie tube to prevent water or slurry from entering.

The keys to successful concrete placement with a tremie include:

- The initial placement of the tremie at the bottom of the tube should be in the range of 2 to 12 inches (50 to 300 millimeters) from the bottom of the hole.
- There should be a quick, uninterrupted, initial flow of concrete that buries the tip of the tremie in at least 5 feet (1.5 meters) of fresh concrete.
- There should always be a head of concrete in the tremie tube itself of at least 4 feet (1.2 meters) higher than the surface of the slurry or water.
- The concrete must have a slump of at least 8 inches (200 millimeters) with no segregation and no cement balls.
- Lifting the tremie as the concrete rises prevents segregation, but be especially careful to monitor the depth of the concrete versus the depth of the tremie so that there is never any chance that the end of the tremie will pull out of the fresh concrete.

Strict adherence to these practices will prevent the concrete from mixing with the water or slurry in the hole—the primary objective of pouring with a tremie.

If everything works properly, the concrete cleans the slurry off the reinforcing as it rises up the shaft. The top layer of concrete catches any slough or filter cake from the sides of the shaft. The pumping continues after the concrete reaches the top of the shaft until all the contaminated concrete has been ejected.

When pumping off the ejected slurry, especially when the top of the shaft has been widened appreciably, care must be taken to not allow the water to flow fast enough to wash cement and fines from the concrete.

609-3.08 Casing Removal

Temporary Casing

Temporary casing functions as a means for keeping a hole opened while it is excavated and filled with concrete. It can also be used as a means for stabilizing ground around the excavation to reduce the amount of overbreak (extra concrete) or as a safety barrier for people working in and around the excavation. Temporary casing is usually made of smooth rolled steel plates.

Permanent casing reduces the skin friction developed between the shaft and the surrounding soil to zero. This is why temporary casing needs to be removed and any casing left by the Contractor needs the prior approval of the Foundation Designer. If there is a loss in drilled shaft capacity due to casing left in the hole, the Contractor is responsible for placing additional drilled shafts and altering the substructure as necessary to meet the load carrying requirements of the foundation.

Drilling Contractors and the Department do not like to leave temporary casings in a completed drilled shaft. Drilling Contractors have to buy a replacement casing and the Department then has to determine whether the temporary casing reduces skin friction around the shaft sufficiently enough to warrant remedial actions.

In order to encourage a win-win outcome with temporary casing, Inspectors should examine temporary casing for any characteristics that would cause them to get stuck in the hole. This could include accumulations of mud or dried concrete, imperfections on the casing surface, too much rust, or anything that detracts from the smooth, clean appearance that a temporary casing should have.

Sometimes temporary casing is telescoped. This means a large surface casing is above a smaller subsurface casing which may be above a deeper and smaller temporary casing. There is usually overlap between these casings, sometimes to 6 feet (2 meters) in length. The material in the overlap between the casings is usually loose soil or slurry. When the shaft concrete is poured, the smaller casing needs to get pulled before the concrete reaches the top of that casing. If this is not done, concrete will spill over and fall into the gap between the smaller and larger casing. The concrete then mixes with the loose soil or slurry between the two casings, forming a permanent zone of weakness in the shaft. This can render the shaft defective.

Casing Removal

When removing casing during a concrete pour, the Inspector needs to keep four points in mind:

1. There must be at least 5 feet (1.5 meters) of concrete head in the tremie pipe above the surface of the concrete as the casing is being removed (except near the top of the shaft).

2. The concrete surface must always be at least 5 feet (1.5 meters) above the bottom of the casing as the casing is being removed.

3. The slump of the concrete must be at least 4 inches (100 millimeters).

4. The casing should be slowly removed from the hole to prevent an upward movement of the concrete and the rebar cage.

The first two points ensure that there is at least 10 feet (3 meters) of concrete head pressure at the bottom of the casing. Head pressure is needed to keep soil, water, or slurry from mixing with the concrete that discharge from the bottom of the casing as the casing is pulled.

When deep casing is used (30 feet [10 meters] or more), the hydrostatic pressure exerted by water or slurry in the excavation can be substantial. The 10 feet (3 meters) of concrete head required by the Standard Specifications may be insufficient to offset the pressure exerted by the water or slurry. The minimum head requirements as the casing is pulled should be increased by the Resident Engineer based on the following formula:

Minimum Total Concrete Head (feet) =

$$\frac{4 \text{ x total slurry or water head outside of casing (feet) x density of water or slurry (lb/cf)}}{\text{Density of concrete (lb/cf)}}$$

or,

Minimum Total Concrete Head (meters) =

$$\frac{1.2 \text{ x total slurry or water head outside of casing (m) x density of water or slurry (kg/m}^3\text{)}}{\text{Density of concrete (kg/m}^3\text{)}}$$

The concrete head and water or slurry head are both measured from the bottom of the casing.

Slump is another important concrete property that must be closely monitored when a casing is pulled. If the Contractor waits too long to pull the casing and the concrete begins to lose slump, three things can happen:

1. the concrete sets up enough such that the casing cannot be removed;

2. the concrete sets and comes up with the casing (usually lifting and twisting the rebar cage out of position); or

3. the concrete cannot expand sufficiently enough to fill the voids and exert a positive pressure against the walls of the excavation.

Any one of these is potentially devastating to the integrity of the drilled shaft. Inspectors must keep a close eye on slump and set time for the concrete that is already down in the hole. The Contractor can use super-plasticizers and retarders when the concrete is batched to provide more flexibility on when the casing needs to be removed.

Even when there is sufficient concrete head in the casing and the slump is okay, the Contractor must still be careful in how the casing is removed. Problems with casing removal have produced the largest number and worst type of drilled shaft defects. The Inspector should closely monitor casing removal for any upward movement or racking of the rebar cage. A level with a target placed on the cage can be used to measure movement. However this can only be done before and after removal of the casing.

Monitoring rebar cage movement during actual casing removal is extremely difficult. The Inspector can monitor the position of the crane jib holding the cage for some signs of cage movement. However the best thing for the Inspector to do is ensure that good casing removal techniques (slow withdrawal, vibration assistance, casing tapping, etc.) are used. Casing removal is a topic that must be thoroughly discussed at any drilled shaft preconstruction meeting and should be included in the Contractor's installation plan.

609-4 & 5 Method of Measurement & Basis of Payment

Drilled shafts are not usually part of a lump sum structure, but paid separately on a linear meter basis for the actual length placed. Drilled shafts may be extended up to 3 feet (1 meter) without having to lengthen the rebar cage.

When drilled shafts are shortened and the Contractor has to cut the rebar cage, the Department will purchase the wasted rebar from the Contractor under the provisions of Subsection 109.04. Labor and equipment used for assembling that portion of the wasted rebar cage can also be included. The rebar becomes the property of the Department and should be disposed of in accordance with Subsection 603-3.04 of this manual.

Rock Sockets

Subsection 609-3.01 of this manual (under Soil Identification) establishes the procedure for determining when bedrock has been reached for rock socket purposes. The following attempts to more narrowly define the top of rock socket elevation for payment purposes.

Rock sockets, when specified and paid for separately, are measured from the top of bedrock elevation to the bottom of the shaft. The question that invariably arises on each project is, "Where exactly does the bedrock begin?" When highly fissured or decomposed rock many meters deep lies on top of bedrock, the boundary can become obscured.

In Subsection 609-6.01 of this manual, the Geotechnical Engineer for the project makes the initial determination in the field when suitable bedrock is reached. The Resident Engineer or the Inspector then makes subsequent determinations and contacts the Geotechnical Engineer only when there are bedrock identification problems. For payment purposes, the Department considers the top of the rock socket to be the elevation at which suitable bedrock is reached. This means regardless of the difficulty the drilling Contractor has in reaching suitable bedrock, the separate measurement for rock sockets does not begin until a suitable rock has been reached.

Here is a procedure the Inspectors should use for determining the elevation at which the rock socket begins:

1. As the Contractor advances the hole, fractured and decomposed rock will begin showing up on the auger flights. When the auger trimmings contain predominantly rock fractured by the auger (80% or more), then this is a good indication that the top of the rock socket has been reached. If the rock is hard, a rock auger may be needed to fracture the rock. Rock fractured by drilling tools will have sharp edges and fractured faces that look fresh. Decomposed rock will have rounded edges with dull fractured faces. The Inspector should observe a corresponding increase in both engine noise and amount of down pressure (crowd) applied to auger.

2. When the Inspector is convinced based on the auger trimmings that the rock formation is suitable to begin the rock socket, the Inspector should measure and record the depth of the hole. The Inspector can adjust the elevation upward if the auger has clearly penetrated into suitable rock before the depth measurement is made.

3. From this point on, drilling begins for payment under the rock socket item. The Inspector should measure and record the bottom of rock socket elevation, then check the rock socket length to ensure it meets the minimum shown on the Project Plans.

610 PAINTING

Structures are painted to improve their visual appearance. Paint that chips and peals in a year or two detracts from the visual appearance of a structure. Of course, this defeats the purpose of painting in the first place. The intent of this section is to give the Inspector the basic knowledge of what constitutes a good, long-lasting paint job.

Painting Concrete

Concrete paint is a surface treatment. Water-based acrylic paints are used to color a concrete surface. Concrete stain, on the other hand, penetrates into the surface of the concrete. Concrete stains cannot be used in Arizona because of the solvent emissions that occur when the stain dries. However, from a maintenance standpoint, stains are preferable over paint because they are less likely to peel and chip after prolonged exposure.

Inspectors can ensure a good paint job by adhering to a few fundamental practices of painting:

- use good paint (ADOT specifies high quality paint); Inspectors should ensure through sampling and proper paperwork that materials used meet or exceed the Standard Specifications;
- focus on surface preparation (paint adhesion is as much a function of how well the surface is prepared as the quality of the paint); careful inspection of the prepared surface is important;
- follow the manufacturer's recommendations closely (this includes humidity, temperature, and wind requirements); and
- apply in thin, even coats (two thin coats are better than one thick coat).

Application

The contractor must develop an Application Plan for painting concrete surfaces in according with the manufacturer's written recommendations. The Plan must include:

- Rate of application
- Number of necessary coats (2 minimum)
- Ambient air temperature
- Application equipment
- Qualification of workers
- Safety and damage protection
- Proposed surface preparation

The Contractor and Resident Engineer or Inspector should discuss which concrete surfaces require paint. Several factors such as type of bridge, posted speed, view from vehicular and pedestrian traffic must be considered. Project Plans may have specific requirements in addition to the general requirements contained in Subsection 610-3.05(B) of the Standard Specifications.

Materials

One thing the Resident Engineer or the Inspector needs to do before the paint is ordered is to ensure the Contractor knows the right color type. Sometimes the Special Provision give the Contractor a color option or leave the color type unspecified. Either way, an agreement between the Department and the Contractor should be reached on the color type before the paint is ordered.

Paint for concrete must be pre-approved by ADOT Materials Group before use. ADOT's Approved Products List contains all pre-approved paint and stains. Pre-approved paints still need to be sampled and tested before application. This is best done when the preliminary or final sample test sections are coated. The Inspector samples the paint at the project site and sends a sample to Materials Group (Structural Materials Testing Section) for testing.

The Inspector should carefully note the lot number on the sample ticket to ensure it is the same as:

- on the sample container drum
- on the Certificate of Compliance, and
- on any paint containers shipped to the project site in the future.

Any paint that arrives on the project that does not have the same lot number as paint previously sampled and tested should be sampled and sent to Materials Group.

Surface Preparation

The greatest impact the Inspector can have on getting a good paint job is the attention paid to surface preparation. The Department requires all painted concrete surfaces to be sandblasted first. The cleaned surface should have a roughened textured appearance consistent with the surrounding concrete surface. Any additional preparation of the surface (washing or rinsing) in accordance with the manufacturer's recommendations then follows. Concrete surfaces must be thoroughly dry and free of dust at the time paint is applied. The Inspector must have a copy of the recommendations and Application Plan during the preparation process.

The Inspector should recognize what constitutes good surface preparation. Consult with the paint manufacturer's representative if you are unsure of what an acceptably prepared surface should look like.

Protection

Before painting begins, talk to the painting Subcontractor about the safety precautions that need to be taken around the paint. Material safety data sheets (MSDS) should be available to you and the painters at the project site. Personal protective equipment such as goggles and face shields may be needed for some paints. Stains that contain solvents need to be used in a well-ventilated area (see the MSDS).

Also discuss with the Contractor how adjacent areas will be protected from paint spray and splashes. When painting near traffic, a means of protecting passing vehicles from airborne paint will be required.

Test Panels

The Contractor must provide a preliminary test panel of concrete with the paint already applied. This sample can be part of the actual surface to be painted as long as any unacceptable paint can be easily removed without marring or disfiguring the surface.

Once the preliminary test panels have been approved, a final test panel on the actual surface should be done. Be careful where you locate the test panels. Use an area that is the least visible to the public. That way if the surface appearance cannot be properly restored, any uncorrectable mistakes won't be as noticeable.

The Resident Engineer is free to streamline this process if the painting Subcontractor has recent experience (last 6 months) using the identical paint on another ADOT project. For example, the Resident Engineer could omit the preliminary test panel and go right to the final test panel.

The Resident Engineer and any other project stakeholder concerned about the color should inspect test panels. This would include any local officials, Bridge Designers, or landscape architects associated with the project

Sampling and Testing

Paint must be sampled in accordance with the Sampling Guide. At least one peeling and flaking test must be done per project.

The product must be approved before it is applied to any permanent surface.

Peeling and flaking testing must be done on all test panels after any required observation period. The Structures Materials Testing Section of Materials Group has the proper equipment to perform peeling and flaking testing. The field offices can either borrow the equipment or have a technician from Materials Group perform the test.

Painting Steel

Painting of structural steel serves two purposes. The primary function of paint application is to prolong the life of the metal by means of a continuous film or coating which will mechanically seal the surface against corrosion. The secondary function is to produce and maintain a pleasing appearance.

Material

The materials used in painting must conform to Specification 1002 and either be listed on ADOT's Approved Products List or pre-approved by Materials Group. Manufacturer's certificates of analysis shall be furnished as required by the Standard Specifications and samples shall be taken in accordance with the Special Provisions or the Sampling Guide Schedule.

Inspection

Steel is normally cleaned of all dirt, grease, rust, and mill scale by profile blasting in the fabricator's shop. Then a coat of primer paint is promptly applied. The primer will serve as a rust inhibitor but is easily scarred during handling, transporting, and erecting the steel. After the steel has been erected, the areas where the prime coat has been damaged or is otherwise defective should be cleaned and given another coat of primer.

After all the necessary spot priming has been done and the primer has dried, the intermediate (first) field coat of paint may be applied. Before painting in the field, the surfaces must be dry. Morning dew and high humidity conditions are to be avoided when painting. Wind will not only result in dirt and other undesirable material being blown onto fresh paint but coverage may be uneven or paint may be blown onto surfaces that are not intended to be painted.

Care should be exercised by the painters in order for paint to not be accidentally applied or blown onto passing vehicles or parts of the structure not to be painted. It may be necessary to apply paint by brush on some areas of the steel.

It is not possible to get a good durable paint film that will protect and preserve the metal and also provide an attractive structure unless a thorough job of cleaning and preparation has been done. Imperfections, such as runs or sags in the shop coat, cannot be covered up with the field coats so it is imperative that the Inspector insist on proper cleaning and correction of defects prior to the application of the first field coat.

In applying paint with a spray gun, the gun should be held perpendicular to the surface and the trigger released at the end of each stroke. All runs or sags should be brushed out immediately.

The Standard Specifications require each coat, including the shop primer coat, intermediate (first) field coat, and top (second) field coat to have a minimum thickness of 2.0 mils (50 micrometers). The Inspector should check areas such as the edges of beams, bolt heads, and the like for compliance with this specification, as these are the areas where the paint film is likely to be thinnest. These checks should be documented.

An instrument for measuring paint thickness (micrometer) may be obtained from the Materials Group's, Structural Materials Testing Section. SSPC has developed a specification (SSPC-PA 2) that ADOT uses for measuring paint thickness with a micrometer. A copy of this specification is available from Materials Group.

Some inspection points for painting steel include:

1. Are the necessary personal protective equipment and safety devices available and being properly used?

2. If paint had not received prior approval, have samples been obtained by the project personnel, submitted to Materials Group, and approved by Materials Group prior to use?

3. Has the paint been formulated and mixed in accordance with Section 1002 and the manufacturer's recommendations?

4. Has the surface to be painted been thoroughly cleaned of rust, loose mill scale, dirt, oil, or grease and all foreign substances?

5. Is the metal dry and free of frost; are atmospheric conditions satisfactory?

6. Is the temperature above 40° F (4° C) at time of application?

7. Are proper precautions taken to protect both vehicular and pedestrian traffic from spotting?

8. Is paint being applied in a smooth and uniform manner so that no excess paint will collect at any point? After paint is applied, are there "runs" or "thin" areas? If runs occur, are they sanded out and the area repainted?

9. Has the paint thickness been checked with a micrometer?

REFERENCES AND ADDITIONAL INFORMATION

Section 601

**Workbook for Incidental Concrete Structures Inspection*, Course No. 202, Arizona Department of Transportation, Phoenix, AZ

Bridge Design and Detailing Manual, Bridge Group, Arizona Department of Transportation, Phoenix, AZ

Concrete Construction Handbook,, Joseph J. Waddell & Joseph A. Dobrowolski, McGraw-Hill, New York, NY (Available through ACI)

Formwork for Concrete, SP-4, American Concrete Institute, Detroit, MI

Construction Handbook for Bridge Temporary Works, American Association of State Highway and Transportation Officials (AASHTO), Washington, DC

Standard Practice for Concrete Highway Bridge Deck Construction, ACI 345-82, American Concrete Institute, Detroit, MI

Falsework Manual, Office of Structures Construction, California Department of Transportation, Sacramento, CA (available at the ADOT Library)

Concrete Box Girder Bridges, ACI Monograph No. 10, Oris H. Degenkolb, American Concrete Institute, Detroit, MI

Concrete Finish Reference Manual, Arizona Department of Transportation, Phoenix, AZ

Section 602

**Workbook for Major Concrete Structures Inspection*, Course No. 204, Arizona Department of Transportation, Phoenix, AZ

Post-Tensioning Manual, 5th Ed, Post-Tensioning Institute, Phoenix, AZ
Fundamentals of Prestressed Concrete Design

Prestress Manual, Office of Structures Construction, California Department of Transportation, Sacramento, CA (available at the ADOT Library)

Fundamentals of Prestressed Concrete Design, Prestressed Concrete Institute, Chicago, IL

* - individual copies recommended for inspection staff

Section 603

**Workbook for Major Concrete Structures Inspection*, Course No. 204, Arizona Department of Transportation, Phoenix, AZ
Manual on Design and Construction of Driven Pile Foundations, FHWA-DP-66-1, Federal Highway Administration, Washington, DC (available at the Construction Group Library)
The Performance of Pile Driving Systems: Inspection Manual, FHWA/RD-86/160, Federal Highway Administration, Washington, DC (available at the Construction Group Library)

Foundation Manual, Office of Structures Construction, California Department of Transportation, Sacramento, CA (available at the Construction Group Library)

Section 604

**Workbook for Major Concrete Structures Inspection*, Course No. 204, Arizona Department of Transportation, Phoenix, AZ

Manual of Steel Construction (ASD), American Institute of Steel Construction, Chicago, IL *Structural Steel Shop Inspector Training Guide*, American Institute of Steel Construction, Chicago, IL

1996 Standard Specifications for Highway Bridges, Division II, Section 11, American Association of State Highway and Transportation Officials, Washington, DC

ANSI/AASHTO/AWS Bridge Welding Code, American Association of State Highway and Transportation Officials, Washington, DC

High-Strength Bolts for Bridges, FHWA-SA-91-031, Federal Highway Administration, Washington, DC

* - individual copies recommended for inspection staff

Section 605

**Workbook for Major Concrete Structures Inspection*, Course No. 204, Arizona Department of Transportation, Phoenix, AZ

**Workbook for Field Sampling and Testing for Concrete Construction*, Course No. 201, Arizona Department of Transportation, Phoenix, AZ

**Placing Reinforcing Bars*, Concrete Reinforcing Steel Institute, Schaumburg, IL Note: The Concrete Reinforcing Steel Institute has other excellent publications on steel reinforcement.

Manual of Standard Practice, Concrete Reinforcing Steel Institute, Schaumburg, IL

Field Handling Techniques for Epoxy-Coated Rebar at the Job Site, Concrete Reinforcing Steel Institute, Schaumburg, IL

Section 609

**Drilled Shaft Inspector's Manual*, the International Association of Foundation Drilling (ADSC), Dallas, TX

**Workbook for Major Concrete Structures Inspection*, Course No. 204, Arizona Department of Transportation, Phoenix, AZ

Drilled Shafts: Construction Procedures and Design Methods, FHWA-HI-88-042, Federal Highway Administration, Washington, DC (available from ADSC)

Construction of Drilled Pier Foundations, David M. Greer and William S. Gardner, John Wiley & Sons, New York, NY

* - individual copies recommended for inspection staff