Arizona Department of Transportation
Traffic Group
2828 N. Central Avenue, Suite 900
Mail Drop 063R
Phoenix, AZ 85004

Sign Request Packet

Please find enclosed information to help you with your "Sign Request" application. This packet is intended to provide you with information on the type of signs that will be considered and on the standards and specifications that you should construct them to.

Please contact the Arizona Department of Transportation's District Office that oversees the location of the requested sign for the application and submittal requirements.

The following is a list of district offices and their phone numbers:

Contact list

Phoenix District Permits & Utilities	(602) 712 ~ 7522
Flagstaff District Office	(928) 774 ~ 1491
Prescott District Office	(928) 777 ~ 5861
Tucson District Office	(520) 388 ~ 4237
Globe District Office	(928) 402 ~ 5608
Holbrook District Office	(928) 524 ~ 5400
Kingman District Office	(928) 681 ~ 6010
Safford District Office	(928) 428 ~ 5470
Yuma District Office	(928) 317 ~ 2100

The following is a list of the enclosed information:

- List of local signing contractors and appropriate contacts
- Special Provision Section 608 Sign Panel
- Special Provision Section 1007 Retroreflective Sheeting
- ADOT Traffic Engineering Policies, Guidelines, and Procedures Section 332 Place Names
- ADOT Traffic Engineering Policies, Guidelines, and Procedures Section 336 Supplemental and Miscellaneous Guide Signs
- ADOT Traffic Engineering Policies, Guidelines, and Procedures Section 380 Sign Materials
- Standard Drawings: S-1 (3 sheets), S-2, S-3 (4 sheets), S-4, S-5, S-6, S-7, S-8 (4 sheets).

For additional copies, please contact Scott Orrahood at (602)712-7800.

* USE IN CONJUNCTION WITH STORED SPECIFICATION 1007REFS *

(608PANEL, 10/27/06)

SECTION 608 - SIGN PANELS:

608-1 **Description:** of the Standard Specifications is revised to read:

The work under this section shall consist of furnishing and installing sign panels in accordance with the details shown on the plans and the requirements set forth herein.

The sign panels shall be of the following types:

- Extruded Aluminum Sign Panels With Demountable Characters
- Flat Sheet Aluminum Sign Panels With Direct-Applied or Silk-Screened Characters
- Warning, Marker, and Regulatory Sign Panels
- Route Shields for Installation on Sign Panels
- EXIT ONLY for Installation on Sign Panels

608-2.01 **General:** the last paragraph of the Standard Specifications is hereby deleted.

608-2.04 **Overhead Sign Panels:** the title and text of the Standard Specifications are revised to read:

608-2.04 **Blank**

608-2.05 **Overlaid Sign Panels:** the title and text of the Standard Specifications are revised to read:

608-2.05 **Blank**

608-2.06 **Flat Sheet Aluminum Sign Panels With Demountable Characters:** the title and text of the Standard Specifications are revised to read:

608-2.06 **Blank**

608-2.08 **Overlaid Plywood Sign Panels With Direct-Applied or Silk-Screened Characters:** the title and text of the Standard Specifications are revised to read:

608-2.08 **Blank**

608-2.13 **Retroreflective Sheeting:** the title and text of the Standard Specifications are revised to read:

608-2.13 Retroreflective Sheeting, Inks and Opaque Film:

Retroreflective sheeting, sign-making inks, and opaque films shall conform to the requirements of Section 1007.

Signs shall be fabricated in accordance with the recommendations established by the manufacturer of the sign sheeting. All processes and materials used to make a sign shall in no way impact the performance, uniform appearance (day and night), or durability of the sheeting, or invalidate the sign sheeting manufacturers' warranty.

All sheeting used for letter and number text shall be of the same type and brand and shall be installed at a zero degree orientation.

608-2.14 **Demountable Characters:** of the Standard Specifications is revised to read:

(A) General:

Letters, numerals, symbols, route shields, borders, and other features of the sign message shall consist of cut-out, flat sheet aluminum legends, with direct-applied sign sheeting or other finishes, that are mounted to the sign panel with rivets as described herein. All characters shall be placed on the signs in a straight and true fashion.

Flat sheet aluminum substrates used for characters and borders shall be either aluminum alloy 3105-H14, 3003-H14, or 5052 as specified in ASTM B 209. Characters produced from the flat sheet aluminum alloy shall sit flat on the face of the sign panel without visible gap or deformation.

The thickness for letters and numbers shall be 0.032 inches. The thickness for symbols, route shields, and borders shall be 0.063 inches.

All aluminum shall be chemically treated with a chromate acid conversion type coating, or equivalent, to form an oxidation resistant barrier film that is suitable for long term outdoor application. The coating shall prevent the occurrence of oxidation that may cause streaking or discoloration on the sign. The coating shall be applied in accordance with the manufacturer's specifications, and shall have a minimum thickness of 0.002 inches.

All corners and edges of the characters shall be clean and well-defined with no apparent waviness, tears, delamination, deformation or flaws. Burrs and waste material generated from the cutting process shall be removed so characters have a clean, flat, and correct appearance.

Design of letters and numbers shall be in accordance with the project plans.

Splicing of aluminum panels will be acceptable for diagrammatic arrows or other large symbols and shields exceeding 48 inches in more than one direction. Splices, when

required, shall include a continuous four- to six-inch wide aluminum back plate that overlaps the joint. The back plate shall ensure no gap at the splice joint when the symbol is assembled and attached to the sign.

Borders on signs with demountable characters shall also be made of aluminum substrate panels, unless otherwise specified. However, in all cases borders on signs with demountable characters shall be made of the same material as the legend.

(B) Sheeting and Colors:

Sheeting or film applied to demountable characters shall be a continuous monolithic piece, without splice or patch, that covers the entire front face of the character. Splicing of the sheeting for demountable borders or characters which have a dimension larger than 48 inches in more than one direction will be allowed. Only one splice shall be allowed every four feet. When a splice is necessary, the adjoining edges shall be placed so there is no visible gap between the two pieces.

The adhesive system for sheeting and opaque films shall form a durable bond which tightly adheres to the aluminum or sign background. After attachment, the sheeting and opaque films shall not discolor, crack, craze, blister, bubble or delaminate. Sheeting and film adhesives must be warranted by the manufacturer against such defects as specified in Section 1007. Only those sheeting and film products which provide the specified warranty will be acceptable.

The color for demountable letters, numbers, symbols, and route shields on green, blue, and brown background signs shall be white, and shall conform to the requirements of Section 1007. Demountable legends on white and yellow background signs shall be black, and shall be opaque and non-reflective. Acceptable finishes for black characters shall be porcelain-enameled black, powder-coated black, or laminated black opaque acrylic film.

When borders are used with demountable characters, white legend and border shall be used on green, blue, or brown sign backgrounds, and black legend and border shall be used on white or yellow sign backgrounds. Sign sheeting conforming to Section 1007 shall be used for white borders. Black borders shall be porcelain-enameled black, powder-coated black, or laminated black opaque acrylic film.

Black porcelain enameling, black powder-coatings, or laminated black opaque acrylic film to be used for characters or borders, as specified above, shall be applied in accordance with the coating manufacturer's recommendations. The contractor shall provide copies of any warranties provided by the manufacturer for such coatings to the Engineer.

On combination signs, such as a green background sign with white characters that also includes a smaller panel with yellow background and black characters, the color scheme used for the characters and border for each portion of the sign shall be as specified above, i.e. white legend and border shall be used on the green background portion of the sign and black legend and border shall be used on the yellow background portion.

(C) Attachment of Characters and Borders:

Self plugging aluminum, protruding, regular head blind rivets shall be used to secure all demountable characters. The rivets shall conform to the applicable requirements of International Fasteners Institute (IFI) 114 standard for break mandrel blind rivets. All rivets shall be 5/32 inch in diameter with the appropriate grip range.

Rivets shall be either IFI 114 Grade 10 or 11 aluminum alloy rivets. The rivets shall have an ultimate shear and tensile strength that has been determined by IFI 135 Specification 2.1 and 2.2. The ultimate shear and tensile strength shall meet or exceed those values specified for a 5/32 inch (0.1562) nominal rivet diameter per IFI 114 Table 6 for Grades 10 or 11. A higher strength and grade aluminum rivet can be used at the option of the sign fabricator.

Rivets securing the characters to the back panel shall be of sufficient length to ensure a secure attachment and conform to the grip length specifications of the rivet manufacturer. The determination of rivet grip length shall include the total thickness of the joint. This thickness shall include the character (sheeting and aluminum sheet), spacer (if applicable) and the sign back panel (sheeting and aluminum extrusion).

The hole size used to install the rivets shall conform to the recommendation of the rivet manufacturer and Table 2 of IFI 114. Rivets shall be placed a minimum of four times the diameter of the rivet from the edge of the character being attached, e.g., 5/8 inch clearance for a 5/32 inch diameter rivet. Clearance shall be measured to the outside of the rivet head.

Minimum requirements for attaching demountable characters shall be as follows:

Straight numerals and letters such as "1" shall have three rivets, one at the top, middle and bottom. The more complex numerals and letters shall have from four to seven rivets. Letters such as "W" and "M" typically require seven rivets. Letters and numerals such as "P", "H" and "9" typically require six rivets. Letters and numerals such as "G", "S", "2", "3" and "7" typically require five rivets. A rivet shall secure each corner of the letter or numeral. For shields and symbols, rivets shall be spaced evenly around the entire perimeter. Additional rivets shall be added in the middle of the shield or symbol as necessary to eliminate bowing. Rivets for borders shall be spaced evenly around the border.

The actual number of rivets used will depend on the thickness, configuration, weight, position (with or without spacers), size of the character being attached, and the recommendations of the rivet manufacturer. The number and location of rivets shall be sufficient to secure the character to the panel so it shall not miss-align, bend or move when subjected to wind loading. Additionally, the number of rivets used shall ensure that the character does not bow or pull away from the back panel for the life of the sign. Rivets shall be placed in a defined, evenly spaced pattern which is consistent from character to character. The placement and pattern of rivets shall not interfere with the appearance of the sign from normal drive-by viewing distances. The contractor shall supply standard punch details prior to fabrication.

The protruding head and shaft of the rivets shall closely match the color of the character on which they are being applied, e.g., black characters shall be applied with black rivets. Aluminum colored rivets are acceptable for mounting white characters.

The coating used to color the rivets shall be a factory-applied anodized type finish, or equivalent, that is suitable for long term outdoor application. The coating shall have durable colorfastness and shall be capable of preventing the occurrence of oxidation that may cause streaking or discoloration on the sign. Non-factory painting of the protruding heads of the rivets is not acceptable.

608-3.01 **Fabrication:** the first sentence of the third paragraph of the Standard Specifications is revised to read:

Fabricated signs shall be stored indoors and kept dry during storage.

608-3.02 **Installation of Sign Panels:** of the Standard Specifications is modified to add:

The contractor shall provide two copies of a detailed list of all new signs installed on the project to the Engineer. The list shall include the sign identification code, the date each sign was installed (month and year), the fabricator of the sign, and the materials used to make the sign (manufacturer, type of sheeting, ink and film). The list shall be provided in a commonly used electronic spreadsheet format, such as EXCEL, and the two copies shall be submitted on either CD-ROM disks or IBM-formatted 3.5-inch floppy diskettes. Signs shall be listed in numerical order by route, direction, and milepost and, where more than one sign is installed at the same general location, a letter subscript.

Signs shall be placed at the same orientation along the roadway so that the entire legend of the signs appear uniform under normal viewing conditions, both day and night.

Upon the installation of each finished sign, the contractor shall place information on the back of the sign showing the sign identification code, the sign fabricator, the manufacturer of the sheeting used, and the month and year of the installation. The formatting of the required information shall be as shown on the plans. The information shall be positioned to be readily visible from a vantage point outside the flow of traffic and not obstructed by sign posts, extrusions, stringers or brackets. All letters shall be made of a long life material such as a black opaque acrylic film. Signs not marked as required will not be eligible for payment.

Construction signs are exempt from the installation information requirement unless noted otherwise on the project plans.

Bolts shall be tightened from the back of the sign by holding the bolt head stationary on the face of the panel to prevent damage to the sheeting surface.

SECTION 1007 - RETROREFLECTIVE SHEETING: of the Standard Specifications is revised to read:

1007-1 General Requirements:

Retroreflective sheeting shall consist of a retroreflective system having a smooth outer surface. The sheeting shall have a pre-coated adhesive on the back side protected by an easily removable liner, except for self-supporting products having a Class V backing, such as roll-up signs and some types of traffic cone collars. Sheeting shall conform to criteria listed in ASTM D 4956-04 for the applicable type and class, unless otherwise specified. All references herein to ASTM D 4956 shall refer to ASTM D 4956-04.

Only those retroreflective sheeting, inks, and film products that are currently shown in the Department's Approved Product List (APL) shall be used. Copies of the APL are available on the internet from the Arizona Transportation Research Center (ATRC), through its PRIDE program.

A Certificate of Compliance, conforming to the requirements of Subsection 106.05, shall be submitted. The Certificate of Compliance shall identify the retroreflective sheeting type, backing class, make of sheeting, inks, and film intended for use in all manufactured devices, including signs, channeling devices, mileposts, object markers, guard rail markers, delineators and reference markers. The Engineer may accept all materials based on the certification or may require the contractor to furnish additional information or laboratory test results. Additionally, the Engineer may perform measurements on materials to determine their compliance with these specifications. Signs and other devices that have sheeting, inks or films that do not meet these requirements shall be rejected and shall be replaced at no additional cost to the Department.

1007-2 Material Types:

The type of sheeting to be used in any given application will be called out on the project plans. Type VI is a flexible sheeting material suitable for use with roll-up signs. For applications where more than one sheeting type is allowed, the contractor may use a higher grade of sheeting than specified at no additional cost to the Department.

Materials used for a particular application shall be of the same ASTM type, manufacturer, and product for all signs of the same type in the project.

Opaque films used with sheeting shall be acrylic type films.

Direct-applied and demountable black characters shall be non-reflective.

1007-3 Visual Appearance, Luminance and Color Requirements:

Except as specified herein, the color of the sheeting, ink or film shall conform to the ADOT Manual of Approved Signs, the Manual on Uniform Traffic Control Devices (MUTCD), and the plans.

All warning signs with yellow backgrounds shall use fluorescent yellow sheeting.

All work zone signs with orange backgrounds shall use fluorescent retroreflective orange sheeting, except that non-reflective sign materials may be used for temporary work zone signs where the signs will be clearly visible under available natural light.

All sheeting, inks and film used shall be uniformly colored so there is no visual variation in their appearance on the same sign or from sign to sign of the same colors.

Standard colors specified for sheeting, processing inks, and films shall, as applicable, match visually and be within the color tolerance limits required by Highway Tolerance Charts issued by the Federal Highway Administration. Additionally, for the retroreflective sheeting, unless otherwise noted, the Luminance Factor (Daytime Luminance) and Color Specification Limits (Daytime) shall conform to the applicable requirements of ASTM D 4956.

In addition to the luminance and color requirements, fluorescent orange sheeting shall have the capacity to effectively fluoresce outdoors under low light conditions. For all applications requiring fluorescent orange sheeting, the contractor shall provide a letter to the Engineer from the manufacturer certifying that the sheeting to be used is fluorescent.

1007-4 Coefficient of Retroreflection:

The coefficient of retroreflection shall meet the minimum requirements of ASTM D 4956 for the type of retroreflective sheeting specified.

All black opaque films shall have a maximum coefficient of retroreflection of 1.0 or less at an observation angle of 0.2 degrees and entrance angle of -4.0 degrees.

1007-5 Color Processing:

Transparent and opaque inks used for post or pre-screen printing of signs shall be of a type and quality specified by the sheeting manufacturer, and shall conform to the applicable requirements of the MUTCD and the Federal Highway Administration for traffic signs. The inks shall be applied in a manner, and with equipment, that is consistent with the ink manufacturer's recommendations. Additionally, the signs produced shall have a uniform legend of consistent stroke width and sharply defined edges, without blemishes that would negatively impact appearance, color or required retroreflectivity.

For sheeting applications using black ink, the maximum coefficient of retroreflection shall be 1.0 or less at an observation angle of 0.2 degrees and entrance angle of -4.0 degrees.

1007-6 Adhesive:

Reflective sheeting and film adhesives shall be either Class I or II as specified in ASTM D 4956 and as modified herein.

Pressure sensitive adhesive shall be an aggressive tack type that requires no heat, solvent or other pre-application preparation of the sheeting or film for its adhesion to clean aluminum, plywood, or reflective sheeting surfaces. Pretreatment of plastic surfaces shall be done as recommended by the sheeting manufacturer.

Heat-activated adhesives shall allow positioning under normal working conditions and temperatures without damage to the materials or application surface. This type of adhesive shall be activated by applying heat in excess of 150 degrees F to the material using a heat vacuum process. No pre-treatment of the heat activated adhesive shall be necessary.

The adhesive shall form a tight weatherproof durable bond that shall endure under all weather conditions for the required time of durability for that material. During this period the material shall remain bonded to its surface without discoloration, cracking, crazing, peeling, blistering, dimensional change or alignment change.

1007-7 Weather Testing:

For the evaluation of sign sheeting products the Department has adopted a desert environment, 45 degree, south-facing outdoor acceleration test method. Sheeting will be tested for the time periods specified in Subsection 1007-8. The Department's test method will be considered to produce a two to one time-acceleration ratio for equivalent vertical exposure.

1007-8 Durability Requirements:

Sheeting stability will be determined using a durability rating which shall be equal to twice the testing periods listed below. Sheeting must be warranted by the manufacturer against the defects listed below for a period equal to the specified durability rating for each type of sheeting product. Only those sheeting products which provide the specified warranty will be acceptable.

Type IV, VIII, IX, X and XI sheeting shall be weather-tested, as specified above, for a period of 60 months. Orange colored sheeting used for construction zone signing, barricades, and channeling devices shall be weather-tested for a period of 18 months. All other sheeting shall be weather-tested for a period of 30 months. In all cases the related inks and films shall be tested along with the respective sheeting, and shall be subject to the same durability requirements as the sheeting.

Type IV, VIII, IX, X and XI sheeting, related inks and films shall have a minimum ten year durability rating. All orange sign sheeting shall have a minimum durability rating of three years. All other sheeting, films, and inks shall have a minimum durability rating of five years.

After weather testing for the periods specified above, sheeting and related inks and films shall show no significant degradation or reduced performance. Unacceptable degrees of degradation and reduced performance are as listed below:

(1) Bubbles, wrinkles, cracks or breaks on any portion of the applied materials greater than three inches in length that result in a negative appearance or concerns of additional degradation.

(2) Significant shrinkage that causes the material to curl or to pull away from the background.

(3) Significant delaminating of any material or layer (sheeting to substrate, sheeting to sheeting, sheeting to film, ink to sheeting, film to sheeting or film to film).

(4) Significant visible discoloration, including clouding or chalking.

(5) A loss of transparency of any transparent sheeting, ink or film.

(6) A loss in opaqueness of any opaque ink or film.

(7) Significant cracking, blistering, ripping, flaking, curling or chipping of any sheeting, ink or film.

(8) A loss of nighttime retroreflectivity as observed at night under normal conditions, or as defined and measured with a portable retroreflectometer at an observation angle of 0.2 degrees and entrance angle of -4.0 degrees. The measured coefficient of retroreflection shall be consistent with what would be expected of the type of material being measured, normal manufacturing variations, the time that the material has been in the field, and FHWA requirements.

Those sheeting products which have been evaluated for the time periods specified above using the Department's own testing and evaluation program, and that have been shown to meet the durability requirements listed herein, are included on the Approved Products List.

Manufacturer's guarantees or warranties on all traffic sign material shall be transferred to the Department upon completion and acceptance of the project in accordance with the requirements of Subsection 106.13.

1007-9 Application:

The sheeting, inks, clear coats (if required), and films shall be applied as specified by the manufacturer. The applied sheeting or film shall not have bubbles, wrinkles or foreign materials beneath the reflective sheeting, ink or film.

332 PLACE NAMES

Place name signs may be installed on State highway right-of-way provided that one of the following criteria is met:

A. The town or city is incorporated by the State of Arizona.

B. The unincorporated town is a community which is on the official State highway map, has a system of streets, and a U.S. Post Office.

C. The unincorporated community is of historical importance and continues to provide an impact in such fields as architecture, history, archeology, and culture and is listed in the Arizona State Historical Register.

The town limit or city limit (I10-5) sign shall be located at the political boundary line. The local agency may install a unique town or city limit sign at their own expense, as long as it conforms to the requirements of the Manual on Uniform Traffic Control Devices. **The local agency signs shall be installed by permit or as an approved item of a maintenance agreement.**

When an urban district extends beyond the limits of the town or city by a quarter mile or more, the entering community (I10-2) sign may be installed in addition to the town or city limit sign except on freeways.

Subdivisions, village cores, and other areas that are located within a city, town, or unincorporated community are not eligible for place name signing.

Monuments for cities and towns shall not be installed on any State highway right-of-way.

336 SUPPLEMENTAL AND MISCELLANEOUS GUIDE SIGNING REQUESTS

Supplemental and miscellaneous guide signs may be considered for public facilities which generate a significant volume of traffic that is unfamiliar with the local area. Only non-profit facilities are eligible for supplemental and miscellaneous guide signing unless specifically included in this policy.

Supplemental and miscellaneous guide signs can reduce the effectiveness of other more important guide signs by overloading the driver's capacity to receive and make decisions on visual messages. For this reason criteria have been developed for consideration of supplemental and miscellaneous signing. However, satisfying the criteria does not assure that supplemental or miscellaneous guide signs will be approved and installed.

Only one supplemental guide sign may be used at each interchange or intersection approach. If a supplemental guide sign is used, it may display one or two destinations followed by the interchange number or if the interchange is not numbered, by the legend NEXT RIGHT or SECOND RIGHT, as appropriate. **Where two or more facilities are affiliated with the same agency, i.e., a football stadium within a university, only one destination will be signed.** Supplemental guide signs will not normally be provided in advance of freeway to freeway interchanges. Where a destination is reachable from more than one traffic interchange or turnoff along a state highway, only the most simple, direct, and convenient route to the destination will be considered for signing.

Miscellaneous guide signs identifying geographical features such as rivers, summits, and political boundaries may be approved if they do not detract from signing for interchanges or other critical decision points. Miscellaneous guide signs shall be consistent with other guide signs in design and legibility.

Signs for recreational and cultural interest facilities/areas shall be rectangular in shape and normally have a white legend and border on a brown background. However, when a recreational or cultural interest destination is shown on the same sign with a non-recreational destination, the sign shall have a green background.

When the destination is not located on the intersecting crossroad of the traveled highway, signing shall not be installed until the local agency has installed appropriate trailblazer signing for the logical direction of traffic to the facility.

The following types of facilities shall be excluded from guide signing:

- **churches**
- **libraries**
- **clubs**
- **elementary and high schools**
- **shopping centers and malls**

- **private businesses**
- **subdivisions**
- **city parks**
- **public buildings**
- **post offices**
- **court houses**
- **privately-owned museums**
- **privately-owned cemeteries**
- **gaming casinos**
- **other places of local nature**

In addition to the foregoing general requirements, specific criteria for the approval and installation of the various types of supplemental and miscellaneous guide signs are as follows:

336.1 SIGNING FOR AIRPORTS

An airport may be considered for signing when the facility is located within the following distance from the highway turnoff or exit ramp terminal:

Major Metro Area*	Urban Area**	Rural Area
5 miles	8 miles	10 miles

*Urban area with 50,000 or more population.
**Urban area with 5,000 - 49,000 population.

The following criteria must also be met:

1. On conventional roadways, signing may be considered provided one of the following conditions is met:

   a. The airport has regularly scheduled commercial air travel and mail pickup, or

   b. The airport is owned and operated by a political subdivision.

2. On freeways, signing may be considered when a car rental or taxi service is available at all times the airport is open (a measure of the number of persons using the facilities) and one of the following conditions met:

   a. The airport has regularly scheduled commercial air travel and mail pickup, or

   b. The airport is publicly owned and has an operating FAA tower (a measure of air activity).

Dependent on the type of airplane common to each airport, two airplane symbol sign designs are available: a jet (I-5) and a propeller plane (I5Z).

336.2 SIGNING FOR MILITARY INSTALLATIONS

For a military installation to be considered for signing, the facility must meet one or more of the following:

1. Be the principle traffic generator for the traffic interchange or intersection, or

2. Have 3,000 or more military and civilian personnel, and

    a. In urban areas, be within 5 miles of the highway turnoff or exit ramp terminal. The distance may be increased 1 mile for each 1,000 additional personnel.

    b. In rural areas, be within 10 miles of the highway turnoff or exit ramp terminal. The distance may be increased 2 miles for each 1,000 additional personnel.

336.3 SIGNING FOR MILITARY CEMETERIES AND MEMORIALS

For a military cemeteries and military memorials to be considered for signing, the site must meet one or more of the following:

1. A cemetery is to be recognized formally as a military cemetery.

2. A memorial has to:
    a. Be recognized formally as a military memorial.
    b. Have 4 or more individuals memorialized.

In addition, the site has to be within 5 miles of the highway turnoff or exit ramp terminal in urban areas, and within 10 miles of the highway turnoff or exit ramp terminal in rural areas.

336.4 SIGNING FOR RECREATIONAL AND CULTURAL INTEREST FACILITIES/AREAS

1. Guide signing may be considered for the following recreational/cultural interest facilities/areas:

    a. National parks, such as Petrified Forest.

    b. National forest boundaries and significant forest attractions such as camping areas and trailheads.

c. National recreation areas, such as Lake Mead.

d. National monuments, such as Walnut Canyon.

e. National historic sites, such as Hubbell Trading Post.

f. National landmarks, such as Lowell Observatory.

g. State parks, such as Picacho Peak.

h. Publicly-owned museums of regional significance.

i. Historic or pioneer cemeteries as confirmed by the State Historic Society.

j. Civic centers.

2. In addition to those facilities/areas described in the preceding section, recreational and cultural interest facility/area signing may be considered when a facility/area is a significant destination from a numbered highway and the recreational or cultural interest facility/area is included in the guideline on Distance Signing and Control Cities (see Section 331).

   When warranted, signs should be located at the first point at which an access road intersects the highway.

3. Recreational and cultural interest facility/area signing may be included at the junction of two or more numbered routes or at a freeway interchange only where direct access to the facility/area is located on one of the intersecting routes.

4. Special applications of recreational facility/area signing are as follows:

   a. Lakes, rivers, dams, mountains, valleys, summits and other geographical areas may be considered for signing when it is necessary to identify the area, there are no other reasonable destinations, and the geographical area cannot be identified with the crossroad name.

   b. County parks may be considered for signing if they contain camping or recreational facilities of more than local interest, such as Colossal Cave and Tucson Mountain Park.

   c. State and county fairgrounds may be considered for signing. Signing may be permanent or temporary, depending upon the usage of the facility. The sign legend will indicate “NAME/ COUNTY/ FAIRGROUNDS”. County may be abbreviated “CO.”, due to limited sign size.

d. Recreation areas for snow skiing may be considered for signing if the following criteria are met:

(1) The ski area is located within 8 miles of the highway exit/turn-off designated by the signing, and

(2) Necessary trailblazer signing off the highway is installed by the agency having jurisdiction over the local road to the ski area, and

(3) Ski area signs will not detract from other traffic control devices.

The legend on the advance guide sign shall be NAME (i.e., SNOW BOWL)/SKI AREA/ _____MILES or NAME/SKI AREA/NEXT RIGHT. The legend on the sign at the turn shall be NAME/SKI AREA/ with an arrow in combination and may include the appropriate mileage if the entrance is not located adjacent to the highway. The name of the operating agency, community, group, or enterprise shall not appear in the legend on any sign.

e. Wildlife viewing areas may be signed if they are identified in the *Arizona Wildlife Viewing Guide* and are located on or are reachable from a Type 1 Road as identified in Section 2H-2 Application of Recreational and Cultural Interest Area Signs of the Manual on Uniform Traffic Control Devices (MUTCD) and meet the following criteria:

The wildlife viewing area is located:

(1) In a turnout immediately adjacent to the highway, or

(2) On or reachable from a trailhead or reachable from a local access road both of which are traversable under normal weather conditions by conventional powered passenger vehicles including automobiles, pickups, camping trailers, and other common types of recreational vehicles, and

(3) The wildlife viewing area or trailhead to the wildlife viewing area is located within 1 mile of the highway turnoff.

The Wildlife Viewing Area sign, symbolized by a pair of binoculars, and the Wildlife Viewing Area educational plaque are herein added to the General Information Section in the Symbol Usage column of Table II-6 Category and Usage Chart of MUTCD Section H, Recreational and Cultural Interest Area Signs, for application on both Road Type 1 and 2. The signs are intended for use in accordance with the

provisions of MUTCD Section H except that they are not normally intended for use on freeways or expressways.

Where the wildlife viewing area is the only identified destination along a local access road or attraction at a highway turnout, two signs shall be used for each approach to the intersection or turnout: one at the intersection or turnout and one from 1/4 to 1/2 mile in advance of the intersection or turnout. The sign at the intersection or turnout shall utilize a horizontal arrow indicating the proper direction to the wildlife viewing area. The advance sign shall utilize a distance plate. Both the arrow and the distance plate shall be located below the Wildlife Viewing Area sign.

Where the local access road or highway turnout has existing destination signs in place, the Wildlife Viewing Area signs may be installed:

(1) At one location as an independent Supplemental Guide Sign or, where appropriate,

(2) At the locations of and underneath the existing destination signs or incorporated into the display of other existing recreational symbol signs.

Where trailblazer signs are needed along a local access road to provide confirming directions to the wildlife viewing area, the trailblazer signs shall be provided by the agency having jurisdiction over the local access road. If the agency does not agree to provide, install, and maintain needed trailblazer signs, Wildlife Viewing Area signs shall not be installed on the highway.

5. Where a recreational facility/area is open 24 hours per day, 7 days per week, both the legend and background of the recreation sign shall be reflectorized. If the recreation facility/area is only open during daylight hours, the following guidelines for recreation signs shall govern:

a. Both the legend and the background should be reflectorized if that is the only sign for a particular traffic interchange or intersection.

b. If a recreation sign is a supplemental guide sign and there are green guide signs displayed for other destinations, the legend and background of the recreation sign should be non-reflectorized.

c. When a recreation facility/area is not open 24 hours a day, the hours of operation should be displayed on the sign located at the turn-off, or at the freeway exit ramp terminal. Where a recreational facility/area is seasonal in operation, the signing shall be removed or covered during the off-season.

6. Where appropriate, recreational facility/area signing may be supplemented with motorist services signing. Such services signing should not be installed, however, except when justified on the basis of an engineering and traffic investigation. Motorist services signing for recreational facilities/areas shall be consistent with Section 353.

   Where motorist services signing is provided for a recreational facility/area and where the facility/area is under a jurisdiction other than the State, the costs for such services signing shall be borne by the requesting agency and ADOT.

336.5 SIGNING FOR SPORTS FACILITIES

Sports facilities shall not normally be signed unless temporary signs are needed to enhance traffic operations. The placement of temporary signs should be made in cooperation with the proper enforcement agency which should cover or remove the signs when they are not needed.

Permanent signing may be considered for sports facilities when the facility is used throughout the year and the annual attendance equals or exceeds the following values:

Major Metro Area*	Urban Area**	Rural Area
300,000	250,000	200,000

* Urban area with 50,000 or more population.
** Urban area with 5,000-49,999 population.

336.6 SIGNING FOR COLLEGES AND UNIVERSITIES

Signing for colleges and universities shall be in accordance with Administrative Rule R17-3-901, Signing for Colleges and Universities.

336.7 MISCELLANEOUS GUIDE SIGNS

Roadways such as the Apache Trail, Coronado Trail, and Pinal Pioneer Parkway may be signed.

Arizona State governmental facilities which serve the general public and Federal governmental facilities, such as Veterans Administration hospitals and Federal prisons, may be signed.

Indian Reservation boundaries and political boundaries may be signed. Regional area boundaries significant to State tourism and approved by the State Legislature also may be signed.

380 SIGN MATERIALS

The table below lists the sheeting alternatives that are acceptable for each category of signing.

The type of sheeting to be used in any given application will be called out on the project plans. If no sheeting type is specified, the default selection shall be the lowest type of sheeting shown in the table for a specific use. With few exceptions, designers are to use the lowest grade sheeting indicated in the table for the specified application. Use of a higher grade of reflective sheeting shall require approval of the State Traffic Engineer. Use of sign sheeting other than that specified in this section shall require approval by the State Traffic Engineer.

SIGN TYPE OR APPLICATION	TYPE OF SHEETING					
	IV	VI	VIII	IX	X	XI***
Warning Signs (Fluorescent)			X	X	X	X
Regulatory Signs (White)	X		X	X	X	X
Regulatory Signs (Red)			X	X	X	X
Guide Sign-Backgrounds	X		X	X	X	X
Direct Applied Characters and Shields on Guide Signs			X	X	X	X
Demountable Characters and Shields on Guide Signs			X	X	X	X
Route Marker Signs and Auxiliaries (stand-alone)	X		X	X	X	X
Orange Work Zone Signs (Fluorescent)*			X	X	X	X
Orange Work Zone Signs (Roll-up)**		X				X
Barricades, Channelizers and other Work Zone devices	X		X	X	X	X
Milepost Markers	X		X	X	X	X
Object Markers, Guard Rail Markers, and Delineators			X	X	X	X
Object Markers for Guard Rail End Treatments, and Impact Attenuators (Fluorescent)			X	X	X	X

* Orange Warning Work Zone signs shall use prismatic fluorescent orange sheeting per the ADOT Approved Products List (**http://azdot.gov/TPD/ATRC/pride/index.asp**)

** Non-reflective sign materials may be used for strictly daytime applications such as maintenance and survey work where the signs may be clearly visible under available natural light.

*** Pending ASTM approval of Type XI sheeting.

The designations and requirements for sheeting shall conform to American Society of Testing Materials (ASTM) D4956-04 Standard Specification for Retroreflective Sheeting for Traffic Control, unless otherwise noted. Materials used for a particular application shall be of the same ASTM type, manufacturer, and product for all signs of the same type in the project.

Orange warning signs shall use fluorescent orange sheeting. The only exception is for warning signs strictly used in daytime applications such as maintenance and survey work where the signs may be clearly visible under available natural light, then non-reflective sign materials may be used.

The Type VI shall be a flexible prismatic lens element material with a Class 5 backing that is specifically designed for roll-up signs.

Designers, construction and maintenance personnel need to become familiar with the Approved Products List (APL) which is maintained by the Arizona Transportation Research Center through the PRIDE program and available through that office, or on the ADOT intranet and internet at http://azdot.gov/TPD/ATRC/pride/index.asp, because not all colors or types of sheeting products have been approved for use. For instance, some inks used in printing of certain types of regulatory and guide signs have not performed satisfactorily in testing and therefore any signs using those inks are unacceptable.

Details on direct applied and demountable copy, as well as other aspects of signs and sign sheeting may be found in Sections 608 and 1007 of the Standard Specifications. All potential users need to become familiar with these parts of the Standards and any revisions that may be issued in Stored Specification or Special Provision format.

NO	DESCRIPTION OF REVISIONS	MADE BY	DATE
1	RE-ISSUE	L. LOPEZ	5/03
2	TYPO ERRORS CORRECTED	L. LOPEZ	7/03
3	SLIP BASE REQUIREMENTS (TABLE) REVISION	L. LOPEZ	8/04
4			

TABLE 2S - SINGLE POST

2" (2S) SINGLE POST 12 GAUGE,
POST REQUIRED,
SIGN AREA IN SQUARE FT.

PANEL CENTROID HEIGHT H+(D/2)	5	10	15	20
6	1	1	2	2
7	1	1	2	2
8	1	2	2	
9	1	2	2	
10	1	2		
11	1	2		
12	2			

TABLE 2½T - TELESCOPING POST

2¼" & 2½" (2½T) TELESCOPING POST 12 GAUGE,
POSTS REQUIRED,
SIGN AREA IN SQUARE FT.

PANEL CENTROID HEIGHT H+(D/2)	5	10	15	20	25	30	35	40	45	50	55	60	65	70	75	80	85	90	95	100	105	110
6	1	1	1	1	1	1	1	2	2	2	2	2	2	2	2	3	3	3	3	3	3	3
7	1	1	1	1	1	1	2	2	2	2	2	2	2	3	3	3	3	3	3			
8	1	1	1	1	1	2	2	2	2	2	2	3	3	3	3	3						
9	1	1	1	1	2	2	2	2	2	3	3	3	3	3								
10	1	1	1	1	2	2	2	2	3	3	3	3	3									
11	1	1	1	2	2	2	2	3	3	3	3											
12	1	1	1	2	2	2	3	3	3													

ALL TELESCOPING POSTS SHALL BE
INSTALLED ON SLIP BASE.

TABLE 2½S - SINGLE POST

2½" (2½S) SINGLE POST 12 GAUGE,
POST REQUIRED,
SIGN AREA IN SQUARE FT.

PANEL CENTROID HEIGHT H+(D/2)	5	10	15	20	25	30	35	40	45	50	55	60	65
6	1	1	1	1	2	2	2	2	3	3	3	3	3
7	1	1	1	2	2	2	2	3	3	3	3		
8	1	1	1	2	2	2	3	3	3				
9	1	1	2	2	2	3	3	3					
10	1	1	2	2	3	3	3						
11	1	1	2	2	3	3							
12	1	2	2	3	3								

SLIP BASE REQUIRMENTS

	2S	2½S	2½T
1 POST	NO	NO	SLIP BASE
2 POST	NO	SLIP BASE	SLIP BASE
3 POST	DO NOT USE 3 POST	SLIP BASE	SLIP BASE

NOTES:

1. SIGNS GREATER THAN 42 INCHES IN WIDTH SHALL BE MOUNTED ON TWO OR MORE POSTS. WARNING AND YIELD SIGNS ARE EXPECTED ON NON-FREEWAYS, RAMPS AND CROSS-ROADS. SEE STD DRAWING S-3, SHEET 3 OF 4.
2. SLIP BASES SHOULD NOT BE USED IN LOCATIONS PROTECTED BY GUARDRAIL, BARRIER, OR OUTSIDE THE CLEAR ZONE, (30 FT. FROM EDGE LINE).

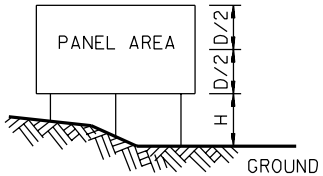

CENTROID HEIGHT = H+(D/2)
ALWAYS USE LARGEST H

0.35W MINIMUM SPACING
0.15W MINIMUM ON EDGE

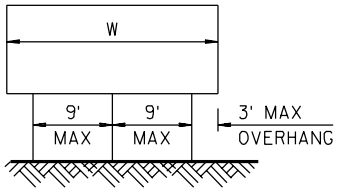

SHEET 1 OF 3
NOT TO SCALE

DESIGN APPROVED
SIGNATURE ON FILE
APPROVED FOR DISTRIBUTION

ARIZONA DEPARTMENT OF TRANSPORTATION
INTERMODAL TRANSPORTATION DIVISION
STANDARD DRAWINGS

REV. 8/04

SQUARE TUBE SIGN POST
SELECTION CHARTS

DRAWING NO. S-1

NO	DESCRIPTION OF REVISIONS	MADE BY	DATE
1	RE-DESIGN	M. ZUBI	5/03
2	NOTE #2 SPELLING CORRECTION	L. LOPEZ	5/06
3			
4			

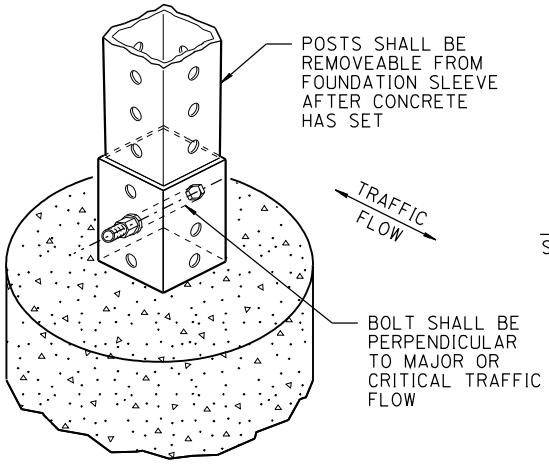

DETAIL "A"

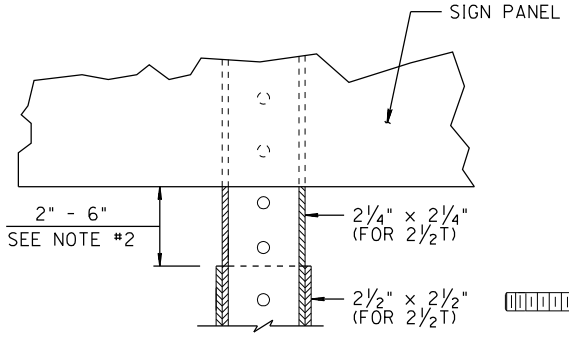

TELESCOPING POST INSTALLATION

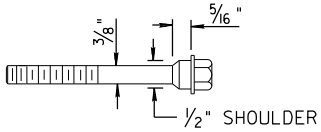

SHOULDER BOLT

NOTES:

1. FOR ESTIMATING PURPOSES; CONCRETE QUANTITY PER POST IS 0.09 CUBIC YARDS FOR 1 FOOT DIAMETER FOUNDATIONS.
2. ON TELESCOPING INSTALLATIONS UNDER 5000 FT. ELEVATION, THE OUTER SLEEVE SHALL BE BETWEEN 2 INCHES AND 6 INCHES BELOW THE BOTTOM OF THE SIGN PANEL. FOR INSTALLATION ABOVE 5000 FT., THE SLEEVE SHALL EXTEND TO THE TOP OF THE PANEL.

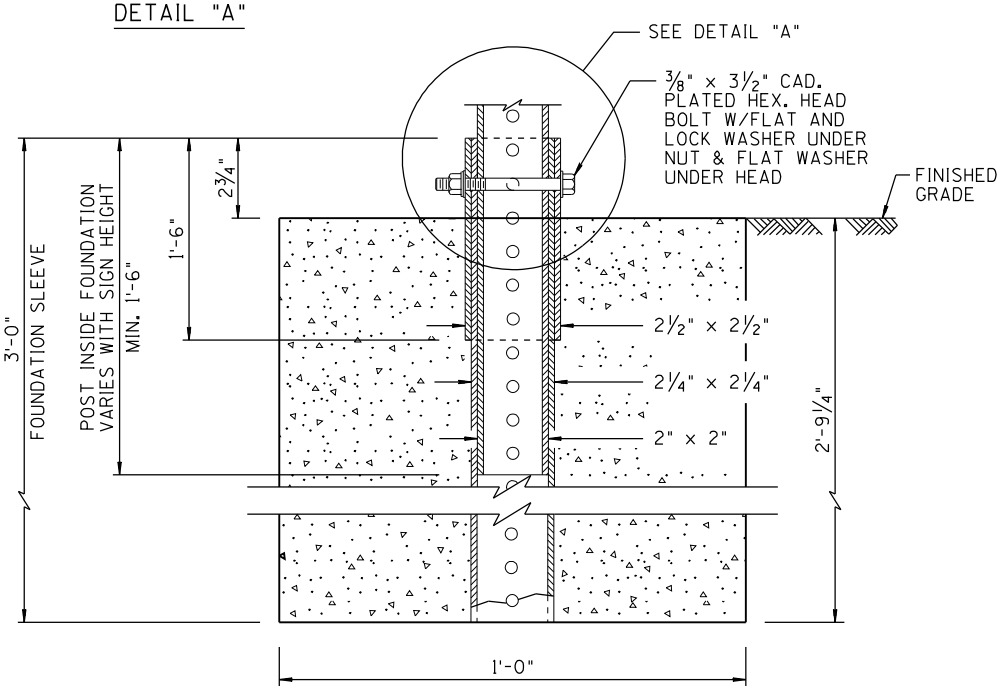

2" SINGLE POST CONCRETE FOUNDATION DETAIL

IN WEAK SOILS

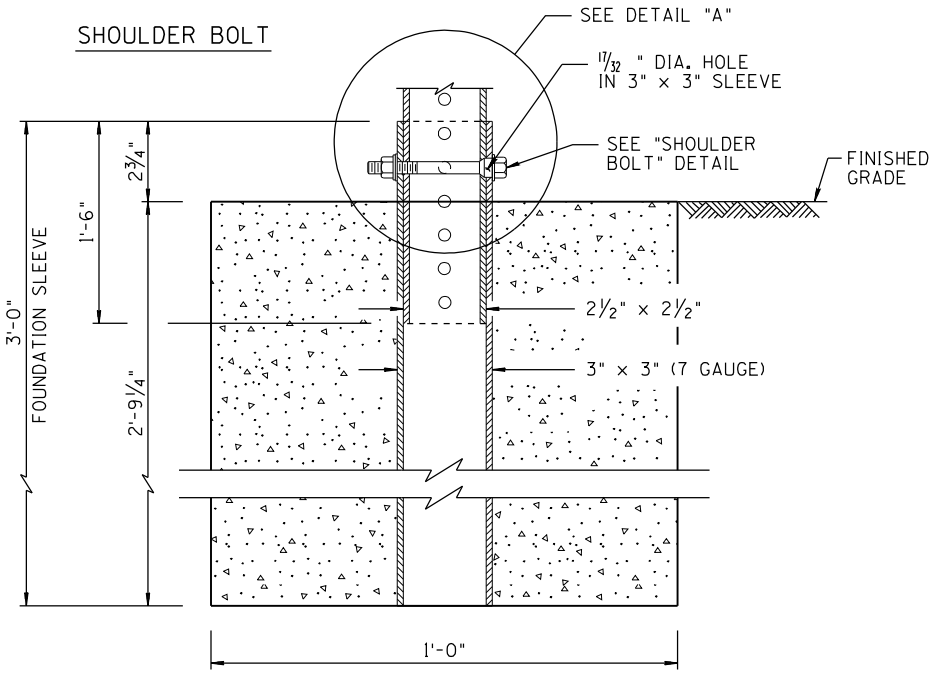

2½" SINGLE POST CONCRETE FOUNDATION DETAIL

IN WEAK SOILS

SHEET 2 OF 3
NOT TO SCALE

DESIGN APPROVED: SIGNATURE ON FILE	ARIZONA DEPARTMENT OF TRANSPORTATION INTERMODAL TRANSPORTATION DIVISION STANDARD DRAWINGS	REV. 5/06
APPROVED FOR DISTRIBUTION	PERFORATED SIGN POST FOUNDATION	DRAWING NO. S-1

NO	DESCRIPTION OF REVISIONS	MADE BY	DATE
1	RE-ISSUE	L. LOPEZ	2/02
2	RE-DRAWN	M.Z. / L.L.	9/02
3	RE-DRAWN	M.Z. / L.L.	5/03
4			

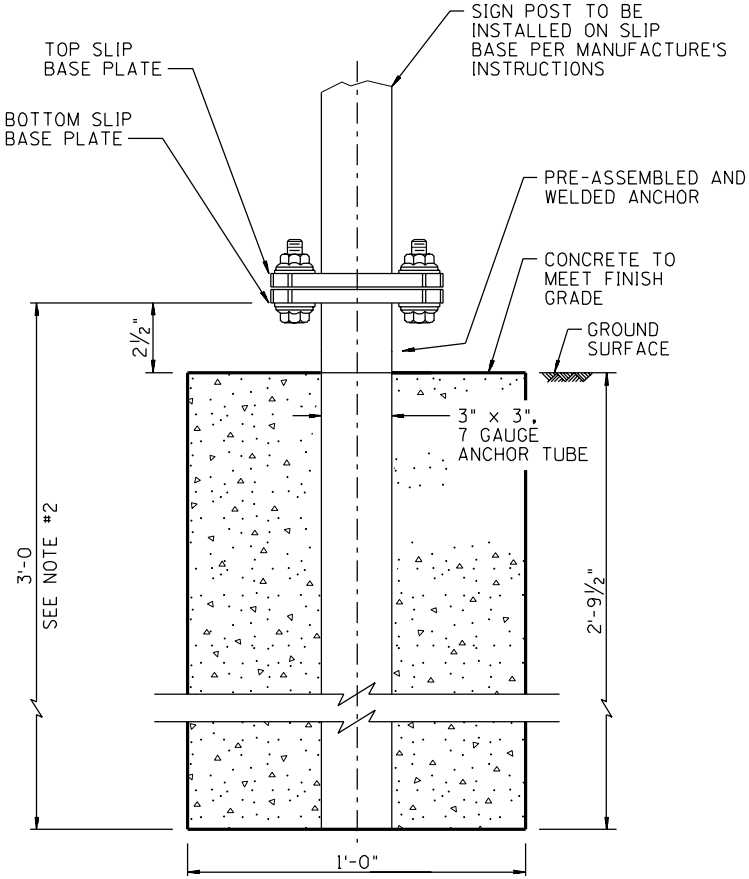

FOUNDATION DETAILS

PRE-ASSEMBLED SLIP BASE UNIT. EXACT CONFIGURATION VARIES. CONTACT MANUFACTURER ON ADOT APPROVED PRODUCT LIST FOR INFORMATION AND REQUIREMENTS.

NOTES:

1. ALL SLIP BASES SHALL BE PRE-ASSEMBLED BY THE MANUFACTURER. THE SLIP BASE SHALL BE INSTALLED ACCORDING TO THE MANUFACTURER'S INSTRUCTIONS.
2. ANCHOR TUBE AND BOTTOM SLIP BASE SHALL BE WELDED TOGETHER INTO A ONE-PIECE ASSEMBLY INSTALLED IN THE FOUNDATION.

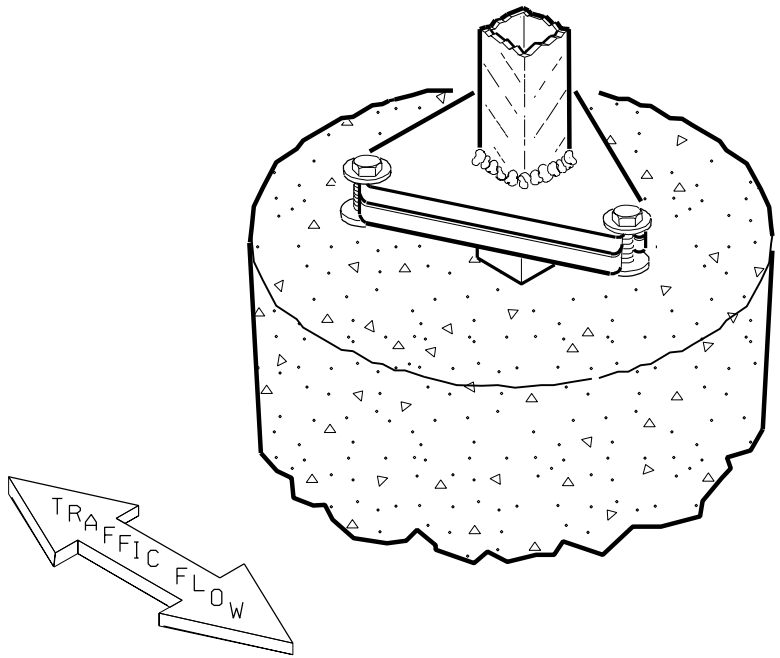

SHEET 3 OF 3
NOT TO SCALE

DESIGN APPROVED: SIGNATURE ON FILE	ARIZONA DEPARTMENT OF TRANSPORTATION INTERMODAL TRANSPORTATION DIVISION STANDARD DRAWINGS	REV. 5/03
APPROVED FOR DISTRIBUTION	PERFORATED SIGN POST FOUNDATION	DRAWING NO. S-1

NO	DESCRIPTION OF REVISIONS	MADE BY	DATE
1	RE-ISSUE	L. LOPEZ	2/02
2			
3			
4			

* WHEN SIGN IS 30' OR MORE FROM EDGE OF PAVED SHOULDER, THE 7'-0" SHOULDER CLEAR MAY BE REDUCED TO 5'-0" MIN.

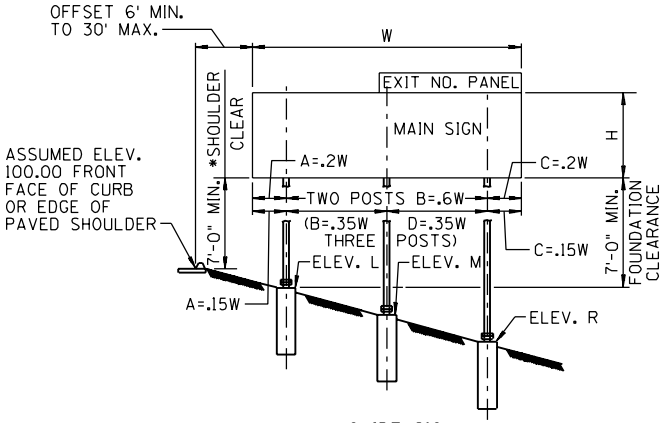

GUIDE SIGN
INSTALLED ON SHOULDER

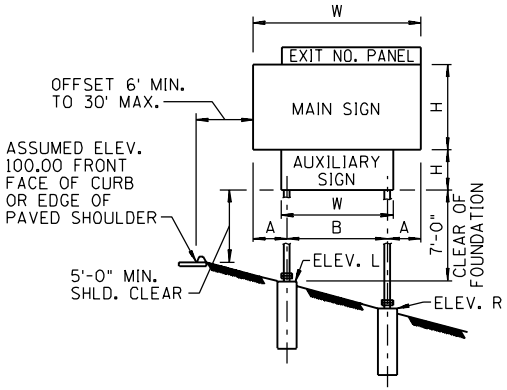

GUIDE SIGN WITH AUXILIARY SIGN
INSTALLED ON SHOULDER

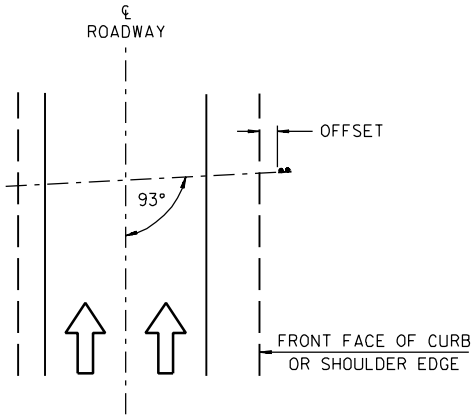

TYPICAL SIGN INSTALLATION
ON SHOULDER

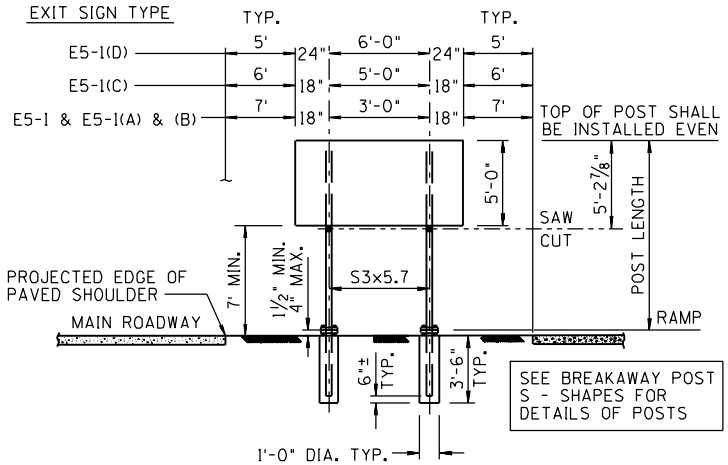

TYPICAL EXIT GORE SIGN

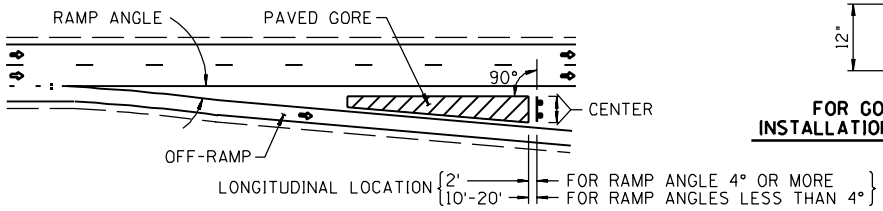

EXIT GORE SIGN LOCATION

THE LOCATION MAY BE SHIFTED BY THE ENGINEER TO SECURE A MORE DESIRABLE LOCATION.

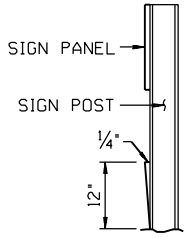

FOR GORE INSTALLATIONS ONLY

SHEET 1 OF 4
NOT TO SCALE

DESIGN APPROVED: SIGNATURE ON FILE	ARIZONA DEPARTMENT OF TRANSPORTATION INTERMODAL TRANSPORTATION DIVISION STANDARD DRAWINGS	REV. 2/02
APPROVED FOR DISTRIBUTION	OFFSETS, CLEARANCES AND MOUNTING DETAILS FOR GUIDE SIGNS AND BREAKAWAY POST INSTALLATION	DRAWING NO. S-3

NO	DESCRIPTION OF REVISIONS	MADE BY	DATE
1	RE-ISSUE	L. LOPEZ	2/02
2			
3			
4			

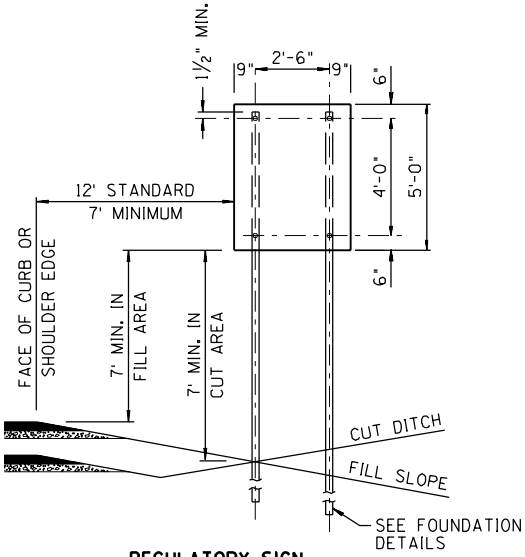

REGULATORY SIGN

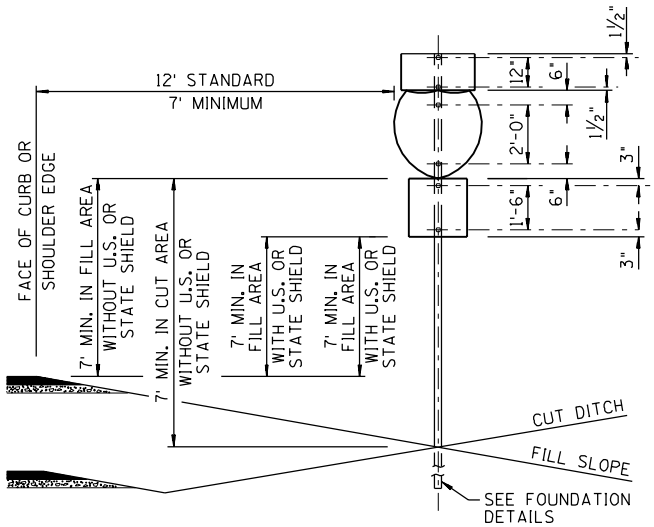

ROUTE MARKER ASSEMBLY

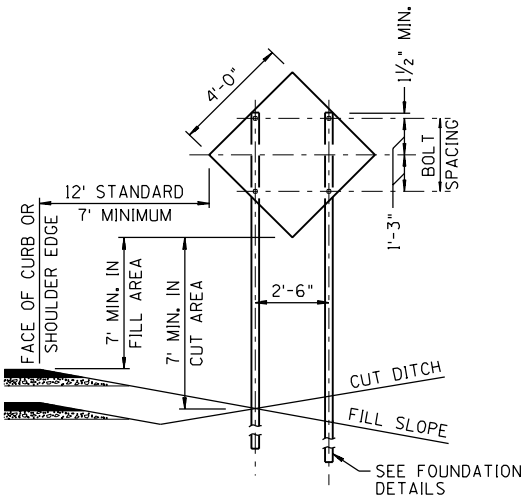

WARNING SIGN

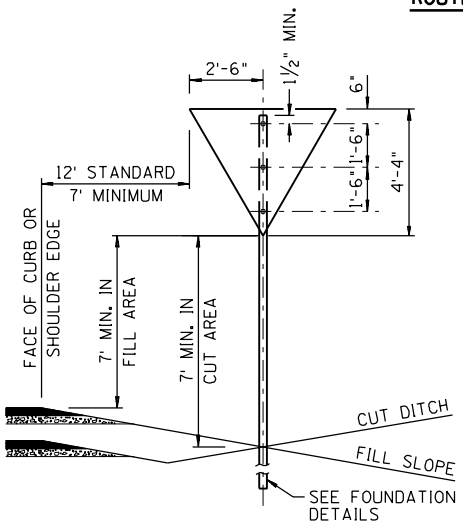

YIELD SIGN

NOTES:

1. SEE FHWA STANDARD HIGHWAY SIGNS BOOKLET FOR PANEL BOLT HOLE SPACING NOT SHOWN.
2. DETERMINE POST SIZE FROM SQUARE TUBE SELECTION CHART.

SHEET 2 OF 4
NOT TO SCALE

DESIGN APPROVED: SIGNATURE ON FILE	ARIZONA DEPARTMENT OF TRANSPORTATION INTERMODAL TRANSPORTATION DIVISION STANDARD DRAWINGS	REV. 2/02
APPROVED FOR DISTRIBUTION	OFFSETS, CLEARANCES AND MOUNTING DETAILS FOR WARNING, REGULATORY AND MARKER SIGNS ON FREEWAYS	DRAWING NO. S-3

NO	DESCRIPTION OF REVISIONS	MADE BY	DATE
1	RE-ISSUE	L. LOPEZ	2/02
2			
3			
4			

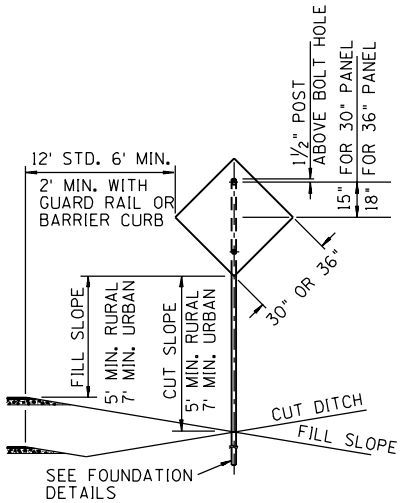

WARNING SIGN

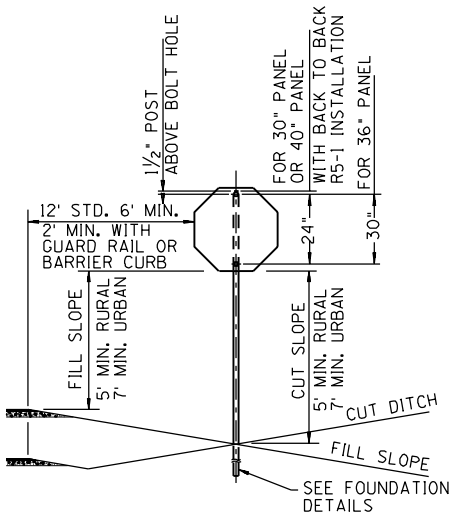

REGULATORY (STOP) SIGN

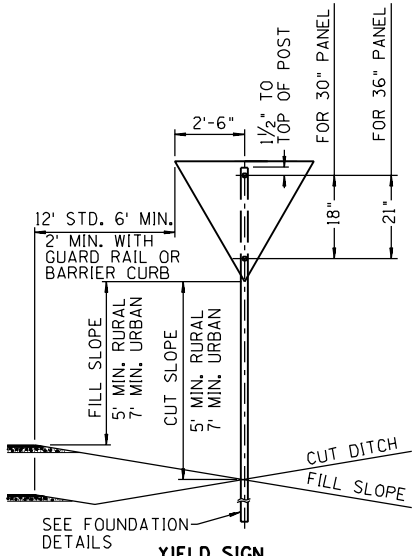

YIELD SIGN

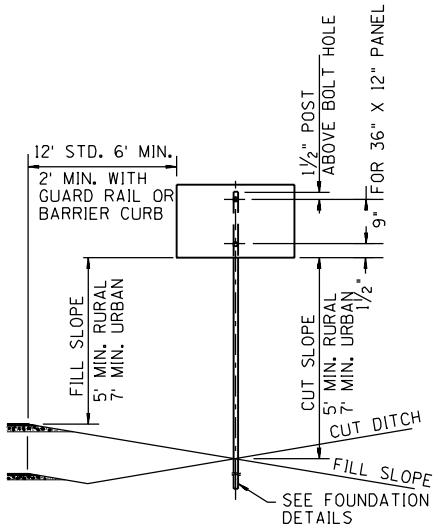

REGULATORY SIGN SINGLE POST

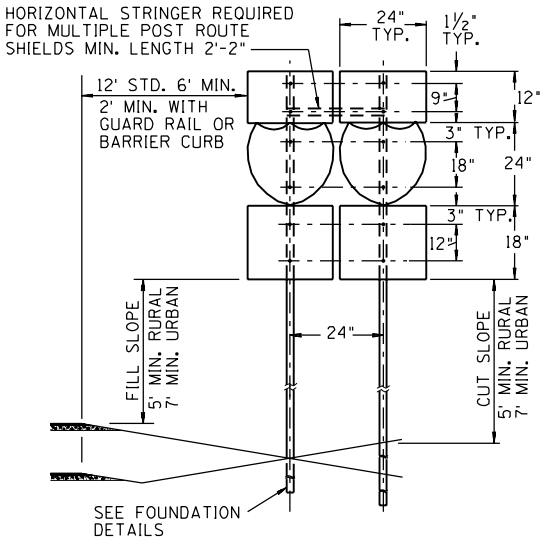

MULTIPLE ROUTE MARKER

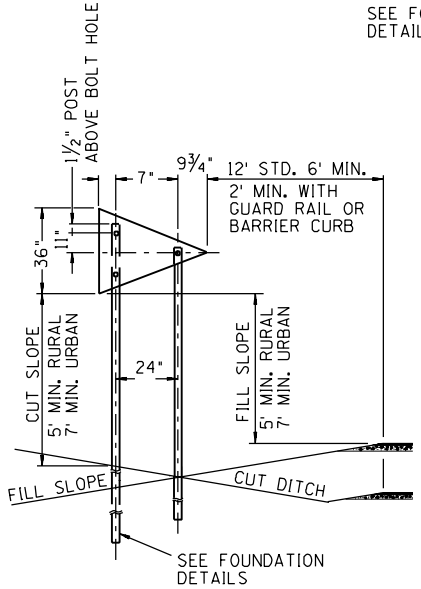

NO PASSING PENNANT

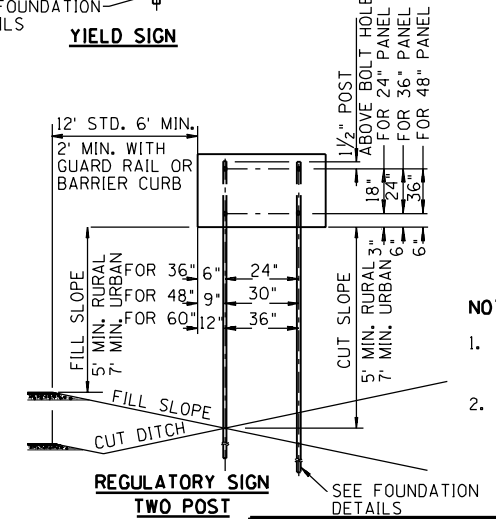

REGULATORY SIGN TWO POST

NOTES:

1. SEE FHWA STANDARD HIGHWAY SIGNS BOOKLET FOR PANEL BOLT HOLE. SPACING NOT SHOWN.
2. DETERMINE POST SIZES FROM SQUARE TUBE OR U-CHANNEL SELECTION CHART.

SHEET 3 OF 4
NOT TO SCALE

DESIGN APPROVED: SIGNATURE ON FILE	ARIZONA DEPARTMENT OF TRANSPORTATION INTERMODAL TRANSPORTATION DIVISION STANDARD DRAWINGS	REV. 2/02
APPROVED FOR DISTRIBUTION	OFFSETS, CLEARANCES AND MOUNTING DETAILS FOR SIGNS ON NON-FREEWAYS RAMPS AND CROSSROADS	DRAWING NO. S-3

NO	DESCRIPTION OF REVISIONS	MADE BY	DATE
1	RE-ISSUE	L. LOPEZ	2/02
2			
3			
4			

GUIDE SIGN POST SPACING
(Not for use with Warning, Regulatory or Marker Panels)

Panel Width	3'	4'	5'	6'	7'	8'	9'	10'
Two Posts Spacing (A)	1'-10"	2'-4"	3'-0"	3'-8"	4'-2"	4'-10"	5'-4"	6'-0"
Bolts to Panel (per Stringer)	—	—	3	3	3	3	4	4
Length of each Stringer	—	—	4'-0"	4'-8"	5'-2"	5'-10"	6'-4"	7'-0"
Three Posts Spacing (B)	—	—	1'-9"	2'-1"	2'-5"	2'-10"	3'-2"	3'-6"
Bolts to Panel (per Stringer)	—	—	3	3	3	4	4	4
Length of each Stringer	—	—	4'-6"	5'-2"	5'-10"	6'-8"	7'-4"	8'-0"

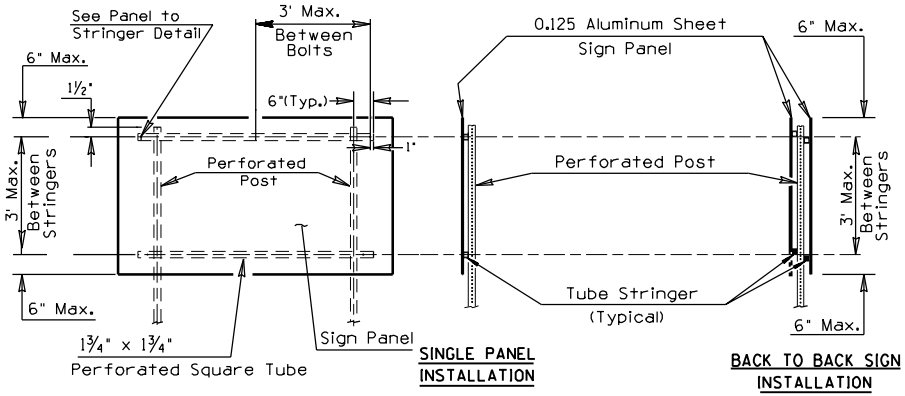

STRINGER DETAILS FOR GUIDE SIGNS
(5 FT. - 10 FT. WIDE)

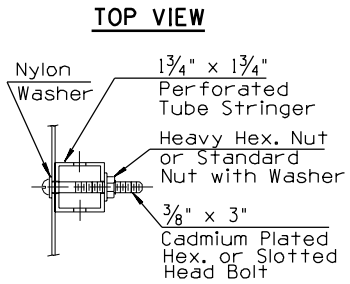

PANEL TO STRINGER OR POST CONNECTION

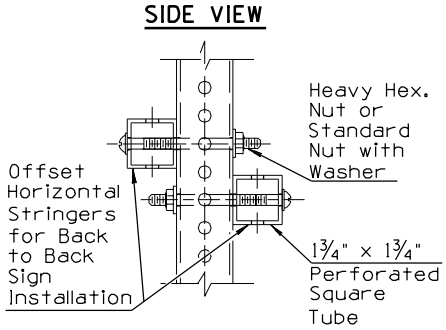

STRINGER TO POST CONNECTION

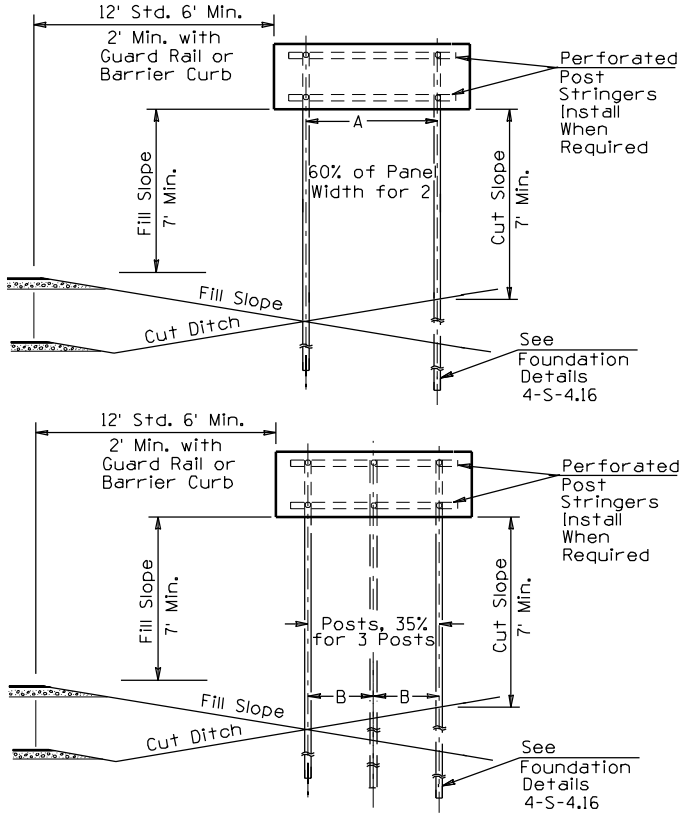

GUIDE SIGN

NOTES:

1. All flat sheet aluminum panels shall be constructed without splices in the aluminum.
2. Reflective sheeting splices are not permitted if minimum dimension of the sign is 4' or less.

SHEET 4 OF 4
NOT TO SCALE

DESIGN APPROVED SIGNATURE ON FILE	ARIZONA DEPARTMENT OF TRANSPORTATION INTERMODAL TRANSPORTATION DIVISION STANDARD DRAWINGS	REV. 2/02
APPROVED FOR DISTRIBUTION	OFFSETS, CLEARANCE, AND MOUNTING DETAILS FOR SQUARE TUBE POSTS	DRAWING NO. S-3

NO	DESCRIPTION OF REVISIONS	MADE BY	DATE
1	RE-ISSUE	L. LOPEZ	2/02
2			
3			
4			

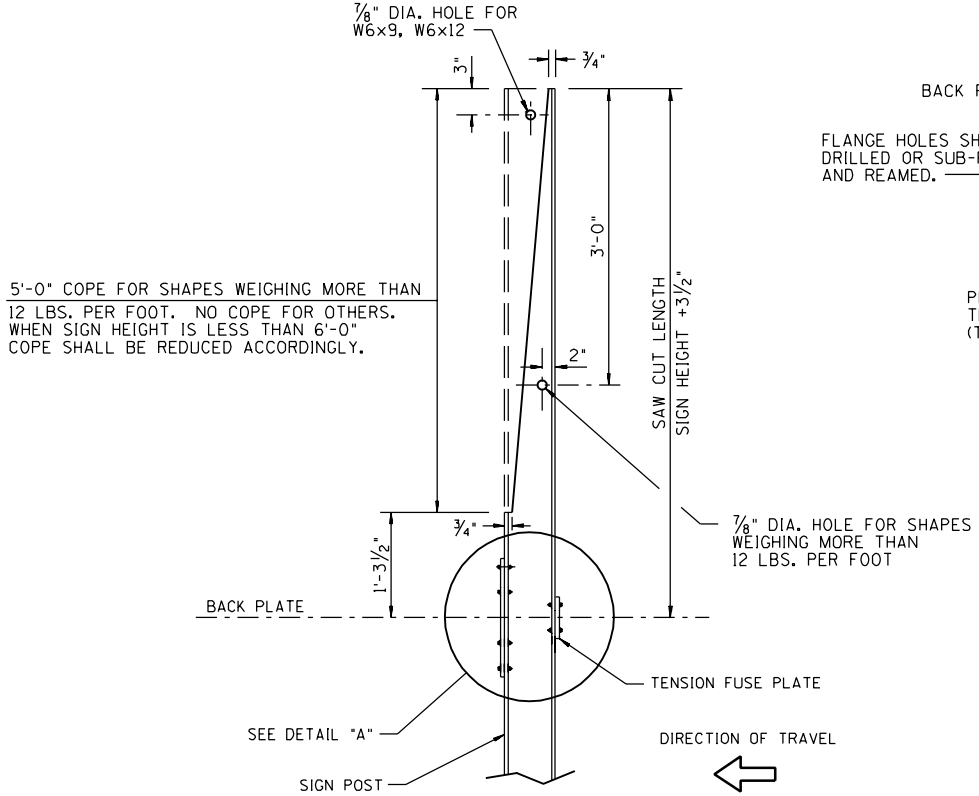

SIDE VIEW

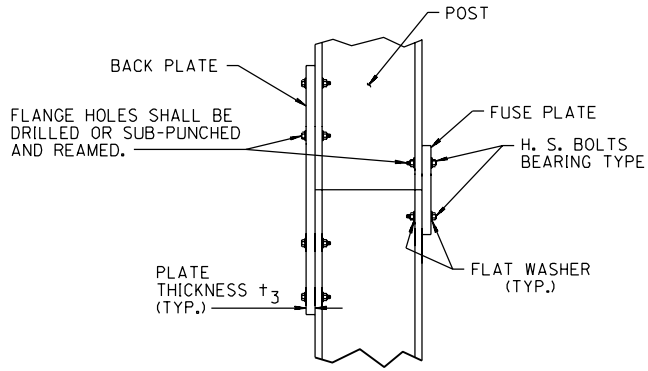

DETAIL "A" HINGE

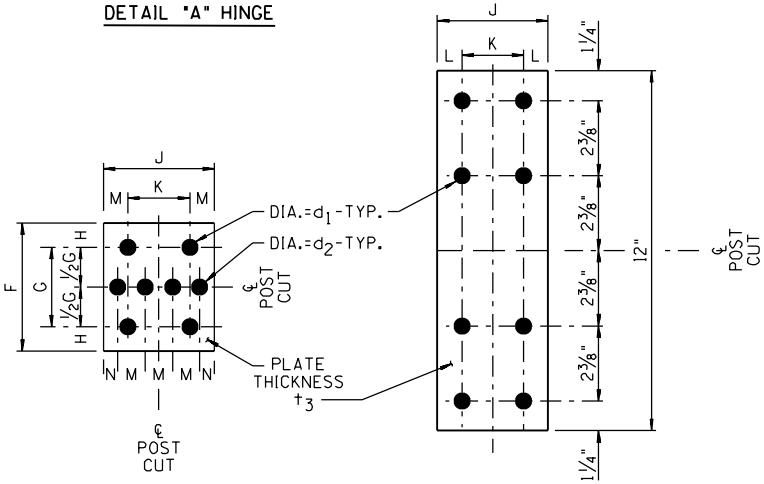

TENSION FUSE PLATE

BACK PLATE

(SEE TABLE FOR DIMENSIONS)

BACK PLATE AND TENSION FUSE PLATE DATA													
POST SIZE	DIMENSION FOR NEW POST SIZES												
	F	G	H	J	K	L	M	N	d_1	d_2	t_3	BOLT DIA.	BOLT LENGTH
W6x9 W6x12	4 3/4"	2 1/2"	1 1/8"	4"	2 1/4"	7/8"	1"	1/2"	9/16"	3/4"	1/4"	1/2"	1 1/2"
W8x18	5"	2 1/2"	1 1/4"	5 1/4"	2 3/4"	1 1/4"	1 1/4"	3/4"	11/16"	1 1/16"	3/8"	5/8"	1 7/8"
W10x22	5 1/2"	2 1/2"	1 1/2"	5 3/4"	2 3/4"	1 1/2"	1 3/8"	13/16"	13/16"	1 1/8"	1/2"	3/4"	2 1/8"
W12x26	5 1/2"	2 1/2"	1 1/2"	6 1/2"	3 1/2"	1 1/2"	1 5/8"	13/16"	13/16"	1 5/16"	1/2"	3/4"	2 1/8"

ALL PLATE HOLES SHALL BE DRILLED. ALL PLATE CUTS SHALL PREFERABLY BE SAW CUTS; FLAME CUTTING WILL BE PERMITTED, PROVIDED ALL EDGES ARE GROUND.

NOT TO SCALE

DESIGN APPROVED

SIGNATURE ON FILE

APPROVED FOR DISTRIBUTION

ARIZONA DEPARTMENT OF TRANSPORTATION
INTERMODAL TRANSPORTATION DIVISION
STANDARD DRAWINGS

REV. 2/02

W SHAPE TENSION FUSE PLATE AND HINGE DETAILS

DRAWING NO. S-4

NO	DESCRIPTION OF REVISIONS	MADE BY	DATE
1			
2			
3			
4			

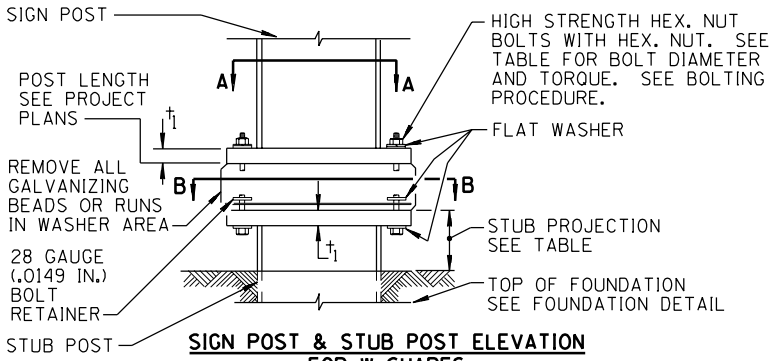

SIGN POST & STUB POST ELEVATION FOR W SHAPES

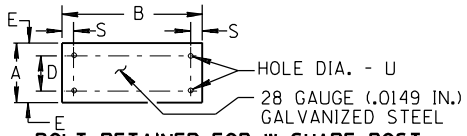

BOLT RETAINER FOR W SHAPE POST

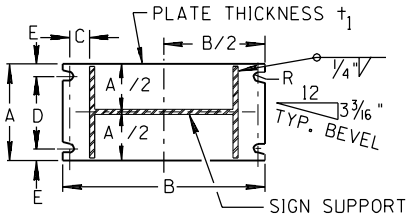

SECTION A-A

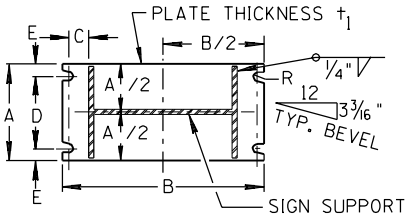

SECTION B-B

SECTIONS SHOWN ARE FOR INSTALLATIONS ON RIGHT SHOULDER AND GORE. PLATE SLOT BEVELS ARE OPPOSITE HAND FROM THAT SHOWN FOR INSTALLATION ON LEFT SHOULDER.

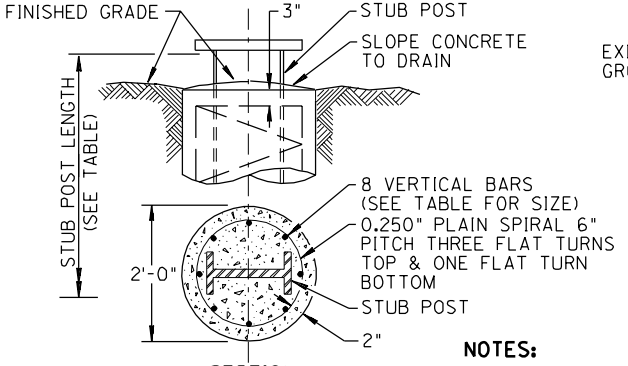

SECTION

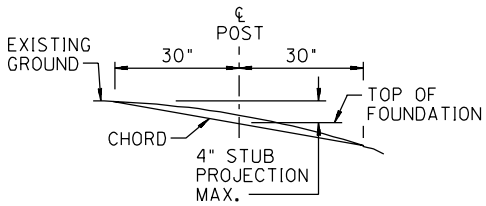

STUB PROJECTION LIMITS

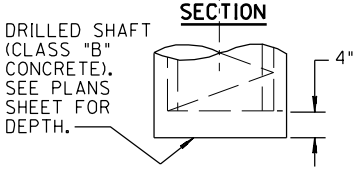

FOUNDATION DETAIL

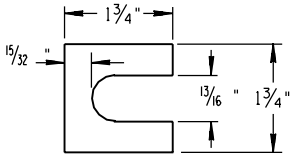

SHIM DETAIL

FURNISH 2 EACH 0.012"± THICK AND 2 EACH 0.032"± THICK SHIMS PER POST. SHIMS SHALL BE FABRICATED FROM BRASS SHIM STOCK OR STRIP CONFORMING TO THE REQUIREMENTS OF A.S.T.M. - B - 36. FOUR SHIMS PER BOLT MAXIMUM.

NOTES:

1. ALL STUB POSTS SHALL BE GALVINZED A MINIMUM OF 12" DOWN FROM THE BASE OF PLATE.
2. WHERE SOLID ROCK IS ENCOUNTERED, FOUNDATION SHALL BE PLAN DEPTH OR EXTENDED 2' MINIMUM INTO THE ROCK.
3. ALL PLATE HOLES SHALL BE DRILLED. ALL PLATE CUTS SHALL PREFERABLY BE SAWCUTS; FLAME CUTTING WILL BE PERMITTED, PROVIDED ALL EDGES ARE GROUND SMOOTH.

PROCEDURE FOR BOLTING & ASSEMBLY OF BASE CONNECTION

1. ASSEMBLE POST TO STUB WITH BOLTS AND WITH ONE FLAT WASHER ON EACH BOLT BETWEEN PLATES.
2. SHIM AS REQUIRED TO PLUMB POST. (4 SHIMS PER BOLT MAXIMUM)
3. TIGHTEN ALL BOLTS THE MAXIMUM POSSIBLE WITH 12" TO 15" WRENCH TO BED WASHERS AND SHIMS AND TO CLEAN BOLT THREADS, THEN LOOSEN EACH BOLT IN TURN AND RETIGHTEN BOLTS IN A SYSTEMATIC ORDER TO THE PRESCRIBED TORQUE (SEE TABLE). TIGHTEN THE BOLTS IN THE BASE CONNECTION TO THE TORQUE SHOWN. DO NOT OVERTIGHTEN.
4. DO NOT BURR THREADS AT JUNCTION.

BASE CONNECTION DATA TABLE

POST SIZE	BOLT SIZE AND TORQUE	DIMENSIONS FOR POST SIZES								
		A	B	C	D	E	R	t_1	S	U
W6x9	5/8" DIA. x 3" TORQUE = 19 TO 29 FOOT-LBS	5 3/4"	9 7/8"	1 1/4"	2 3/4"	1 1/2"	11/32"	3/4"	3/4"	11/16"
W6x12		5 3/4"	10"	1 1/4"	2 3/4"	1 1/2"	11/32"	3/4"	3/4"	11/16"
W8x18		5 3/4"	12 1/8"	1 1/4"	2 3/4"	1 1/2"	11/32"	3/4"	3/4"	11/16"
W10x22	3/4" DIA. x 3 1/2" TORQUE = 31 TO 46 FOOT-LBS	6 1/2"	14 5/8"	1 3/8"	3 1/2"	1 1/2"	13/32"	1"	7/8"	13/16"

FOUNDATION DATA				APPROXIMATE QUANTITIES PER LIN. FT.		FOUNDATION DEPTH (SEE NOTE 2 ALSO)	
						SLOPES ≤ 4:1	SLOPES > 4:1
POST SIZE	STUB LENGTH	STUB PROJECTION	VERTICAL BAR SIZE	CONC. CU. YD.	STEEL LBS.	TWO OR THREE POSTS	TWO OR THREE POSTS
W6x9	2'-0"	3"	#5	0.116	8.9	6'-0"	6'-0"
W6x12	2'-0"	3"	#5	0.116	8.9		
W8x18	2'-6"	3"	#7	0.116	16.3	7'-0"	7'-6"
W10x22	3'-0"	2 1/2"	#9	0.116	26.5	8'-0"	8'-6"

NOT TO SCALE

DESIGN APPROVED: SIGNATURE ON FILE

APPROVED FOR DISTRIBUTION

ARIZONA DEPARTMENT OF TRANSPORTATION
INTERMODAL TRANSPORTATION DIVISION
STANDARD DRAWINGS

REV. 03/02

BREAKAWAY POST DETAILS FOR W SHAPE GUIDE SIGNS

DRAWING NO. S-5

NO	DESCRIPTION OF REVISIONS	MADE BY	DATE
1	RE-ISSUE	L. LOPEZ	2/02
2			
3			
4			

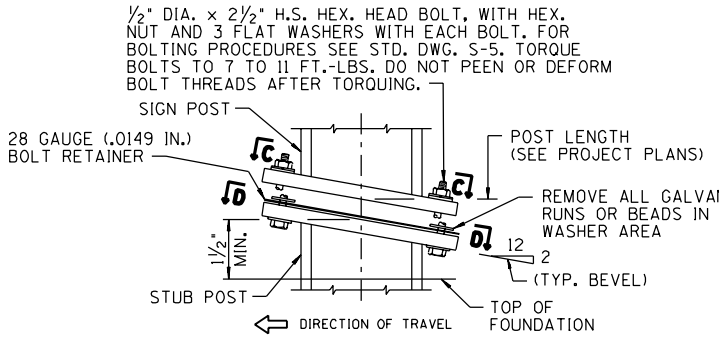

SIGN POST AND STUB POST ELEVATION

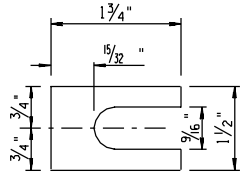

SHIM DETAIL

FURNISH 2 EACH 0.012"± THICK AND 2 EACH 0.032"± THICK SHIMS PER POST. SHIMS SHALL BE FABRICATED FROM BRASS SHIM STOCK OR STRIP CONFORMING TO THE REQUIREMENTS OF A.S.T.M. B36/B36M-95

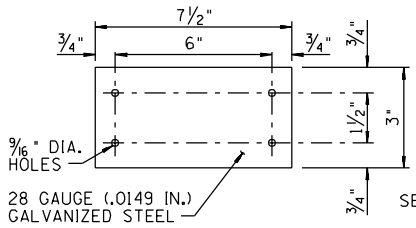

BOLT RETAINER

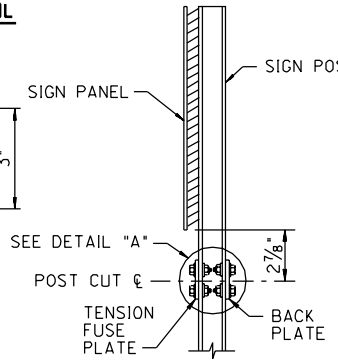

SIDE VIEW OF POST

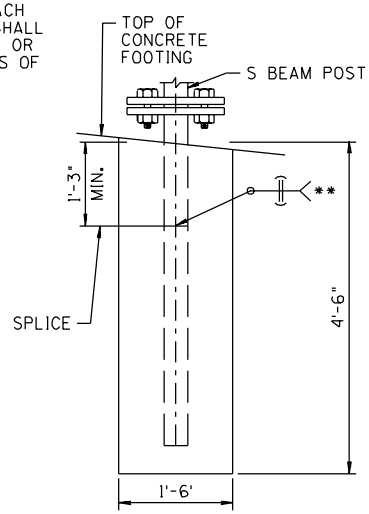

PERMISSIBLE SHOP SPLICE

** ALL SHOP SPLICES SHALL BE APPROVED BY THE ENGINEER. ALL WELDING SHALL BE IN ACCORDANCE WITH AWS-1.1 LATEST EDITION.

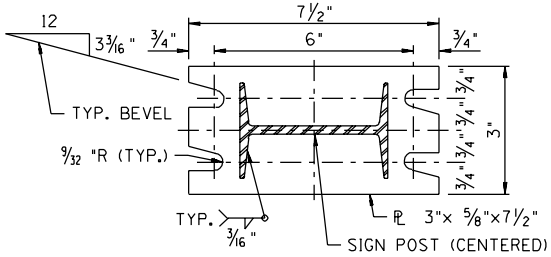

SECTION C-C

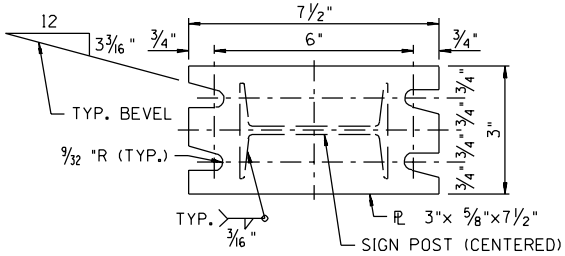

SECTION D-D

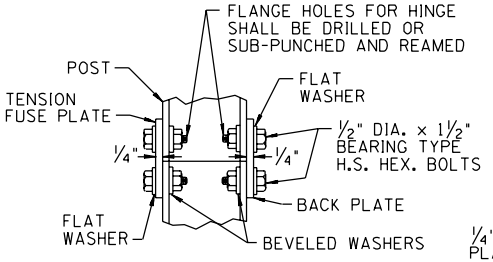

DETAIL "A" HINGE

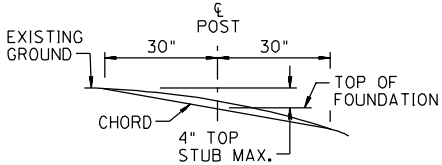

STUB PROJECTION LIMITS

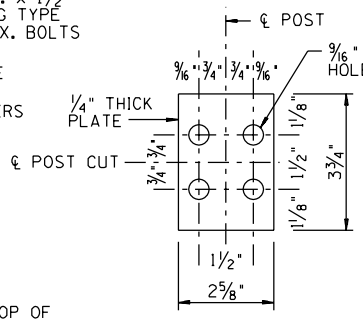

BACK PLATE
(S4x7.7)

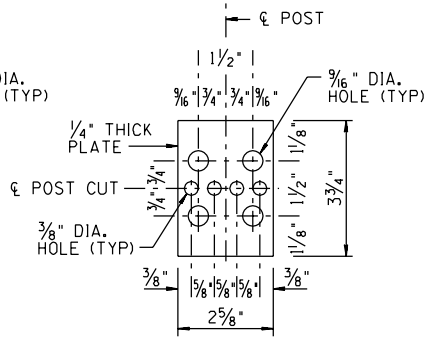

TENSION FUSE PLATE

NOTES:

1. SECTIONS SHOWN ARE FOR INSTALLATIONS ON RIGHT SHOULDER AND IN GORE. PLATE SLOT BEVELS ARE OPPOSITE HAND FROM THAT SHOWN FOR INSTALLATIONS ON LEFT SHOULDER.
2. ALL PLATE HOLES SHALL BE DRILLED. ALL PLATE CUTS SHALL PREFERABLY BE SAW CUTS; FLAME CUTTING WILL BE PERMITTED PROVIDED ALL EDGES ARE GROUND.

NOT TO SCALE

DESIGN APPROVED: SIGNATURE ON FILE	ARIZONA DEPARTMENT OF TRANSPORTATION INTERMODAL TRANSPORTATION DIVISION STANDARD DRAWINGS	REV. 2/02
APPROVED FOR DISTRIBUTION	BREAKAWAY POST DETAILS S4x7.7	DRAWING NO. S-6

NO	DESCRIPTION OF REVISIONS	MADE BY	DATE
1	RE-ISSUE	L. LOPEZ	2/02
2	ADDED CALL OUT TO "REAR ELEVATION", REVISED NOTE	L. LOPEZ	6/06
3			
4			

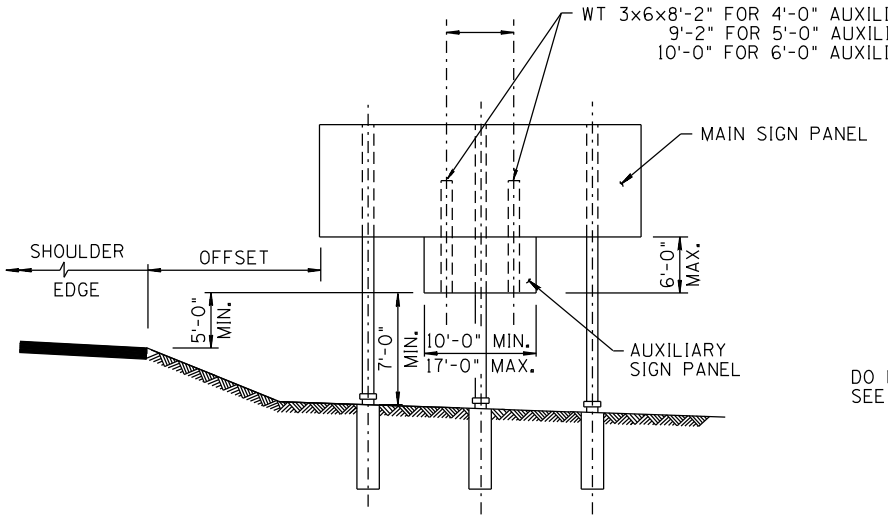

THREE POSTS SIGN & TWO POST SIGN

WITH SPACING GREATER THAN WIDTH OF AUXILIARY SIGNS MINUS 1'-0"

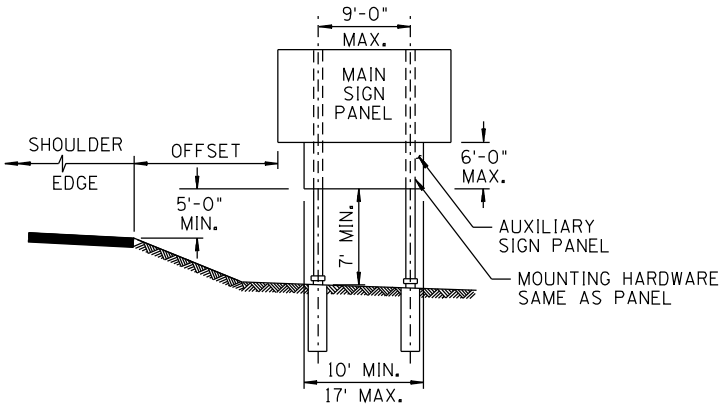

TWO POSTS SIGN

POST SPACING LESS THAN WIDTH OF AUXILIARY SIGNS MINUS 1'-0"

WT 3x6 SHALL BE A.S.T.M. A36/A36M-00 STEEL GALVANIZED TO CONFORM TO THE REQUIREMENTS OF A.S.T.M. A123/A123M-97a(1999)e1

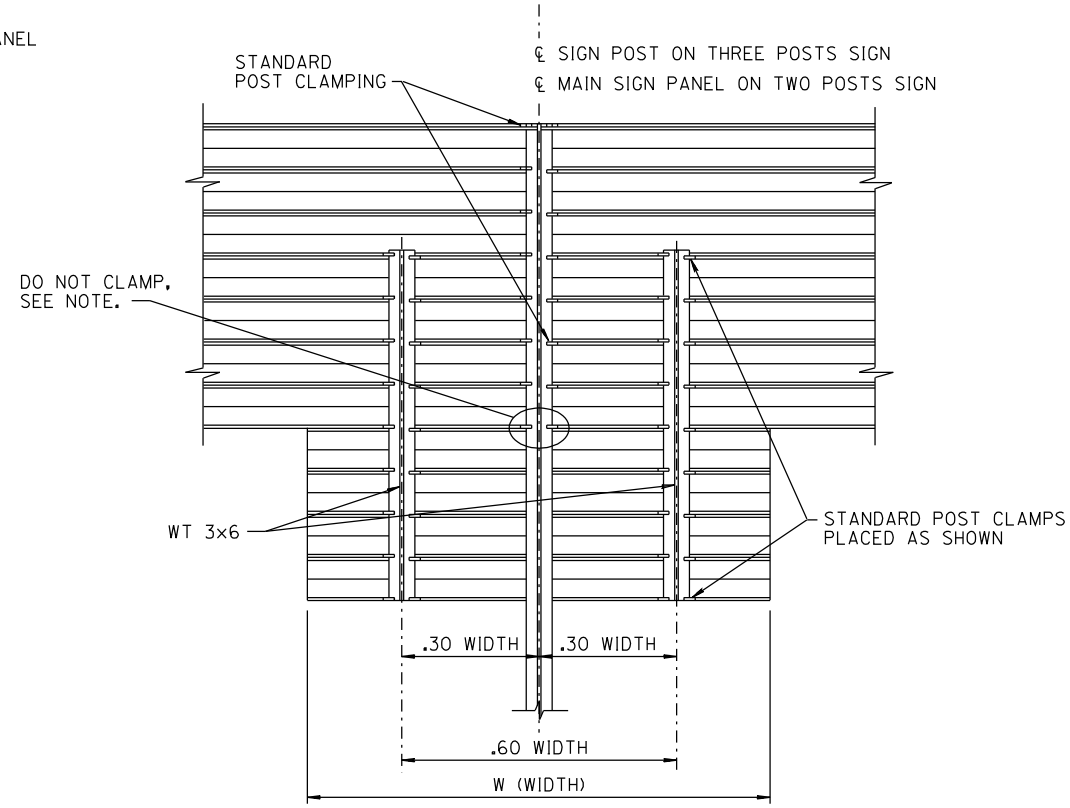

REAR ELEVATION

NOTE:

DO NOT CLAMP AUXILIARY SIGN TO THE MIDDLE POST ON THREE POST SIGNS.

NOT TO SCALE

DESIGN APPROVED SIGNATURE ON FILE	ARIZONA DEPARTMENT OF TRANSPORTATION INTERMODAL TRANSPORTATION DIVISION STANDARD DRAWINGS	REV. 6/06
APPROVED FOR DISTRIBUTION	AUXILIARY SIGN INSTALLATION DETAILS	DRAWING NO. S-7

NO	DESCRIPTION OF REVISIONS	MADE BY	DATE
1	RE-ISSUE	L. LOPEZ	2/02
2			
3			
4			

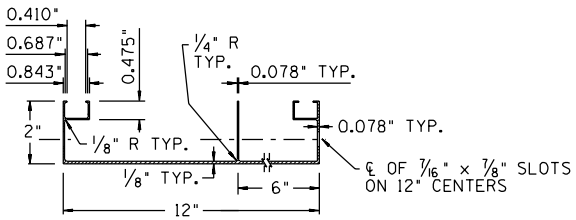

WT/LIN. FOOT 2.69 LBS. MINIMUM
12" EXTRUSION

SECTION VIEW OF EXTRUSION

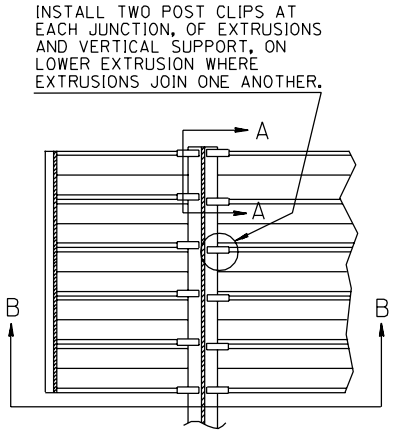

BACK ELEVATION OF SIGN PANEL

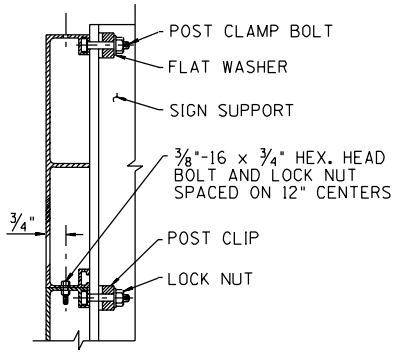

SECTION "A-A"
INSTALLATION DETAIL

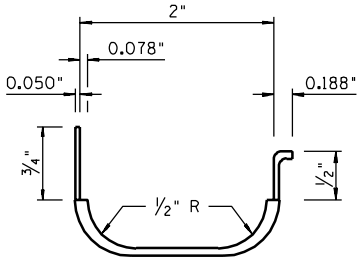

WT./LIN. FOOT = 0.276 LBS.

SIDE TRIM MOLDING DETAIL

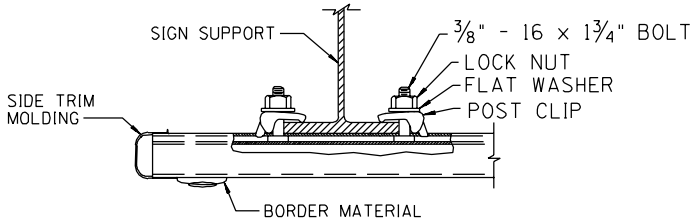

SECTION B-B
INSTALLATION DETAIL

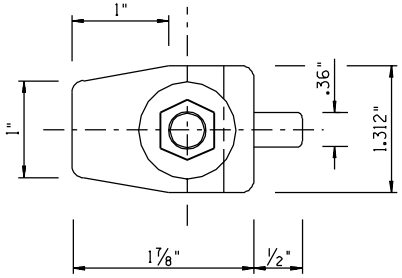

PLAN

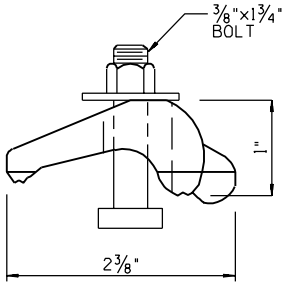

PLAN

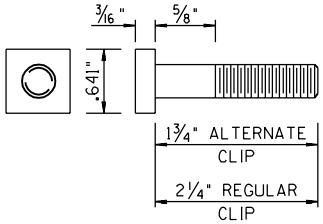

POST CLIP BOLT DETAIL

NOTE:

ALL BOLTS, WASHERS AND LOCK NUTS SHALL BE STAINLESS STEEL.

SHEET 1 OF 4
NOT TO SCALE

DESIGN APPROVED: SIGNATURE ON FILE	ARIZONA DEPARTMENT OF TRANSPORTATION INTERMODAL TRANSPORTATION DIVISION STANDARD DRAWINGS	REV. 2/02
APPROVED FOR DISTRIBUTION	ALUMINUM EXTRUSION SIGN PANEL DETAILS	DRAWING NO. S-8

NO	DESCRIPTION OF REVISIONS	MADE BY	DATE
1	RE-ISSUE	L. LOPEZ	2/02
2			
3			
4			

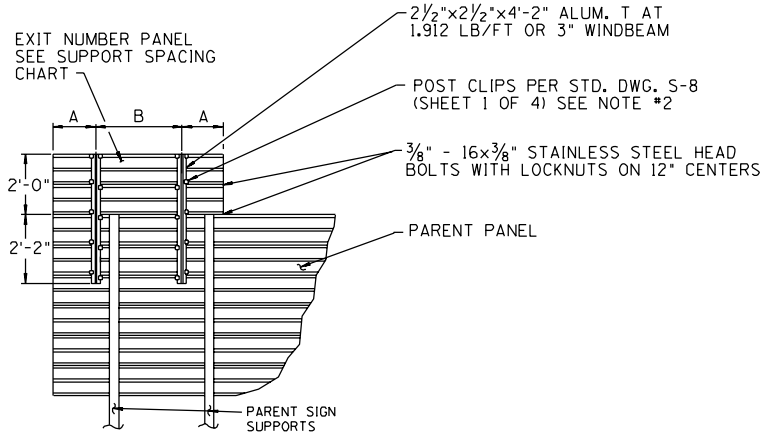

ALUMINUM EXTRUSION PANEL

REAR ELEVATION

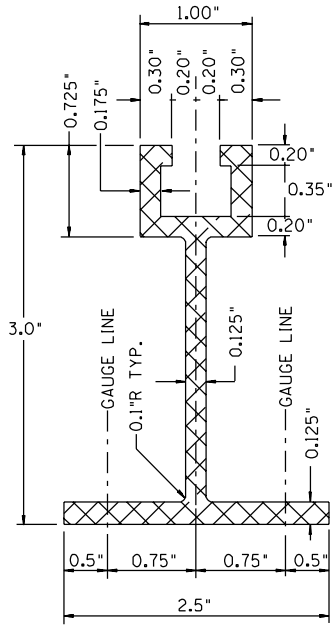

WINDBEAM CROSS SECTION

EXIT NUMBER PANEL SUPPORT SPACING CHART		
PANEL WIDTH	DIMENSION A	DIMENSION B
7'	1'-0"	5'-0"
8'	1'-6"	5'-0"
9'	2'-0"	5'-0"
11'	2'-6"	6'-0"
14'	2'-6"	9'-0"
15'	3'-0"	9'-0"

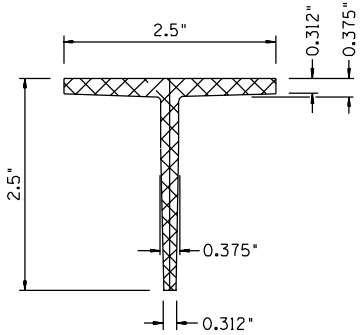

ALUMINUM T SECTION

NOTES:

1. THE EXIT NUMBER PANEL SHALL BE MOUNTED WITH TWO (2) UPRIGHTS SO THAT ITS RIGHT EDGE IS EVEN WITH THE RIGHT EDGE OF THE PARENT SIGN OR REVERSE FOR LEFT HAND EXITS.
2. INSTALL TWO POST CLIPS AT EACH VERTICAL SUPPORT, ONE ON UPPER EXTRUSION AND ONE ON LOWER EXTRUSION WHERE EXTRUSIONS JOIN ONE ANOTHER.
3. THE EXIT PANEL SUPPORT MAY BE MOVED 6" IF IT CONFLICTS WITH THE PARENT SIGN SUPPORT.
4. ALUMINUM SUPPORTS SHALL BE 6061-T6.

SHEET 2 OF 4
NOT TO SCALE

DESIGN APPROVED SIGNATURE ON FILE	ARIZONA DEPARTMENT OF TRANSPORTATION INTERMODAL TRANSPORTATION DIVISION STANDARD DRAWINGS	REV. 2/02
APPROVED FOR DISTRIBUTION	ALUMINUM EXTRUSION EXIT NUMBER PANEL DETAIL	DRAWING NO. S-8

NO	DESCRIPTION OF REVISIONS	MADE BY	DATE
1	RE-ISSUE	L. LOPEZ	2/02
2			
3			
4			

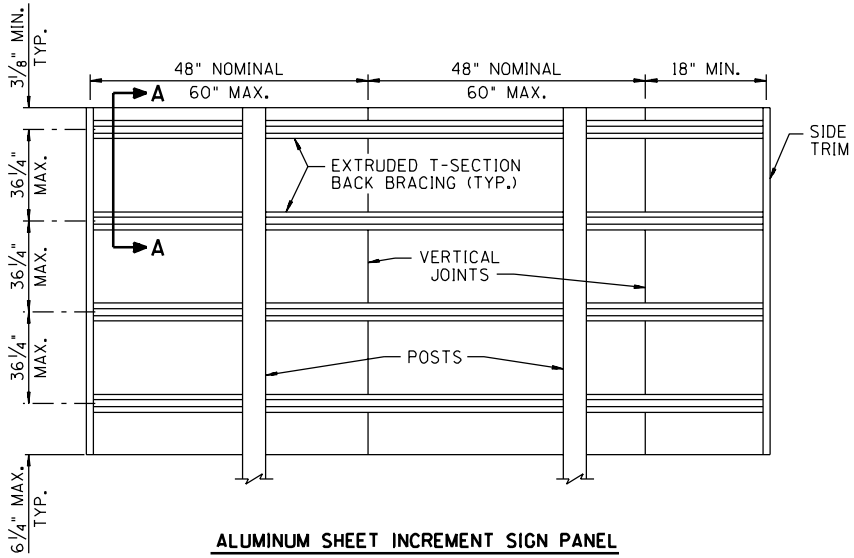

ALUMINUM SHEET INCREMENT SIGN PANEL

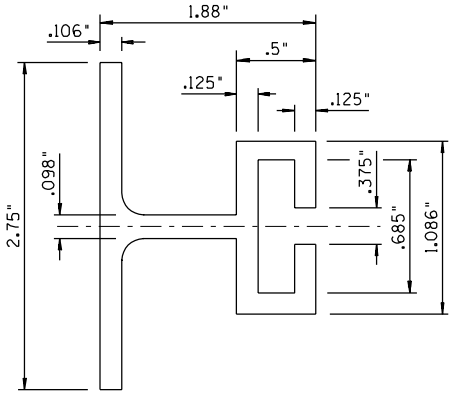

EXTRUDED T-SECTION BACK BRACING

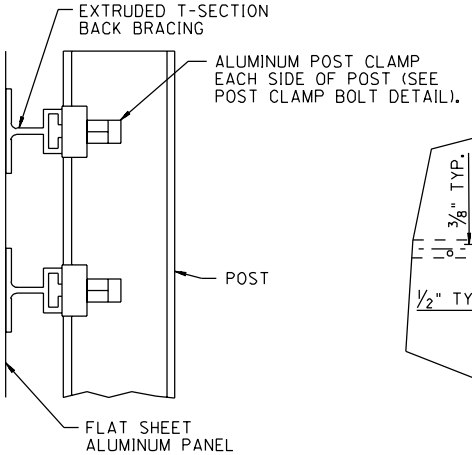

SECTION A-A

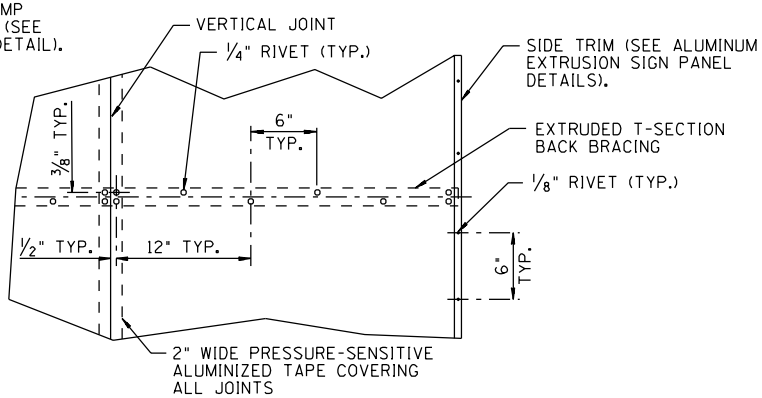

RIVET SPACING DETAIL

NOTES:

1. ALL DIMENSIONS ARE IN INCHES, EXCEPT AS NOTED.
2. SIGNS LESS THAN 48" HIGH AND 144" WIDE SHALL BE MADE OF A SINGLE SHEET OF ALUMINUM.
3. SIGNS LESS THAN 144" HIGH SHALL HAVE NO HORIZONTAL JOINTS.
4. SIGNS OVER 144" HIGH MAY HAVE HORIZONTAL AND VERTICAL JOINTS; HOWEVER, NO SHEET SHALL BE LESS THAN 18" WIDE OR 18" HIGH.
5. ALL HORIZONTAL JOINTS SHALL OCCUR AT AN EXTRUDED T-SECTION.
6. ALL SCREWS, BOLTS, AND LOCKWASHER SHALLS BE OF ALUMINUM ALLOY, STAINLESS STEEL, OR CADMIUM PLATED STEEL.
7. ONLY ALUMINUM RIVETS SHALL BE USED.

SHEET 3 OF 4
NOT TO SCALE

DESIGN APPROVED	ARIZONA DEPARTMENT OF TRANSPORTATION INTERMODAL TRANSPORTATION DIVISION STANDARD DRAWINGS	REV. 2/02
APPROVED FOR DISTRIBUTION	ALUMINUM EXTRUSION PANEL INSTALLATION DETAIL	DRAWING NO. S-8

SIGNATURE ON FILE

NO	DESCRIPTION OF REVISIONS	MADE BY	DATE
1	RE-ISSUE	L. LOPEZ	2/02
2			
3			
4			

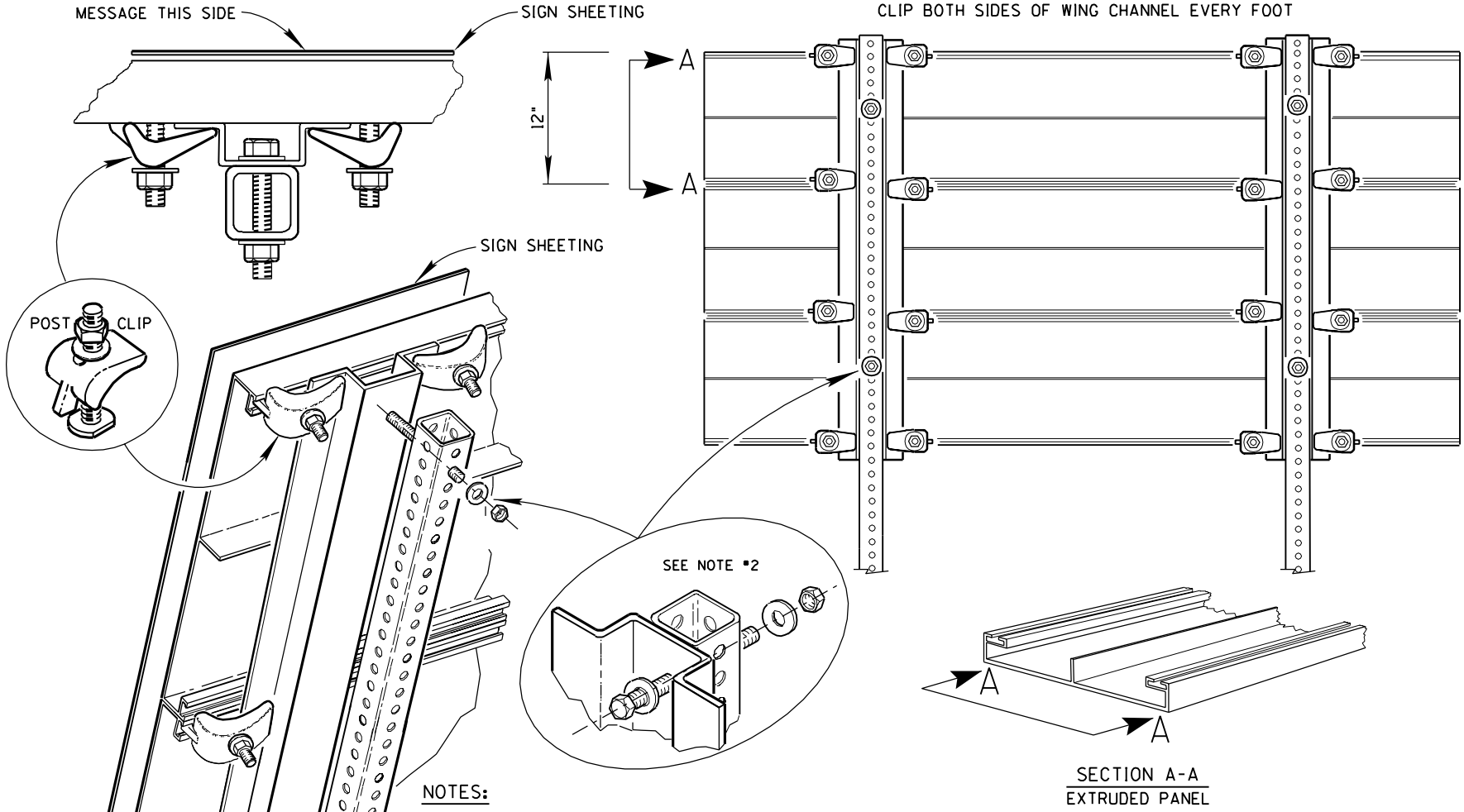

NOTES:

1. INSTALL TWO POST CLIPS AT EACH JUNCTION OF EXTRUSIONS AND VERTICAL SUPPORTS; ONE ON EACH LOWER EXTRUSION AND ONE ON EACH UPPER EXTRUSION WHERE EXTRUSIONS JOIN ONE ANOTHER.
2. INSTALL ⅜" x 3½", CAD PLATED HEX HEAD, BOLT WITH FLAT AND LOCK WASHER UNDER NUT AND FLAT WASHER UNDER HEAD.

SHEET 4 OF 4
NOT TO SCALE

DESIGN APPROVED: SIGNATURE ON FILE	ARIZONA DEPARTMENT OF TRANSPORTATION INTERMODAL TRANSPORTATION DIVISION STANDARD DRAWINGS	REV. 2/02
APPROVED FOR DISTRIBUTION	ALUMINUM EXTRUSION SIGN INSTALLATION DETAIL TO PERFORATED POSTS	DRAWING NO. S-8