STATE OF ARIZONA
DEPARTMENT OF TRANSPORTATION

DIVISION OF HIGHWAYS
STRUCTURES SECTION

STANDARD DRAWINGS

AUGUST 1976

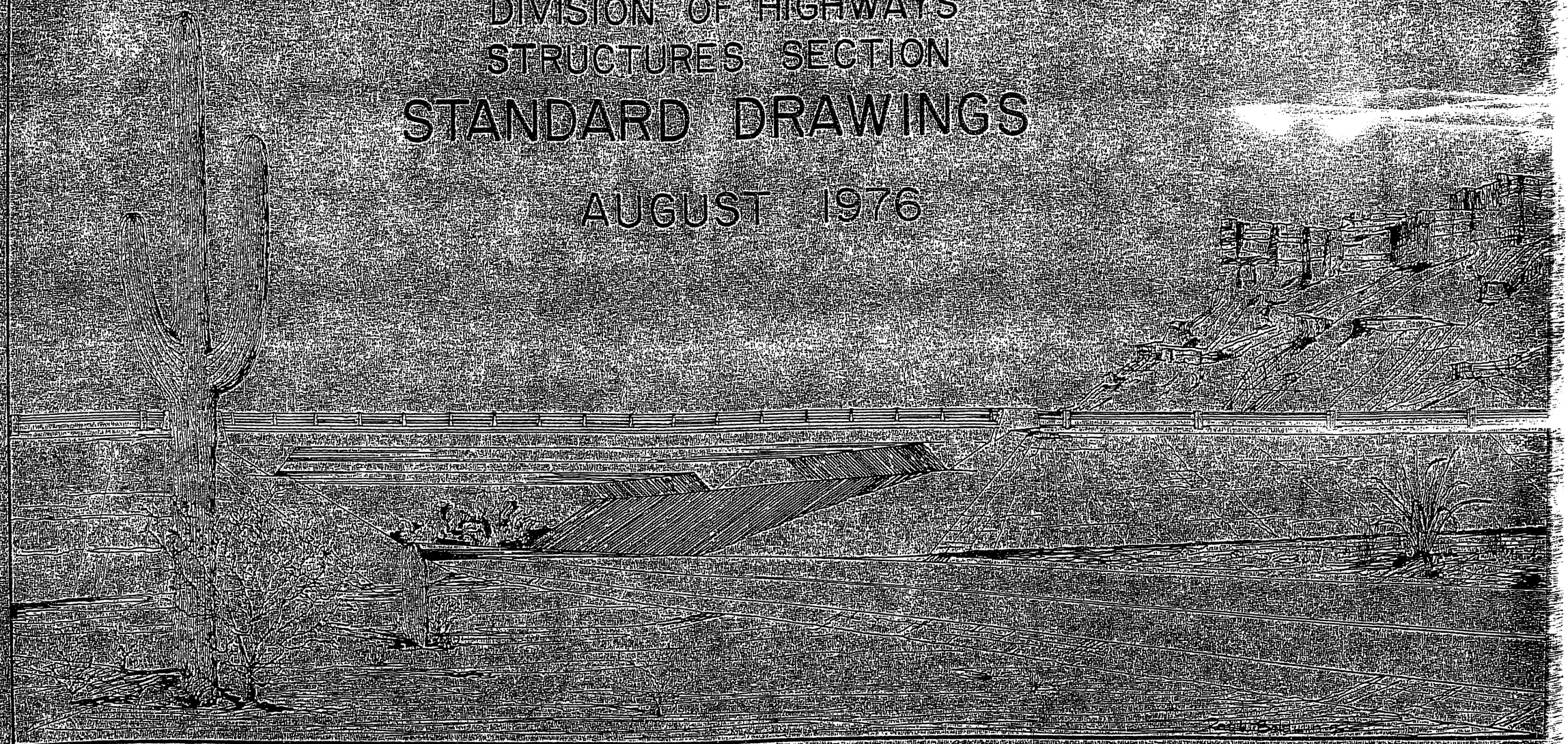

	Description	Page	STD. No.
Face Sheet	Face sheet for 1987 Bridge Standards	1	
Index 1 of 2	index for 1987 Bridge Standards	2	
Index 2 of 2	index for 1987 Bridge Standards	3	
TOC	Table of Contents - Structure Section	4	
	REINFORCED CONCRETE BOX CULVERTS		
B-1.01	Miscellaneous Details for Standard Box Culverts	5	CM-1
B-2.01	Single Barrel Box Culvert	6	CB-1
B02.02	Double Barrel Box Culvert	7	CB-2
B-2.03	Double Barrel Box Culvert	8	CB-2A
B-2.04	Triple Barrel Box Culvert	9	CB-3
B-2.05	Triple Barrel Box Culvert	10	CB-3A
B-2.06	Four Barrel Box Culvert	11	CB-4
B-2.07	Four Barrel Box Culvert	12	CB-4A
B-2.08	Five Barrel Box Culvert	13	CB-5
B-2.09	Five Barrel Box Culvert	14	CB-5A
B-2.10	Six Barrel Box Culvert	15	CB-6
B-2.11	Six Barrel Box Culvert	16	CB-6A
B-3.01	16' x 14' Equipment Pass-Concrete Box	17	CEP-1
B-4.01	Inlet Wings, Right Angle Culvert 2:1 Slope, Height 3' to 7'	18	CW2-1
B-4.02	Inlet Wings, Right Angle Culvert 2:1 Slope, Height 8' to 12'	19	CW2-2
B-4.03	Outlet Wings, Right Angle Culvert 2:1 Slope, Height 3' to 7'	20	CW2-3
B-4.04	Outlet Wings, Right Angle Culvert 2:1 Slope, Height 8' to 12'	21	CW2-4
B-4.05	Inlet or Outlet Wings 30° Skew Culvert 2:1 Slope Height 3' to 7'	22	CW2-5
B-4.06	Inlet or Outlet Wings 30° Skew Culvert 2:1 Slope Height 8' to 12'	23	CW2-6
B-4.07	Inlet or Outlet Wings 45° Skew Culvert 2:1 Slope Height 3' to 7'	24	CW2-7
B-4.08	Inlet or Outlet Wings 45° Skew Culvert 2:1 Slope Height 8' to 12'	25	CW2-8
B-5.01	Inlet Wings, Right Angle Culvert 6:1 Slope, Height 3' to 7'	26	CW6-1
B-5.02	Inlet Wings, Right Angle Culvert 6:1 Slope, Height 8' to 12'	27	CW6-2
B-5.03	Outlet Wings, Right Angle Culvert 6:1 Slope, Height 3' to 7'	28	CW6-3
B-5.04	Outlet Wings, Right Angle Culvert 6:1 Slope, Height 8' to 12'	29	CW6-4
B-5.05	Inlet or Outlet Wings 30° Skew Culvert 6:1 Slope Height 3' to 7'	30	CW6-5
B-5.06	Inlet or Outlet Wings 30° Skew Culvert 6:1 Slope Height 8' to 12'	31	CW6-6
B-5.07	Inlet or Outlet Wings 45° Skew Culvert 6:1 Slope Height 3' to 7'	32	CW6-7
B-5.08	Inlet or Outlet Wings 45° Skew Culvert 6:1 Slope Height 8' to 12'	33	CW6-8
B-6.01	Outlet Aprons For CW2 and CW6 Wings	34	CWA-1
B-6.02	Outlet Aprons For CW2 and CW6 Wings	35	CWA-2
B-7.01	Headwall Quantities For CW2 and CW6 Wings	36	CWQ-1
B-8.01	Inlet or Outlet Level Wings, Height 3' to 7'	37	CWL-1

	Description	Page	STD. No.
B-8.02	Inlet or Outlet Level Wings, Height 8' to 12'	38	CWL-2
	CONTINUOUS SPAN CONCRETE SLAB BRIDGES	Page	STD. No.
B-9.01	Continuous Span Slab, HS20-44 Loading	39	CS-20
B-9.02	Continuous Span Slab With Hinge, HS20-44 Loading	40	CSH-20
B-9.03	Continuous Span Slab, Interstate Loading	41	CS-20I
B-9.04	Continuous Span Slab with Hinge, Interstate Loading	42	CSH-201
B-10.01	Slab Hinge Joint & Hinge Span Reinforcing Details	43	CSH-M
	REINFORCED CONCRETE HEADWALLS FOR PIPE CULVERTS		
B-11.01	Pipe Culvert Headwalls- Miscellaneous Details	44	PH-1
B-12.01	Inlet Headwall, Right Angle Pipe Culvert	45	PH-2
B-12.02	Outlet Headwall, Right Angle Pipe Culvert	46	PH-3
B-12.03	Inlet and Outlet Headwalls, Right Angle Pipe Culvert, 2:1 Slope	47	PH-4
B-12.04	Inlet and Outlet Headwalls, Right Angle Pipe Culvert, 4:1 Slope	48	PH-5
B-12.05	Inlet and Outlet Headwalls, Right Angle Pipe Culvert, 6:1 Slope	49	PH-6
B-13.01	Inlet and Outlet Headwalls, 15° Skew Pipe Culvert	50	PH-7
B-13.02	Inlet and Outlet Headwalls, 15° Skew Pipe Culvert, 2:1 Slope	51	PH-8
B-13.03	Inlet and Outlet Headwalls, 15° Skew Pipe Culvert, 4:1 Slope	52	PH-9
B-13.04	Inlet and Outlet Headwalls, 15° Skew Pipe Culvert, 6:1 Slope	53	PH-10
B-14.01	Inlet and Outlet Headwalls, 30° Skew Pipe Culvert	54	PH-11
B-14.02	Inlet and Outlet Headwalls, 30° Skew Pipe Culvert, 2:1 Slope	55	PH-12
B-14.03	Inlet and Outlet Headwalls, 30° Skew Pipe Culvert, 4:1 Slope	56	PH-13
B-14.04	Inlet and Outlet Headwalls, 30° Skew Pipe Culvert, 6:1 Slope	57	PH-14
B-15.01	Inlet and Outlet Headwalls, 45° Skew Pipe Culvert	58	PH-15
B-15.02	Inlet and Outlet Headwalls, 45° Skew Pipe Culvert, 2:1 Slope	59	PH16
B-15.03	Inlet and Outlet Headwalls, 45° Skew Pipe Culvert, 4:1 Slope	60	PH-17
B-15.04	Inlet and Outlet Headwalls, 45° Skew Pipe Culvert, 6:1 Slope	61	PH-18
B-16.01	Multipipe Headwalls	62	PH-19
B-17.01	Outlet Aprons	63	PH-20
B-17.02	Outlet Apron Steel List 2:1 Slope	64	PH-21
B-17.03	Outlet Apron Steel List 4:1 Slope	65	PH-22
B-17.04	Outlet Apron Steel List 6:1 Slope	66	PH-23
	RETAINING WALLS		
B-18.01	Cantilever Retaining Wall Details	67	RW-1
B-18.02	Catilever Retaining Walls on Spread Footings	68	RW-2
B-18.03	Cantilever Retaining Walls on Steel Piles	69	RW-3
B-18.04	Cantilever Retaining Walls on Concrete Piles	70	RW-4

MISCELLANEOUS STANDARDS

B-19.01	*Miscellaneous Details for Bridges*	*71*	*BM-1*
B-20.01	*Concrete Pile Details, Precast and Cast-in-Place Piles*	*72*	*CP-1*
B-20.02	*Concrete Pile Details, Prestressed Piles*	*73*	*CP-2*
B-21.01	*Guard Rail End Shoe-Dado Connection*	*74*	*GD-1*
B-22.01	*Single Handrail*	*75*	*H-1-1*
B-22.02	*Double Handrail*	*76*	*H-2-1*
B-22.03	*Triple Hanrail*	*77*	*H-3-1*
B-23.01	*Rail Bank Protection for Bridges*	*78*	*RB-2*
B-24.01	*Roadway Joint-Steel*	*79*	*RJ-3*
B-24.02	*Roadway Joint Polychloroprene*	*80*	*RJ-4*

TABLE OF CONTENTS

STANDARD NUMBER	DESCRIPTION	DRAWING NUMBER
	REINFORCED CONCRETE BOX CULVERTS	
CM-1	Miscellaneous Details For Standard Box Culverts	B-1.01
CB-1	Single Barrel Box Culvert	B-2.01
CB-2	Double Barrel Box Culvert	B-2.02
CB-2A	Double Barrel Box Culvert	B-2.03
CB-3	Triple Barrel Box Culvert	B-2.04
CB-3A	Triple Barrel Box Culvert	B-2.05
CB-4	Four Barrel Box Culvert	B-2.06
CB-4A	Four Barrel Box Culvert	B-2.07
CB-5	Five Barrel Box Culvert	B-2.08
CB-5A	Five Barrel Box Culvert	B-2.09
CB-6	Six Barrel Box Culvert	B-2.10
CB-6A	Six Barrel Box Culvert	B-2.11
CEP-1	16' x 14' Equipment Pass	B-3.01
CW2-1	Inlet Wings, Right Angle Culvert 2:1 Slope, Height 3' to 7'	B-4.01
CW2-2	Inlet Wings, Right Angle Culvert 2:1 Slope, Height 8' to 12'	B-4.02
CW2-3	Outlet Wings, Right Angle Culvert 2:1 Slope, Height 3' to 7'	B-4.03
CW2-4	Outlet Wings, Right Angle Culvert 2:1 Slope, Height 8' to 12'	B-4.04
CW2-5	Inlet or Outlet Wings 30° Skew Culvert 2:1 Slope Height 3' to 7'	B-4.05
CW2-6	Inlet or Outlet Wings 30° Skew Culvert 2:1 Slope Height 8' to 12'	B-4.06
CW2-7	Inlet or Outlet Wings 45° Skew Culvert 2:1 Slope Height 3' to 7	B-4.07
CW2-8	Inlet or Outlet Wings 45° Skew Culvert 2:1 Slope Height 8' to 12'	B-4.08
CW6-1	Inlet Wings, Right Angle Culvert, 6:1 Slope, Height 3' to 7'	B-5.01
CW6-2	Inlet Wings, Right Angle Culvert, 6:1 Slope, Height 8' to 12'	B-5.02
CW6-3	Outlet Wings, Right Angle Culvert 6:1 Slope, Height 3' to 7'	B-5.03
CW6-4	Outlet Wings, Right Angle Culvert 6:1 Slope, Height 8' to 12'	B-5.04
CW6-5	Inlet or Outlet Wings, 30° Skew Culvert 6:1 Slope, Height 3' to 7'	B-5.05
CW6-6	Inlet or Outlet Wings, 30° Skew Culvert 6:1 Slope, Height 8' to 12'	B-5.06
CW6-7	Inlet or Outlet Wings, 45° Skew Culvert 6:1 Slope, Height 3' to 7'	B-5.07
CW6-8	Inlet or Outlet Wings, 45° Skew Culvert 6:1 Slope, Height 8' to 12'	B-5.08
CWA-1	Outlet Aprons For CW2 And CW6 Wings	B-6.01
CWA-2	Outlet Aprons For CW2 And CW6 Wings	B-6.02
CWQ-1	Headwall Quantities For CW2 And CW6 Wings	B-7.01
CWL-1	Inlet or Outlet Level Wings, Height 3' to 7'	B-8.01
CWL-2	Inlet or Outlet Level Wings, Height 8' to 12'	B-8.02
	CONTINUOUS SPAN CONCRETE SLAB BRIDGES	
CS-20	Continuous Span Slab, HS20-44 Loading	B-9.01
CSH-20	Continuous Span Slab With Hinge, HS20-44 Loading	B-9.02
CS-20 I	Continuous Span Slab, Interstate Loading	B-9.03
CSH-20 I	Continuous Span Slab With Hinge, Interstate Loading	B-9.04
CSH-M	Slab Hinge Joint And Hinge Span Reinforcing Details	B-10.01

STANDARD NUMBER	DESCRIPTION	DRAWING NUMBER
	REINFORCED CONCRETE HEADWALLS FOR PIPE CULVERTS	
PH-1	Pipe Culvert Headwalls – Miscellaneous Details	B-11.01
PH-2	Inlet Headwall, Right Angle Pipe Culvert	B-12.01
PH-3	Outlet Headwall, Right Angle Pipe Culvert	B-12.02
PH-4	Inlet And Outlet Headwalls, Right Angle Pipe Culvert, 2:1 Slope	B-12.03
PH-5	Inlet And Outlet Headwalls, Right Angle Pipe Culvert, 4:1 Slope	B-12.04
PH-6	Inlet And Outlet Headwalls, Right Angle Pipe Culvert, 6:1 Slope	B-12.05
PH-7	Inlet And Outlet Headwalls, 15° Skew Pipe Culvert	B-13.01
PH-8	Inlet And Outlet Headwalls, 15° Skew Pipe Culvert, 2:1 Slope	B-13.02
PH-9	Inlet And Outlet Headwalls, 15° Skew Pipe Culvert, 4:1 Slope	B-13.03
PH-10	Inlet And Outlet Headwalls, 15° Skew Pipe Culvert, 6:1 Slope	B-13.04
PH-11	Inlet And Outlet Headwalls, 30° Skew Pipe Culvert	B-14.01
PH-12	Inlet And Outlet Headwalls, 30° Skew Pipe Culvert, 2:1 Slope	B-14.02
PH-13	Inlet And Outlet Headwalls, 30° Skew Pipe Culvert, 4:1 Slope	B-14.03
PH-14	Inlet And Outlet Headwalls, 30° Skew Pipe Culvert, 6:1 Slope	B-14.04
PH-15	Inlet And Outlet Headwalls, 45° Skew Pipe Culvert	B-15.01
PH-16	Inlet And Outlet Headwalls, 45° Skew Pipe Culvert, 2:1 Slope	B-15.02
PH-17	Inlet And Outlet Headwalls, 45° Skew Pipe Culvert, 4:1 Slope	B-15.03
PH-18	Inlet And Outlet Headwalls, 45° Skew Pipe Culvert, 6:1 Slope	B-15.04
PH-19	Multipipe Headwalls	B-16.01
PH-20	Outlet Aprons	B-17.01
PH-21	Outlet Apron Steel List 2:1 Slope	B-17.02
PH-22	Outlet Apron Steel List 4:1 Slope	B-17.03
PH-23	Outlet Apron Steel List 6:1 Slope	B-17.04
	RETAINING WALLS	
RW-1	Cantilever Retaining Wall Details	B-18.01
RW-2	Cantilever Retaining Walls On Spread Footings	B-18.02
RW-3	Cantilever Retaining Walls On Steel Piles	B-18.03
RW-4	Cantilever Retaining Walls On Concrete Piles	B-18.04
	MISCELLANEOUS STANDARDS	
BM-1	Miscellaneous Details For Bridges	B-19.01
CP-1	Concrete Pile Details, Precast And Cast-in-Place Piles	B-20.01
CP-2	Concrete Pile Details, Prestressed Piles	B-20.02
GD-1	Guard Rail End Shoe-Dado Connection	B-21.01
H-1-1	Single Handrail	B-22.01
H-2-1	Double Handrail	B-22.02
H-3-1	Triple Handrail	B-22.03
RB-2	Rail Bank Protection For Bridges	B-23.01
RJ-3	Roadway Joint Steel	B-24.01
RJ-4	Roadway Joint Polychloroprene	B-24.02

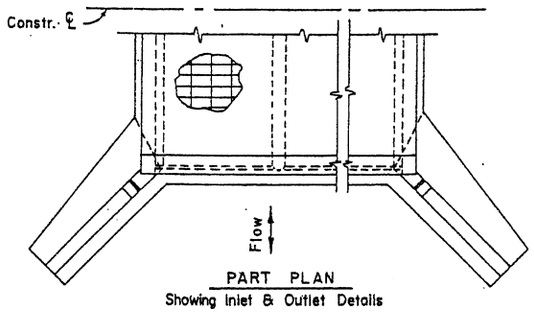

PART PLAN
Showing Inlet & Outlet Details

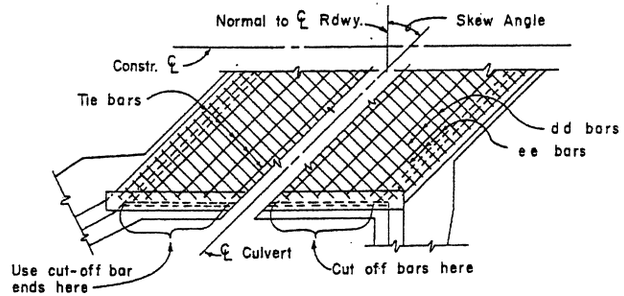

PART PLAN-SKEWED CULVERT
Showing Reinf. Steel Placement

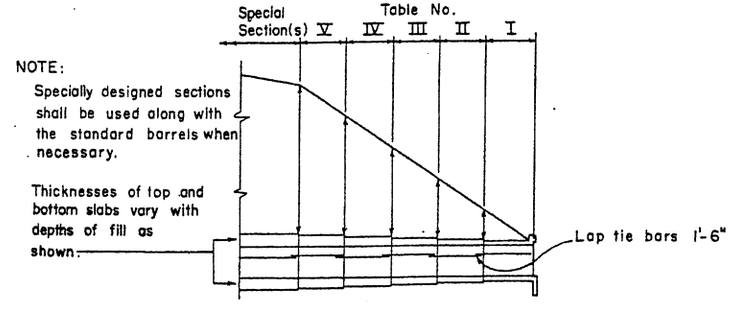

NOTE:
Specially designed sections shall be used along with the standard barrels when necessary.

Thicknesses of top and bottom slabs vary with depths of fill as shown.

DIAGRAM SHOWING TABLES TO BE USED FOR VARIOUS FILL HEIGHTS
NOTE: Culvert barrels always begin and end with Table No. I.

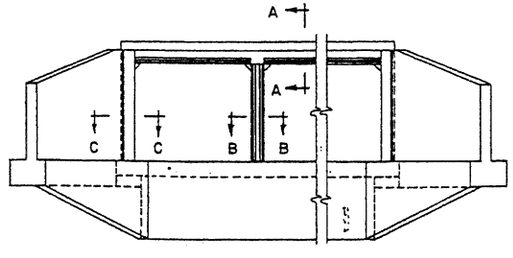

TYPICAL ELEVATION

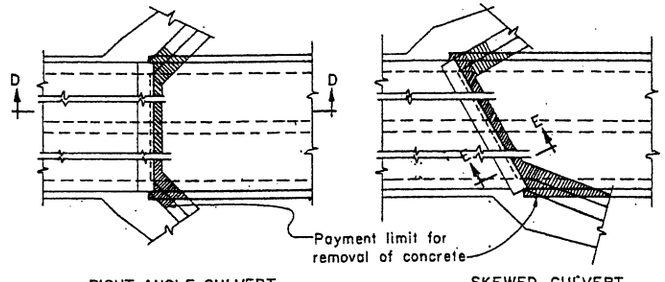

RIGHT ANGLE CULVERT

SKEWED CULVERT

PLAN

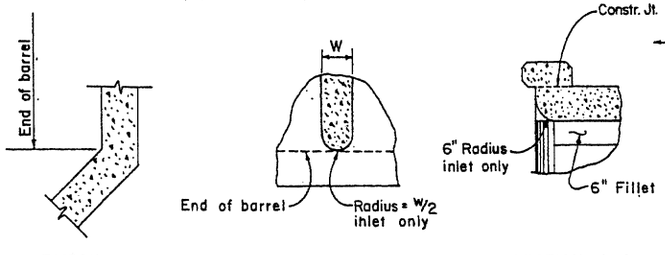

SECTION C-C

SECTION B-B

SECTION A-A

TYPICAL DETAILS

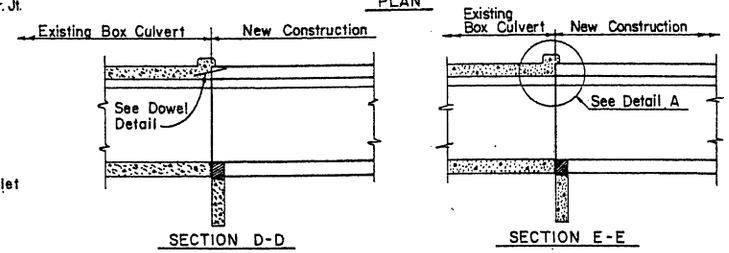

SECTION D-D

SECTION E-E

EXTENSION OF CULVERTS

QUANTITY NOTE:
Total Box Culvert Quantities include Barrel Quantities and Headwall Quantities. Add Apron Quantity when apron is used.
Standard headwall quantities include wings, curb and cut-off wall.
Barrel Quantities are obtained by multiplying length of box by quantities per linear foot of box.

GENERAL NOTES:
Construction – Standard Specifications Arizona Highway Department Edition of 1969, revised to date.
Design – A.A.S.H.O. Standard Specifications for Highway Bridges 1973.
Loading – HS20-44 and Interstate Alternate Loading.
Stresses: Class A concrete f_c = 1000 P.S.I.
Reinforcing steel f_s = 20,000 P.S.I.
Concrete shall be Class A
Reinforcing steel shall conform to A.S.T.M. spec. A-615, grade 40.
All bend dimensions are out to out of bar.
All reinforcing steel shall have 2" clear cover unless noted otherwise.

JOINT NOTE:
All structures shall have formed constr. joints in top slab and walls (optional in floor slab) spaced not more than 38'-6" apart or as shown. Reinforcing steel shall project 1'-6" thru the joint. The joint shall be made with ¼" plywood bulkhead which shall be left in place.

CONSTRUCTION NOTE:
Remove existing headwall as required for new construction.
If concrete headwall is removed to face of curb, no dowels are needed.
Use projecting reinforcing steel for bond in new concrete.
Curb to remain unless within 1'-0" of finish grade.
Wingwalls to be removed a Min. of 1'-6" to provide steel for bond.

NOTE A:
For culverts skewed from 1° to 30°, use 3 #7 bars* top and bottom of slab.
For culverts skewed over 30° to 45°, use 3 #8 bars* top and bottom of slab.
For culverts skewed over 45°, requires a special edge beam design.
*Reinforcing bars are same length as h bars in curb. Quantities to be calculated.

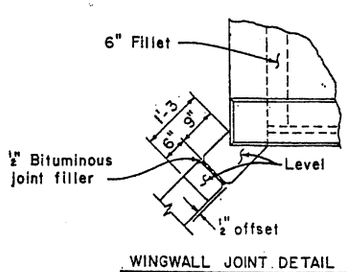

WINGWALL JOINT DETAIL
For all barrels 8 ft. and over (H ≥ 8')

NOTE:
Footing shall be continuous with no joint.

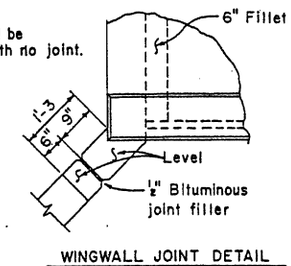

WINGWALL JOINT DETAIL
For all barrels under 8 ft. (H < 8')

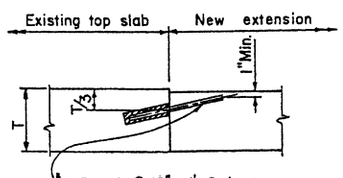

6 Dowels @ 18" x 1'-9 long. Drill and set in an approved non shrink grout or epoxy 8" into existing concrete. Top slab only.

DOWEL DETAIL

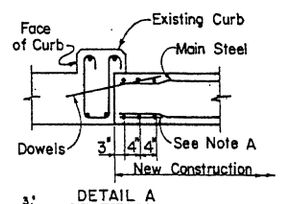

DETAIL A

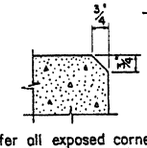

Chamfer all exposed corners thus unless otherwise noted.
This note applicable to all culvert sheets pertaining to the project.

DESIGN	DHY	8-72	(1)	Edge Beam Added with Note	SEA	10-74
DRAWN	FDL	9-72	(2)	Added Notes & Changed Details	JTW	7-76
CHECKED	NAB	3-73	(3)			

DESIGN APPROVED	STATE OF ARIZONA DEPARTMENT OF TRANSPORTATION DIVISION OF HIGHWAYS STANDARD DRAWINGS	REVISION 7-76
APPROVED FOR DISTRIBUTION	MISCELLANEOUS DETAILS FOR STANDARD BOX CULVERTS	STANDARD NO. CM-1 / DRAWING NO. B-1.01

TABLE NO. I
0'-10' FILL

Span "S"	Height "H"	Top Slab "T"	Walls "W"	aa Spacing	aa Length	cc Number⊕	ee Size	ee Spacing	ee Length	gg Number⊕	hh Size	hh Spacing	hh Length	F
6'	3'	8"	8"	15"	4'-0	20	#5	5"	7'-0	22	#4	5"	4'-9	2'-3
	4'	8"	8"	15"	5'-0	24	#5	5"	7'-0	22	#4	5"	5'-3	2'-3
	5'	8"	8"	18"	6'-0	24	#6	6"	7'-0	22	#5	6"	5'-9	2'-2
	6'	8"	8"	18"	7'-0	28	#6	6"	7'-0	22	#5	6"	6'-3	2'-2
	7'	8"	8"	12"	8'-0	32	#6	6"	7'-0	22	#5	6"	7'-3	2'-8
8'	3'	8"	9"	15"	4'-0	20	#5	5"	9'-0	22	#5	5"	5'-6	2'-11
	4'	8"	9"	15"	5'-0	24	#5	5"	9'-0	22	#5	5"	5'-9	2'-6
	5'	8"	9"	18"	6'-0	24	#6	6"	9'-0	26	#5	6"	6'-3	2'-8
	6'	8½"	9"	18"	7'-0	28	#6	6"	9'-0	26	#5	6"	6'-9	2'-8
	7'	8½"	9"	18"	8'-0	32	#6	6"	9'-0	26	#5	6"	7'-3	2'-8
	8'	8½"	9"	12"	9'-0	32	#6	6"	9'-0	26	#5	6"	7'-9	2'-8
10'	3'	9"	10"	18"	4'-3	20	#7	9"	11'-3	28	#7	9"	6'-6	3'-7
	4'	9"	10"	17"	5'-3	24	#7	8½"	11'-3	28	#7	8½"	7'-0	3'-7
	5'	9"	10"	15"	6'-3	24	#8	10"	11'-3	34	#5	5"	7'-0	3'-4
	6'	9½"	10"	15"	7'-3	28	#8	10"	11'-3	34	#5	5"	7'-3	3'-0
	7'	9½"	10"	15"	8'-3	32	#8	10"	11'-3	34	#5	5"	7'-9	3'-0
	8'	10"	10"	15"	9'-3	32	#8	10"	11'-3	34	#5	5"	8'-3	3'-0
	9'	10"	10"	14"	10'-3	36	#7	7"	11'-3	36	#6	7"	9'-0	3'-2
	10'	10½"	10"	14"	11'-3	40	#7	7"	11'-3	36	#6	7"	9'-6	3'-2
12'	8'	11"	12"	18"	9'-6	32	#7	6"	13'-6	46	#6	6"	9'-3	3'-10
	9'	11½"	12"	17"	10'-6	36	#8	8½"	13'-6	46	#7	8½"	10'-3	4'-2
	10'	11½"	12"	18"	11'-6	40	#7	6"	13'-6	46	#6	6"	10'-6	4'-0
	11'	12"	12"	18"	12'-6	40	#7	6"	13'-6	46	#6	6"	10'-9	3'-9
	12'	12"	12"	12"	13'-6	44	#7	6"	13'-6	46	#6	6"	11'-6	4'-0

TABLE NO. II
10'-15' FILL

Span "S"	Height "H"	Top Slab "T"	Walls "W"	aa Spacing	aa Length	cc Number⊕	ee Size	ee Spacing	ee Length	gg Number⊕	hh Size	hh Spacing	hh Length	F
6'	3'	8"	8"	18"	4'-0	20	#5	6"	7'-0	14	#4	6"	4'-6	2'-0
	4'	8"	8"	18"	5'-0	24	#5	6"	7'-0	14	#4	6"	5'-0	2'-0
	5'	8"	8"	18"	6'-0	24	#5	6"	7'-0	14	#4	6"	5'-6	2'-0
	6'	8"	8"	18"	7'-0	28	#5	6"	7'-0	14	#4	6"	6'-0	2'-0
	7'	8"	8"	18"	8'-0	32	#5	6"	7'-0	14	#4	6"	6'-6	2'-0
8'	3'	8½"	9"	15"	4'-0	20	#5	5"	9'-0	18	#5	5"	5'-3	2'-6
	4'	8½"	9"	15"	5'-0	24	#5	5"	9'-0	18	#5	5"	5'-9	2'-6
	5'	9"	9"	18"	6'-0	24	#6	6"	9'-0	18	#5	6"	6'-0	2'-3
	6'	9"	9"	18"	7'-0	28	#6	6"	9'-0	18	#5	6"	6'-6	2'-3
	7'	9"	9"	18"	8'-0	32	#6	6"	9'-0	18	#5	6"	7'-0	2'-3
	8'	9"	9"	18"	9'-0	32	#6	6"	9'-0	18	#5	6"	7'-9	2'-6
10'	3'	10"	10"	18"	4'-3	20	#6	6"	11'-3	22	#6	6"	5'-9	2'-11
	4'	10"	10"	18"	5'-3	24	#7	6"	11'-3	22	#6	6"	6'-3	2'-11
	5'	10½"	10"	14"	6'-3	24	#7	7"	11'-3	22	#6	7"	6'-6	2'-7
	6'	11"	10"	14"	7'-3	28	#7	7"	11'-3	22	#6	7"	7'-0	2'-7
	7'	11"	10"	14"	8'-3	32	#7	7"	11'-3	22	#6	7"	7'-6	2'-7
	8'	11"	10"	14"	9'-3	32	#8	7"	11'-3	22	#6	7"	8'-0	2'-7
	9'	11"	10"	14"	10'-3	36	#8	7"	11'-3	22	#6	7"	8'-6	2'-7
	10'	11"	10"	14"	11'-3	36	#8	7"	11'-3	22	#6	7"	9'-0	2'-7
12'	8'	13"	12"	16"	9'-9	32	#9	8"	13-6	26	#7	8"	9'-0	3'-3
	9'	13"	12"	16"	10'-9	36	#9	8"	13'-6	26	#7	8"	9'-6	3'-3
	10'	13"	12"	16"	11'-9	40	#9	8"	13'-6	26	#7	8"	10'-0	3'-3
	11'	13"	12"	16"	12'-9	40	#9	8"	13'-6	26	#7	8"	10'-6	3'-3
	12'	13½"	12"	16"	13'-9	44	#9	8"	13'-6	26	#7	8"	11'-0	3'-3

TABLE NO. III
15'-20' FILL

Span "S"	Height "H"	Top Slab "T"	Walls "W"	aa Spacing	aa Length	cc Number⊕	ee Size	ee Spacing	ee Length	gg Number⊕	hh Size	hh Spacing	hh Length	F
6'	3'	8"	8"	16½"	4'-0	20	#5	5½"	7'-0	14	#5	5½"	4'-9	2'-2
	4'	8"	8"	16½"	5'-0	24	#5	5½"	7'-0	14	#5	5½"	5'-3	1'-10
	5'	8"	8"	16½"	6'-0	24	#5	5½"	7'-0	14	#5	5½"	5'-6	1'-10
	6'	8½"	8"	16½"	7'-0	28	#5	5½"	7'-0	14	#5	5½"	6'-0	1'-10
	7'	8½"	8"	16½"	8'-0	32	#5	5½"	7'-0	14	#5	5½"	6'-9	2'-2
8'	3'	10"	9"	15"	4'-3	20	#8	10"	9'-0	18	#5	5"	5'-0	2'-2
	4'	10"	9"	15"	5'-3	24	#8	10"	9'-0	18	#5	5"	5'-6	2'-2
	5'	10½"	9"	15"	6'-3	24	#8	10"	9'-0	18	#5	5"	6'-0	2'-2
	6'	10½"	9"	15"	7'-3	28	#8	10"	9'-0	18	#5	5"	6'-6	2'-2
	7'	10½"	9"	18"	8'-3	32	#8	9"	9'-0	18	#6	6"	7'-3	2'-4
	8'	10½"	9"	18"	9'-3	32	#8	9"	9'-0	18	#6	6"	7'-9	2'-4
10'	3'	12"	10"	16½"	4'-6	20	#9	11"	11'-3	22	#6	5½"	5'-9	2'-9
	4'	12½"	10"	18"	5'-6	24	#7	6"	11'-3	22	#6	6"	6'-0	2'-5
	5'	12½"	10"	18"	6'-6	24	#7	6"	11'-3	22	#6	6"	6'-6	2'-5
	6'	12½"	10"	18"	7'-6	28	#7	6"	11'-3	22	#6	6"	7'-0	2'-5
	7'	12½"	10"	18"	8'-6	32	#9	9"	11'-3	22	#5	4½"	7'-3	2'-3
	8'	13"	10"	18"	9'-6	32	#9	9"	11'-3	22	#5	4½"	7'-9	2'-3
	9'	13"	10"	18"	10'-6	36	#9	9"	11'-3	22	#5	4½"	8'-3	2'-3
	10'	13"	10"	18"	11'-6	40	#9	9"	11'-3	22	#5	4½"	8'-9	2'-3
12'	8'	15"	12"	15"	10'-0	32	#9	7½"	13'-6	26	#7	7½"	9'-0	3'-2
	9'	15"	12"	15"	11'-0	36	#9	7½"	13'-6	26	#7	7½"	9'-6	3'-2
	10'	15½"	12"	15"	12'-0	40	#9	7½"	13'-6	26	#7	7½"	10'-0	3'-2
	11'	15½"	12"	15"	13'-0	40	#9	7½"	13'-6	26	#7	7½"	10'-6	3'-2
	12'	15½"	12"	15"	14'-0	44	#9	7½"	13'-6	26	#7	7½"	11'-0	3'-2

TABLE NO. IV
20'-25' FILL

Span "S"	Height "H"	Top Slab "T"	Walls "W"	aa Spacing	aa Length	cc Number⊕	ee Size	ee Spacing	ee Length	gg Number⊕	hh Size	hh Spacing	hh Length	F
6'	3'	9"	8"	18"	4'-0	20	#7	9"	7'-0	14	#5	4½"	4'-6	1'-10
	4'	9"	8"	18"	5'-0	24	#7	9"	7'-0	14	#5	4½"	5'-0	1'-10
	5'	9½"	8"	18"	6'-3	24	#7	9"	7'-0	14	#5	4½"	5'-6	1'-10
	6'	9½"	8"	18"	7'-3	28	#7	9"	7'-0	14	#5	4½"	6'-0	1'-10
	7'	9½"	8"	18"	8'-3	32	#7	9"	7'-0	14	#5	4½"	6'-6	1'-10
8'	3'	11½"	9"	15"	4'-6	20	#6	5"	9'-0	18	#5	5"	5'-0	2'-2
	4'	11½"	9"	15"	5'-6	24	#6	5"	9'-0	18	#5	5"	5'-6	2'-0
	5'	11½"	9"	15"	6'-6	24	#6	5"	9'-0	18	#5	5"	6'-0	2'-0
	6'	12"	9"	15"	7'-6	28	#6	5"	9'-0	18	#5	5"	6'-6	2'-0
	7'	12"	9"	15"	8'-6	32	#6	5"	9'-0	18	#5	5"	7'-0	2'-0
	8'	12"	9"	15"	9'-6	32	#6	5"	9'-0	18	#5	5"	7'-6	2'-0
10'	3'	14"	10"	14"	5'-0	20	#8	7"	11'-3	22	#7	7"	6'-0	2'-8
	4'	14"	10"	14"	6'-0	24	#8	7"	11'-3	22	#7	7"	6'-6	2'-8
	5'	14"	10"	18"	7'-0	24	#8	6"	11'-3	22	#6	6"	6'-3	2'-1
	6'	14½"	10"	15"	8'-0	28	#7	5"	11'-3	22	#5	5"	6'-6	1'-11
	7'	14½"	10"	15"	9'-0	32	#7	5"	11'-3	22	#5	5"	7'-0	1'-11
	8'	14½"	10"	15"	10'-0	32	#7	5"	11'-3	22	#5	5"	7'-6	1'-11
	9'	14½"	10"	18"	11'-0	36	#8	6"	11'-3	22	#6	6"	8'-6	2'-4
	10'	14½"	10"	12"	12'-0	40	#8	6"	11'-3	22	#6	6"	9'-0	2'-4
12'	8'	17"	12"	16½"	10'-3	32	#8	5½"	13'-6	26	#6	5½"	8'-6	2'-7
	9'	17½"	12"	16½"	11'-3	36	#8	5½"	13'-6	26	#6	5½"	9'-0	2'-7
	10'	17½"	12"	16½"	12'-3	40	#8	5½"	13'-6	26	#6	5½"	9'-6	2'-7
	11'	17½"	12"	15"	13'-3	40	#8	5"	13'-6	26	#6	5"	10'-0	2'-7
	12'	17½"	12"	10"	14'-3	44	#8	5"	13'-6	26	#6	5"	10'-6	2'-7

⊕ Total number of bars in the cross-section.

TABLE NO. V
25'-30' FILL

Span "S"	Height "H"	Top Slab "T"	Walls "W"	aa Spacing	aa Length	cc Number⊕	ee Size	ee Spacing	ee Length	gg Number⊕	hh Size	hh Spacing	hh Length	F
6'	3'	10"	8"	16"	4'-3	20	#7	8"	7'-0	14	#4	4"	4'-3	1'-7
	4'	10½"	8"	16"	5'-3	24	#7	8"	7'-0	14	#4	4"	4'-9	1'-7
	5'	10½"	8"	16"	6'-3	24	#7	8"	7'-0	14	#4	4"	5'-3	1'-7
	6'	10½"	8"	16"	7'-3	28	#7	8"	7'-0	14	#4	4"	5'-9	1'-7
	7'	10½"	8"	12"	8'-3	32	#7	8"	7'-0	14	#4	4"	6'-3	1'-7
8'	3'	13"	9"	15"	4'-9	20	#9	10"	9'-0	18	#5	5"	5'-0	2'-0
	4'	13"	9"	15"	5'-9	24	#9	10"	9'-0	18	#5	5"	5'-6	2'-0
	5'	13"	9"	15"	6'-9	24	#9	10"	9'-0	18	#5	5"	6'-0	2'-0
	6'	13"	9"	15"	7'-9	28	#9	10"	9'-0	18	#5	5"	6'-6	2'-0
	7'	13½"	9"	15"	8'-9	32	#9	10"	9'-0	18	#5	5"	7'-0	2'-0
	8'	13½"	9"	15"	9'-9	32	#9	10"	9'-0	18	#5	5"	7'-6	2'-0
10'	3'	16"	10"	18"	5'-3	20	#8	6"	11'-3	22	#6	6"	5'-6	2'-2
	4'	16"	10"	18"	6'-3	24	#8	6"	11'-3	22	#6	6"	6'-0	2'-2
	5'	16"	10"	18"	7'-3	24	#8	6"	11'-3	22	#6	6"	6'-6	2'-2
	6'	16"	10"	18"	8'-3	28	#8	6"	11'-3	22	#6	6"	7'-0	2'-2
	7'	16"	10"	18"	9'-3	32	#8	6"	11'-3	22	#6	6"	7'-6	2'-2
	8'	16"	10"	18"	10'-3	32	#8	6"	11'-3	22	#6	6"	8'-0	2'-2
	9'	16½"	10"	12"	11'-3	36	#8	6"	11'-3	22	#6	6"	8'-6	2'-2
	10'	16½"	10"	12"	12'-3	40	#8	6"	11'-3	22	#6	6"	9'-3	2'-4
12'	8'	19"	12"	18"	10'-6	32	#9	6"	13'-6	26	#6	6"	8'-6	2'-4
	9'	19½"	12"	18"	11'-6	36	#9	6"	13'-6	26	#6	6"	9'-0	2'-4
	10'	19½"	12"	15"	12'-6	40	#8	5"	13'-6	26	#6	5"	9'-6	2'-4
	11'	19½"	12"	15"	13'-6	40	#8	5"	13'-6	26	#6	5"	10'-3	2'-7
	12'	19½"	12"	10"	14'-6	44	#8	5"	13'-6	26	#6	5"	10'-9	2'-7

QUANTITIES PER LINEAR FT. OF BARREL

Span "S"	Height "H"	Table I Concrete C.Y.	Table I Reinf. Steel Lbs.	Table II Concrete C.Y.	Table II Reinf. Steel Lbs.	Table III Concrete C.Y.	Table III Reinf. Steel Lbs.	Table IV Concrete C.Y.	Table IV Reinf. Steel Lbs.	Table V Concrete C.Y.	Table V Reinf. Steel Lbs.
6'	3'	.561	97.8	.561	79.5	.561	101.7	.608	118.1	.655	104.0
	4'	.610	104.8	.610	85.8	.610	109.9	.657	123.6	.728	111.6
	5'	.660	126.1	.660	89.3	.660	113.1	.731	130.3	.778	116.7
	6'	.709	133.8	.709	95.6	.733	121.3	.780	139.4	.827	124.3
	7'	.758	149.3	.758	101.8	.782	131.8	.829	148.5	.877	134.8
8'	3'	.692	132.5	.723	127.3	.814	137.7	.905	145.1	.996	154.0
	4'	.748	138.7	.779	136.0	.870	146.4	.961	153.9	1.052	162.7
	5'	.803	145.0	.865	137.5	.956	152.5	1.017	160.0	1.108	168.8
	6'	.889	152.7	.920	145.3	1.011	161.2	1.102	168.7	1.163	177.6
	7'	.945	160.4	.976	153.0	1.067	191.9	1.158	177.5	1.249	186.3
	8'	1.000	169.5	1.031	160.2	1.122	198.8	1.214	183.5	1.305	197.6
10'	3'	.899	168.0	.973	168.5	1.128	191.3	1.277	220.9	1.418	219.0
	4'	.961	185.4	1.035	202.5	1.220	199.7	1.331	231.7	1.479	228.5
	5'	1.023	187.6	1.134	183.7	1.282	206.6	1.393	232.2	1.541	235.4
	6'	1.121	193.8	1.233	192.6	1.344	216.2	1.492	217.4	1.603	245.0
	7'	1.183	202.6	1.294	201.6	1.405	226.3	1.554	226.2	1.665	254.6
	8'	1.282	208.7	1.356	232.0	1.485	232.8	1.615	232.2	1.726	261.5
	9'	1.344	231.4	1.418	241.0	1.547	241.9	1.677	270.8	1.825	276.1
	10'	1.442	240.3	1.479	250.0	1.609	251.0	1.739	285.7	1.887	289.1
12'	8'	1.620	282.1	1.797	296.6	1.974	314.0	2.151	317.4	2.328	333.8
	9'	1.739	284.8	1.871	306.4	2.048	324.3	2.270	327.6	2.447	343.4
	10'	1.813	304.2	1.946	316.2	2.167	334.6	2.344	337.8	2.521	367.4
	11'	1.931	308.1	2.020	323.3	2.241	342.2	2.418	375.5	2.595	386.5
	12'	2.005	326.7	2.138	333.1	2.315	352.5	2.492	394.0	2.669	398.0

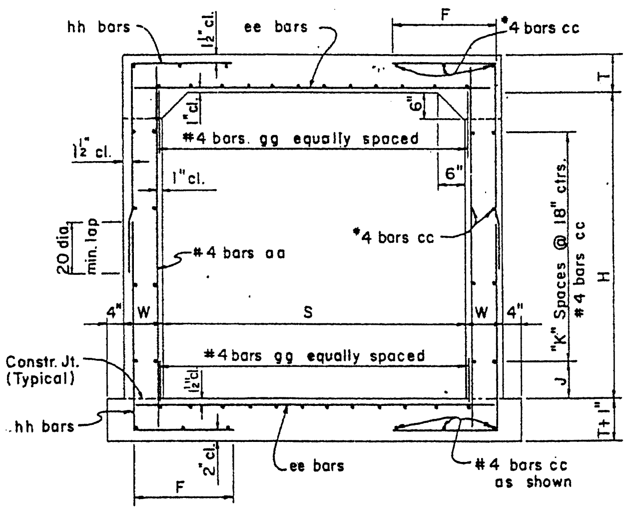

TYPICAL BARREL SECTION

Height "H"	"J" Dimension	"K" Spaces
3'	9"	1
4'	3"	2
5'	12"	2
6'	9"	3
7'	3"	4
8'	12"	4
9'	9"	5
10'	3"	6
11'	12"	6
12'	9"	7

NOTE:
See Std. CM-1 for general notes and miscellaneous details.

DESIGN	DHY	12-71	NO.	DESCRIPTION OF REVISIONS	MADE BY	DATE
DRAWN	APJ	7-72	①	Conc. quantities Table II, 6' span	J T W	7-76
CHECKED	NAB	3-73	②			
			③			

DESIGN APPROVED	STATE OF ARIZONA DEPARTMENT OF TRANSPORTATION DIVISION OF HIGHWAYS STANDARD DRAWINGS	REVISION 7-76
APPROVED FOR DISTRIBUTION	SINGLE BARREL BOX CULVERT	STANDARD NO. CB-1 / DRAWING NO. B-2.01

QUANTITIES PER LIN. FOOT OF BARRELS											
		Table I		Table II		Table III		Table IV		Table V	
Span "S"	Height "H"	Concrete C.Y.	Reinf. Steel Lbs.	Concrete C.Y.	Reinf. Steel Lbs.	Concrete C.Y.	Reinf. Steel Lbs.	Concrete C.Y.	Reinf. Steel Lbs.	Concrete C.Y.	Reinf. Steel Lbs.
6'	3'	.994	159.4	.994	132.5	1.082	139.6	1.215	143.2	1.303	149.7
	4'	1.068	167.0	1.068	142.9	1.156	149.5	1.289	153.0	1.378	159.1
	5'	1.142	174.0	1.142	148.2	1.230	155.3	1.363	158.9	1.452	164.4
	6'	1.216	186.7	1.216	167.1	1.305	165.1	1.437	169.0	1.526	174.1
	7'	1.290	196.8	1.290	176.9	1.379	175.0	1.511	178.9	1.600	188.0
8'	3'	1.302	213.2	1.474	206.9	1.646	191.4	1.876	195.1	2.105	200.2
	4'	1.385	246.9	1.557	201.4	1.729	200.7	1.959	204.9	2.188	210.1
	5'	1.526	239.0	1.641	206.7	1.813	220.5	2.042	210.7	2.272	213.7
	6'	1.609	251.3	1.724	216.1	1.896	230.8	2.126	222.0	2.355	223.5
	7'	1.693	263.6	1.807	225.4	1.979	241.2	2.209	231.9	2.438	234.8
	8'	1.776	274.4	1.891	254.6	2.063	249.4	2.292	244.4	2.522	266.9
10'	3'	1.777	310.8	2.059	261.3	2.412	259.9	2.693	278.2	3.046	281.9
	4'	1.940	325.4	2.152	272.8	2.504	270.2	2.856	273.3	3.138	291.7
	5'	2.033	328.7	2.315	281.9	2.667	278.6	2.949	278.6	3.231	297.6
	6'	2.126	322.6	2.407	271.3	2.760	288.9	3.042	288.0	3.324	307.4
	7'	2.218	335.5	2.500	281.1	2.852	299.3	3.134	298.6	3.416	317.2
	8'	2.311	336.1	2.593	315.0	2.945	305.6	3.227	329.3	3.509	329.9
	9'	2.403	349.8	2.685	325.3	3.038	316.5	3.319	340.2	3.601	348.4
	10'	2.496	362.0	2.778	337.6	3.130	348.1	3.412	358.0	3.694	387.8
12'	8'	3.102	460.5	3.524	389.6	4.030	394.6	4.452	385.5	4.837	392.9
	9'	3.213	476.7	3.635	402.7	4.141	407.5	4.563	428.9	4.985	439.3
	10'	3.324	484.2	3.746	414.9	4.252	418.4	4.674	449.5	5.096	451.0
	11'	3.435	493.9	3.857	422.3	4.363	425.2	4.785	455.3	5.207	474.0
	12'	3.546	505.6	3.968	436.1	4.474	491.5	4.896	483.0	5.318	501.6

TABLE NO. I
0'-10' FILL

Span "S"	Height "H"	Top Slab "T"	Walls "W"	aa Size	aa Spacing	aa Length	bb Size	bb Spacing	bb Length	cc Number ⊕	dd Size	dd Spacing	dd Length	dd A	dd B	dd C	ee Size	ee Spacing	ee Length	ff Size	ff Spacing	ff Length	gg Number ⊕	gg D	hh Size	hh Spacing	hh Length	hh F
6'	3'	8"	8"	#4	11"	3'-9	#5	11"	8'-3	48	#4	11"	13'-6	5'-0	2'-3	5½"	#5	11"	13'-6	#5	11"	9'-3	20	3'-6	#4	5½"	4'-9	2'-3
	4'	8"	8"	#4	11"	4'-9	#4	11"	10'-3	54	#4	11"	13'-6	5'-0	2'-3	5½"	#5	11"	13'-6	#5	11"	9'-9	20	3'-6	#4	5½"	5'-3	2'-3
	5'	8"	8"	#4	11"	5'-9	#4	11"	12'-3	54	#4	11"	13'-6	5'-0	2'-3	5½"	#5	11"	13'-6	#5	11"	10'-3	20	3'-6	#4	5½"	5'-9	2'-3
	6'	8"	8"	#4	11"	6'-9	#4	11"	14'-3	60	#4	11"	13'-6	5'-0	2'-3	5½"	#5	11"	13'-6	#5	11"	11'-6	20	3'-6	#4	5½"	6'-3	2'-3
	7'	8"	8"	#4	11"	7'-9	#4	11"	16'-3	66	#4	11"	13'-6	5'-0	2'-3	5½"	#5	11"	13'-6	#5	11"	11'-0	20	3'-6	#4	5½"	7'-0	2'-6
8'	3'	8½"	9"	#4	12"	4'-0	#4	6"	8'-6	48	#5	12"	16'-0	5'-7½	3'-4	6"	#5	12"	17'-9	#6	12"	10'-0	24	4'-5	#5	6"	5'-9	3'-1
	4'	8½"	9"	#4	12"	5'-0	#4	6"	10'-6	54	#5	12"	16'-6	5'-10	3'-4	6"	#6	12"	17'-9	#6	12"	10'-6	28	4'-5	#5	6"	6'-3	3'-1
	5'	9"	9"	#4	14"	6'-0	#4	7"	12'-6	54	#6	14"	16'-6	6'-0	3'-0	6½"	#6	14"	17'-9	#6	14"	11'-0	28	4'-8	#5	7"	6'-6	2'-9
	6'	9"	9"	#4	14"	7'-0	#4	7"	14'-6	60	#6	14"	16'-6	6'-0	3'-0	6½"	#6	14"	17'-9	#6	14"	11'-6	28	4'-8	#5	7"	7'-0	2'-9
	7'	9"	9"	#4	14"	8'-0	#4	7"	16'-6	66	#6	14"	16'-6	5'-9½	3'-4	6½"	#6	14"	17'-9	#6	14"	12'-0	28	4'-4	#5	7"	7'-6	2'-9
	8'	9"	9"	#4	14"	9'-0	#4	7"	18'-6	66	#6	14"	17'-0	6'-1	3'-4	6½"	#6	14"	17'-9	#6	14"	13'-0	28	4'-4	#5	7"	8'-0	2'-9
10'	3'	10"	10"	#4	11"	4'-3	#5	5½"	9'-0	48	#6	11"	19'-9	6'-11	4'-2	7½"	#5	11"	21'-9	#6	11"	17'-6	32	5'-5	#5	5½"	6'-6	3'-9
	4'	10½"	10"	#4	11"	5'-3	#5	5½"	11'-0	54	#6	11"	19'-9	6'-10	4'-2	8"	#5	11"	21'-9	#6	11"	17'-6	32	5'-4	#5	5½"	7'-0	3'-9
	5'	10½"	10"	#4	11"	6'-3	#6	11"	13'-0	54	#6	11"	20'-3	7'-1	4'-2	8"	#5	11"	21'-9	#6	11"	18'-0	32	5'-4	#5	5½"	7'-3	3'-6
	6'	10½"	10"	#4	13"	7'-3	#5	6½"	15'-0	60	#6	13"	20'-3	7'-2	4'-0	8"	#6	13"	21'-9	#7	13"	12'-6	32	5'-6	#5	6½"	7'-9	3'-6
	7'	10½"	10"	#4	13"	8'-3	#5	6½"	17'-0	66	#6	13"	20'-3	7'-2	4'-0	8"	#6	13"	21'-9	#7	13"	13'-0	32	5'-6	#5	6½"	8'-0	3'-3
	8'	10½"	10"	#4	13"	9'-3	#6	13"	19'-0	66	#6	13"	20'-3	7'-2	4'-0	8"	#6	13"	21'-9	#7	13"	13'-6	32	5'-6	#5	6½"	8'-6	3'-3
	9'	10½"	10"	#4	13"	10'-3	#6	13"	21'-0	72	#6	13"	20'-3	7'-2	4'-0	8"	#6	13"	21'-9	#7	13	14'-0	32	5'-6	#5	6½"	9'-0	3'-3
	10'	10½"	10"	#4	13"	11'-3	#4	6½"	23'-0	78	#6	13"	20'-3	7'-2	4'-0	8"	#6	13"	21'-9	#7	13"	15'-0	32	5'-6	#5	6½"	9'-6	3'-3
12'	8'	12½"	12"	#4	11"	9'-6	#5	5½"	20'-0	66	#6	11"	23'-9	8'-2	5'-0	10"	#6	11"	26'-6	#7	11"	17'-3	40	6'-4	#5	5½"	9'-9	4'-3
	9'	12½"	12"	#4	11"	10'-6	#5	5½"	22'-0	72	#6	11"	24'-3	8'-5	5'-0	10"	#6	11"	26'-6	#7	11"	17'-3	40	6'-4	#5	5½"	10'-3	4'-3
	10'	12½"	12"	#4	12"	11'-6	#5	6"	24'-0	78	#7	12"	24'-6	8'-6½	5'-0	10"	#6	12"	26'-6	#7	12"	17'-3	40	6'-4	#5	6"	10'-9	4'-3
	11'	12½"	12"	#4	12"	12'-6	#5	6"	26'-0	78	#7	12"	24'-6	8'-6½	5'-0	10"	#6	12"	26'-6	#7	12	17'-3	40	6'-4	#5	6"	11'-3	4'-3
	12'	12½	12"	#4	12"	13'-6	#5	6"	28'-0	84	#7	12"	24'-0	8'-3½	5'-0	10"	#6	12"	26'-6	#7	12"	17'-3	40	6'-4	#5	6"	11'-9	4'-3

⊕ Total number of bars in the cross-section.

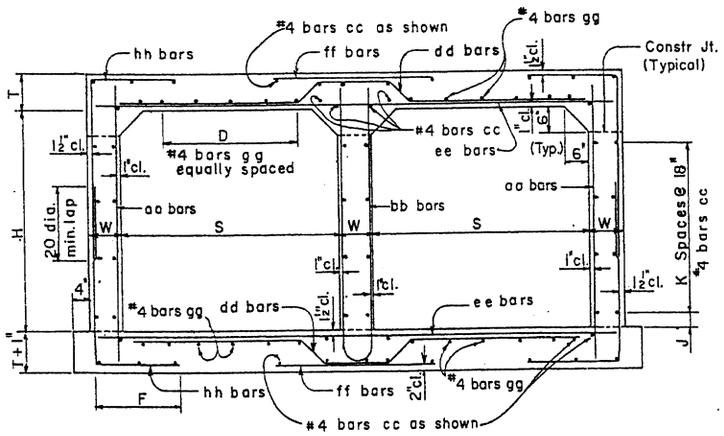

TYPICAL SECTION

Height "H"	"J" Dim.	"K" Spaces
3'	9"	1
4'	3"	2
5'	12"	2
6'	9"	3
7'	3"	4
8'	12"	4
9'	9"	5
10'	3"	6
11'	12"	6
12'	9"	7

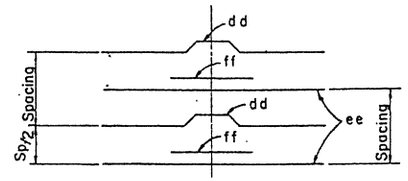

REINFORCING BAR PLACING DIAGRAM

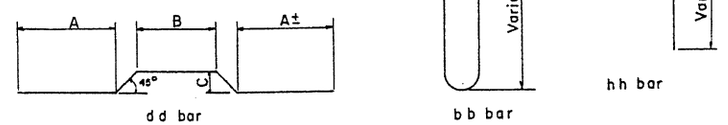

dd bar

bb bar

hh bar

BENDS

NOTE:

See Std. CB-2A for Tables No. II through V.

See Std. CM-1 for general notes and miscellaneous details.

All bend dimensions are out to out of bar.

DESIGN	DHY	12-71	NO.	DESCRIPTION OF REVISIONS	MADE BY	DATE
DRAWN	APJ	7-72	①	Conc. quantities Table II 6' Span	JTW	7-76
CHECKED	NAB	3-73	②			
			③			

DESIGN APPROVED

APPROVED FOR DISTRIBUTION

STATE OF ARIZONA
DEPARTMENT OF TRANSPORTATION
DIVISION OF HIGHWAYS
STANDARD DRAWINGS

DOUBLE BARREL
BOX CULVERT

REVISION 7-76

STANDARD NO. CB-2

DRAWING NO. B-2.02

TABLE NO. II
10'-15' FILL

Span "S"	Height "H"	Top Slab "T"	Walls "W"	aa Size	aa Spacing	aa Length	bb Size	bb Spacing	bb Length	cc Number	dd Size	dd Spacing	dd Length	dd A	dd B	dd C	ee Size	ee Spacing	ee Length	ff Size	ff Spacing	ff Length	gg Number	gg D	hh Size	hh Spacing	hh Length	hh F
6'	3'	8"	8"	#4	12"	3'-9	#4	12"	8'-0	48	#5	12"	12'-6	4'-5	2'-6	5"	#4	12"	13'-6	#5	12"	4'-9	20	3'-4	#4	6"	4'-3	1'-9
	4'	8"	8"	#4	12"	4'-9	#4	12"	10'-0	54	#5	12"	13'-0	4'-8	2'-6	5"	#4	12"	13'-6	#5	12"	4'-9	20	3'-4	#4	6"	4'-9	1'-9
	5'	8"	8"	#4	12"	5'-9	#4	12"	12'-0	54	#5	12"	13'-0	4'-8	2'-6	5"	#4	12"	13'-6	#5	12"	4'-9	20	3'-4	#4	6"	5'-3	1'-9
	6'	8"	8"	#4	11"	6'-9	#4	11"	14'-0	60	#5	11"	13'-0	4'-8	2'-6	5"	#4	11"	13'-6	#5	11"	4'-9	20	3'-4	#4	5½"	5'-9	1'-9
	7'	8"	8"	#4	11"	7'-9	#4	11"	16'-0	66	#5	11"	13'-0	4'-8	2'-6	5"	#4	11"	13'-6	#5	11"	4'-9	20	3'-4	#4	5½"	6'-3	1'-9
8'	3'	10"	9"	#4	12"	4'-3	#4	12"	9'-0	48	#6	12"	16'-6	5'-10½	3'-0	7½"	#5	12"	17'-9	#6	12"	6'-3	24	4'-6	#5	6"	5'-0	2'-3
	4'	10"	9"	#4	12"	5'-3	#4	12"	11'-0	54	#6	12"	17'-0	6'-1½	3'-0	7½"	#5	12"	17'-9	#6	12"	6'-3	24	4'-6	#4	6"	5'-3	2'-0
	5'	10"	9"	#4	12"	6'-3	#4	12"	13'-0	54	#6	12"	17'-0	6'-1½	3'-0	7½"	#5	12"	17'-9	#6	12"	6'-3	24	4'-6	#4	6"	5'-9	2'-0
	6'	10"	9"	#4	12"	7'-3	#4	12"	15'-0	60	#6	12"	17'-0	6'-1½	3'-0	7½"	#5	12"	17'-9	#6	12"	6'-3	24	4'-6	#4	6"	6'-3	2'-0
	7'	10"	9"	#4	12"	8'-3	#4	12"	17'-0	66	#6	12"	17'-0	6'-1½	3'-0	7½"	#5	12"	17'-9	#6	12"	6'-3	24	4'-6	#4	6"	6'-9	2'-0
	8'	10"	9"	#4	12"	9'-3	#4	12"	19'-0	66	#6	12"	17'-0	6'-1½	3'-0	7½"	#5	12"	17'-9	#6	12"	6'-3	24	4'-6	#5	6"	7'-6	2'-3
10'	3'	12"	10"	#4	11"	4'-6	#4	11"	9'-6	48	#6	11"	20'-3	7'-3	3'-6	9½"	#5	11"	21'-9	#7	11"	7'-6	28	5'-9	#5	5½"	5'-3	2'-3
	4'	12"	10"	#4	11"	5'-6	#4	11"	11'-6	54	#6	11"	20'-3	7'-3	3'-6	9½"	#5	11"	21'-9	#7	11"	7'-6	28	5'-9	#5	5½"	5'-9	2'-3
	5'	12½"	10"	#4	11"	6'-6	#4	11"	13'-6	54	#6	11"	20'-9	7'-5	3'-6	10"	#5	11"	21'-9	#7	11"	7'-6	28	5'-8	#5	5½"	6'-3	2'-3
	6'	12½"	10"	#4	11"	7'-6	#4	11"	15'-6	60	#6	11"	20'-9	7'-5	3'-6	10"	#5	11"	21'-9	#7	11"	7'-6	28	5'-8	#4	5½"	6'-9	2'-3
	7'	12½"	10"	#4	11"	8'-6	#4	11"	17'-6	66	#6	11"	20'-9	7'-5	3'-6	10"	#5	11"	21'-9	#7	11"	7'-6	28	5'-8	#4	5½"	7'-3	2'-3
	8'	12½"	10"	#4	13"	9'-6	#4	13"	19'-6	66	#7	13"	21'-3	7'-8	3'-6	10"	#6	13"	21'-9	#7	13"	7'-6	28	5'-8	#5	6½"	7'-9	2'-3
	9'	12½"	10"	#4	13"	10'-6	#4	13"	21'-6	72	#7	13"	21'-3	7'-8	3'-6	10"	#6	13"	21'-9	#7	13"	7'-6	28	5'-8	#5	6½"	8'-3	2'-3
	10'	12½"	10"	#4	13"	11'-6	#4	13"	23'-6	78	#7	13"	21'-3	7'-8	3'-6	10"	#6	13"	21'-9	#7	13"	7'-6	28	5'-8	#5	6½"	9'-0	2'-6
12'	8'	15"	12"	#4	11"	10'-0	#4	11"	20'-6	66	#6	11"	24'-6	8'-6	4'-6	12½"	#6	11"	26'-6	#8	11"	9'-0	32	6'-5	#5	5½"	8'-3	2'-6
	9'	15"	12"	#4	11"	11'-0	#4	11"	22'-6	72	#6	11"	25'-0	8'-9	4'-6	12½"	#6	11"	26'-6	#8	11"	9'-0	32	6'-5	#5	5½"	8'-9	2'-6
	10'	15"	12"	#4	11"	12'-0	#4	11"	24'-6	78	#6	11"	24'-6	8'-6	4'-6	12½"	#6	11"	26'-6	#8	11"	9'-0	32	6'-5	#5	5½"	9'-6	2'-9
	11'	15"	12"	#4	11"	13'-0	#4	11"	26'-6	78	#6	11"	24'-6	8'-6	4'-6	12½"	#6	11"	26'-6	#8	11"	9'-0	32	6'-5	#5	5½"	10'-0	2'-9
	12'	15"	12"	#4	11"	14'-0	#4	11"	28'-6	84	#6	11"	24'-6	8'-6	4'-6	12½"	#6	11"	26'-6	#8	11"	9'-0	32	6'-5	#5	5½"	10'-9	3'-0

TABLE NO. III
15'-20' FILL

Span "S"	Height "H"	Top Slab "T"	Walls "W"	aa Size	aa Spacing	aa Length	bb Size	bb Spacing	bb Length	cc Number	dd Size	dd Spacing	dd Length	dd A	dd B	dd C	ee Size	ee Spacing	ee Length	ff Size	ff Spacing	ff Length	gg Number	gg D	hh Size	hh Spacing	hh Length	hh F
6'	3'	9"	8"	#4	11"	4'-0	#4	11"	8'-6	48	#5	11"	13'-0	4'-6	2'-6	6½"	#4	11"	13'-6	#5	11"	4'-9	16	3'-1	#4	5½"	4'-3	1'-8
	4'	9"	8"	#4	11"	5'-0	#4	11"	10'-6	54	#5	11"	13'-0	4'-6	2'-6	6½"	#4	11"	13'-6	#5	11"	4'-9	16	3'-1	#4	5½"	4'-9	1'-8
	5'	9"	8"	#4	11"	6'-0	#4	11"	12'-6	54	#5	11"	13'-0	4'-6	2'-6	6½"	#4	11"	13'-6	#5	11"	4'-9	16	3'-1	#4	5½"	5'-3	1'-8
	6'	9"	8"	#4	11"	7'-0	#4	11"	14'-6	60	#5	11"	13'-0	4'-6	2'-6	6½"	#4	11"	13'-6	#5	11"	4'-9	16	3'-1	#4	5½"	5'-9	1'-8
	7'	9"	8"	#4	11"	8'-0	#4	11"	16'-6	66	#5	11"	13'-0	4'-6	2'-6	6½"	#4	11"	13'-6	#5	11"	4'-9	16	3'-1	#4	5½"	6'-3	1'-8
8'	3'	11½"	9"	#4	12"	4'-6	#4	12"	9'-6	48	#6	12"	17'-0	5'-11½	3'-0	9"	#5	12"	17'-9	#6	12"	6'-3	24	4'-3	#4	6"	4'-6	1'-9
	4'	11½"	9"	#4	12"	5'-6	#4	12"	11'-6	54	#6	12"	17'-0	5'-11½	3'-0	9"	#5	12"	17'-9	#6	12"	6'-3	24	4'-3	#4	6"	5'-0	1'-9
	5'	11½"	9"	#4	13"	6'-6	#4	13"	13'-6	54	#6	13"	17'-0	5'-11½	3'-0	9"	#5	13"	17'-9	#7	13"	6'-6	24	4'-3	#5	6½"	6'-0	2'-0
	6'	11½"	9"	#4	13"	7'-6	#4	13"	15'-6	60	#6	13"	17'-0	5'-11½	3'-0	9"	#5	13"	17'-9	#7	13"	6'-6	24	4'-3	#5	6½"	6'-6	2'-0
	7'	11½"	9"	#4	13"	8'-6	#4	13"	17'-6	66	#6	13"	17'-0	5'-11½	3'-0	9"	#5	13"	17'-9	#7	13"	6'-6	24	4'-3	#5	6½"	7'-0	2'-0
	8'	11½"	9"	#4	13"	9'-6	#4	13"	19'-6	66	#6	13"	17'-0	6'-2½	2'-6	9"	#5	13"	17'-9	#7	13"	6'-6	24	4'-9	#5	6½"	7'-9	2'-4
10'	3'	14½"	10"	#4	13"	5'-0	#4	13"	10'-6	48	#6	13"	20'-9	7'-5½	3'-0	1'-0	#6	13"	21'-9	#8	13"	7'-9	28	5'-10	#5	6½"	5'-3	2'-0
	4'	14½"	10"	#4	13"	6'-0	#4	13"	12'-6	54	#6	13"	20'-9	7'-5½	3'-0	1'-0	#6	13"	21'-9	#8	13"	7'-9	28	5'-10	#5	6½"	5'-9	2'-0
	5'	15"	10"	#4	13"	7'-0	#4	13"	14'-6	54	#6	13"	21'-6	7'-9	3'-0	1'-0½	#6	13"	21'-9	#8	13"	7'-9	28	5'-9	#5	6½"	6'-3	2'-0
	6'	15"	10"	#4	13"	8'-0	#4	13"	16'-6	60	#6	13"	21'-6	7'-9	3'-0	1'-0½	#6	13"	21'-9	#8	13"	7'-9	28	5'-9	#5	6½"	6'-9	2'-0
	7'	15"	10"	#4	13"	9'-0	#4	13"	18'-6	66	#6	13"	21'-6	7'-9	3'-0	1'-0½	#6	13"	21'-9	#8	13"	7'-9	28	5'-9	#5	6½"	7'-3	2'-0
	8'	15"	10"	#4	13"	10'-0	#4	13"	20'-6	66	#6	13"	21'-6	7'-9	3'-0	1'-0½	#6	13"	21'-9	#8	13"	7'-9	28	5'-9	#5	6½"	7'-9	2'-0
	9'	15"	10"	#4	13"	11'-0	#4	13"	22'-6	72	#6	13"	21'-0	7'-6	3'-0	1'-0½	#6	13"	21'-9	#8	13"	7'-9	28	5'-9	#5	6½"	8'-6	2'-4
	10'	15"	10"	#4	12"	12'-0	#4	12"	24'-6	78	#6	12"	21'-0	7'-6	3'-0	1'-0½	#6	12"	21'-9	#8	12"	7'-9	28	5'-9	#5	6"	9'-0	2'-4
12'	8'	18"	12"	#4	12"	10'-6	#4	12"	21'-6	66	#7	12"	25'-6	8'-11	4'-0	1'-3½	#6	12"	26'-6	#8	12"	9'-0	32	6'-5	#5	6"	8'-3	2'-4
	9'	18"	12"	#4	12"	11'-6	#4	12"	23'-6	72	#7	12"	25'-6	8'-11	4'-0	1'-3½	#6	12"	26'-6	#8	12"	9'-0	32	6'-5	#5	6"	9'-0	2'-6
	10'	18"	12"	#4	12"	12'-6	#4	12"	25'-6	78	#7	12"	25'-6	8'-11	4'-0	1'-3½	#6	12"	26'-6	#8	12"	9'-0	32	6'-5	#5	6"	9'-6	2'-6
	11'	18"	12"	#4	12"	13'-6	#4	12"	27'-6	78	#7	12"	25'-6	8'-11	4'-0	1'-3½	#6	12"	26'-6	#8	12"	9'-0	32	6'-5	#5	6"	10'-0	2'-6
	12'	18"	12"	#5	12"	14'-6	#4	12"	29'-6	84	#7	12"	25'-6	8'-11	4'-0	1'-3½	#6	12"	26'-6	#8	12"	9'-0	32	6'-5	#6	6"	11'-0	3'-0

TABLE NO. IV
20'-25' FILL

Span "S"	Height "H"	Top Slab "T"	Walls "W"	aa Size	aa Spacing	aa Length	bb Size	bb Spacing	bb Length	cc Number	dd Size	dd Spacing	dd Length	dd A	dd B	dd C	ee Size	ee Spacing	ee Length	ff Size	ff Spacing	ff Length	gg Number	gg D	hh Size	hh Spacing	hh Length	hh F
6'	3'	10½"	8"	#4	11"	4'-3	#4	11"	9'-0	48	#5	11"	13'-9	4'-8	2'-6	8"	#4	11"	13'-6	#5	11"	5'-3	16	2'-10	#4	5½"	4'-3	1'-6
	4'	10½"	8"	#4	11"	5'-3	#4	11"	11'-0	54	#5	11"	13'-9	4'-8	2'-6	8"	#4	11"	13'-6	#5	11"	5'-3	16	2'-10	#4	5½"	4'-9	1'-6
	5'	10½"	8"	#4	11"	6'-3	#4	11"	13'-0	54	#5	11"	13'-9	4'-8	2'-6	8"	#4	11"	13'-6	#5	11"	5'-3	16	2'-10	#4	5½"	5'-3	1'-6
	6'	10½"	8"	#4	11"	7'-3	#4	11"	15'-0	60	#5	11"	13'-9	4'-8	2'-6	8"	#4	11"	13'-6	#5	11"	4'-9	16	2'-10	#4	5½"	6'-0	1'-9
	7'	10½"	8"	#4	11"	8'-3	#4	11"	17'-0	66	#5	11"	13'-9	4'-8	2'-6	8"	#4	11"	13'-6	#5	11"	4'-9	16	2'-10	#4	5½"	6'-6	1'-9
8'	3'	13½"	9"	#4	11"	4'-9	#4	11"	10'-0	48	#5	11"	17'-6	6'-0	3'-0	11"	#5	11"	17'-9	#7	11"	6'-6	20	3'-11	#4	5½"	4'-6	1'-6
	4'	13½"	9"	#4	11"	5'-9	#4	11"	12'-0	54	#5	11"	17'-6	6'-0	3'-0	11"	#5	11"	17'-9	#7	11"	6'-6	20	3'-11	#4	5½"	5'-0	1'-6
	5'	13½"	9"	#4	11"	6'-9	#4	11"	14'-0	54	#5	11"	17'-6	6'-0	3'-0	11"	#5	11"	17'-9	#7	11"	6'-6	20	3'-11	#4	5½"	5'-6	1'-6
	6'	13½"	9"	#4	11"	7'-9	#4	11"	16'-0	60	#5	11"	17'-6	6'-0	3'-0	11"	#5	11"	17'-9	#7	11"	6'-6	20	3'-11	#4	5½"	6'-3	1'-9
	7'	13½"	9"	#4	11"	8'-9	#4	11"	18'-0	66	#5	11"	17'-6	6'-0	3'-0	11"	#5	11"	17'-9	#7	11"	6'-6	20	3'-11	#4	5½"	6'-9	1'-9
	8'	13½"	9"	#4	12"	9'-9	#4	12"	20'-0	66	#5	12"	17'-6	6'-0	3'-0	11"	#5	12"	17'-9	#7	12"	6'-6	20	3'-11	#5	6"	7'-3	1'-9
10'	3'	16½"	10"	#4	12"	5'-3	#4	12"	11'-0	48	#6	12"	21'-6	7'-7½	3'-0	1'-2	#6	12"	21'-9	#8	12"	7'-9	28	5'-6	#5	6"	5'-0	1'-9
	4'	17"	10"	#4	12"	6'-3	#4	12"	13'-0	54	#6	12"	21'-9	7'-8	3'-0	1'-2½	#6	12"	21'-9	#8	12"	7'-9	28	5'-5	#4	6"	5'-6	1'-9
	5'	17"	10"	#4	12"	7'-3	#4	12"	15'-0	54	#6	12"	21'-9	7'-8	3'-0	1'-2½	#6	12"	21'-9	#8	12"	7'-9	28	5'-5	#4	6"	6'-0	1'-9
	6'	17"	10"	#4	12"	8'-3	#4	12"	17'-0	60	#6	12"	21'-9	7'-8	3'-0	1'-2½	#6	12"	21'-9	#8	12"	7'-9	28	5'-5	#4	6"	6'-6	1'-9
	7'	17"	10"	#4	12"	9'-3	#4	12"	19'-0	66	#6	12"	21'-9	7'-8	3'-0	1'-2½	#6	12"	21'-9	#8	12"	7'-9	28	5'-5	#4	6"	7'-3	2'-0
	8'	17"	10"	#4	12"	10'-3	#4	12"	21'-0	66	#6	12"	21'-9	7'-8	3'-0	1'-2½	#6	12"	21'-9	#8	12"	7'-9	28	5'-5	#5	6"	8'-0	2'-0
	9'	17"	10"	#4	12"	11'-3	#4	12"	23'-0	72	#6	12"	21'-9	7'-8	3'-0	1'-2½	#6	12"	21'-9	#8	12"	7'-9	28	5'-5	#5	6"	8'-6	2'-0
	10'	17"	10"	#5	12"	12'-3	#4	12"	25'-0	78	#6	12"	21'-3	7'-5	3'-0	1'-2½	#6	12"	21'-9	#8	12"	7'-9	28	5'-5	#5	6"	9'-0	2'-3
12'	8'	20½"	12"	#4	15"	11'-0	#4	15"	22'-6	66	#6	10"	25'-9	8'-9	4'-0	1'-6	#6	10"	26'-6	#8	10"	9'-0	28	6'-0	#4	5"	8'-3	2'-2
	9'	20½"	12"	#4	15"	12'-0	#4	15"	24'-6	72	#6	10"	25'-9	8'-9	4'-0	1'-6	#6	10"	26'-6	#8	10"	9'-0	28	6'-0	#5	5"	9'-0	2'-4
	10'	20½"	12"	#4	10"	13'-0	#4	15"	26'-6	78	#6	10"	25'-9	8'-9	4'-0	1'-6	#6	10"	26'-6	#8	10"	9'-0	28	6'-0	#5	5"	9'-9	2'-6
	11'	20½"	12"	#4	10"	14'-0	#4	15"	28'-6	78	#6	10"	25'-3	8'-6	4'-0	1'-6	#6	10"	26'-6	#8	10"	9'-0	28	6'-0	#5	5"	10'-3	2'-6
	12'	20½"	12"	#5	10"	15'-0	#4	15"	30'-6	84	#6	10"	25'-3	8'-6	4'-0	1'-6	#6	10"	26'-6	#8	10"	9'-0	28	6'-0	#5	5"	11'-0	2'-9

TABLE NO. V
25'-30' FILL

Span "S"	Height "H"	Top Slab "T"	Walls "W"	aa Size	aa Spacing	aa Length	bb Size	bb Spacing	bb Length	cc Number	dd Size	dd Spacing	dd Length	dd A	dd B	dd C	ee Size	ee Spacing	ee Length	ff Size	ff Spacing	ff Length	gg Number	gg D	hh Size	hh Spacing	hh Length	hh F
6'	3'	11½"	8"	#4	15"	4'-6	#4	15"	9'-6	48	#5	10"	14'-0	4'-11	2'-0	9"	#4	10"	13'-6	#5	10"	5'-3	16	3'-2	#4	5"	4'-3	1'-6
	4'	11½"	8"	#4	15"	5'-6	#4	15"	11'-6	54	#5	10"	14'-0	4'-11	2'-0	9"	#4	10"	13'-6	#5	10"	5'-3	16	3'-2	#4	5"	4'-9	1'-6
	5'	11½"	8"	#4	15"	6'-6	#4	15"	13'-6	54	#5	10"	14'-0	4'-11	2'-0	9"	#4	10"	13'-6	#5	10"	5'-3	16	3'-2	#4	5"	5'-3	1'-6
	6'	11½"	8"	#4	15"	7'-6	#4	15"	15'-6	60	#5	10"	14'-0	4'-11	2'-0	9"	#4	10"	13'-6	#5	10"	4'-9	16	3'-2	#4	5"	6'-0	1'-9
	7'	11½"	8"	#4	10"	8'-6	#4	15"	17'-6	66	#5	10"	14'-0	4'-11	2'-0	9"	#4	10"	13'-6	#5	10"	4'-9	16	3'-2	#4	5"	6'-6	1'-9
8'	3'	15½"	9"	#4	11"	5'-0	#4	11"	10'-9	48	#5	11"	17'-9	5'-10	3'-0	1'-1	#5	11"	17'-9	#7	11"	7'-0	20	3'-7	#4	5½"	4'-9	1'-8
	4'	15½"	9"	#4	11"	6'-0	#4	11"	12'-9	54	#5	11"	17'-9	5'-10	3'-0	1'-1	#5	11"	17'-9	#7	11"	7'-0	20	3'-7	#4	5½"	5'-3	1'-8
	5'	15½"	9"	#4	11"	7'-0	#4	11"	14'-9	54	#5	11"	17'-9	5'-10	3'-0	1'-1	#5	11"	17'-9	#7	11"	6'-6	20	3'-7	#4	5½"	5'-9	1'-8
	6'	15½"	9"	#4	11"	8'-0	#4	11"	16'-9	60	#5	11"	17'-9	5'-10	3'-0	1'-1	#5	11"	17'-9	#7	11"	6'-6	20	3'-7	#4	5½"	6'-3	1'-8
	7'	15½"	9"	#4	11"	9'-0	#4	11"	18'-9	66	#5	11"	17'-9	5'-10	3'-0	1'-1	#5	11"	17'-9	#7	11"	6'-6	20	3'-7	#4	5½"	6'-9	1'-8
	8'	15½"	9"	#4	11"	10'-0	#4	11"	20'-9	66	#5	11"	17'-9	5'-10	3'-0	1'-1	#5	11"	17'-9	#7	11"	6'-6	20	3'-7	#5	5½"	7'-9	2'-0
10'	3'	19"	10"	#4	11"	5'-9	#4	11"	11'-9	48	#6	11"	21'-9	7'-5	3'-0	1'-4½	#6	11"	21'-9	#8	11"	7'-9	24	5'-1	#4	5½"	5'-0	1'-7
	4'	19"	10"	#4	11"	6'-9	#4	11"	13'-9	54	#6	11"	21'-9	7'-5	3'-0	1'-4½	#6	11"	21'-9	#8	11"	7'-9	24	5'-1	#4	5½"	5'-6	1'-7
	5'	19"	10"	#4	11"	7'-9	#4	11"	15'-9	54	#6	11"	21'-9	7'-5	3'-0	1'-4½	#6	11"	21'-9	#8	11"	7'-9	24	5'-1	#4	5½"	6'-0	1'-7
	6'	19"	10"	#4	11"	8'-9	#4	11"	17'-9	60	#6	11"	21'-9	7'-5	3'-0	1'-4½	#6	11"	21'-9	#8	11"	7'-9	24	5'-1	#4	5½"	6'-6	1'-7
	7'	19"	10"	#4	11"	9'-9	#4	11"	19'-9	66	#6	11"	21'-9	7'-5	3'-0	1'-4½	#6	11"	21'-9	#8	11"	7'-9	24	5'-1	#4	5½"	7'-0	1'-7
	8'	19"	10"	#4	13"	10'-9	#4	13"	21'-9	66	#7	13"	22'-0	7'-8	3'-0	1'-4½	#6	13"	21'-9	#8	13"	7'-9	24	5'-1	#5	6½"	8'-0	2'-0
	9'	19"	10"	#5	13"	11'-9	#4	13"	23'-9	72	#7	13"	22'-0	7'-8	3'-0	1'-4½	#6	13"	21'-9	#8	13"	7'-9	24	5'-1	#5	6½"	8'-6	2'-0
	10'	19"	10"	#5	11"	12'-9	#4	11"	25'-9	78	#6	11"	21'-9	7'-5	3'-0	1'-4½	#6	11"	21'-9	#8	11"	7'-9	24	5'-1	#5	5½"	9'-3	2'-3
12'	8'	23"	12"	#4	10"	11'-3	#4	15"	23'-0	66	#6	10"	26'-0	8'-7	4'-0	1'-8½	#6	10"	26'-6	#8	10"	9'-0	28	5'-7	#4	5"	8'-3	2'-0
	9'	23"	12"	#4	10"	12'-3	#4	15"	25'-0	72	#6	10"	26'-0	8'-7	4'-0	1'-8½	#6	10"	26'-6	#8	10"	9'-0	28	5'-7	#5	5"	9'-3	2'-4
	10'	23"	12"	#4	10"	13'-3	#4	15"	27'-0	78	#6	10"	26'-0	8'-7	4'-0	1'-8½	#6	10"	26'-6	#8	10"	9'-0	28	5'-7	#5	5"	9'-9	2'-4
	11'	23"	12"	#5	10"	14'-3	#4	15"	29'-0	78	#6	10"	26'-0	8'-7	4'-0	1'-8½	#6	10"	26'-6	#8	10"	9'-0	28	5'-7	#5	5"	10'-6	2'-8
	12'	23"	12"	#6	10"	15'-3	#4	15"	31'-0	84	#6	10"	25'-6	8'-4	4'-0	1'-8½	#6	10"	26'-6	#8	10"	9'-0	28	5'-7	#5	5"	11'-0	2'-8

⊕ Total number of bars in cross-section.

NOTE:

See Std. CB-2 for Table No. I, typical section, steel call outs, bend diagrams and quantities.

See Std. CM-1 for general notes and miscellaneous details.

DESIGN	DWY	12-71	NO	DESCRIPTION OF REVISIONS	MADE BY	DATE
DRAWN	F.D.L.	9-72	①	Table II, 6' Span, T new 8"	J.T.W.	7-76
CHECKED	N.A.B.	3-73	②			
			③			

DESIGN APPROVED

APPROVED FOR DISTRIBUTION

STATE OF ARIZONA
DEPARTMENT OF TRANSPORTATION
DIVISION OF HIGHWAYS
STANDARD DRAWINGS

DOUBLE BARREL
BOX CULVERT

REVISION 7-76

STANDARD NO. CB-2A

DRAWING NO. B-2.03

QUANTITIES PER LIN. FOOT OF BARRELS															
Span "S"	Height "H"	Table I		Table II		Table III		Table IV		Table V	
		Concrete C.Y.	Reinf. Steel Lbs.	Concrete C.Y.	Reinf. Steel Lbs.	Concrete C.Y.	Reinf. Steel Lbs.	Concrete C.Y.	Reinf. Steel Lbs.	Concrete C.Y.	Reinf. Steel Lbs.
6'	3'	1.427	238.4	1.427	191.4	1.557	201.7	1.751	206.7	1.881	215.0
	4'	1.526	244.2	1.526	204.5	1.655	214.3	1.850	219.4	1.979	227.4
	5'	1.624	251.5	1.624	211.2	1.754	221.6	1.949	226.7	2.078	233.2
	6'	1.723	264.2	1.723	236.6	1.853	234.2	2.047	238.5	2.177	244.0
	7'	1.822	276.8	1.822	249.2	1.952	246.9	2.146	251.1	2.276	260.3
8'	3'	1.881	328.6	2.134	299.8	2.387	284.7	2.724	292.9	3.062	300.9
	4'	1.992	373.7	2.245	297.0	2.498	296.7	2.835	305.5	3.173	313.5
	5'	2.187	361.5	2.356	303.7	2.609	319.3	2.947	312.8	3.284	316.3
	6'	2.298	376.2	2.467	315.7	2.720	332.2	3.058	326.9	3.395	329.0
	7'	2.409	390.8	2.578	327.7	2.831	345.0	3.169	339.6	3.506	343.0
	8'	2.521	401.4	2.689	358.3	2.942	354.5	3.280	346.5	3.617	377.1
10'	3'	2.581	461.2	2.997	387.1	3.516	390.4	3.932	418.7	4.452	432.3
	4'	2.809	481.6	3.120	401.4	3.640	403.3	4.159	415.7	4.575	445.0
	5'	2.932	481.0	3.348	412.0	3.867	412.9	4.283	422.4	4.699	452.3
	6'	3.056	502.6	3.471	404.1	3.991	425.8	4.406	434.4	4.822	464.9
	7'	3.179	520.7	3.595	416.8	4.114	438.7	4.530	447.8	4.945	477.5
	8'	3.302	513.0	3.718	456.9	4.238	446.2	4.653	479.8	5.069	483.7
	9'	3.426	529.0	3.842	469.8	4.361	459.7	4.777	493.3	5.192	504.7
	10'	3.549	537.9	3.965	484.6	4.485	503.6	4.900	514.5	5.316	555.2
12'	8'	4.451	702.0	5.073	572.7	5.820	581.4	6.442	580.1	7.065	587.9
	9'	4.599	724.1	5.221	588.6	5.968	597.0	6.591	625.9	7.213	636.7
	10'	4.747	734.1	5.369	603.5	6.116	610.5	6.739	648.9	7.361	650.8
	11'	4.895	747.9	5.517	612.5	6.264	618.7	6.887	655.9	7.509	674.8
	12'	5.043	765.1	5.666	629.0	6.413	647.2	7.035	686.0	7.657	704.8

TABLE NO. I
0'-10' FILL

Span "S"	Height "H"	Top Slab "T"	Walls "W"	aa			bb			cc	dd							ee			ff			gg	hh			
				Size	Spacing	Length	Size	Spacing	Length	Number ✠	Size	Spacing	Length	A	B	C	D	Size	Spacing	Length	Size	Spacing	Length	Number ✠	Size	Spacing	Length	F
6'	3'	8"	8"	#4	11"	3'-9	#5	11"	6'-3	68	#4	11"	20'-9	5'-1	2'-3	5½"	3'-6	#5	11"	20'-3	#5	11"	14'-6	30	#4	5½"	6'-9	4'-2
	4'	8"	8"	#4	11"	4'-9	#4	11"	10'-3	76	#4	11"	20'-9	5'-1	2'-3	5½"	3'-6	#5	11"	20'-3	#5	11"	14'-6	30	#4	5½"	7'-3	4'-2
	5'	8"	8"	#4	11"	5'-9	#4	11"	12'-3	76	#4	11"	20'-9	5'-1	2'-3	5½"	3'-6	#5	11"	20'-3	#5	11"	14'-6	30	#4	5½"	7'-9	4'-2
	6'	8"	8"	#4	11"	6'-9	#4	11"	14'-3	84	#4	11"	20'-9	5'-1	2'-3	5½"	3'-6	#5	11"	20'-3	#5	11"	14'-6	30	#4	5½"	8'-3	4'-2
	7'	8"	8"	#4	11"	7'-9	#4	11"	16'-3	92	#4	11"	20'-9	5'-1	2'-3	5½"	3'-6	#5	11"	20'-3	#5	11"	14'-6	30	#4	5½"	8'-9	4'-2
8'	3'	8½"	9"	#4	12"	4'-0	#4	6"	8'-6	68	#5	12"	25'-3	5'-8	3'-4	6"	4'-5	#5	12"	26'-6	#6	12"	18'-9	36	#5	6"	8'-0	5'-3
	4'	8½"	9"	#4	12"	5'-0	#4	6"	10'-6	76	#5	12"	25'-6	5'-9½	3'-4	6"	4'-5	#6	12"	26'-6	#6	12"	18'-9	42	#5	6"	8'-6	5'-3
	5'	9"	9"	#4	14"	6'-0	#4	7"	12'-6	76	#6	14"	25'-9	6'-0	3'-0	6½"	4'-8	#6	14"	26'-6	#6	14"	18'-9	42	#5	7"	9'-0	5'-3
	6'	9"	9"	#4	14"	7'-0	#4	7"	14'-6	84	#6	14"	25'-9	6'-0	3'-0	6½"	4'-8	#6	14"	26'-6	#6	14"	18'-9	42	#5	7"	9'-6	5'-3
	7'	9"	9"	#4	14"	8'-0	#4	7"	16'-6	92	#6	14"	25'-9	5'-10	3'-4	6½"	4'-4	#6	14"	26'-6	#6	14"	18'-9	42	#5	7"	10'-0	5'-3
	8'	9"	9"	#4	14"	9'-0	#4	7"	18'-6	92	#6	14"	26'-3	6'-1	3'-4	6½"	4'-4	#6	14"	26'-6	#6	14"	18'-9	42	#5	7"	10'-6	5'-3
10'	3'	10"	10"	#4	11"	4'-3	#5	5½"	9'-0	68	#6	11"	31'-3	7'-0	4'-2	7½"	5'-5	#5	11"	32'-9	#6	11"	23'-0	48	#5	5½"	9'-3	6'-6
	4'	10½"	10"	#4	11"	5'-3	#5	5½"	11'-0	76	#6	11"	31'-3	6'-11	4'-2	8"	5'-4	#5	11"	32'-9	#6	11"	23'-0	48	#5	5½"	9'-9	6'-6
	5'	10½"	10"	#4	11"	6'-3	#6	11"	13'-0	76	#6	11"	31'-6	7'-0½	4'-2	8"	5'-4	#5	11"	32'-9	#6	11"	23'-0	48	#5	5½"	10'-3	6'-6
	6'	10½"	10"	#4	13"	7'-3	#5	6½"	15'-0	84	#6	13"	31'-6	7'-1½	4'-0	8"	5'-6	#6	13"	32'-9	#7	13"	23'-0	48	#5	6½"	10'-9	6'-6
	7'	10½"	10"	#4	13"	8'-3	#5	6½"	17'-0	92	#6	13"	31'-6	7'-1½	4'-0	8"	5'-6	#6	13"	32'-9	#7	13"	23'-0	48	#5	6½"	11'-3	6'-6
	8'	10½"	10"	#4	13"	9'-3	#6	13"	19'-0	92	#6	13"	31'-6	7'-1½	4'-0	8"	5'-6	#6	13"	32'-9	#7	13"	23'-0	48	#5	6½"	11'-9	6'-6
	9'	10½"	10"	#4	13"	10'-3	#6	13"	21'-0	100	#6	13"	31'-6	7'-1½	4'-0	8"	5'-6	#6	13"	32'-9	#7	13"	23'-0	48	#5	6½"	12'-3	6'-6
	10'	10½"	10"	#4	13"	11'-3	#4	6½"	23'-0	108	#6	13"	31'-6	7'-1½	4'-0	8"	5'-6	#6	13"	32'-9	#7	13"	23'-0	48	#5	6½"	12'-9	6'-6
12'	8'	12½"	12"	#4	11"	9'-6	#5	5½"	20'-0	92	#6	11"	37'-6	8'-2	5'-0	10"	6'-4	#6	11"	39'-6	#7	11"	27'-6	60	#5	5½"	13'-3	7'-8
	9'	12½"	12"	#4	11"	10'-6	#5	5½"	22'-0	100	#6	11"	38'-0	8'-6	5'-0	10"	6'-4	#6	11"	39'-6	#7	11"	27'-6	60	#5	5½"	13'-9	7'-8
	10'	12½"	12"	#4	12"	11'-6	#5	6"	24'-0	108	#7	12"	38'-3	8'-7½	5'-0	10"	6'-4	#6	12"	39'-6	#7	12"	27'-6	60	#5	6"	14'-3	7'-8
	11'	12½"	12"	#4	12"	12'-6	#5	6"	26'-0	108	#7	12"	38'-3	8'-7½	5'-0	10"	6'-4	#6	12"	39'-6	#7	12"	27'-6	60	#5	6"	14'-9	7'-8
	12'	12½"	12"	#4	12"	13'-6	#5	6"	28'-0	116	#7	12"	37'-9	8'-4	5'-0	10"	6'-4	#6	12"	39'-6	#7	12"	27'-6	60	#5	6"	15'-3	7'-8

✠ Total number of bars in the cross-section.

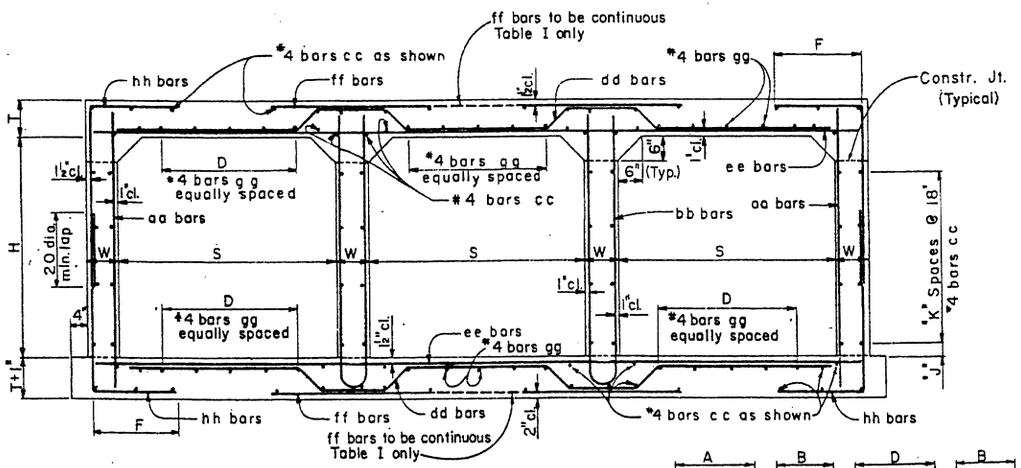

TYPICAL SECTION

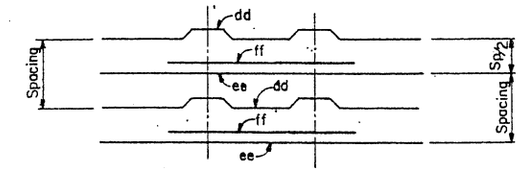

REINFORCING BAR PLACING DIAGRAM
For Table I only

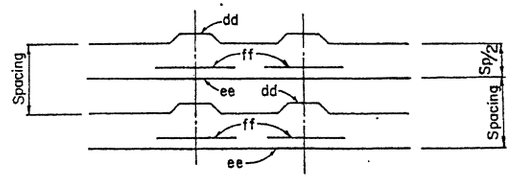

REINFORCING BAR PLACING DIAGRAM
For Tables II through V

Height "H"	"J" Dim.	"K" Spaces
3'	9"	1
4'	3"	2
5'	12"	2
6'	9"	3
7'	3"	4
8'	12"	4
9'	9	5
10'	3"	6
11'	12"	6
12'	9"	7

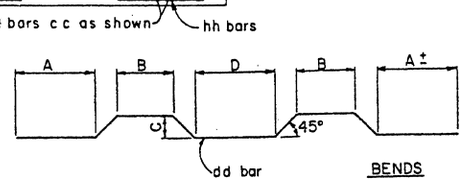

BENDS

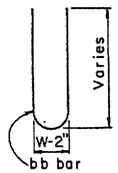

NOTE:
See Std. CB-3A for Tables II thru V.
See Std. CM-1 for general notes and miscellaneous details.
All bend dimensions are out to out of bar.

DESIGN APPROVED R.C. Brechler	STATE OF ARIZONA. DEPARTMENT OF TRANSPORTATION DIVISION OF HIGHWAYS STANDARD DRAWINGS		REVISION 7-76
APPROVED FOR DISTRIBUTION	TRIPLE BARREL BOX CULVERT		STANDARD NO. CB-3
			DRAWING NO. B-2.04

NO.	DESCRIPTION OF REVISIONS	MADE BY	DATE
1	Table I ff bars & quantities	JTW	7-76
2			
3			

DESIGN	DHT	12-71	
DRAWN	CAG	8-72	
CHECKED	RAB	3-73	

TABLE NO. II
10'-15' FILL

Span "S"	Height "H"	Top Slab "T"	Walls "W"	aa			bb			cc	dd							ee			ff			gg	hh			
				Size	Spacing	Length	Size	Spacing	Length	Number⊕	Size	Spacing	Length	A	B	C	D	Size	Spacing	Length	Size	Spacing	Length	Number⊕	Size	Spacing	Length	F
6'	3'	8"	8"	#4	12"	3'-9	#4	12"	8'-0	68	#5	12"	19'-6	4'-4½	2'-6	5"	3'-4	#4	12"	20'-3	#5	12"	4'-9	30	#4	6"	4'-3	1'-9
	4'	8"	8"	#4	12"	4'-9	#4	12"	10'-0	76	#5	12"	20'-0	4'-7½	2'-6	5"	3'-4	#4	12"	20'-3	#5	12"	4'-9	30	#4	6"	4'-9	1'-9
	5'	8"	8"	#4	12"	5'-9	#4	12"	12'-0	76	#5	12"	20'-0	4'-7½	2'-6	5"	3'-4	#4	12"	20'-3	#5	12"	4'-9	30	#4	6"	5'-3	1'-9
	6'	8"	8"	#4	11"	6'-9	#4	11"	14'-0	84	#5	11"	20'-0	4'-7½	2'-6	5"	3'-4	#4	11"	20'-3	#5	11"	4'-9	30	#4	5½"	5'-9	1'-9
	7'	8"	8"	#4	11"	7'-9	#4	11"	16'-0	92	#5	11"	20'-0	4'-7½	2'-6	5"	3'-4	#4	11"	20'-3	#5	11"	4'-9	30	#4	5½"	6'-3	1'-9
8'	3'	10"	9"	#4	12"	4'-3	#4	12"	9'-0	68	#6	12"	26'-0	6'-0	3'-0	7½"	4'-6	#5	12"	26'-6	#6	12"	6'-3	36	#5	6"	5'-0	2'-3
	4'	10"	9"	#4	12"	5'-3	#4	12"	11'-0	76	#6	12"	26'-6	6'-3	3'-0	7½"	4'-6	#5	12"	26'-6	#6	12"	6'-3	36	#4	6"	5'-3	2'-0
	5'	10"	9"	#4	12"	6'-3	#4	12"	13'-0	76	#6	12"	26'-6	6'-3	3'-0	7½"	4'-6	#5	12"	26'-6	#6	12"	6'-3	36	#4	6"	5'-9	2'-0
	6'	10"	9"	#4	12"	7'-3	#4	12"	15'-0	84	#6	12"	26'-6	6'-3	3'-0	7½"	4'-6	#5	12"	26'-6	#6	12"	6'-3	36	#4	6"	6'-3	2'-0
	7'	10"	9"	#4	12"	8'-3	#4	12"	17'-0	92	#6	12"	26'-6	6'-3	3'-0	7½"	4'-6	#5	12"	26'-6	#6	12"	6'-3	36	#4	6"	6'-9	2'-0
	8'	10"	9"	#4	12"	9'-3	#4	12"	19'-0	92	#6	12"	26'-6	6'-3	3'-0	7½"	4'-6	#5	12"	26'-6	#6	12"	6'-3	36	#5	6"	7'-6	2'-3
10'	3'	12"	10"	#4	11"	4'-6	#4	11"	9'-6	68	#6	11"	31'-9	7'-3	3'-6	9½"	5'-9	#5	11"	32'-9	#7	11"	7'-6	42	#5	5½"	5'-3	2'-3
	4'	12"	10"	#4	11"	5'-6	#4	11"	11'-6	76	#6	11"	31'-9	7'-3	3'-6	9½"	5'-9	#5	11"	32'-9	#7	11"	7'-6	42	#5	5½"	5'-9	2'-3
	5'	12½"	10"	#4	11"	6'-6	#4	11"	13'-6	76	#6	11"	32'-3	7'-5	3'-6	10"	5'-8	#5	11"	32'-9	#7	11"	7'-6	42	#5	5½"	6'-3	2'-3
	6'	12½"	10"	#4	11"	7'-6	#4	11"	15'-6	84	#6	11"	32'-3	7'-5	3'-6	10"	5'-8	#5	11"	32'-9	#7	11"	7'-6	42	#4	5½"	6'-9	2'-3
	7'	12½"	10"	#4	11"	8'-6	#4	11"	17'-6	92	#6	11"	32'-3	7'-5	3'-6	10"	5'-8	#5	11"	32'-9	#7	11"	7'-6	42	#4	5½"	7'-3	2'-3
	8'	12½"	10"	#4	13"	9'-6	#4	13"	19'-6	92	#7	13"	33'-0	7'-9	3'-6	10"	5'-8	#6	13"	32'-9	#7	13"	7'-6	42	#5	6½"	7'-9	2'-3
	9'	12½"	10"	#4	13"	10'-6	#4	13"	21'-6	100	#7	13"	33'-0	7'-9	3'-6	10"	5'-8	#6	13"	32'-9	#7	13"	7'-6	42	#5	6½"	8'-3	2'-3
	10'	12½"	10"	#4	13"	11'-6	#4	13"	23'-6	108	#7	13"	33'-0	7'-9	3'-6	10"	5'-8	#6	13"	32'-9	#7	13"	7'-6	42	#5	6½"	9'-0	2'-6
12'	8'	15"	12"	#4	11"	10'-0	#4	11"	20'-6	92	#6	11"	38'-3	8'-6	4'-6	12½"	6'-5	#6	11"	39'-6	#8	11"	9'-0	48	#5	5½"	8'-3	2'-6
	9'	15"	12"	#4	11"	11'-0	#4	11"	22'-6	100	#6	11"	38'-9	8'-8½	4'-6	12½"	6'-5	#6	11"	39'-6	#8	11"	9'-0	48	#5	5½"	8'-9	2'-6
	10'	15"	12"	#4	11"	12'-0	#4	11"	24'-6	108	#6	11"	38'-3	8'-6	4'-6	12½"	6'-5	#6	11"	39'-6	#8	11"	9'-0	48	#5	5½"	9'-6	2'-9
	11'	15"	12"	#4	11"	13'-0	#4	11"	26'-6	108	#6	11"	38'-3	8'-6	4'-6	12½"	6'-5	#6	11"	39'-6	#8	11"	9'-0	48	#5	5½"	10'-0	2'-9
	12'	15"	12"	#4	11	14'-0	#4	11	28'-6	116	#6	11"	38'-3	8'-6	4'-6	12½"	6'-5	#6	11"	39'-6	#8	11"	9'-0	48	#5	5½	10'-9	3'-0

TABLE NO. III
15'-20' FILL

Span "S"	Height "H"	Top Slab "T"	Walls "W"	aa			bb			cc	dd							ee			ff			gg	hh			
				Size	Spacing	Length	Size	Spacing	Length	Number⊕	Size	Spacing	Length	A	B	C	D	Size	Spacing	Length	Size	Spacing	Length	Number⊕	Size	Spacing	Length	F
6'	3'	9"	8"	#4	11"	4'-0	#4	11"	8'-6	68	#5	11"	20'-3	4'-6	2'-6	6½"	3'-1	#4	11"	20'-3	#5	11"	4'-9	24	#4	5½"	4'-3	1'-8
	4'	9"	8"	#4	11"	5'-0	#4	11"	10'-6	76	#5	11"	20'-3	4'-6	2'-6	6½"	3'-1	#4	11"	20'-3	#5	11"	4'-9	24	#4	5½"	4'-9	1'-8
	5'	9"	8"	#4	11"	6'-0	#4	11"	12'-6	76	#5	11"	20'-3	4'-6	2'-6	6½"	3'-1	#4	11"	20'-3	#5	11"	4'-9	24	#4	5½"	5'-3	1'-8
	6'	9"	8"	#4	11"	7'-0	#4	11"	14'-6	84	#5	11"	20'-3	4'-6	2'-6	6½"	3'-1	#4	11"	20'-3	#5	11"	4'-9	24	#4	5½"	5'-9	1'-8
	7'	9"	8"	#4	11"	8'-0	#4	11"	16'-6	92	#5	11"	20'-3	4'-6	2'-6	6½"	3'-1	#4	11"	20'-3	#5	11"	4'-9	24	#4	5½"	6'-3	1'-8
8'	3'	11½"	9"	#4	12"	4'-6	#4	12"	9'-6	68	#6	12"	26'-6	6'-0	3'-0	9"	4'-3	#5	12"	26'-6	#6	12"	6'-3	36	#4	6"	4'-6	1'-9
	4'	11½"	9"	#4	12"	5'-6	#4	12"	11'-6	76	#6	12"	26'-6	6'-0	3'-0	9"	4'-3	#5	12"	26'-6	#6	12"	6'-3	36	#4	6"	5'-0	1'-9
	5'	11½"	9"	#4	13"	6'-6	#4	13"	13'-6	76	#6	13"	26'-6	6'-0	3'-0	9"	4'-3	#5	13"	26'-6	#7	13"	6'-6	36	#5	6½"	6'-0	2'-0
	6'	11½"	9"	#4	13"	7'-6	#4	13"	15'-6	84	#6	13"	26'-6	6'-0	3'-0	9"	4'-3	#5	13"	26'-6	#7	13"	6'-6	36	#5	6½"	6'-6	2'-0
	7'	11½"	9"	#4	13"	8'-6	#4	13"	17'-6	92	#6	13"	26'-6	6'-0	3'-0	9"	4'-3	#5	13"	26'-6	#7	13"	6'-6	36	#5	6½"	7'-0	2'-0
	8'	11½"	9"	#4	13"	9'-6	#4	13"	19'-6	92	#6	13"	26'-6	6'-3	2'-6	9"	4'-9	#5	13"	26'-6	#7	13"	6'-6	36	#5	6½"	7'-9	2'-4
10'	3'	14½"	10"	#4	13"	5'-0	#4	13"	10'-6	68	#6	13"	32'-6	7'-6	3'-0	1'-0	5'-10	#6	13"	32'-9	#8	13"	7'-9	42	#5	6½"	5'-3	2'-0
	4'	14½"	10"	#4	13"	6'-0	#4	13"	12'-6	76	#6	13"	32'-6	7'-6	3'-0	1'-0	5'-10	#6	13"	32'-9	#8	13"	7'-9	42	#5	6½"	5'-9	2'-0
	5'	15"	10"	#4	13"	7'-0	#4	13"	14'-6	76	#6	13"	33'-3	7'-10	3'-0	1'-0½	5'-9	#6	13"	32'-9	#8	13"	7'-9	42	#5	6½"	6'-3	2'-0
	6'	15"	10"	#4	13"	8'-0	#4	13"	16'-6	84	#6	13"	33'-3	7'-10	3'-0	1'-0½	5'-9	#6	13"	32'-9	#8	13"	7'-9	42	#5	6½"	6'-9	2'-0
	7'	15"	10"	#4	13"	9'-0	#4	13"	18'-6	92	#6	13"	33'-3	7'-10	3'-0	1'-0½	5'-9	#6	13"	32'-9	#8	13"	7'-9	42	#5	6½"	7'-3	2'-0
	8'	15"	10"	#4	13"	10'-0	#4	13"	20'-6	92	#6	13"	33'-3	7'-10	3'-0	1'-0½	5'-9	#6	13"	32'-9	#8	13"	7'-9	42	#5	6½"	7'-9	2'-0
	9'	15"	10"	#4	13"	11'-0	#4	13"	22'-6	100	#6	13"	32'-9	7'-7	3'-0	1'-0½	5'-9	#6	13"	32'-9	#8	13"	7'-9	42	#5	6½"	8'-6	2'-4
	10'	15"	10"	#4	12"	12'-0	#4	12"	24'-6	108	#6	12"	32'-9	7'-7	3'-0	1'-0½	5'-9	#6	12"	32'-9	#8	12"	7'-9	42	#5	6"	9'-0	2'-4
12'	8'	18"	12"	#4	12"	10'-6	#4	12"	21'-6	92	#7	12"	39'-6	8'-10	4'-0	1'-3½	6'-5	#6	12"	39'-6	#8	12"	9'-0	48	#5	6"	8'-3	2'-4
	9'	18"	12"	#4	12"	11'-6	#4	12"	23'-6	100	#7	12"	39'-6	8'-10	4'-0	1'-3½	6'-5	#6	12"	39'-6	#8	12"	9'-0	48	#5	6"	9'-0	2'-6
	10'	18"	12"	#4	12"	12'-6	#4	12"	25'-6	108	#7	12"	39'-6	8'-10	4'-0	1'-3½	6'-5	#6	12"	39'-6	#8	12"	9'-0	48	#5	6"	9'-6	2'-6
	11'	18"	12"	#4	12"	13'-6	#4	12"	27'-6	108	#7	12"	39'-6	8'-10	4'-0	1'-3½	6'-5	#6	12"	39'-6	#8	12"	9'-0	48	#5	6"	10'-0	2'-6
	12'	18"	12"	#5	12"	14'-6	#4	12"	29'-6	116	#7	12"	39'-6	8'-10	4'-0	1'-3½	6'-5	#6	12"	39'-6	#8	12"	9'-0	48	#5	6"	11'-0	3'-0

TABLE NO. IV
20'-25' FILL

Span "S"	Height "H"	Top Slab "T"	Walls "W"	aa			bb			cc	dd							ee			ff			gg	hh			
				Size	Spacing	Length	Size	Spacing	Length	Number⊕	Size	Spacing	Length	A	B	C	D	Size	Spacing	Length	Size	Spacing	Length	Number⊕	Size	Spacing	Length	F
6'	3'	10½"	8"	#4	11"	4'-3	#4	11"	9'-0	68	#5	11"	21'-0	4'-8	2'-6	8"	2'-10	#4	11"	20'-3	#5	11"	5'-3	24	#4	5½"	4'-3	1'-6
	4'	10½"	8"	#4	11"	5'-3	#4	11"	11'-0	76	#5	11"	21'-0	4'-8	2'-6	8"	2'-10	#4	11"	20'-3	#5	11"	5'-3	24	#4	5½"	4'-9	1'-6
	5'	10½"	8"	#4	11"	6'-3	#4	11"	13'-0	76	#5	11"	21'-0	4'-8	2'-6	8"	2'-10	#4	11"	20'-3	#5	11"	5'-3	24	#4	5½"	5'-3	1'-6
	6'	10½"	8"	#4	11"	7'-3	#4	11"	15'-0	84	#5	11"	21'-0	4'-8	2'-6	8"	2'-10	#4	11"	20'-3	#5	11"	4'-9	24	#4	5½"	6'-0	1'-9
	7'	10½"	8"	#4	11"	8'-3	#4	11"	17'-0	92	#5	11"	21'-0	4'-8	2'-6	8"	2'-10	#4	11"	20'-3	#5	11"	4'-9	24	#4	5½"	6'-6	1'-9
8'	3'	13½"	9"	#4	11"	4'-9	#4	11"	10'-0	68	#5	11"	27'-0	5'-11	3'-0	11"	3'-11	#5	11"	26'-6	#7	11"	6'-6	30	#4	5½"	4'-6	1'-6
	4'	13½"	9"	#4	11"	5'-9	#4	11"	12'-0	76	#5	11"	27'-0	5'-11	3'-0	11"	3'-11	#5	11"	26'-6	#7	11"	6'-6	30	#4	5½"	5'-0	1'-6
	5'	13½"	9"	#4	11"	6'-9	#4	11"	14'-0	76	#5	11"	27'-0	5'-11	3'-0	11"	3'-11	#5	11"	26'-6	#7	11"	6'-6	30	#4	5½"	5'-6	1'-6
	6'	13½"	9"	#4	11"	7'-9	#4	11"	16'-0	84	#5	11"	27'-0	5'-11	3'-0	11"	3'-11	#5	11"	26'-6	#7	11"	6'-6	30	#4	5½"	6'-3	1'-9
	7'	13½"	9"	#4	11"	8'-9	#4	11"	18'-0	92	#5	11"	27'-0	5'-11	3'-0	11"	3'-11	#5	11"	26'-6	#7	11"	6'-6	30	#4	5½"	6'-9	1'-9
	8'	13½"	9"	#4	12"	9'-9	#4	12"	20'-0	92	#5	12"	27'-0	5'-11	3'-0	11"	3'-11	#5	12"	26'-6	#7	12"	6'-6	30	#5	6"	7'-3	1'-9
10'	3'	16½"	10"	#4	12"	5'-3	#4	12"	11'-0	68	#6	12"	33'-6	7'-8	3'-0	1'-2	5'-6	#6	12"	32'-9	#8	12"	7'-9	42	#5	6"	5'-0	1'-9
	4'	17"	10"	#4	12"	6'-3	#4	12"	13'-0	76	#6	12"	33'-6	7'-7	3'-0	1'-2½	5'-5	#6	12"	32'-9	#8	12"	7'-9	42	#4	6"	5'-6	1'-9
	5'	17"	10"	#4	12"	7'-3	#4	12"	15'-0	76	#6	12"	33'-6	7'-7	3'-0	1'-2½	5'-5	#6	12"	32'-9	#8	12"	7'-9	42	#4	6"	6'-0	1'-9
	6'	17"	10"	#4	12"	8'-3	#4	12"	17'-0	84	#6	12"	33'-6	7'-7	3'-0	1'-2½	5'-5	#6	12"	32'-9	#8	12"	7'-9	42	#4	6"	6'-6	1'-9
	7'	17"	10"	#4	12"	9'-3	#4	12"	19'-0	92	#6	12"	33'-6	7'-7	3'-0	1'-2½	5'-5	#6	12"	32'-9	#8	12"	7'-9	42	#4	6"	7'-3	2'-0
	8'	17"	10"	#4	12"	10'-3	#4	12"	21'-0	92	#6	12"	33'-6	7'-7	3'-0	1'-2½	5'-5	#6	12"	32'-9	#8	12"	7'-9	42	#5	6"	8'-0	2'-0
	9'	17"	10"	#4	12"	11'-3	#4	12"	23'-0	100	#6	12"	33'-6	7'-7	3'-0	1'-2½	5'-5	#6	12"	32'-9	#8	12"	7'-9	42	#5	6"	8'-6	2'-0
	10'	17"	10"	#5	12"	12'-3	#4	12"	25'-0	108	#6	12"	33'-6	7'-7	3'-0	1'-2½	5'-5	#6	12"	32'-9	#8	12"	7'-9	42	#5	6"	9'-0	2'-3
12'	8'	20½"	12"	#4	15"	11'-0	#4	15"	22'-6	92	#6	10"	40'-0	8'-9	4'-0	1'-6	6'-0	#6	10"	39'-6	#8	10"	9'-0	42	#4	5"	8'-3	2'-2
	9'	20½"	12"	#4	15"	12'-0	#4	15"	24'-6	100	#6	10"	40'-0	8'-9	4'-0	1'-6	6'-0	#6	10"	39'-6	#8	10"	9'-0	42	#5	5"	9'-0	2'-4
	10'	20½"	12"	#4	10"	13'-0	#4	15"	26'-6	108	#6	10"	40'-0	8'-9	4'-0	1'-6	6'-0	#6	10"	39'-6	#8	10"	9'-0	42	#5	5"	9'-9	2'-6
	11'	20½"	12"	#4	10"	14'-0	#4	15"	28'-6	108	#6	10"	39'-6	8'-6	4'-0	1'-6	6'-0	#6	10"	39'-6	#8	10"	9'-0	42	#5	5"	10'-3	2'-6
	12'	20½"	12"	#5	10"	15'-0	#4	15"	30'-6	116	#6	10"	39'-6	8'-6	4'-0	1'-6	6'-0	#6	10"	39'-6	#8	10"	9'-0	42	#5	5"	11'-0	2'-9

TABLE NO. V
25'-30' FILL

Span "S"	Height "H"	Top Slab "T"	Walls "W"	aa			bb			cc	dd							ee			ff			gg	hh			
				Size	Spacing	Length	Size	Spacing	Length	Number⊕	Size	Spacing	Length	A	B	C	D	Size	Spacing	Length	Size	Spacing	Length	Number⊕	Size	Spacing	Length	F
6'	3'	11½"	8"	#4	15"	4'-6	#4	15"	9'-6	68	#5	10"	21'-0	4'-9½	2'-0	9"	3'-2	#4	10"	20'-3	#5	10"	5'-3	24	#4	5"	4'-3	1'-6
	4'	11½"	8"	#4	15"	5'-6	#4	15"	11'-6	76	#5	10"	21'-0	4'-9½	2'-0	9"	3'-2	#4	10"	20'-3	#5	10"	5'-3	24	#4	5"	4'-9	1'-6
	5'	11½"	8"	#4	15"	6'-6	#4	15"	13'-6	76	#5	10"	21'-0	4'-9½	2'-0	9"	3'-2	#4	10"	20'-3	#5	10"	5'-3	24	#4	5"	5'-3	1'-6
	6'	11½"	8"	#4	15"	7'-6	#4	15"	15'-6	84	#5	10"	21'-0	4'-9½	2'-0	9"	3'-2	#4	10"	20'-3	#5	10"	4'-9	24	#4	5"	6'-0	1'-9
	7'	11½"	8"	#4	10"	8'-6	#4	15"	17'-6	92	#5	10"	21'-0	4'-9½	2'-0	9"	3'-2	#4	10"	20'-3	#5	10"	4'-9	24	#4	5"	6'-6	1'-9
8'	3'	15½"	9"	#4	11"	5'-0	#4	11"	10'-9	68	#5	11"	27'-3	5'-9	3'-0	1'-1	3'-7	#5	11"	26'-6	#7	11"	7'-0	30	#4	5½"	4'-9	1'-8
	4'	15½"	9"	#4	11"	6'-0	#4	11"	12'-9	76	#5	11"	27'-3	5'-9	3'-0	1'-1	3'-7	#5	11"	26'-6	#7	11"	7'-0	30	#4	5½"	5'-3	1'-8
	5'	15½"	9"	#4	11"	7'-0	#4	11"	14'-9	76	#5	11"	27'-3	5'-9	3'-0	1'-1	3'-7	#5	11"	26'-6	#7	11"	6'-6	30	#4	5½"	5'-9	1'-8
	6'	15½"	9"	#4	11"	8'-0	#4	11"	16'-9	84	#5	11"	27'-3	5'-9	3'-0	1'-1	3'-7	#5	11"	26'-6	#7	11"	6'-6	30	#4	5½"	6'-3	1'-8
	7'	15½"	9"	#4	11"	9'-0	#4	11"	18'-9	92	#5	11"	27'-3	5'-9	3'-0	1'-1	3'-7	#5	11"	26'-6	#7	11"	6'-6	30	#4	5½"	7'-0	1'-10
	8'	15½"	9"	#4	11"	10'-0	#4	11"	20'-9	92	#5	11"	27'-3	5'-9	3'-0	1'-1	3'-7	#5	11"	26'-6	#7	11"	6'-6	30	#5	5½"	7'-9	2'-0
10'	3'	19"	10"	#4	11"	5'-9	#4	11"	11'-9	68	#6	11"	33'-9	7'-5	3'-0	1'-4½	5'-1	#6	11"	32'-9	#8	11"	7'-9	36	#4	5½"	5'-0	1'-7
	4'	19"	10"	#4	11"	6'-9	#4	11"	13'-9	76	#6	11"	33'-9	7'-5	3'-0	1'-4½	5'-1	#6	11"	32'-9	#8	11"	7'-9	36	#4	5½"	5'-6	1'-7
	5'	19"	10"	#4	11"	7'-9	#4	11"	15'-9	76	#6	11"	33'-9	7'-5	3'-0	1'-4½	5'-1	#6	11"	32'-9	#8	11"	7'-9	36	#4	5½"	6'-0	1'-7
	6'	19"	10"	#4	11"	8'-9	#4	11"	17'-9	84	#6	11"	33'-9	7'-5	3'-0	1'-4½	5'-1	#6	11"	32'-9	#8	11"	7'-9	36	#4	5½"	6'-6	1'-7
	7'	19"	10"	#4	11"	9'-9	#4	11"	19'-9	92	#6	11"	33'-9	7'-5	3'-0	1'-4½	5'-1	#6	11"	32'-9	#8	11"	7'-9	36	#4	5½"	7'-0	1'-7
	8'	19"	10"	#4	13"	10'-9	#4	13"	21'-9	92	#7	13"	34'-3	7'-8	3'-0	1'-4½	5'-1	#6	13"	32'-9	#8	13"	7'-9	36	#5	6½"	8'-0	2'-0
	9'	19"	10"	#5	13"	11'-9	#4	13"	23'-9	100	#7	13"	34'-3	7'-8	3'-0	1'-4½	5'-1	#6	13"	32'-9	#8	13"	7'-9	36	#5	6½"	8'-6	2'-0
	10'	19"	10"	#5	11"	12'-9	#4	11"	25'-9	108	#6	11"	33'-9	7'-5	3'-0	1'-4½	5'-1	#6	11"	32'-9	#8	11"	7'-9	36	#5	5½"	9'-3	2'-3
12'	8'	23"	12"	#4	10"	11'-3	#4	15"	23'-0	92	#6	10"	40'-3	8'-6	4'-0	1'-8½	5'-7	#6	10"	39'-6	#8	10"	9'-0	42	#4	5"	8'-3	2'-0
	9'	23"	12"	#4	10"	12'-3	#4	15"	25'-0	100	#6	10"	40'-3	8'-6	4'-0	1'-8½	5'-7	#6	10"	39'-6	#8	10"	9'-0	42	#5	5"	9'-3	2'-4
	10'	23"	12"	#4	10"	13'-3	#4	15"	27'-0	108	#6	10"	40'-3	8'-6	4'-0	1'-8½	5'-7	#6	10"	39'-6	#8	10"	9'-0	42	#5	5"	9'-9	2'-4
	11'	23"	12"	#5	10"	14'-3	#4	15"	29'-0	108	#6	10"	40'-3	8'-6	4'-0	1'-8½	5'-7	#6	10"	39'-6	#8	10"	9'-0	42	#5	5"	10'-6	2'-8
	12'	23"	12"	#6	10"	15'-3	#4	15"	31'-0	116	#6	10"	39'-9	8'-3	4'-0	1'-8½	5'-7	#6	10"	39'-6	#8	10"	9'-0	42	#5	5"	11'-0	2'-8

⊕ Total number of bars in the cross-section.

NOTE:

See Std. CB-3 for Table No. I, typical section, steel call outs, bend diagrams and quantities.

See Std. CM-1 for general notes and miscellaneous details.

DESIGN	DHY
DRAWN	CAO
CHECKED	NAB

DATE	NO.	DESCRIPTION OF REVISIONS	MADE BY	DATE
12-71	①	Table II, 6' Span, T now 8"	JTW	7-76
8-72	②			
3-73	③			

DESIGN APPROVED	STATE OF ARIZONA DEPARTMENT OF TRANSPORTATION DIVISION OF HIGHWAYS STANDARD DRAWINGS	REVISION 7-76
R. C. Buchler		STANDARD NO. CB-3A
APPROVED FOR DISTRIBUTION	TRIPLE BARREL BOX CULVERT	DRAWING NO. B-2.05

QUANTITIES PER LIN. FOOT OF BARRELS

Span "S"	Height "H"	Table I Concrete C.Y.	Table I Reinf. Steel Lbs.	Table II Concrete C.Y.	Table II Reinf. Steel Lbs.	Table III Concrete C.Y.	Table III Reinf. Steel - Lbs.	Table IV Concrete C.Y.	Table IV Reinf. Steel Lbs.	Table V Concrete C.Y.	Table V Reinf. Steel Lbs.
6'	3'	1.860	310.5	1.860	251.7	2.031	265.2	2.287	271.7	2.458	283.7
	4'	1.984	315.8	1.984	267.4	2.154	280.6	2.411	287.2	2.583	297.9
	5'	2.107	324.5	2.107	275.4	2.278	289.3	2.534	295.9	2.705	305.4
	6'	2.231	339.9	2.231	307.5	2.401	304.8	2.657	309.4	2.828	317.4
	7'	2.354	355.3	2.354	322.9	2.525	320.2	2.781	324.8	2.952	336.1
8'	3'	2.459	427.7	2.794	395.7	3.128	381.6	3.573	394.7	4.019	406.0
	4'	2.598	488.8	2.932	395.5	3.267	396.3	3.712	410.2	4.157	421.5
	5'	2.849	473.3	3.071	403.6	3.405	421.4	3.851	418.9	4.296	423.5
	6'	2.987	491.6	3.210	418.3	3.544	436.8	3.990	435.8	4.435	438.9
	7'	3.126	509.8	3.349	433.0	3.683	452.3	4.129	451.2	4.574	455.8
	8'	3.265	522.7	3.488	464.8	3.822	463.0	4.268	452.2	4.712	490.8
10'	3'	3.385	606.5	3.935	515.8	4.621	525.7	5.171	563.7	5.858	588.5
	4'	3.677	632.8	4.089	532.8	4.776	541.2	5.462	564.2	6.012	604.0
	5'	3.831	629.3	4.381	544.9	5.067	552.0	5.617	572.2	6.166	612.7
	6'	3.986	667.0	4.535	539.8	5.222	567.5	5.771	586.9	6.321	628.1
	7'	4.140	690.3	4.689	555.3	5.376	582.9	5.925	602.9	6.475	643.6
	8'	4.294	676.2	4.844	601.8	5.530	591.7	6.080	636.3	6.629	641.3
	9'	4.449	696.3	4.998	617.2	5.685	607.7	6.234	652.5	6.783	664.9
	10'	4.603	705.8	5.152	634.6	5.839	664.3	6.387	675.6	6.938	728.2
12'	8'	5.799	925.7	6.622	760.7	7.610	773.7	8.434	780.2	9.256	789.1
	9'	5.985	953.7	6.808	780.2	7.795	791.9	8.618	828.4	9.441	840.3
	10'	6.170	967.4	6.993	797.1	7.981	808.1	8.804	853.8	9.627	856.8
	11'	6.355	985.4	7.178	807.5	8.166	817.6	8.989	861.8	9.812	881.9
	12'	6.540	1008.1	7.363	826.8	8.351	848.9	9.174	880.8	9.997	914.3

TABLE NO. I
0'-10' FILL

Span "S"	Height "H"	Top Slab "T"	Walls "W"	aa Size	aa Spacing	aa Length	bb Size	bb Spacing	bb Length	cc Number ⌖	dd Size	dd Spacing	dd Length	dd A	dd B	dd C	dd D	ee Size	ee Spacing	ee Length	ff Size	ff Spacing	ff Length	gg Number ⌖	hh Size	hh Spacing	hh Length	hh F
6'	3'	8"	8"	#4	11"	3'-9	#5	11"	8'-3	88	#4	11"	27'-9	5'-1	2'-3	5½"	3'-6	#5	11"	14'-0	#5	11"	21'-0	40	#4	5½"	6'-9	4'-2
	4'	8"	8"	#4	11"	4'-9	#4	11"	10'-3	98	#4	11"	27'-9	5'-1	2'-3	5½"	3'-6	#5	11"	14'-0	#5	11"	21'-0	40	#4	5½"	7'-3	4'-2
	5'	8"	8"	#4	11"	5'-9	#4	11"	12'-3	98	#4	11"	27'-9	5'-1	2'-3	5½"	3'-6	#5	11"	14'-0	#5	11"	21'-0	40	#4	5½"	7'-9	4'-2
	6'	8"	8"	#4	11"	6'-9	#4	11"	14'-3	108	#4	11"	27'-9	5'-1	2'-3	5½"	3'-6	#5	11"	14'-0	#5	11"	21'-0	40	#4	5½"	8'-3	4'-2
	7'	8"	8"	#4	11"	7'-9	#4	11"	16'-3	118	#4	11"	27'-9	5'-1	2'-3	5½"	3'-6	#5	11"	14'-0	#5	11"	21'-0	40	#4	5½"	8'-9	4'-2
8'	3'	8½"	9"	#4	12"	4'-0	#4	6"	8'-6	88	#5	12"	34'-6	5'-8	3'-4	6"	4'-5	#5	12"	18'-3	#6	12"	27'-6	48	#5	6"	8'-0	5'-3
	4'	8½"	9"	#4	12"	5'-0	#4	6"	10'-6	98	#5	12"	34'-9	5'-10	3'-4	6"	4'-5	#6	12"	18'-6	#6	12"	27'-6	56	#5	6"	8'-6	5'-3
	5'	9"	9"	#4	14"	6'-0	#4	7"	12'-6	98	#6	14"	35'-0	6'-0	3'-0	6½"	4'-8	#6	14"	18'-6	#6	14"	27'-6	56	#5	7"	9'-0	5'-3
	6'	9"	9"	#4	14"	7'-0	#4	7"	14'-6	108	#6	14"	35'-0	6'-0	3'-0	6½"	4'-8	#6	14"	18'-6	#6	14"	27'-6	56	#5	7"	9'-6	5'-3
	7'	9"	9"	#4	14"	8'-0	#4	7"	16'-6	118	#6	14"	35'-0	5'-10	3'-4	6½"	4'-4	#6	14"	18'-6	#6	14"	27'-6	56	#5	7"	10'-0	5'-3
	8'	9"	9"	#4	14"	9'-0	#4	7"	18'-6	118	#6	14"	35'-6	6'-2	3'-4	6½"	4'-4	#6	14"	18'-6	#6	14"	27'-6	56	#5	7"	10'-6	5'-3
10'	3'	10"	10"	#4	11"	4'-3	#5	5½"	9'-0	88	#6	11"	42'-6	6'-11	4'-2	7½"	5'-5	#5	11"	22'-6	#6	11"	34'-0	64	#5	5½"	9'-3	6'-6
	4'	10½"	10"	#4	11"	5'-3	#5	5½"	11'-0	98	#6	11"	42'-6	6'-10	4'-2	8"	5'-4	#5	11"	22'-6	#6	11"	34'-0	64	#5	5½"	9'-9	6'-6
	5'	10½"	10"	#4	11"	6'-3	#6	11"	13'-0	98	#6	11"	43'-0	7'-1	4'-2	8"	5'-4	#5	11"	22'-6	#6	11"	34'-0	64	#5	5½"	10'-3	6'-6
	6'	10½"	10"	#4	13"	7'-3	#5	6½"	15'-0	108	#6	13"	43'-0	7'-2	4'-0	8"	5'-6	#6	13"	22'-9	#7	13"	34'-0	64	#5	6½"	10'-9	6'-6
	7'	10½"	10"	#4	13"	8'-3	#5	6½"	17'-0	118	#6	13"	43'-0	7'-2	4'-0	8"	5'-6	#6	13"	22'-9	#7	13"	34'-0	64	#5	6½"	11'-3	6'-6
	8'	10½"	10"	#4	13"	9'-3	#6	13"	19'-0	118	#6	13"	43'-0	7'-2	4'-0	8"	5'-6	#6	13"	22'-9	#7	13"	34'-0	64	#5	6½"	11'-9	6'-6
	9'	10½"	10"	#4	13"	10'-3	#6	13"	21'-0	128	#6	13"	43'-0	7'-2	4'-0	8"	5'-6	#6	13"	22'-9	#7	13"	34'-0	64	#5	6½"	12'-3	6'-6
	10'	10½"	10"	#4	13"	11'-3	#4	6½"	23'-0	138	#6	13"	43'-0	7'-2	4'-0	8"	5'-6	#6	13"	22'-9	#7	13"	34'-0	64	#5	6½"	12'-9	6'-6
12'	8'	12½"	12"	#4	11"	9'-6	#5	5½"	20'-0	118	#6	11"	51'-0	8'-2	5'-0	10"	6'-4	#6	11"	27'-0	#7	11"	40'-0	80	#5	5½"	13'-3	7'-8
	9'	12½"	12"	#4	11"	10'-6	#5	5½"	22'-0	128	#6	11"	51'-6	8'-5	5'-0	10"	6'-4	#6	11"	27'-0	#7	11"	40'-0	80	#5	5½"	13'-9	7'-8
	10'	12½"	12"	#4	12"	11'-6	#5	6"	24'-0	138	#7	12"	51'-9	8'-6	5'-0	10"	6'-4	#6	12"	27'-0	#7	12"	40'-0	80	#5	6"	14'-3	7'-8
	11'	12½"	12"	#4	12"	12'-6	#5	6"	26'-0	138	#7	12"	51'-9	8'-6	5'-0	10"	6'-4	#6	12"	27'-0	#7	12"	40'-0	80	#5	6"	14'-9	7'-8
	12'	12½"	12"	#4	12"	13'-6	#5	6"	28'-0	148	#7	12"	51'-3	8'-3	5'-0	10"	6'-4	#6	12"	27'-0	#7	12"	40'-0	80	#5	6"	15'-3	7'-8

⌖ Total number of bars in the cross-section.

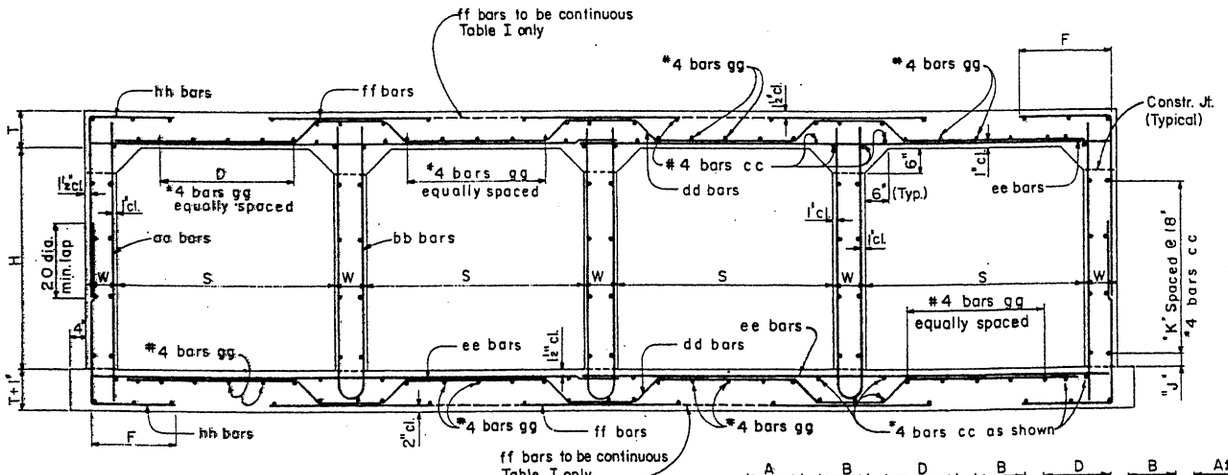

TYPICAL SECTION

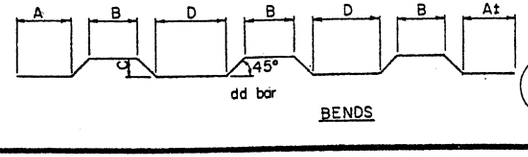

BENDS

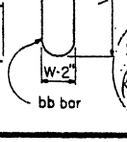

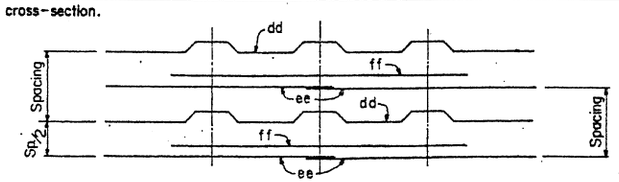

REINFORCING BAR PLACING DIAGRAM
For Table I only

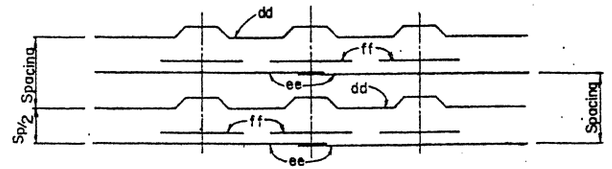

REINFORCING BAR PLACING DIAGRAM
For Tables II through V

Height "H"	"J" Dim.	"K" Spaces
3'	9"	1
4'	3"	2
5'	12"	2
6'	9"	3
7'	3"	4
8'	12"	4
9'	9"	5
10'	3"	6
11'	12"	6
12'	9"	7

NOTE:
See Std. CB-4A for Tables II thru V
See Std. CM-1 for general notes and miscellaneous details.
All bend dimensions are out to out of bar.

DESIGN				DATE	DESCRIPTION OF REVISIONS	NO.	DATE	MADE BY	DATE
DRAWN	CAG	12-71			Table I, ff bars & quantities	(1)	7-76	J.T.W.	7-76
CHECKED	RAB	9-72				(2)			
		3-73				(3)			

DESIGN APPROVED: R. C. Breedlove
APPROVED FOR DISTRIBUTION: E. J. Bendlin

STATE OF ARIZONA
DEPARTMENT OF TRANSPORTATION
DIVISION OF HIGHWAYS
STANDARD DRAWINGS

FOUR BARREL
BOX CULVERT

REVISION 7-76
STANDARD NO. CB-4
DRAWING NO. B-2.06

TABLE NO. II
10'-15' FILL

Span "S"	Height "H"	Top Slab "T"	Walls "W"	aa			bb			cc	dd							ee			ff			gg	hh			
				Size	Spacing	Length	Size	Spacing	Length	Number⊕	Size	Spacing	Length	A	B	C	D	Size	Spacing	Length	Size	Spacing	Length	Number⊕	Size	Spacing	Length	F
6'	3'	8"	8"	#4	12"	3'-9	#4	12"	8'-0	88	#5	12"	26'-6	4'-5	2'-6	5"	3'-4	#4	12"	14'-0	#5	12"	4'-9	40	#4	6"	4'-3	1'-9
	4'	8"	8"	#4	12"	4'-9	#4	12"	10'-0	98	#5	12"	27'-0	4'-8	2'-6	5"	3'-4	#4	12"	14'-0	#5	12"	4'-9	40	#4	6"	4'-9	1'-9
	5'	8"	8"	#4	12"	5'-9	#4	12"	12'-0	98	#5	12"	27'-0	4'-8	2'-6	5"	3'-4	#4	12"	14'-0	#5	12"	4'-9	40	#4	6"	5'-3	1'-9
	6'	8"	8"	#4	11"	6'-9	#4	11"	14'-0	108	#5	11"	27'-0	4'-8	2'-6	5"	3'-4	#4	11"	14'-0	#5	11"	4'-9	40	#4	5½"	5'-9	1'-9
	7'	8"	8"	#4	11"	7'-9	#4	11"	16'-0	118	#5	11"	27'-0	4'-8	2'-6	5"	3'-4	#4	11"	14'-0	#5	11"	4'-9	40	#4	5½"	6'-3	1'-9
8'	3'	10"	9"	#4	12"	4'-3	#4	12"	9'-0	88	#6	12"	35'-3	6'-0	3'-0	7½"	4'-6	#5	12"	18'-6	#6	12"	6'-3	48	#5	6"	5'-0	2'-3
	4'	10"	9"	#4	12"	5'-3	#4	12"	11'-0	98	#6	12"	35'-9	6'-3	3'-0	7½"	4'-6	#5	12"	18'-6	#6	12"	6'-3	48	#4	6"	5'-3	2'-0
	5'	10"	9"	#4	12"	6'-3	#4	12"	13'-0	98	#6	12"	35'-9	6'-3	3'-0	7½"	4'-6	#5	12"	18'-6	#6	12"	6'-3	48	#4	6"	5'-9	2'-0
	6'	10"	9"	#4	12"	7'-3	#4	12"	15'-0	108	#6	12"	35'-9	6'-3	3'-0	7½"	4'-6	#5	12"	18'-6	#6	12"	6'-3	48	#4	6"	6'-3	2'-0
	7'	10"	9"	#4	12"	8'-3	#4	12"	17'-0	118	#6	12"	35'-9	6'-3	3'-0	7½"	4'-6	#5	12"	18'-6	#6	12"	6'-3	48	#4	6"	6'-9	2'-0
	8'	10"	9"	#4	12"	9'-3	#4	12"	19'-0	118	#6	12"	35'-9	6'-3	3'-0	7½"	4'-6	#5	12"	18'-6	#6	12"	6'-3	48	#5	6"	7'-6	2'-3
10'	3'	12"	10"	#4	11"	4'-6	#4	11"	9'-6	88	#6	11"	43'-3	7'-3	3'-6	9½"	5'-9	#5	11"	22'-6	#7	11"	7'-6	56	#5	5½"	5'-3	2'-3
	4'	12"	10"	#4	11"	5'-6	#4	11"	11'-6	98	#6	11"	43'-3	7'-3	3'-6	9½"	5'-9	#5	11"	22'-6	#7	11"	7'-6	56	#5	5½"	5'-9	2'-3
	5'	12½"	10"	#4	11"	6'-6	#4	11"	13'-6	98	#6	11"	43'-9	7'-5	3'-6	10"	5'-8	#5	11"	22'-6	#7	11"	7'-6	56	#5	5½"	6'-3	2'-3
	6'	12½"	10"	#4	11"	7'-6	#4	11"	15'-6	108	#6	11"	43'-9	7'-5	3'-6	10"	5'-8	#5	11"	22'-6	#7	11"	7'-6	56	#4	5½"	6'-9	2'-3
	7'	12½"	10"	#4	11"	8'-6	#4	11"	17'-6	118	#6	11"	43'-9	7'-5	3'-6	10"	5'-8	#5	11"	22'-6	#7	11"	7'-6	56	#4	5½"	7'-3	2'-3
	8'	12½"	10"	#4	13"	9'-6	#4	13"	19'-6	118	#7	13"	44'-3	7'-8	3'-6	10"	5'-8	#6	13"	22'-9	#7	13"	7'-6	56	#5	6½"	7'-9	2'-3
	9'	12½"	10"	#4	13"	10'-6	#4	13"	21'-6	128	#7	13"	44'-3	7'-8	3'-6	10"	5'-8	#6	13"	22'-9	#7	13"	7'-6	56	#5	6½"	8'-3	2'-3
	10'	12½"	10"	#4	13"	11'-6	#4	13"	23'-6	138	#7	13"	44'-3	7'-8	3'-6	10"	5'-8	#6	13"	22'-9	#7	13"	7'-6	56	#5	6½"	9'-0	2'-6
12'	8'	15"	12"	#4	11"	10'-0	#4	11"	20'-6	118	#6	11"	52'-0	8'-5	4'-6	12½"	6'-5	#6	11"	27'-0	#8	11"	9'-0	64	#5	5½"	8'-3	2'-6
	9'	15"	12"	#4	11"	11'-0	#4	11"	22'-6	128	#6	11"	52'-9	8'-9	4'-6	12½"	6'-5	#6	11"	27'-0	#8	11"	9'-0	64	#5	5½"	8'-9	2'-6
	10'	15"	12"	#4	11"	12'-0	#4	11"	24'-6	138	#6	11"	52'-0	8'-5	4'-6	12½"	6'-5	#6	11"	27'-0	#8	11"	9'-0	64	#5	5½"	9'-6	2'-9
	11'	15"	12"	#4	11"	13'-0	#4	11"	26'-6	138	#6	11"	52'-0	8'-5	4'-6	12½"	6'-5	#6	11"	27'-0	#8	11"	9'-0	64	#5	5½"	10'-0	2'-9
	12'	15"	12"	#4	11"	14'-0	#4	11"	28'-6	148	#6	11"	52'-0	8'-5	4'-6	12½"	6'-5	#6	11"	27'-0	#8	11"	9'-0	64	#5	5½"	10'-9	3'-0

TABLE NO. III
15'-20' FILL

Span "S"	Height "H"	Top Slab "T"	Walls "W"	aa			bb			cc	dd							ee			ff			gg	hh			
				Size	Spacing	Length	Size	Spacing	Length	Number⊕	Size	Spacing	Length	A	B	C	D	Size	Spacing	Length	Size	Spacing	Length	Number⊕	Size	Spacing	Length	F
6'	3'	9"	8"	#4	11"	4'-0	#4	11"	8'-6	88	#5	11"	27'-6	4'-7	2'-6	6½"	3'-1	#4	11"	14'-0	#5	11"	4'-9	32	#4	5½"	4'-3	1'-8
	4'	9"	8"	#4	11"	5'-0	#4	11"	10'-6	98	#5	11"	27'-6	4'-7	2'-6	6½"	3'-1	#4	11"	14'-0	#5	11"	4'-9	32	#4	5½"	4'-9	1'-8
	5'	9"	8"	#4	11"	6'-0	#4	11"	12'-6	98	#5	11"	27'-6	4'-7	2'-6	6½"	3'-1	#4	11"	14'-0	#5	11"	4'-9	32	#4	5½"	5'-3	1'-8
	6'	9"	8"	#4	11"	7'-0	#4	11"	14'-6	108	#5	11"	27'-6	4'-7	2'-6	6½"	3'-1	#4	11"	14'-0	#5	11"	4'-9	32	#4	5½"	5'-9	1'-8
	7'	9"	8"	#4	11"	8'-0	#4	11"	16'-6	118	#5	11"	27'-6	4'-7	2'-6	6½"	3'-1	#4	11"	14'-0	#5	11"	4'-9	32	#4	5½"	6'-3	1'-8
8'	3'	11½"	9"	#4	12"	4'-6	#4	12"	9'-6	88	#6	12"	36'-0	6'-1	3'-0	9"	4'-3	#5	12"	18'-6	#6	12"	6'-3	48	#4	6"	4'-6	1'-9
	4'	11½"	9"	#4	12"	5'-6	#4	12"	11'-6	98	#6	12"	36'-0	6'-1	3'-0	9"	4'-3	#5	12"	18'-6	#6	12"	6'-3	48	#4	6"	5'-0	1'-9
	5'	11½"	9"	#4	13"	6'-6	#4	13"	13'-6	98	#6	13"	36'-0	6'-1	3'-0	9"	4'-3	#5	13"	18'-6	#7	13"	6'-6	48	#5	6½"	6'-0	2'-0
	6'	11½"	9"	#4	13"	7'-6	#4	13"	15'-6	108	#6	13"	36'-0	6'-1	3'-0	9"	4'-3	#5	13"	18'-6	#7	13"	6'-6	48	#5	6½"	6'-6	2'-0
	7'	11½"	9"	#4	13"	8'-6	#4	13"	17'-6	118	#6	13"	36'-0	6'-1	3'-0	9"	4'-3	#5	13"	18'-6	#7	13"	6'-6	48	#5	6½"	7'-0	2'-0
	8'	11½"	9"	#4	13"	9'-6	#4	13"	19'-6	118	#6	13"	36'-0	6'-4	2'-6	9"	4'-9	#5	13"	18'-6	#7	13"	6'-6	48	#5	6½"	7'-9	2'-4
10'	3'	14½"	10"	#4	13"	5'-0	#4	13"	10'-6	88	#6	13"	44'-3	7'-7	3'-0	1'-0	5'-10	#6	13"	22'-9	#8	13"	7'-9	56	#5	6½"	5'-3	2'-0
	4'	14½"	10"	#4	13"	6'-0	#4	13"	12'-6	98	#6	13"	44'-3	7'-7	3'-0	1'-0	5'-10	#6	13"	22'-9	#8	13"	7'-9	56	#5	6½"	5'-9	2'-0
	5'	15"	10"	#4	13"	7'-0	#4	13"	14'-6	98	#6	13"	45'-0	7'-10	3'-0	1'-0½	5'-9	#6	13"	22'-9	#8	13"	7'-9	56	#5	6½"	6'-3	2'-0
	6'	15"	10"	#4	13"	8'-0	#4	13"	16'-6	108	#6	13"	45'-0	7'-10	3'-0	1'-0½	5'-9	#6	13"	22'-9	#8	13"	7'-9	56	#5	6½"	6'-9	2'-0
	7'	15"	10"	#4	13"	9'-0	#4	13"	18'-6	118	#6	13"	45'-0	7'-10	3'-0	1'-0½	5'-9	#6	13"	22'-9	#8	13"	7'-9	56	#5	6½"	7'-3	2'-0
	8'	15"	10"	#4	13"	10'-0	#4	13"	20'-6	118	#6	13"	45'-0	7'-10	3'-0	1'-0½	5'-9	#6	13"	22'-9	#8	13"	7'-9	56	#5	6½"	7'-9	2'-0
	9'	15"	10"	#4	13"	11'-0	#4	13"	22'-6	128	#6	13"	44'-6	7'-8	3'-0	1'-0½	5'-9	#6	13"	22'-9	#8	13"	7'-9	56	#5	6½"	8'-6	2'-4
	10'	15"	10"	#4	12"	12'-0	#4	12"	24'-6	138	#6	12"	44'-6	7'-8	3'-0	1'-0½	5'-9	#6	12"	22'-9	#8	12"	7'-9	56	#5	6"	9'-0	2'-4
12'	8'	18"	12"	#4	12"	10'-6	#4	12"	21'-6	118	#7	12"	53'-9	9'-0	4'-0	1'-3½	6'-5	#6	12"	27'-0	#8	12"	9'-0	64	#5	6"	8'-3	2'-4
	9'	18"	12"	#4	12"	11'-6	#4	12"	23'-6	128	#7	12"	53'-9	9'-0	4'-0	1'-3½	6'-5	#6	12"	27'-0	#8	12"	9'-0	64	#5	6"	9'-0	2'-6
	10'	18"	12"	#4	12"	12'-6	#4	12"	25'-6	138	#7	12"	53'-9	9'-0	4'-0	1'-3½	6'-5	#6	12"	27'-0	#8	12"	9'-0	64	#5	6"	9'-6	2'-6
	11'	18"	12"	#4	12"	13'-6	#4	12"	27'-6	138	#7	12"	53'-9	9'-0	4'-0	1'-3½	6'-5	#6	12"	27'-0	#8	12"	9'-0	64	#5	6"	10'-0	2'-6
	12'	18"	12"	#5	12"	14'-6	#4	12"	29'-6	148	#7	12"	53'-9	9'-0	4'-0	1'-3½	6'-5	#6	12"	27'-0	#8	12"	9'-0	64	#5	6"	11'-0	3'-0

TABLE NO. IV
20'-25' FILL

Span "S"	Height "H"	Top Slab "T"	Walls "W"	aa			bb			cc	dd							ee			ff			gg	hh			
				Size	Spacing	Length	Size	Spacing	Length	Number⊕	Size	Spacing	Length	A	B	C	D	Size	Spacing	Length	Size	Spacing	Length	Number⊕	Size	Spacing	Length	F
6'	3'	10½"	8"	#4	11"	4'-3	#4	11"	9'-0	88	#5	11"	28'-3	4'-8	2'-6	8"	2'-10	#4	11"	14'-0	#5	11"	5'-3	32	#4	5½"	4'-3	1'-6
	4'	10½"	8"	#4	11"	5'-3	#4	11"	11'-0	98	#5	11"	28'-3	4'-8	2'-6	8"	2'-10	#4	11"	14'-0	#5	11"	5'-3	32	#4	5½"	4'-9	1'-6
	5'	10½"	8"	#4	11"	6'-3	#4	11"	13'-0	98	#5	11"	28'-3	4'-8	2'-6	8"	2'-10	#4	11"	14'-0	#5	11"	5'-3	32	#4	5½"	5'-3	1'-6
	6'	10½"	8"	#4	11"	7'-3	#4	11"	15'-0	108	#5	11"	28'-3	4'-8	2'-6	8"	2'-10	#4	11"	14'-0	#5	11"	4'-9	32	#4	5½"	6'-0	1'-9
	7'	10½"	8"	#4	11"	8'-3	#4	11"	17'-0	118	#5	11"	28'-3	4'-8	2'-6	8"	2'-10	#4	11"	14'-0	#5	11"	4'-9	32	#4	5½"	6'-6	1'-9
8'	3'	13½"	9"	#4	11"	4'-9	#4	11"	10'-0	88	#5	11"	36'-6	5'-11	3'-0	11"	3'-11	#5	11"	18'-6	#7	11"	6'-6	40	#4	5½"	4'-6	1'-6
	4'	13½"	9"	#4	11"	5'-9	#4	11"	12'-0	98	#5	11"	36'-6	5'-11	3'-0	11"	3'-11	#5	11"	18'-6	#7	11"	6'-6	40	#4	5½"	5'-0	1'-6
	5'	13½"	9"	#4	11"	6'-9	#4	11"	14'-0	98	#5	11"	36'-6	5'-11	3'-0	11"	3'-11	#5	11"	18'-6	#7	11"	6'-6	40	#4	5½"	5'-6	1'-6
	6'	13½"	9"	#4	11"	7'-9	#4	11"	16'-0	108	#5	11"	36'-6	5'-11	3'-0	11"	3'-11	#5	11"	18'-6	#7	11"	6'-6	40	#4	5½"	6'-3	1'-9
	7'	13½"	9"	#4	11"	8'-9	#4	11"	18'-0	118	#5	11"	36'-6	5'-11	3'-0	11"	3'-11	#5	11"	18'-6	#7	11"	6'-6	40	#4	5½"	6'-9	1'-9
	8'	13½"	9"	#4	12"	9'-9	#4	12"	20'-0	118	#5	12"	36'-6	5'-11	3'-0	11"	3'-11	#5	12"	18'-6	#7	12"	6'-6	40	#5	6"	7'-3	1'-9
10'	3'	16½"	10"	#4	12"	5'-3	#4	12"	11'-0	88	#6	12"	45'-3	7'-8	3'-0	1'-2	5'-6	#6	12"	22'-9	#8	12"	7'-9	56	#5	6"	5'-0	1'-9
	4'	17"	10"	#4	12"	6'-3	#4	12"	13'-0	98	#6	12"	45'-6	7'-8	3'-0	1'-2½	5'-5	#6	12"	22'-9	#8	12"	7'-9	56	#4	6"	5'-6	1'-9
	5'	17"	10"	#4	12"	7'-3	#4	12"	15'-0	98	#6	12"	45'-6	7'-8	3'-0	1'-2½	5'-5	#6	12"	22'-9	#8	12"	7'-9	56	#4	6"	6'-0	1'-9
	6'	17"	10"	#4	12"	8'-3	#4	12"	17'-0	108	#6	12"	45'-6	7'-8	3'-0	1'-2½	5'-5	#6	12"	22'-9	#8	12"	7'-9	56	#4	6"	6'-6	1'-9
	7'	17"	10"	#4	12"	9'-3	#4	12"	19'-0	118	#6	12"	45'-6	7'-8	3'-0	1'-2½	5'-5	#6	12"	22'-9	#8	12"	7'-9	56	#4	6"	7'-3	2'-0
	8'	17"	10"	#4	12"	10'-3	#4	12"	21'-0	118	#6	12"	45'-6	7'-8	3'-0	1'-2½	5'-5	#6	12"	22'-9	#8	12"	7'-9	56	#5	6"	8'-0	2'-0
	9'	17"	10"	#4	12"	11'-3	#4	12"	23'-0	128	#6	12"	45'-6	7'-8	3'-0	1'-2½	5'-5	#6	12"	22'-9	#8	12"	7'-9	56	#5	6"	8'-6	2'-0
	10'	17"	10"	#5	12"	12'-3	#4	12"	25'-0	138	#6	12"	45'-6	7'-8	3'-0	1'-2½	5'-5	#6	12"	22'-9	#8	12"	7'-9	56	#5	6"	9'-0	2'-3
12'	8'	20½"	12"	#4	15"	11'-0	#4	15"	22'-6	118	#6	10"	54'-3	8'-9	4'-0	1'-6	6'-0	#6	10"	27'-0	#8	10"	9'-0	56	#4	5"	8'-3	2'-2
	9'	20½"	12"	#4	15"	12'-0	#4	15"	24'-6	128	#6	10"	54'-3	8'-9	4'-0	1'-6	6'-0	#6	10"	27'-0	#8	10"	9'-0	56	#5	5"	9'-0	2'-4
	10'	20½"	12"	#4	10"	13'-0	#4	15"	26'-6	138	#6	10"	54'-3	8'-9	4'-0	1'-6	6'-0	#6	10"	27'-0	#8	10"	9'-0	56	#5	5"	9'-9	2'-6
	11'	20½"	12"	#4	10"	14'-0	#4	15"	28'-6	138	#6	10"	53'-9	8'-6	4'-0	1'-6	6'-0	#6	10"	27'-0	#8	10"	9'-0	56	#5	5"	10'-3	2'-6
	12'	20½"	12"	#4	10"	15'-0	#4	15"	30'-6	148	#6	10"	53'-9	8'-6	4'-0	1'-6	6'-0	#6	10"	27'-0	#8	10"	9'-0	56	#5	5"	11'-0	2'-9

TABLE NO. V
25'-30' FILL

Span "S"	Height "H"	Top Slab "T"	Walls "W"	aa			bb			cc	dd							ee			ff			gg	hh			
				Size	Spacing	Length	Size	Spacing	Length	Number⊕	Size	Spacing	Length	A	B	C	D	Size	Spacing	Length	Size	Spacing	Length	Number⊕	Size	Spacing	Length	F
6'	3'	11½"	8"	#4	15"	4'-6	#4	15"	9'-6	88	#5	10"	28'-9	5'-0	2'-0	9"	3'-2	#4	10"	14'-0	#5	10"	5'-3	32	#4	5"	4'-3	1'-6
	4'	11½"	8"	#4	15"	5'-6	#4	15"	11'-6	98	#5	10"	28'-9	5'-0	2'-0	9"	3'-2	#4	10"	14'-0	#5	10"	5'-3	32	#4	5"	4'-9	1'-6
	5'	11½"	8"	#4	15"	6'-6	#4	15"	13'-6	98	#5	10"	28'-9	5'-0	2'-0	9"	3'-2	#4	10"	14'-0	#5	10"	5'-3	32	#4	5"	5'-3	1'-6
	6'	11½"	8"	#4	15"	7'-6	#4	15"	15'-6	108	#5	10"	28'-9	5'-0	2'-0	9"	3'-2	#4	10"	14'-0	#5	10"	4'-9	32	#4	5"	6'-0	1'-9
	7'	11½"	8"	#4	10"	8'-6	#4	15"	17'-6	118	#5	10"	28'-9	5'-0	2'-0	9"	3'-2	#4	10"	14'-0	#5	10"	4'-9	32	#4	5"	6'-6	1'-9
8'	3'	15½"	9"	#4	11"	5'-0	#4	11"	10'-9	88	#5	11"	37'-0	5'-10	3'-0	1'-1	3'-7	#5	11"	18'-6	#7	11"	7'-0	40	#4	5½"	4'-9	1'-8
	4'	15½"	9"	#4	11"	6'-0	#4	11"	12'-9	98	#5	11"	37'-0	5'-10	3'-0	1'-1	3'-7	#5	11"	18'-6	#7	11"	7'-0	40	#4	5½"	5'-3	1'-8
	5'	15½"	9"	#4	11"	7'-0	#4	11"	14'-9	98	#5	11"	37'-0	5'-10	3'-0	1'-1	3'-7	#5	11"	18'-6	#7	11"	6'-6	40	#4	5½"	5'-9	1'-8
	6'	15½"	9"	#4	11"	8'-0	#4	11"	16'-9	108	#5	11"	37'-0	5'-10	3'-0	1'-1	3'-7	#5	11"	18'-6	#7	11"	6'-6	40	#4	5½"	6'-3	1'-8
	7'	15½"	9"	#4	11"	9'-0	#4	11"	18'-9	118	#5	11"	37'-0	5'-10	3'-0	1'-1	3'-7	#5	11"	18'-6	#7	11"	6'-6	40	#4	5½"	7'-0	1'-10
	8'	15½"	9"	#4	11"	10'-0	#4	11"	20'-9	118	#5	11"	37'-0	5'-10	3'-0	1'-1	3'-7	#5	11"	18'-6	#7	11"	6'-6	40	#5	5½"	7'-9	2'-0
10'	3'	19"	10"	#4	11"	5'-9	#4	11"	11'-9	88	#6	11"	45'-9	7'-6	3'-0	1'-4½	5'-1	#6	11"	22'-9	#8	11"	7'-9	48	#4	5½"	5'-0	1'-7
	4'	19"	10"	#4	11"	6'-9	#4	11"	13'-9	98	#6	11"	45'-9	7'-6	3'-0	1'-4½	5'-1	#6	11"	22'-9	#8	11"	7'-9	48	#4	5½"	5'-6	1'-7
	5'	19"	10"	#4	11"	7'-9	#4	11"	15'-9	98	#6	11"	45'-9	7'-6	3'-0	1'-4½	5'-1	#6	11"	22'-9	#8	11"	7'-9	48	#4	5½"	6'-0	1'-7
	6'	19"	10"	#4	11"	8'-9	#4	11"	17'-9	108	#6	11"	45'-9	7'-6	3'-0	1'-4½	5'-1	#6	11"	22'-9	#8	11"	7'-9	48	#4	5½"	6'-6	1'-7
	7'	19"	10"	#4	11"	9'-9	#4	11"	19'-9	118	#6	11"	45'-9	7'-6	3'-0	1'-4½	5'-1	#6	11"	22'-9	#8	11"	7'-9	48	#4	5½"	7'-0	1'-7
	8'	19"	10"	#4	13"	10'-9	#4	13"	21'-9	118	#7	13"	46'-3	7'-9	3'-0	1'-4½	5'-1	#6	13"	22'-9	#8	13"	7'-9	48	#5	6½"	8'-0	2'-0
	9'	19"	10"	#5	13"	11'-9	#4	13"	23'-9	128	#7	13"	46'-3	7'-9	3'-0	1'-4½	5'-1	#6	13"	22'-9	#8	13"	7'-9	48	#5	6½"	8'-6	2'-0
	10'	19"	10"	#5	11"	12'-9	#4	11"	25'-9	138	#6	11"	45'-9	7'-6	3'-0	1'-4½	5'-1	#6	11"	22'-9	#8	11"	7'-9	48	#5	5½"	9'-3	2'-3
12'	8'	23"	12"	#4	10"	11'-3	#4	15"	23'-0	118	#6	10"	54'-9	8'-7	4'-0	1'-8½	5'-7	#6	10"	27'-0	#8	10"	9'-0	56	#4	5"	8'-3	2'-0
	9'	23"	12"	#4	10"	12'-3	#4	15"	25'-0	128	#6	10"	54'-9	8'-7	4'-0	1'-8½	5'-7	#6	10"	27'-0	#8	10"	9'-0	56	#5	5"	9'-3	2'-4
	10'	23"	12"	#4	10"	13'-3	#4	15"	27'-0	138	#6	10"	54'-9	8'-7	4'-0	1'-8½	5'-7	#6	10"	27'-0	#8	10"	9'-0	56	#5	5"	9'-9	2'-4
	11'	23"	12"	#5	10"	14'-3	#4	15"	29'-0	138	#6	10"	54'-9	8'-7	4'-0	1'-8½	5'-7	#6	10"	27'-0	#8	10"	9'-0	56	#5	5"	10'-6	2'-8
	12'	23"	12"	#6	10"	15'-3	#4	15"	31'-0	148	#6	10"	54'-3	8'-3	4'-0	1'-8½	5'-7	#6	10"	27'-0	#8	10"	9'-0	56	#5	5"	11'-0	2'-8

⊕ Total number of bars in the cross-section.

NOTE:

See Std. CB-4 for Table No. I, typical section, steel call outs, bend diagrams and quantities.

See Std. CM-1 for general notes and miscellaneous details.

DESIGN APPROVED	STATE OF ARIZONA DEPARTMENT OF TRANSPORTATION DIVISION OF HIGHWAYS STANDARD DRAWINGS	REVISION 7-76
R.C. Buchler		
APPROVED FOR DISTRIBUTION	FOUR BARREL BOX CULVERT	STANDARD NO. CB-4A
		DRAWING NO. B-2.07

DESIGN	DHY	12-71	NO.	DESCRIPTION OF REVISIONS	MADE BY	DATE
DRAWN	CAG	8-72	①	Table II, 6' span, T now 8"	JTW	7-76
CHECKED	NAB	3-73	②			
			③			

QUANTITIES PER LIN. FOOT OF BARRELS

Span "S"	Height "H"	Table I Concrete C.Y.	Table I Reinf. Steel Lbs.	Table II Concrete C.Y.	Table II Reinf. Steel Lbs.	Table III Concrete C.Y.	Table III Reinf. Steel Lbs.	Table IV Concrete C.Y.	Table IV Reinf. Steel Lbs.	Table V Concrete C.Y.	Table V Reinf. Steel Lbs.
6'	3'	2.293	383.2	2.293	314.0	2.505	330.4	2.823	339.1	3.035	352.5
	4'	2.441	387.9	2.441	332.5	2.653	348.6	2.971	357.3	3.184	370.4
	5'	2.590	398.1	2.590	341.8	2.801	358.8	3.119	367.5	3.331	377.6
	6'	2.738	416.3	2.738	380.8	2.950	377.1	3.267	382.6	3.479	390.8
	7'	2.886	464.0	2.886	399.0	3.098	395.3	3.416	400.8	3.628	411.9
8'	3'	3.038	526.9	3.453	491.3	3.868	476.8	4.422	494.9	4.975	508.9
	4'	3.205	600.3	3.620	493.9	4.035	494.2	4.588	513.0	5.142	527.2
	5'	3.510	582.5	3.787	503.2	4.202	522.0	4.755	523.3	5.309	528.4
	6'	3.676	604.4	3.953	520.6	4.368	540.0	4.922	543.0	5.475	546.7
	7'	3.843	626.3	4.120	538.0	4.535	558.0	5.088	561.2	5.642	566.3
	8'	4.010	641.4	4.287	571.2	4.702	570.0	5.255	556.3	5.807	602.2
10'	3'	4.189	753.3	4.872	646.8	5.726	656.9	6.409	705.8	7.263	740.7
	4'	4.545	785.6	5.058	666.6	5.912	674.9	6.765	709.6	7.449	758.9
	5'	4.730	778.3	5.414	680.1	6.267	687.7	6.951	719.0	7.634	769.1
	6'	4.916	827.7	5.599	677.8	6.453	705.7	7.136	736.4	7.819	787.3
	7'	5.101	856.2	5.784	696.1	6.638	723.7	7.321	755.1	8.004	805.5
	8'	5.286	835.7	5.969	747.2	6.823	733.8	7.506	789.8	8.189	798.6
	9'	5.471	859.9	6.154	765.3	7.008	752.3	7.691	808.6	8.374	824.8
	10'	5.656	870.0	6.340	785.2	7.193	821.3	7.875	833.7	8.560	897.2
12'	8'	7.148	1155.5	8.172	956.1	9.400	967.6	10.425	980.3	11.448	991.2
	9'	7.370	1189.4	8.394	977.6	9.622	988.5	10.646	1030.8	11.670	1044.8
	10'	7.593	1207.4	8.616	998.1	9.845	1007.4	10.868	1058.6	11.892	1063.7
	11'	7.815	1229.6	8.838	1009.9	10.067	1018.2	11.091	1067.7	12.114	1089.9
	12'	8.037	1257.8	9.061	1032.1	10.289	1081.7	11.313	1102.6	12.336	1124.7

TABLE NO. I
0'-10' FILL

Span "S"	Height "H"	Top Slab "T"	Walls "W"	aa Size	aa Spacing	aa Length	bb Size	bb Spacing	bb Length	cc Number ⌖	dd Size	dd Spacing	dd Length	dd A	dd B	dd C	dd D	dd E	ee & ee1 Size	ee & ee1 Spacing	ee Length	ee1 Length	ff Size	ff Spacing	ff Length	gg Number ⌖	hh Size	hh Spacing	hh Length	hh F
6'	3'	8"	8"	#4	11"	3'-9	#5	11"	8'-3	108	#4	11"	18'-0	5'-0	2'-3	5½"	3'-6	2'-4	#5	11"	20'-9	14'-3	#5	11"	27'-9	50	#4	5½"	6'-9	4'-2
	4'	8"	8"	#4	11"	4'-9	#4	11"	10'-3	120	#4	11"	18'-0	5'-0	2'-3	5½"	3'-6	2'-4	#5	11"	20'-9	14'-3	#5	11"	27'-9	50	#4	5½"	7'-3	4'-2
	5'	8"	8"	#4	11"	5'-9	#4	11"	12'-3	120	#4	11"	18'-0	5'-0	2'-3	5½"	3'-6	2'-4	#5	11"	20'-9	14'-3	#5	11"	27'-9	50	#4	5½"	7'-9	4'-2
	6'	8"	8"	#4	11"	6'-9	#4	11"	14'-3	132	#4	11"	18'-0	5'-0	2'-3	5½"	3'-6	2'-4	#5	11"	20'-9	14'-3	#5	11"	27'-9	50	#4	5½"	8'-3	4'-2
	7'	8"	8"	#4	11"	7'-9	#4	11"	16'-3	144	#5	11"	18'-0	5'-0	2'-3	5½"	3'-6	2'-4	#5	11"	20'-9	14'-3	#5	11"	27'-9	50	#4	5½"	8'-9	4'-2
8'	3'	8½"	9"	#4	12"	4'-0	#4	6"	8'-6	108	#5	12"	22'-6	5'-8	3'-4	6"	4'-5	2'-11	#5	12"	27'-0	18'-3	#6	12"	36'-3	60	#5	6"	8'-0	5'-3
	4'	8½"	9"	#4	12"	5'-0	#4	6"	10'-6	120	#5	12"	22'-9	5'-10	3'-4	6"	4'-5	3'-0	#6	12"	27'-0	18'-3	#6	12"	36'-3	70	#5	6"	8'-6	5'-3
	5'	9"	9"	#4	14"	6'-0	#4	7"	12'-6	120	#6	14"	22'-9	6'-0	3'-0	6½"	4'-8	3'-0	#6	14"	27'-0	18'-3	#6	14"	36'-3	70	#5	7"	9'-0	5'-3
	6'	9"	9"	#4	14"	7'-0	#4	7"	14'-6	132	#6	14"	22'-9	6'-0	3'-0	6½"	4'-8	3'-0	#6	14"	27'-0	18'-3	#6	14"	36'-3	70	#5	7"	9'-6	5'-3
	7'	9"	9"	#4	14"	8'-0	#4	7"	16'-6	144	#6	14"	22'-9	5'-10	3'-4	6½"	4'-4	2'-10	#6	14"	27'-0	18'-3	#6	14"	36'-3	70	#5	7"	10'-0	5'-3
	8'	9"	9"	#4	14"	9'-0	#4	7"	18'-6	144	#6	14"	23'-0	6'-1	3'-4	6½"	4'-4	2'-10	#6	14"	27'-0	18'-3	#6	14"	36'-3	70	#5	7"	10'-6	5'-3
10'	3'	10"	10"	#4	11"	4'-3	#5	5½"	9'-0	108	#6	11"	27'-9	6'-11	4'-2	7½"	5'-5	3'-6	#5	11"	33'-3	22'-6	#6	11"	44'-9	80	#5	5½"	9'-3	6'-6
	4'	10½"	10"	#4	11"	5'-3	#5	5½"	11'-0	120	#6	11"	27'-9	6'-10	4'-2	8"	5'-4	3'-5	#5	11"	33'-3	22'-6	#6	11"	44'-9	80	#5	5½"	9'-9	6'-6
	5'	10½"	10"	#4	11"	6'-3	#6	11"	13'-0	120	#6	11"	28'-0	7'-1	4'-2	8"	5'-4	3'-5	#5	11"	33'-3	22'-6	#6	11"	44'-9	80	#5	5½"	10'-3	6'-6
	6'	10½"	10"	#4	13"	7'-3	#5	6½"	15'-0	132	#6	13"	28'-0	7'-2	4'-0	8"	5'-6	3'-6	#6	13"	33'-3	22'-6	#7	13"	44'-9	80	#5	6½"	10'-9	6'-6
	7'	10½"	10"	#4	13"	8'-3	#5	6½"	17'-0	144	#6	13"	28'-0	7'-2	4'-0	8"	5'-6	3'-6	#6	13"	33'-3	22'-6	#7	13"	44'-9	80	#5	6½"	11'-3	6'-6
	8'	10½"	10"	#4	13"	9'-3	#6	13"	19'-0	144	#6	13"	28'-0	7'-2	4'-0	8"	5'-6	3'-6	#6	13"	33'-3	22'-6	#7	13"	44'-9	80	#5	6½"	11'-9	6'-6
	9'	10½"	10"	#4	13"	10'-3	#6	13"	21'-0	156	#6	13"	28'-0	7'-2	4'-0	8"	5'-6	3'-6	#6	13"	33'-3	22'-6	#7	13"	44'-9	80	#5	6½"	12'-3	6'-6
	10'	10½"	10"	#4	13"	11'-3	#4	6½"	23'-0	168	#6	13"	28'-0	7'-2	4'-0	8"	5'-6	3'-6	#6	13"	33'-3	22'-6	#7	13"	44'-9	80	#5	6½"	12'-9	6'-6
12'	8'	12½"	12"	#4	11"	9'-6	#5	5½"	20'-0	144	#6	11"	33'-3	8'-2	5'-0	10"	6'-4	4'-0	#6	11"	40'-0	27'-0	#7	11"	53'-6	100	#5	5½"	13'-3	7'-8
	9'	12½"	12"	#4	11"	10'-6	#5	5½"	22'-0	156	#6	11"	33'-6	8'-5	5'-0	10"	6'-4	4'-0	#6	11"	40'-0	27'-0	#7	11"	53'-6	100	#5	5½"	13'-9	7'-8
	10'	12½"	12"	#4	12"	11'-6	#5	6"	24'-0	168	#7	12"	33'-6	8'-7	5'-0	10"	6'-4	3'-10	#6	12"	40'-0	27'-0	#7	12"	53'-6	100	#5	6"	14'-3	7'-8
	11'	12½"	12"	#4	12"	12'-6	#5	6"	26'-0	168	#7	12"	33'-6	8'-7	5'-0	10"	6'-4	3'-10	#6	12"	40'-0	27'-0	#7	12"	53'-6	100	#5	6"	14'-9	7'-8
	12'	12½"	12"	#4	12"	13'-6	#5	6"	28'-0	180	#7	12"	33'-3	8'-4	5'-0	10"	6'-4	3'-10	#6	12"	40'-0	27'-0	#7	12"	53'-6	100	#5	6"	15'-3	7'-8

⌖ Total number of bars in the cross-section.

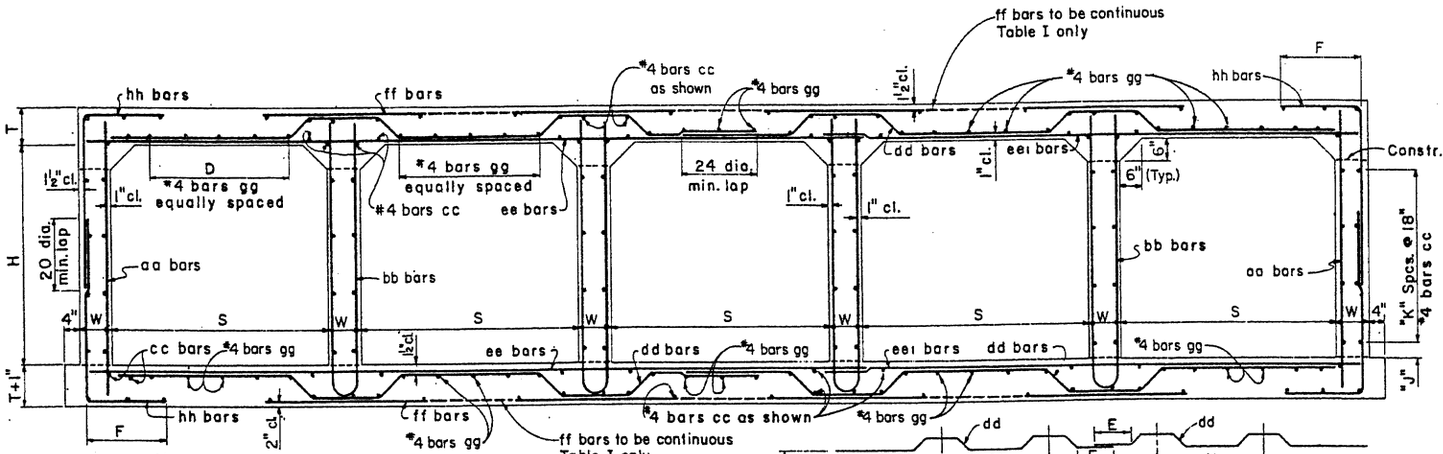

TYPICAL SECTION

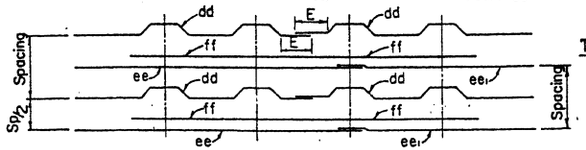

REINFORCING BAR PLACING DIAGRAM
For Table I only

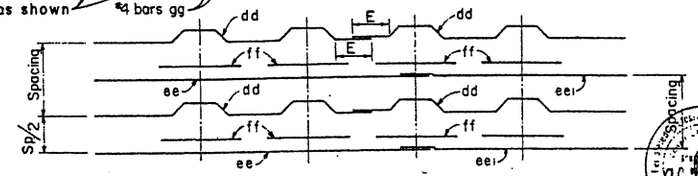

REINFORCING BAR PLACING DIAGRAM
For Tables II through V

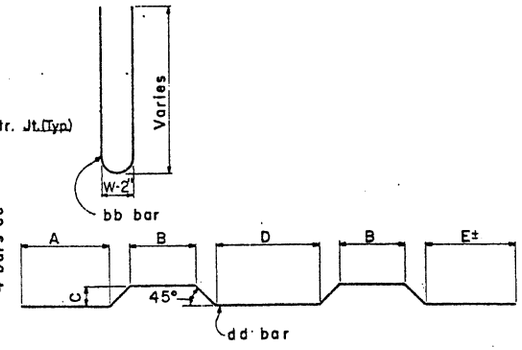

BENDS

Height "H"	"J" Dim.	"K" Spaces
3'	9"	1
4'	3"	2
5'	12"	2
6'	9"	3
7'	3"	4
8'	12"	4
9'	9"	5
10'	3"	6
11'	12"	6
12'	9"	7

NOTE:
See Std. CB-5A for Tables II thru V.
See Std. CM-1 for general notes and miscellaneous details.
All bend dimensions are out to out of bar.

NO.	DESCRIPTION OF REVISIONS	MADE BY	DATE
1	Table I ff bars & quantities	JTW	7-76
12-71			
2	8-72		
3	3-73		

DESIGN	DHY	
DRAWN	FDL	
CHECKED	RAB	

DESIGN APPROVED R.C. Buchler

APPROVED FOR DISTRIBUTION

STATE OF ARIZONA
DEPARTMENT OF TRANSPORTATION
DIVISION OF HIGHWAYS
STANDARD DRAWINGS

FIVE BARREL
BOX CULVERT

REVISION 7-76

STANDARD NO. CB-5

DRAWING NO. B-2.08

TABLE NO. II
10'-15' FILL

Span "S"	Height "H"	Top Slab "T"	Walls "W"	aa Size	aa Spacing	aa Length	bb Size	bb Spacing	bb Length	cc ⊕ Number	dd Size	dd Spacing	dd Length	dd A	dd B	dd C	dd D	dd E	ee & eel Size	ee & eel Spacing	ee Length	eel Length	ff Size	ff Spacing	ff Length	gg ⊕ Number	hh Size	hh Spacing	hh Length	F
6'	3'	8"	8"	#4	12"	3'-9	#4	12"	8'-0	108	#5	12"	17'-6	4'-5	2'-6	5"	3'-4	2'-4	#4	12"	20'-9	14'-3	#5	12"	4'-9	50	#4	6"	4'-3	1'-9
	4'	8"	8"	#4	12"	4'-9	#4	12"	10'-0	120	#5	12"	17'-9	4'-8	2'-6	5"	3'-4	2'-4	#4	12"	20'-9	14'-3	#5	12"	4'-9	50	#4	6"	4'-9	1'-9
	5'	8"	8"	#4	12"	5'-9	#4	12"	12'-0	120	#5	12"	17'-9	4'-8	2'-6	5"	3'-4	2'-4	#4	12"	20'-9	14'-3	#5	12"	4'-9	50	#4	6"	5'-3	1'-9
	6'	8"	8"	#4	11"	6'-9	#4	11"	14'-0	132	#5	11"	17'-9	4'-8	2'-6	5"	3'-4	2'-4	#4	11"	20'-9	14'-3	#5	11"	4'-9	50	#4	5½"	5'-9	1'-9
	7'	8"	8"	#4	11"	7'-9	#4	11"	16'-0	144	#5	11"	17'-9	4'-8	2'-6	5"	3'-4	2'-4	#4	11"	20'-9	14'-3	#5	11"	4'-9	50	#4	5½"	6'-3	1'-9
8'	3'	10"	9"	#4	12"	4'-3	#4	12"	9'-0	108	#6	12"	23'-0	5'-11	3'-0	7½"	4'-6	3'-0	#5	12"	27'-0	18'-3	#6	12"	6'-3	60	#5	6"	5'-0	2'-3
	4'	10"	9"	#4	12"	5'-3	#4	12"	11'-0	120	#6	12"	23'-3	6'-2	3'-0	7½"	4'-6	3'-0	#5	12"	27'-0	18'-3	#6	12"	6'-3	60	#4	6"	5'-3	2'-0
	5'	10"	9"	#4	12"	6'-3	#4	12"	13'-0	120	#6	12"	23'-3	6'-2	3'-0	7½"	4'-6	3'-0	#5	12"	27'-0	18'-3	#6	12"	6'-3	60	#4	6"	5'-9	2'-0
	6'	10"	9"	#4	12"	7'-3	#4	12"	15'-0	132	#6	12"	23'-3	6'-2	3'-0	7½"	4'-6	3'-0	#5	12"	27'-0	18'-3	#6	12"	6'-3	60	#4	6"	6'-3	2'-0
	7'	10"	9"	#4	12"	8'-3	#4	12"	17'-0	144	#6	12"	23'-3	6'-2	3'-0	7½"	4'-6	3'-0	#5	12"	27'-0	18'-3	#6	12"	6'-3	60	#4	6"	6'-9	2'-0
	8'	10"	9"	#4	12"	9'-3	#4	12"	19'-0	144	#6	12"	23'-3	6'-2	3'-0	7½"	4'-6	3'-0	#5	12"	27'-0	18'-3	#6	12"	6'-3	60	#5	6"	7'-6	2'-3
10'	3'	12"	10"	#4	11"	4'-6	#4	11"	9'-6	108	#6	11"	28'-3	7'-3	3'-6	9½"	5'-9	3'-9	#5	11"	33'-3	22'-6	#7	11"	7'-6	70	#5	5½"	5'-3	2'-3
	4'	12"	10"	#4	11"	5'-6	#4	11"	11'-6	120	#6	11"	28'-3	7'-3	3'-6	9½"	5'-9	3'-9	#5	11"	33'-3	22'-6	#7	11"	7'-6	70	#5	5½"	5'-9	2'-3
	5'	12½"	10"	#4	11"	6'-6	#4	11"	13'-6	120	#6	11"	28'-6	7'-5	3'-6	10"	5'-8	3'-8	#5	11"	33'-3	22'-6	#7	11"	7'-6	70	#5	5½"	6'-3	2'-3
	6'	12½"	10"	#4	11"	7'-6	#4	11"	15'-6	132	#6	11"	28'-6	7'-5	3'-6	10"	5'-8	3'-8	#5	11"	33'-3	22'-6	#7	11"	7'-6	70	#4	5½"	6'-9	2'-3
	7'	12½"	10"	#4	11"	8'-6	#4	11"	17'-6	144	#6	11"	28'-6	7'-5	3'-6	10"	5'-8	3'-8	#5	11"	33'-3	22'-6	#7	11"	7'-6	70	#4	5½"	7'-3	2'-3
	8'	12½"	10"	#4	13"	9'-6	#4	13"	19'-6	144	#7	13"	28'-9	7'-8	3'-6	10"	5'-8	3'-8	#6	13"	33'-3	22'-6	#7	13"	7'-6	70	#5	6½"	7'-9	2'-3
	9'	12½"	10"	#4	13"	10'-6	#4	13"	21'-6	156	#7	13"	28'-9	7'-8	3'-6	10"	5'-8	3'-8	#6	13"	33'-3	22'-6	#7	13"	7'-6	70	#5	6½"	8'-3	2'-3
	10'	12½"	10"	#4	13"	11'-6	#4	13"	23'-6	168	#7	13"	28'-9	7'-8	3'-6	10"	5'-8	3'-8	#6	13"	33'-3	22'-6	#7	13"	7'-6	70	#5	6½"	9'-0	2'-6
12'	8'	15"	12"	#4	11"	10'-0	#4	11"	20'-6	144	#6	11"	34'-9	8'-6	4'-6	12½"	6'-5	4'-11	#6	11"	40'-0	27'-0	#8	11"	9'-0	80	#5	5½"	8'-3	2'-6
	9'	15"	12"	#4	11"	11'-0	#4	11"	22'-6	156	#6	11"	35'-9	8'-9	4'-6	12½"	6'-5	4'-11	#6	11"	40'-0	27'-0	#8	11"	9'-0	80	#5	5½"	8'-9	2'-6
	10'	15"	12"	#4	11"	12'-0	#4	11"	24'-6	168	#6	11"	34'-9	8'-6	4'-6	12½"	6'-5	4'-11	#6	11"	40'-0	27'-0	#8	11"	9'-0	80	#5	5½"	9'-6	2'-9
	11'	15"	12"	#4	11"	13'-0	#4	11"	26'-6	168	#6	11"	34'-9	8'-6	4'-6	12½"	6'-5	4'-11	#6	11"	40'-0	27'-0	#8	11"	9'-0	80	#5	5½"	10'-0	2'-9
	12'	15"	12"	#4	11"	14'-0	#4	11"	28'-6	180	#6	11"	34'-9	8'-6	4'-6	12½"	6'-5	4'-11	#6	11"	40'-0	27'-0	#8	11"	9'-0	80	#5	5½"	10'-9	3'-0

TABLE NO. III
15'-20' FILL

Span "S"	Height "H"	Top Slab "T"	Walls "W"	aa Size	aa Spacing	aa Length	bb Size	bb Spacing	bb Length	cc ⊕ Number	dd Size	dd Spacing	dd Length	dd A	dd B	dd C	dd D	dd E	ee & eel Size	ee & eel Spacing	ee Length	eel Length	ff Size	ff Spacing	ff Length	gg ⊕ Number	hh Size	hh Spacing	hh Length	F
6'	3'	9"	8"	#4	11"	4'-0	#4	11"	8'-6	108	#5	11"	18'-0	4'-6	2'-6	6½"	3'-1	2'-4	#4	11"	20'-9	14'-3	#5	11"	4'-9	40	#4	5½"	4'-3	1'-8
	4'	9"	8"	#4	11"	5'-0	#4	11"	10'-6	120	#5	11"	18'-0	4'-6	2'-6	6½"	3'-1	2'-4	#4	11"	20'-9	14'-3	#5	11"	4'-9	40	#4	5½"	4'-9	1'-8
	5'	9"	8"	#4	11"	6'-0	#4	11"	12'-6	120	#5	11"	18'-0	4'-6	2'-6	6½"	3'-1	2'-4	#4	11"	20'-9	14'-3	#5	11"	4'-9	40	#4	5½"	5'-3	1'-8
	6'	9"	8"	#4	11"	7'-0	#4	11"	14'-6	132	#5	11"	18'-0	4'-6	2'-6	6½"	3'-1	2'-4	#4	11"	20'-9	14'-3	#5	11"	4'-9	40	#4	5½"	5'-9	1'-8
	7'	9"	8"	#4	11"	8'-0	#4	11"	16'-6	144	#5	11"	18'-0	4'-6	2'-6	6½"	3'-1	2'-4	#4	11"	20'-9	14'-3	#5	11"	4'-9	40	#4	5½"	6'-3	1'-8
8'	3'	11½"	9"	#4	12"	4'-6	#4	12"	9'-6	108	#6	12"	23'-3	6'-0	3'-0	9"	4'-3	2'-9	#5	12"	27'-0	18'-3	#6	12"	6'-3	60	#4	6"	4'-6	1'-9
	4'	11½"	9"	#4	12"	5'-6	#4	12"	11'-6	120	#6	12"	23'-3	6'-0	3'-0	9"	4'-3	2'-9	#5	12"	27'-0	18'-3	#6	12"	6'-3	60	#4	6"	5'-0	1'-9
	5'	11½"	9"	#4	13"	6'-6	#4	13"	13'-6	120	#6	13"	23'-3	6'-0	3'-0	9"	4'-3	2'-9	#5	13"	27'-0	18'-3	#7	13"	6'-6	60	#5	6½"	6'-0	2'-0
	6'	11½"	9"	#4	13"	7'-6	#4	13"	15'-6	132	#6	13"	23'-3	6'-0	3'-0	9"	4'-3	2'-9	#5	13"	27'-0	18'-3	#7	13"	6'-6	60	#5	6½"	6'-6	2'-0
	7'	11½"	9"	#4	13"	8'-6	#4	13"	17'-6	144	#6	13"	23'-3	6'-0	3'-0	9"	4'-3	2'-9	#5	13"	27'-0	18'-3	#7	13"	6'-6	60	#5	6½"	7'-0	2'-0
	8'	11½"	9"	#4	13"	9'-6	#4	13"	19'-6	144	#6	13"	23'-3	6'-3	2'-6	9"	4'-9	3'-0	#5	13"	27'-0	18'-3	#7	13"	6'-6	60	#5	6½"	7'-9	2'-4
10'	3'	14½"	10"	#4	13"	5'-0	#4	13"	10'-6	108	#6	13"	28'-6	7'-6	3'-0	1'-0	5'-10	3'-6	#6	13"	33'-3	22'-6	#8	13"	7'-9	70	#5	6½"	5'-3	2'-0
	4'	14½"	10"	#4	13"	6'-0	#4	13"	12'-6	120	#6	13"	28'-6	7'-6	3'-0	1'-0	5'-10	3'-6	#6	13"	33'-3	22'-6	#8	13"	7'-9	70	#5	6½"	5'-9	2'-0
	5'	15"	10"	#4	13"	7'-0	#4	13"	14'-6	120	#6	13"	29'-0	7'-9	3'-0	1'-0½	5'-9	3'-6	#6	13"	33'-3	22'-6	#8	13"	7'-9	70	#5	6½"	6'-3	2'-0
	6'	15"	10"	#4	13"	8'-0	#4	13"	16'-6	132	#6	13"	29'-0	7'-9	3'-0	1'-0½	5'-9	3'-6	#6	13"	33'-3	22'-6	#8	13"	7'-9	70	#5	6½"	6'-9	2'-0
	7'	15"	10"	#4	13"	9'-0	#4	13"	18'-6	144	#6	13"	29'-0	7'-9	3'-0	1'-0½	5'-9	3'-6	#6	13"	33'-3	22'-6	#8	13"	7'-9	70	#5	6½"	7'-3	2'-0
	8'	15"	10"	#4	13"	10'-0	#4	13"	20'-6	144	#6	13"	29'-0	7'-9	3'-0	1'-0½	5'-9	3'-6	#6	13"	33'-3	22'-6	#8	13"	7'-9	70	#5	6½"	7'-9	2'-0
	9'	15"	10"	#4	13"	11'-0	#4	13"	22'-6	156	#6	13"	28'-9	7'-6	3'-0	1'-0½	5'-9	3'-6	#6	13"	33'-3	22'-6	#8	13"	7'-9	70	#5	6½"	8'-6	2'-4
	10'	15"	10"	#4	12"	12'-0	#4	12"	24'-6	168	#6	12"	28'-9	7'-6	3'-0	1'-0½	5'-9	3'-6	#6	12"	33'-3	22'-6	#8	12"	7'-9	70	#5	6"	9'-0	2'-4
12'	8'	18"	12"	#4	12"	10'-6	#4	12"	21'-6	144	#7	12"	34'-9	8'-11	4'-0	1'-3½	6'-5	4'-0	#6	12"	40'-0	27'-0	#8	12"	9'-0	80	#5	6"	8'-3	2'-4
	9'	18"	12"	#4	12"	11'-6	#4	12"	23'-6	156	#7	12"	34'-9	8'-11	4'-0	1'-3½	6'-5	4'-0	#6	12"	40'-0	27'-0	#8	12"	9'-0	80	#5	6"	9'-0	2'-6
	10'	18"	12"	#4	12"	12'-6	#4	12"	25'-6	168	#7	12"	34'-9	8'-11	4'-0	1'-3½	6'-5	4'-0	#6	12"	40'-0	27'-0	#8	12"	9'-0	80	#5	6"	9'-6	2'-6
	11'	18"	12"	#4	12"	13'-6	#4	12"	27'-6	168	#7	12"	34'-9	8'-11	4'-0	1'-3½	6'-5	4'-0	#6	12"	40'-0	27'-0	#8	12"	9'-0	80	#5	6"	10'-0	2'-6
	12'	18"	12"	#4	12"	14'-6	#4	12"	29'-6	180	#7	12"	34'-9	8'-11	4'-0	1'-3½	6'-5	4'-0	#6	12"	40'-0	27'-0	#8	12"	9'-0	80	#6	6"	11'-0	3'-0

TABLE NO. IV
20'-25' FILL

Span "S"	Height "H"	Top Slab "T"	Walls "W"	aa Size	aa Spacing	aa Length	bb Size	bb Spacing	bb Length	cc ⊕ Number	dd Size	dd Spacing	dd Length	dd A	dd B	dd C	dd D	dd E	ee & eel Size	ee & eel Spacing	ee Length	eel Length	ff Size	ff Spacing	ff Length	gg ⊕ Number	hh Size	hh Spacing	hh Length	F
6'	3'	10½"	8"	#4	11"	4'-3	#4	11"	9'-0	108	#5	11"	18'-6	4'-8	2'-6	8"	2'-10	2'-2	#4	11"	20'-9	14'-3	#5	11"	5'-3	40	#4	5½"	4'-3	1'-6
	4'	10½"	8"	#4	11"	5'-3	#4	11"	11'-0	120	#5	11"	18'-6	4'-8	2'-6	8"	2'-10	2'-2	#4	11"	20'-9	14'-3	#5	11"	5'-3	40	#4	5½"	4'-9	1'-6
	5'	10½"	8"	#4	11"	6'-3	#4	11"	13'-0	120	#5	11"	18'-6	4'-8	2'-6	8"	2'-10	2'-2	#4	11"	20'-9	14'-3	#5	11"	5'-3	40	#4	5½"	5'-3	1'-6
	6'	10½"	8"	#4	11"	7'-3	#4	11"	15'-0	132	#5	11"	18'-6	4'-8	2'-6	8"	2'-10	2'-2	#4	11"	20'-9	14'-3	#5	11"	4'-9	40	#4	5½"	6'-0	1'-9
	7'	10½"	8"	#4	11"	8'-3	#4	11"	17'-0	144	#5	11"	18'-6	4'-8	2'-6	8"	2'-10	2'-2	#4	11"	20'-9	14'-3	#5	11"	4'-9	40	#4	5½"	6'-6	1'-9
8'	3'	13½"	9"	#4	11"	4'-9	#4	11"	10'-0	108	#5	11"	23'-9	6'-0	3'-0	11"	3'-11	2'-7	#5	11"	27'-0	18'-3	#7	11"	6'-6	50	#4	5½"	4'-6	1'-6
	4'	13½"	9"	#4	11"	5'-9	#4	11"	12'-0	120	#5	11"	23'-9	6'-0	3'-0	11"	3'-11	2'-7	#5	11"	27'-0	18'-3	#7	11"	6'-6	50	#4	5½"	5'-0	1'-6
	5'	13½"	9"	#4	11"	6'-9	#4	11"	14'-0	120	#5	11"	23'-9	6'-0	3'-0	11"	3'-11	2'-7	#5	11"	27'-0	18'-3	#7	11"	6'-6	50	#4	5½"	5'-6	1'-6
	6'	13½"	9"	#4	11"	7'-9	#4	11"	16'-0	132	#5	11"	23'-9	6'-0	3'-0	11"	3'-11	2'-7	#5	11"	27'-0	18'-3	#7	11"	6'-6	50	#4	5½"	6'-3	1'-9
	7'	13½"	9"	#4	11"	8'-9	#4	11"	18'-0	144	#5	11"	23'-9	6'-0	3'-0	11"	3'-11	2'-7	#5	11"	27'-0	18'-3	#7	11"	6'-6	50	#4	5½"	6'-9	1'-9
	8'	13½"	9"	#4	12"	9'-9	#4	12"	20'-0	144	#5	12"	23'-9	6'-0	3'-0	11"	3'-11	2'-7	#5	12"	27'-0	18'-3	#7	12"	6'-6	50	#5	6"	7'-3	1'-9
10'	3'	16½"	10"	#4	12"	5'-3	#4	12"	11'-0	108	#6	12"	29'-3	7'-8	3'-0	1'-2	5'-6	3'-5	#6	12"	33'-3	22'-6	#8	12"	7'-9	70	#5	6"	5'-0	1'-9
	4'	17"	10"	#4	12"	6'-3	#4	12"	13'-0	120	#6	12"	29'-6	7'-8	3'-0	1'-2½	5'-5	3'-6	#6	12"	33'-3	22'-6	#8	12"	7'-9	70	#4	6"	5'-6	1'-9
	5'	17"	10"	#4	12"	7'-3	#4	12"	15'-0	120	#6	12"	29'-6	7'-8	3'-0	1'-2½	5'-5	3'-6	#6	12"	33'-3	22'-6	#8	12"	7'-9	70	#4	6"	6'-0	1'-9
	6'	17"	10"	#4	12"	8'-3	#4	12"	17'-0	132	#6	12"	29'-6	7'-8	3'-0	1'-2½	5'-5	3'-6	#6	12"	33'-3	22'-6	#8	12"	7'-9	70	#4	6"	6'-6	1'-9
	7'	17"	10"	#4	12"	9'-3	#4	12"	19'-0	144	#6	12"	29'-6	7'-8	3'-0	1'-2½	5'-5	3'-6	#6	12"	33'-3	22'-6	#8	12"	7'-9	70	#4	6"	7'-3	2'-0
	8'	17"	10"	#4	12"	10'-3	#4	12"	21'-0	144	#6	12"	29'-6	7'-8	3'-0	1'-2½	5'-5	3'-6	#6	12"	33'-3	22'-6	#8	12"	7'-9	70	#5	6"	8'-0	2'-0
	9'	17"	10"	#4	12"	11'-3	#4	12"	23'-0	156	#6	12"	29'-6	7'-8	3'-0	1'-2½	5'-5	3'-6	#6	12"	33'-3	22'-6	#8	12"	7'-9	70	#5	6"	8'-6	2'-0
	10'	17"	10"	#5	12"	12'-3	#4	12"	25'-0	168	#6	12"	29'-6	7'-8	3'-0	1'-2½	5'-5	3'-6	#6	12"	33'-3	22'-6	#8	12"	7'-9	70	#5	6"	9'-0	2'-3
12'	8'	20½"	12"	#4	15"	11'-0	#4	15"	22'-6	144	#6	10"	35'-0	8'-9	4'-0	1'-6	6'-0	3'-9	#6	10"	40'-0	27'-0	#8	10"	9'-0	70	#4	5"	8'-3	2'-2
	9'	20½"	12"	#4	15"	12'-0	#4	15"	24'-6	156	#6	10"	35'-0	8'-9	4'-0	1'-6	6'-0	3'-9	#6	10"	40'-0	27'-0	#8	10"	9'-0	70	#5	5"	9'-0	2'-4
	10'	20½"	12"	#4	10"	13'-0	#4	10"	26'-6	168	#6	10"	35'-0	8'-9	4'-0	1'-6	6'-0	3'-9	#6	10"	40'-0	27'-0	#8	10"	9'-0	70	#5	5"	9'-9	2'-6
	11'	20½"	12"	#4	10"	14'-0	#4	10"	28'-6	168	#6	10"	34'-9	8'-6	4'-0	1'-6	6'-0	3'-9	#6	10"	40'-0	27'-0	#8	10"	9'-0	70	#5	5"	10'-3	2'-6
	12'	20½"	12"	#4	10"	15'-0	#4	10"	30'-6	180	#6	10"	34'-9	8'-6	4'-0	1'-6	6'-0	3'-9	#6	10"	40'-0	27'-0	#8	10"	9'-0	70	#5	5"	11'-0	2'-9

TABLE NO. V
25'-30' FILL

Span "S"	Height "H"	Top Slab "T"	Walls "W"	aa Size	aa Spacing	aa Length	bb Size	bb Spacing	bb Length	cc ⊕ Number	dd Size	dd Spacing	dd Length	dd A	dd B	dd C	dd D	dd E	ee & eel Size	ee & eel Spacing	ee Length	eel Length	ff Size	ff Spacing	ff Length	gg ⊕ Number	hh Size	hh Spacing	hh Length	F
6'	3'	11½"	8"	#4	15"	4'-6	#4	15"	9'-6	108	#5	10"	18'-6	4'-11	2'-0	9"	3'-2	2'-2	#4	10"	20'-9	14'-3	#5	10"	5'-3	40	#4	5"	4'-3	1'-6
	4'	11½"	8"	#4	15"	5'-6	#4	15"	11'-6	120	#5	10"	18'-6	4'-11	2'-0	9"	3'-2	2'-2	#4	10"	20'-9	14'-3	#5	10"	5'-3	40	#4	5"	4'-9	1'-6
	5'	11½"	8"	#4	15"	6'-6	#4	15"	13'-6	120	#5	10"	18'-6	4'-11	2'-0	9"	3'-2	2'-2	#4	10"	20'-9	14'-3	#5	10"	5'-3	40	#4	5"	5'-3	1'-6
	6'	11½"	8"	#4	15"	7'-6	#4	15"	15'-6	132	#5	10"	18'-6	4'-11	2'-0	9"	3'-2	2'-2	#4	10"	20'-9	14'-3	#5	10"	4'-9	40	#4	5"	6'-0	1'-9
	7'	11½"	8"	#4	10"	8'-6	#4	15"	17'-6	144	#5	10"	18'-6	4'-11	2'-0	9"	3'-2	2'-2	#4	10"	20'-9	14'-3	#5	10"	4'-9	40	#4	5"	6'-6	1'-9
8'	3'	15½"	9"	#4	11"	5'-0	#4	11"	10'-9	108	#5	11"	24'-0	5'-10	3'-0	1'-1	3'-7	2'-5	#5	11"	27'-0	18'-3	#7	11"	7'-0	50	#4	5½"	4'-9	1'-8
	4'	15½"	9"	#4	11"	6'-0	#4	11"	12'-9	120	#5	11"	24'-0	5'-10	3'-0	1'-1	3'-7	2'-5	#5	11"	27'-0	18'-3	#7	11"	7'-0	50	#4	5½"	5'-3	1'-8
	5'	15½"	9"	#4	11"	7'-0	#4	11"	14'-9	120	#5	11"	24'-0	5'-10	3'-0	1'-1	3'-7	2'-5	#5	11"	27'-0	18'-3	#7	11"	6'-6	50	#4	5½"	5'-9	1'-8
	6'	15½"	9"	#4	11"	8'-0	#4	11"	16'-9	132	#5	11"	24'-0	5'-10	3'-0	1'-1	3'-7	2'-5	#5	11"	27'-0	18'-3	#7	11"	6'-6	50	#4	5½"	6'-0	1'-8
	7'	15½"	9"	#4	11"	9'-0	#4	11"	18'-9	144	#5	11"	24'-0	5'-10	3'-0	1'-1	3'-7	2'-5	#5	11"	27'-0	18'-3	#7	11"	6'-6	50	#4	5½"	7'-0	1'-10
	8'	15½"	9"	#4	11"	10'-0	#4	11"	20'-9	144	#5	11"	24'-0	5'-10	3'-0	1'-1	3'-7	2'-5	#5	11"	27'-0	18'-3	#7	11"	6'-6	50	#5	5½"	7'-9	2'-0
10'	3'	19"	10"	#4	11"	5'-9	#4	11"	11'-9	108	#6	11"	29'-6	7'-5	3'-0	1'-4½	5'-1	3'-2	#6	11"	33'-3	22'-6	#8	11"	7'-9	60	#4	5½"	5'-0	1'-7
	4'	19"	10"	#4	11"	6'-9	#4	11"	13'-9	120	#6	11"	29'-6	7'-5	3'-0	1'-4½	5'-1	3'-2	#6	11"	33'-3	22'-6	#8	11"	7'-9	60	#4	5½"	5'-6	1'-7
	5'	19"	10"	#4	11"	7'-9	#4	11"	15'-9	120	#6	11"	29'-6	7'-5	3'-0	1'-4½	5'-1	3'-2	#6	11"	33'-3	22'-6	#8	11"	7'-9	60	#4	5½"	6'-0	1'-7
	6'	19"	10"	#4	11"	8'-9	#4	11"	17'-9	132	#6	11"	29'-6	7'-5	3'-0	1'-4½	5'-1	3'-2	#6	11"	33'-3	22'-6	#8	11"	7'-9	60	#4	5½"	6'-6	1'-7
	7'	19"	10"	#4	11"	9'-9	#4	11"	19'-9	144	#6	11"	29'-6	7'-5	3'-0	1'-4½	5'-1	3'-2	#6	11"	33'-3	22'-6	#8	11"	7'-9	60	#4	5½"	7'-0	2'-0
	8'	19"	10"	#4	13"	10'-9	#4	13"	21'-9	144	#7	13"	30'-0	7'-8	3'-0	1'-4½	5'-1	3'-5	#6	13"	33'-3	22'-6	#8	13"	7'-9	60	#5	6½"	8'-0	2'-0
	9'	19"	10"	#5	13"	11'-9	#4	13"	23'-9	156	#7	13"	30'-0	7'-8	3'-0	1'-4½	5'-1	3'-5	#6	13"	33'-3	22'-6	#8	13"	7'-9	60	#5	6½"	8'-6	2'-0
	10'	19"	10"	#5	11"	12'-9	#4	11"	25'-9	168	#6	11"	29'-6	7'-5	3'-0	1'-4½	5'-1	3'-2	#6	11"	33'-3	22'-6	#8	11"	7'-9	60	#5	5½"	9'-3	2'-3
12'	8'	23"	12"	#4	10"	11'-3	#4	15"	23'-0	144	#6	10"	35'-6	8'-7	4'-0	1'-8½	5'-7	3'-6	#6	10"	40'-0	27'-0	#8	10"	9'-0	70	#4	5"	8'-3	2'-0
	9'	23"	12"	#4	10"	12'-3	#4	15"	25'-0	156	#6	10"	35'-6	8'-7	4'-0	1'-8½	5'-7	3'-6	#6	10"	40'-0	27'-0	#8	10"	9'-0	70	#5	5"	9'-3	2'-4
	10'	23"	12"	#4	10"	13'-3	#4	15"	27'-0	168	#6	10"	35'-6	8'-7	4'-0	1'-8½	5'-7	3'-6	#6	10"	40'-0	27'-0	#8	10"	9'-0	70	#5	5"	9'-9	2'-4
	11'	23"	12"	#5	10"	14'-3	#4	15"	29'-0	168	#6	10"	35'-6	8'-7	4'-0	1'-8½	5'-7	3'-6	#6	10"	40'-0	27'-0	#8	10"	9'-0	70	#5	5"	10'-6	2'-8
	12'	23"	12"	#6	10"	15'-3	#4	15"	31'-0	180	#6	10"	35'-3	8'-4	4'-0	1'-8½	5'-7	3'-6	#6	10"	40'-0	27'-0	#8	10"	9'-0	70	#5	5"	11'-0	2'-8

⊕ Total number of bars in the cross-section.

NOTE:

See Std. CB-5 for Table No. I, typical section, steel call-outs, bend diagrams and quantities.

See Std. CM-1 for general notes and miscellaneous details.

NO.	DESCRIPTION OF REVISIONS	MADE BY	DATE
1	Table II, 6' span, T now 8"	JTW	7-76

DESIGN	DHY	12-71
DRAWN	FDL	8-72
CHECKED	NAB	3-73

DESIGN APPROVED	STATE OF ARIZONA DEPARTMENT OF TRANSPORTATION DIVISION OF HIGHWAYS STANDARD DRAWINGS	REVISION 7-76
R. C. Brechler		
APPROVED FOR DISTRIBUTION	FIVE BARREL BOX CULVERT	STANDARD NO. CB-5A DRAWING NO. B-2.09

QUANTITIES PER LIN. FOOT OF BARRELS													
		Table I		Table II		Table III		Table IV		Table V			
Span "S"	Height "H"	Concrete C.Y.	Reinf. Steel Lbs.	Concrete C.Y.	Reinf. Steel Lbs.	Concrete C.Y.	Reinf. Steel Lbs.	Concrete C.Y.	Reinf. Steel Lbs.	Concrete C.Y.	Reinf. Steel Lbs.		
6'	3'	2.726	491.6	2.726	370.0	2.979	388.7	3.359	398.8	3.612	415.5		
	4'	2.899	495.7	2.899	391.1	3.152	409.7	3.532	419.8	3.786	435.7		
	5'	3.072	507.4	3.072	401.8	3.325	421.4	3.705	431.5	3.958	444.1		
	6'	3.245	528.4	3.245	447.1	3.498	442.4	3.878	449.4	4.131	459.7		
	7'	3.418	549.4	3.418	468.1	3.671	463.4	4.050	470.4	4.303	483.2		
8'	3'	3.617	670.5	4.113	579.0	4.609	566.4	5.271	609.9	5.932	622.0		
	4'	3.811	710.5	4.307	584.2	4.803	586.4	5.465	629.0	6.127	641.1		
	5'	4.171	692.9	4.502	594.9	4.998	635.1	5.659	638.8	6.321	642.7		
	6'	4.365	718.4	4.696	615.0	5.192	654.9	5.854	659.6	6.515	666.6		
	7'	4.560	744.0	4.891	635.0	5.387	674.7	6.048	683.9	6.710	688.0		
	8'	4.754	761.4	5.085	669.5	5.581	686.9	6.243	694.3	6.903	698.3		
10'	3'	4.993	901.3	5.810	797.0	6.831	845.8	7.648	851.2	8.669	891.0		
	4'	5.414	939.4	6.026	817.6	7.047	864.7	8.068	853.6	8.885	910.1		
	5'	5.630	926.7	6.446	830.8	7.468	878.3	8.284	861.6	9.101	919.8		
	6'	5.846	958.5	6.663	851.4	7.684	897.1	8.501	878.9	9.317	938.9		
	7'	6.062	974.9	6.879	872.0	7.900	916.0	8.717	897.6	9.533	963.9		
	8'	6.278	1062.5	7.095	883.2	8.116	930.0	8.933	935.6	9.749	975.9		
	9'	6.494	1092.5	7.311	903.8	8.332	949.3	9.149	954.9	9.966	1023.0		
	10'	6.710	1122.4	7.527	926.3	8.548	968.7	9.363	981.3	10.182	1055.9		
12'	8'	8.497	1372.9	9.721	1157.2	11.190	1203.3	12.415	1205.8	13.639	1327.5		
	9'	8.756	1410.7	9.980	1182.1	11.450	1256.3	12.674	1258.8	13.898	1346.8		
	10'	9.015	1446.4	10.240	1204.8	11.709	1283.7	12.933	1289.0	14.157	1376.1		
	11'	9.275	1472.8	10.499	1218.1	11.968	1295.7	13.192	1298.5	14.417	1430.4		
	12'	9.534	1506.4	10.758	1243.0	12.227	1319.5	13.452	1335.9	14.676	1463.6		

TABLE NO. I
0'-10' FILL

Span "S"	Height "H"	Top Slab "T"	Walls "W"	aa Size	aa Spacing	aa Length	bb Size	bb Spacing	bb Length	cc Number ⊕	dd Size	dd Spacing	dd Length	dd A	dd B	dd C	dd D	dd E	ee Size	ee Spacing	ee Length	ff Size	ff Spacing	ff Length	gg Number ⊕	hh Size	hh Spacing	hh Length	hh F
6'	3'	8"	8"	#4	11"	3'-9	#5	11"	8'-3	128	#5	11"	25'-0	5'-1	2'-3	5½"	3'-6	5'-1	#5	11"	20'-9	#5	11"	14'-6	60	#4	5½"	6'-9	4'-2
	4'	8"	8"	#4	11"	4'-9	#4	11"	10'-3	142	#5	11"	25'-0	5'-1	2'-3	5½"	3'-6	5'-1	#5	11"	20'-9	#5	11"	14'-6	60	#4	5½"	7'-3	4'-2
	5'	8"	8"	#4	11"	5'-9	#4	11"	12'-3	142	#5	11"	25'-0	5'-1	2'-3	5½"	3'-6	5'-1	#5	11"	20'-9	#5	11"	14'-6	60	#4	5½"	7'-9	4'-2
	6'	8"	8"	#4	11"	6'-9	#4	11"	14'-3	156	#5	11"	25'-0	5'-1	2'-3	5½"	3'-6	5'-1	#5	11"	20'-9	#5	11"	14'-6	60	#4	5½"	8'-3	4'-2
	7'	8"	8"	#4	11"	7'-9	#4	11"	16'-3	170	#5	11"	25'-0	5'-1	2'-3	5½"	3'-6	5'-1	#5	11"	20'-9	#5	11"	14'-6	60	#4	5½"	8'-9	4'-2
8'	3'	8½"	9"	#4	14"	4'-0	#5	7"	8'-6	128	#6	14"	31'-9	5'-10	3'-4	6"	4'-5	6'-8	#6	14"	27'-0	#6	14"	18'-9	72	#5	7"	8'-0	5'-3
	4'	8½"	9"	#4	14"	5'-0	#5	7"	10'-6	142	#6	14"	31'-9	5'-10	3'-4	6"	4'-5	6'-8	#6	14"	27'-0	#6	14"	18'-9	84	#5	7"	8'-6	5'-3
	5'	9"	9"	#4	14"	6'-0	#4	7"	12'-6	142	#6	14"	31'-9	6'-0	3'-0	6½"	4'-8	6'-6	#6	14"	27'-0	#6	14"	18'-9	84	#5	7"	9'-0	5'-3
	6'	9"	9"	#4	14"	7'-0	#4	7"	14'-6	156	#6	14"	31'-9	6'-0	3'-0	6½"	4'-8	6'-6	#6	14"	27'-0	#6	14"	18'-9	84	#5	7"	9'-6	5'-3
	7'	9"	9"	#4	14"	8'-0	#4	7"	16'-6	170	#6	14"	31'-9	5'-10	3'-4	6½"	4'-4	6'-8	#6	14"	27'-0	#6	14"	18'-9	84	#5	7"	10'-0	5'-3
	8'	9"	9"	#4	14"	9'-0	#4	7"	18'-6	170	#6	14"	32'-0	6'-1	3'-4	6½"	4'-4	6'-8	#6	14"	27'-0	#6	14"	18'-9	84	#5	7"	10'-6	5'-3
10'	3'	10"	10"	#4	11"	4'-3	#5	5½"	9'-0	128	#6	11"	39'-0	7'-0	4'-2	7½"	5'-5	8'-4	#5	11"	33'-6	#6	11"	23'-0	96	#5	5½"	9'-3	6'-6
	4'	10½"	10"	#4	11"	5'-3	#5	5½"	11'-0	142	#6	11"	39'-0	6'-11	4'-2	8"	5'-4	8'-4	#5	11"	33'-6	#6	11"	23'-0	96	#5	5½"	9'-9	6'-6
	5'	10½"	10"	#4	11"	6'-3	#6	11"	13'-0	142	#6	11"	39'-0	7'-1	4'-2	8"	5'-4	8'-3	#5	11"	33'-6	#6	11"	23'-0	96	#5	5½"	10'-3	6'-6
	6'	10½"	10"	#4	11"	7'-3	#6	11"	15'-0	156	#6	11"	39'-0	7'-2	4'-0	8"	5'-6	8'-2	#5	11"	33'-6	#6	11"	23'-0	96	#5	5½"	10'-9	6'-6
	7'	10½"	10"	#4	11"	8'-3	#4	5½"	17'-0	170	#6	11"	39'-0	7'-2	4'-0	8"	5'-6	8'-2	#5	11"	33'-6	#6	11"	23'-0	96	#5	5½"	11'-3	6'-6
	8'	10½"	10"	#4	11"	9'-3	#4	5½"	19'-0	170	#6	11"	39'-0	7'-2	4'-0	8"	5'-6	8'-2	#6	11"	33'-6	#6	11"	23'-0	96	#5	5½"	11'-9	6'-6
	9'	10½"	10"	#4	11"	10'-3	#4	5½"	21'-0	184	#6	11"	39'-0	7'-2	4'-0	8"	5'-6	8'-2	#6	11"	33'-6	#6	11"	23'-0	96	#5	5½"	12'-3	6'-6
	10'	10½"	10"	#4	11"	11'-3	#4	5½"	23'-0	198	#6	11"	39'-0	7'-2	4'-0	8"	5'-6	8'-2	#6	11"	33'-6	#6	11"	23'-0	96	#5	5½"	12'-9	6'-6
12'	8'	12½"	12"	#4	12"	9'-6	#5	6"	20'-0	170	#7	12"	46'-9	8'-5	5'-0	10"	6'-4	9'-9	#6	12"	40'-0	#7	12"	27'-6	120	#5	6"	13'-3	7'-8
	9'	12½"	12"	#4	12"	10'-6	#5	6"	22'-0	184	#7	12"	47'-0	8'-7	5'-0	10"	6'-4	9'-9	#6	12"	40'-0	#7	12"	27'-6	120	#5	6"	13'-9	7'-8
	10'	12½"	12"	#4	12"	11'-6	#5	6"	24'-0	198	#7	12"	47'-0	8'-7	5'-0	10"	6'-4	9'-9	#6	12"	40'-0	#7	12"	27'-6	120	#5	6"	14'-3	7'-8
	11'	12½"	12"	#4	12"	12'-6	#5	6"	26'-0	198	#7	12"	47'-0	8'-7	5'-0	10"	6'-4	9'-9	#6	12"	40'-0	#7	12"	27'-6	120	#5	6"	14'-9	7'-8
	12'	12½"	12"	#4	12"	13'-6	#5	6"	28'-0	212	#7	12"	46'-9	8'-5	5'-0	10"	6'-4	9'-9	#6	12"	40'-0	#7	12"	27'-6	120	#5	6"	15'-3	7'-8

⊕ Total number of bars in the cross-section.

Height "H"	"J" Dim.	"K" Spaces
3'	9"	1
4'	3"	2
5'	12"	2
6'	9"	3
7'	3"	4
8'	12"	4
9'	9"	5
10'	3"	6
11'	12"	6
12'	9"	7

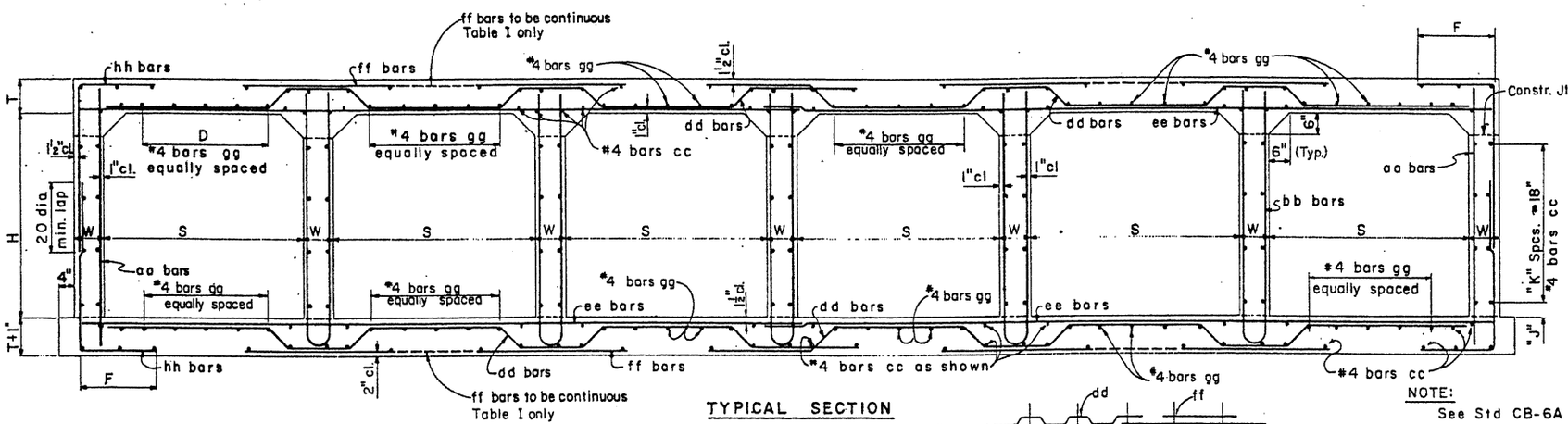

TYPICAL SECTION

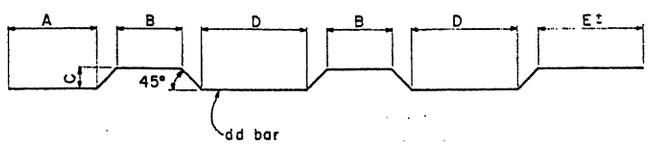

BENDS

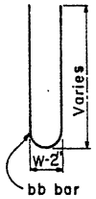

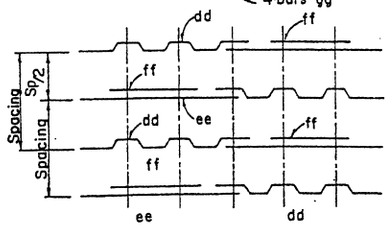

SIX BARREL REINF. PLACING DIAGRAM
For Table I only

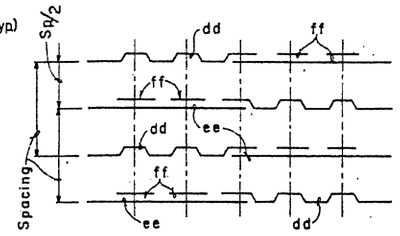

SIX BARREL REINF. PLACING DIAGRAM
For Tables II through V

NOTE:
See Std CB-6A for Tables II thru V.
See Std CM-1 for general notes and miscellaneous details.
All bend dimensions are out to out of bar.

DESIGN	DHY	12-71	NO.	DESCRIPTION OF REVISIONS	MADE BY	DATE
DRAWN	CAG	8-72	1	Table I ff bars & quantities	JTW	7-76
CHECKED	NAB	3-73	2			
			3			

DESIGN APPROVED	STATE OF ARIZONA DEPARTMENT OF TRANSPORTATION DIVISION OF HIGHWAYS STANDARD DRAWINGS	REVISION
R.C. Bradley		7-76
APPROVED FOR DISTRIBUTION	SIX BARREL BOX CULVERT	STANDARD NO. CB-6
		DRAWING NO. B-2.10

TABLE NO. II
10'-15' FILL

Span "S"	Height "H"	Top Slab "T"	Walls "W"	aa Size	aa Spacing	aa Length	bb Size	bb Spacing	bb Length	cc Number ⊕	dd Size	dd Spacing	dd Length	dd A	dd B	dd C	dd D	dd E	ee Size	ee Spacing	ee Length	ff Size	ff Spacing	ff Length	gg Number ⊕	hh Size	hh Spacing	hh Length	hh F
6'	3'	8"	8"	#4	12"	3'-9	#4	12"	8'-0	128	#5	12"	22'-9	4'-5	2'-6	5"	3'-4	3'-8	#4	12"	20'-9	#5	12"	4'-9	60	#4	6"	4'-3	1'-9
	4'	8"	8"	#4	12"	4'-9	#4	12"	10'-0	142	#5	12"	23'-0	4'-8	2'-6	5"	3'-4	3'-8	#4	12"	20'-9	#5	12"	4'-9	60	#4	6"	4'-9	1'-9
	5'	8"	8"	#4	12"	5'-9	#4	12"	12'-0	142	#5	12"	23'-0	4'-8	2'-6	5"	3'-4	3'-8	#4	12"	20'-9	#5	12"	4'-9	60	#4	6"	5'-3	1'-9
	6'	8"	8"	#4	11"	6'-9	#4	11"	14'-0	156	#5	11"	23'-0	4'-8	2'-6	5"	3'-4	3'-8	#4	11"	20'-9	#5	11"	4'-9	60	#4	5½"	5'-9	1'-9
	7'	8"	8"	#4	11"	7'-9	#4	11"	16'-0	170	#5	11"	23'-0	4'-8	2'-6	5"	3'-4	3'-8	#4	11"	20'-9	#5	11"	4'-9	60	#4	5½"	6'-3	1'-9
8'	3'	10"	9"	#4	12"	4'-3	#4	12"	9'-0	128	#6	12"	30'-0	5'-11	3'-0	7½"	4'-6	4'-8	#5	12"	27'-0	#6	12"	6'-3	72	#5	6"	5'-0	2'-3
	4'	10"	9"	#4	12"	5'-3	#4	12"	11'-0	142	#6	12"	30'-3	6'-2	3'-0	7½"	4'-6	4'-8	#5	12"	27'-0	#6	12"	6'-3	72	#4	6"	5'-3	2'-0
	5'	10"	9"	#4	12"	6'-3	#4	12"	13'-0	142	#6	12"	30'-3	6'-2	3'-0	7½"	4'-6	4'-8	#5	12"	27'-0	#6	12"	6'-3	72	#4	6"	5'-9	2'-0
	6'	10"	9"	#4	12"	7'-3	#4	12"	15'-0	156	#6	12"	30'-3	6'-2	3'-0	7½"	4'-6	4'-8	#5	12"	27'-0	#6	12"	6'-3	72	#4	6"	6'-3	2'-0
	7'	10"	9"	#4	12"	8'-3	#4	12"	17'-0	170	#6	12"	30'-3	6'-2	3'-0	7½"	4'-6	4'-8	#5	12"	27'-0	#6	12"	6'-3	72	#4	6"	6'-9	2'-0
	8'	10"	9"	#4	12"	9'-3	#4	12"	19'-0	170	#6	12"	30'-3	6'-2	3'-0	7½"	4'-6	4'-8	#5	12"	27'-0	#6	12"	6'-3	72	#5	6"	7'-6	2'-3
10'	3'	12"	10"	#4	13"	4'-6	#4	13"	9'-6	128	#7	13"	37'-3	7'-6	3'-6	9½"	5'-9	5'-6	#6	13"	33'-6	#7	13"	7'-6	84	#5	6½"	5'-3	2'-3
	4'	12"	10"	#4	13"	5'-6	#4	13"	11'-6	142	#7	13"	37'-3	7'-6	3'-6	9½"	5'-9	5'-6	#6	13"	33'-6	#7	13"	7'-6	84	#5	6½"	5'-9	2'-3
	5'	12½"	10"	#4	13"	6'-6	#4	13"	13'-6	142	#7	13"	37'-6	7'-9	3'-6	10"	5'-6	5'-6	#6	13"	33'-6	#7	13"	7'-6	84	#5	6½"	6'-3	2'-3
	6'	12½"	10"	#4	13"	7'-6	#4	13"	15'-6	156	#7	13"	37'-6	7'-9	3'-6	10"	5'-6	5'-6	#6	13"	33'-6	#7	13"	7'-6	84	#5	6½"	6'-9	2'-3
	7'	12½"	10"	#4	13"	8'-6	#4	13"	17'-6	170	#7	13"	37'-6	7'-9	3'-6	10"	5'-8	5'-6	#6	13"	33'-6	#7	13"	7'-6	84	#5	6½"	7'-3	2'-3
	8'	12½"	10"	#4	13"	9'-6	#4	13"	19'-6	170	#7	13"	37'-6	7'-9	3'-6	10"	5'-8	5'-6	#6	13"	33'-6	#7	13"	7'-6	84	#5	6½"	7'-9	2'-3
	9'	12½"	10"	#4	13"	10'-6	#4	13"	21'-6	184	#7	13"	37'-6	7'-9	3'-6	10"	5'-8	5'-6	#6	13"	33'-6	#7	13"	7'-6	84	#5	6½"	8'-3	2'-3
	10'	12½"	10"	#4	13"	11'-6	#4	13"	23'-6	198	#7	13"	37'-6	7'-9	3'-6	10"	5'-8	5'-6	#6	13"	33'-6	#7	13"	7'-6	84	#5	6½"	9'-0	2'-6
12'	8'	15"	12"	#4	11"	10'-0	#4	11"	20'-6	170	#7	11"	44'-6	8'-7	4'-6	12½"	6'-5	6'-8	#6	11"	40'-0	#7	11"	8'-9	96	#5	5½"	8'-3	2'-6
	9'	15"	12"	#4	11"	11'-0	#4	11"	22'-6	184	#7	11"	44'-9	8'-10	4'-6	12½"	6'-5	6'-8	#6	11"	40'-0	#7	11"	8'-9	96	#5	5½"	8'-9	2'-6
	10'	15"	12"	#4	11"	12'-0	#4	11"	24'-6	198	#7	11"	44'-6	8'-7	4'-6	12½"	6'-5	6'-8	#6	11"	40'-0	#7	11"	8'-9	96	#5	5½"	9'-6	2'-9
	11'	15"	12"	#4	11"	13'-0	#4	11"	26'-6	198	#7	11"	44'-6	8'-7	4'-6	12½"	6'-5	6'-8	#6	11"	40'-0	#7	11"	8'-9	96	#5	5½"	10'-0	2'-9
	12'	15"	12"	#4	11"	14'-0	#4	11"	28'-6	212	#7	11"	44'-6	8'-7	4'-6	12½"	6'-5	6'-8	#6	11"	40'-0	#7	11"	8'-9	96	#5	5½"	10'-9	3'-0

TABLE NO. III
15'-20' FILL

Span "S"	Height "H"	Top Slab "T"	Walls "W"	aa Size	aa Spacing	aa Length	bb Size	bb Spacing	bb Length	cc Number ⊕	dd Size	dd Spacing	dd Length	dd A	dd B	dd C	dd D	dd E	ee Size	ee Spacing	ee Length	ff Size	ff Spacing	ff Length	gg Number ⊕	hh Size	hh Spacing	hh Length	hh F
6'	3'	9"	8"	#4	11"	4'-0	#4	11"	8'-6	128	#5	11"	23'-3	4'-6	2'-6	6½"	3'-1	3'-8	#4	11"	20'-9	#5	11"	4'-9	48	#4	5½"	4'-3	1'-8
	4'	9"	8"	#4	11"	5'-0	#4	11"	10'-6	142	#5	11"	23'-3	4'-6	2'-6	6½"	3'-1	3'-8	#4	11"	20'-9	#5	11"	4'-9	48	#4	5½"	4'-9	1'-8
	5'	9"	8"	#4	11"	6'-0	#4	11"	12'-6	142	#5	11"	23'-3	4'-6	2'-6	6½"	3'-1	3'-8	#4	11"	20'-9	#5	11"	4'-9	48	#4	5½"	5'-3	1'-8
	6'	9"	8"	#4	11"	7'-0	#4	11"	14'-6	156	#5	11"	23'-3	4'-6	2'-6	6½"	3'-1	3'-8	#4	11"	20'-9	#5	11"	4'-9	48	#4	5½"	5'-9	1'-8
	7'	9"	8"	#4	11"	8'-0	#4	11"	16'-6	170	#5	11"	23'-3	4'-6	2'-6	6½"	3'-1	3'-8	#4	11"	20'-9	#5	11"	4'-9	48	#4	5½"	6'-3	1'-8
8'	3'	11½"	9"	#4	12"	4'-6	#4	12"	9'-6	128	#6	12"	30'-6	6'-0	3'-0	9"	4'-3	4'-8	#5	12"	27'-0	#6	12"	6'-3	72	#4	6"	4'-6	1'-9
	4'	11½"	9"	#4	12"	5'-6	#4	12"	11'-6	142	#6	12"	30'-6	6'-0	3'-0	9"	4'-3	4'-8	#5	12"	27'-0	#6	12"	6'-3	72	#4	6"	5'-0	1'-9
	5'	11½"	9"	#4	14"	6'-6	#4	14"	13'-6	142	#7	14"	30'-9	6'-2	3'-0	9"	4'-3	4'-9	#5	14"	27'-0	#7	14"	6'-6	72	#5	7"	6'-0	2'-0
	6'	11½"	9"	#4	14"	7'-6	#4	14"	15'-6	156	#7	14"	30'-9	6'-2	3'-0	9"	4'-3	4'-9	#5	14"	27'-0	#7	14"	6'-6	72	#5	7"	6'-6	2'-0
	7'	11½"	9"	#4	14"	8'-6	#4	14"	17'-6	170	#7	14"	30'-9	6'-2	3'-0	9"	4'-3	4'-9	#5	14"	27'-0	#7	14"	6'-6	72	#5	7"	7'-0	2'-0
	8'	11½"	9"	#4	14"	9'-6	#4	14"	19'-6	170	#7	14"	30'-9	6'-5	2'-6	9"	4'-9	4'-6	#5	14"	27'-0	#7	14"	6'-6	72	#5	7"	7'-9	2'-4
10'	3'	14½"	10"	#4	18"	5'-0	#4	18"	10'-6	128	#7	12"	37'-9	7'-9	3'-0	1'-0	5'-10	5'-3	#6	12"	33'-6	#7	12"	7'-6	84	#5	6"	5'-3	2'-0
	4'	14½"	10"	#4	18"	6'-0	#4	18"	12'-6	142	#7	12"	37'-9	7'-9	3'-0	1'-0	5'-10	5'-3	#6	12"	33'-6	#7	12"	7'-6	84	#5	6"	5'-9	2'-0
	5'	15"	10"	#4	18"	7'-0	#4	18"	14'-6	142	#7	12"	38'-3	7'-11	3'-0	1'-0½	5'-9	5'-3	#6	12"	33'-6	#7	12"	7'-6	84	#5	6"	6'-3	2'-0
	6'	15"	10"	#4	18"	8'-0	#4	18"	16'-6	156	#7	12"	38'-3	7'-11	3'-0	1'-0½	5'-9	5'-3	#6	12"	33'-6	#7	12"	7'-6	84	#5	6"	6'-9	2'-0
	7'	15"	10"	#4	18"	9'-0	#4	18"	18'-6	170	#7	12"	38'-3	7'-11	3'-0	1'-0½	5'-9	5'-3	#6	12"	33'-6	#7	12"	7'-6	84	#5	6"	7'-3	2'-0
	8'	15"	10"	#4	12"	10'-0	#4	18"	20'-6	170	#7	12"	38'-3	7'-11	3'-0	1'-0½	5'-9	5'-3	#6	12"	33'-6	#7	12"	7'-6	84	#5	6"	7'-9	2'-0
	9'	15"	10"	#4	12"	11'-0	#4	18"	22'-6	184	#7	12"	38'-0	7'-9	3'-0	1'-0½	5'-9	5'-3	#6	12"	33'-6	#7	12"	7'-6	84	#5	6"	8'-6	2'-4
	10'	15"	10"	#4	12"	12'-0	#4	18"	24'-6	198	#7	12"	38'-0	7'-9	3'-0	1'-0½	5'-9	5'-3	#6	12"	33'-6	#7	12"	7'-6	84	#5	6"	9'-0	2'-4
12'	8'	18"	12"	#4	15"	10'-6	#4	15"	21'-6	170	#7	10"	45'-3	8'-11	4'-0	1'-3½	6'-5	6'-5	#6	10"	40'-0	#7	10"	8'-9	96	#4	5"	8'-3	2'-4
	9'	18"	12"	#4	15"	11'-6	#4	15"	23'-6	184	#7	10"	45'-3	8'-11	4'-0	1'-3½	6'-5	6'-5	#6	10"	40'-0	#7	10"	8'-9	96	#5	5"	9'-0	2'-6
	10'	18"	12"	#4	10"	12'-6	#4	15"	25'-6	198	#7	10"	45'-3	8'-11	4'-0	1'-3½	6'-5	6'-5	#6	10"	40'-0	#7	10"	8'-9	96	#5	5"	9'-6	2'-6
	11'	18"	12"	#4	10"	13'-6	#4	15"	27'-6	198	#7	10"	45'-3	8'-11	4'-0	1'-3½	6'-5	6'-5	#6	10"	40'-0	#7	10"	8'-9	96	#5	5"	10'-0	2'-6
	12'	18"	12"	#4	10"	14'-6	#4	15"	29'-6	212	#7	10"	45'-3	8'-11	4'-0	1'-3½	6'-5	6'-5	#6	10"	40'-0	#7	10"	8'-9	96	#5	5"	10'-9	2'-9

TABLE NO. IV
20'-25' FILL

Span "S"	Height "H"	Top Slab "T"	Walls "W"	aa Size	aa Spacing	aa Length	bb Size	bb Spacing	bb Length	cc Number ⊕	dd Size	dd Spacing	dd Length	dd A	dd B	dd C	dd D	dd E	ee Size	ee Spacing	ee Length	ff Size	ff Spacing	ff Length	gg Number ⊕	hh Size	hh Spacing	hh Length	hh F
6'	3'	10½"	8"	#4	11"	4'-3	#4	11"	9'-0	128	#5	11"	24'-0	4'-8	2'-6	8"	2'-10	3'-11	#4	11"	20'-9	#5	11"	5'-3	48	#4	5½"	4'-3	1'-6
	4'	10½"	8"	#4	11"	5'-3	#4	11"	11'-0	142	#5	11"	24'-0	4'-8	2'-6	8"	2'-10	3'-11	#4	11"	20'-9	#5	11"	5'-3	48	#4	5½"	4'-9	1'-6
	5'	10½"	8"	#4	11"	6'-3	#4	11"	13'-0	142	#5	11"	24'-0	4'-8	2'-6	8"	2'-10	3'-11	#4	11"	20'-9	#5	11"	5'-3	48	#4	5½"	5'-3	1'-6
	6'	10½"	8"	#4	11"	7'-3	#4	11"	15'-0	156	#5	11"	24'-0	4'-8	2'-6	8"	2'-10	3'-11	#4	11"	20'-9	#5	11"	4'-9	48	#4	5½"	6'-0	1'-9
	7'	10½"	8"	#4	11"	8'-3	#4	11"	17'-0	170	#5	11"	24'-0	4'-8	2'-6	8"	2'-10	3'-11	#4	11"	20'-9	#5	11"	4'-9	48	#4	5½"	6'-6	1'-9
8'	3'	13½"	9"	#4	15"	4'-9	#4	15"	10'-0	128	#7	15"	31'-6	6'-4	3'-0	11"	3'-11	4'-9	#6	15"	27'-0	#7	15"	6'-6	60	#5	7½"	4'-9	1'-9
	4'	13½"	9"	#4	15"	5'-9	#4	15"	12'-0	142	#7	15"	31'-6	6'-4	3'-0	11"	3'-11	4'-9	#6	15"	27'-0	#7	15"	6'-6	60	#5	7½"	5'-3	1'-9
	5'	13½"	9"	#4	15"	6'-9	#4	15"	14'-0	142	#7	15"	31'-6	6'-4	3'-0	11"	3'-11	4'-9	#6	15"	27'-0	#7	15"	6'-6	60	#5	7½"	5'-9	1'-9
	6'	13½"	9"	#4	15"	7'-9	#4	15"	16'-0	156	#7	15"	31'-6	6'-4	3'-0	11"	3'-11	4'-9	#6	15"	27'-0	#7	15"	6'-6	60	#5	7½"	6'-6	2'-0
	7'	13½"	9"	#5	15"	8'-9	#4	15"	18'-0	170	#7	15"	31'-6	6'-4	3'-0	11"	3'-11	4'-9	#6	15"	27'-0	#7	15"	6'-6	60	#5	7½"	7'-0	2'-0
	8'	13½"	9"	#5	15"	9'-9	#4	15"	20'-0	170	#7	15"	31'-6	6'-4	3'-0	11"	3'-11	4'-9	#6	15"	27'-0	#7	15"	6'-6	60	#5	7½"	7'-6	2'-0
10'	3'	16½"	10"	#4	18"	5'-3	#4	18"	11'-0	128	#7	12"	38'-6	7'-10	3'-0	1'-2	5'-6	5'-3	#6	12"	33'-6	#7	12"	7'-6	84	#5	6"	5'-0	1'-9
	4'	17"	10"	#4	18"	6'-3	#4	18"	13'-0	142	#7	12"	38'-6	7'-10	3'-0	1'-2½	5'-5	5'-3	#6	12"	33'-6	#7	12"	7'-6	84	#4	6"	5'-6	1'-9
	5'	17"	10"	#4	18"	7'-3	#4	18"	15'-0	142	#7	12"	38'-6	7'-10	3'-0	1'-2½	5'-5	5'-3	#6	12"	33'-6	#7	12"	7'-6	84	#4	6"	6'-0	1'-9
	6'	17"	10"	#4	18"	8'-3	#4	18"	17'-0	156	#7	12"	38'-6	7'-10	3'-0	1'-2½	5'-5	5'-3	#6	12"	33'-6	#7	12"	7'-6	84	#4	6"	6'-6	1'-9
	7'	17"	10"	#4	18"	9'-3	#4	18"	19'-0	170	#7	12"	38'-6	7'-10	3'-0	1'-2½	5'-5	5'-3	#6	12"	33'-6	#7	12"	7'-6	84	#4	6"	7'-3	2'-0
	8'	17"	10"	#4	12"	10'-3	#4	18"	21'-0	170	#7	12"	38'-6	7'-10	3'-0	1'-2½	5'-5	5'-3	#6	12"	33'-6	#7	12"	7'-6	84	#5	6"	8'-0	2'-0
	9'	17"	10"	#4	12"	11'-3	#4	18"	23'-0	184	#7	12"	38'-6	7'-10	3'-0	1'-2½	5'-5	5'-3	#6	12"	33'-6	#7	12"	7'-6	84	#5	6"	8'-6	2'-0
	10'	17"	10"	#5	12"	12'-3	#4	18"	25'-0	198	#7	12"	38'-6	7'-10	3'-0	1'-2½	5'-5	5'-3	#6	12"	33'-6	#7	12"	7'-6	84	#5	6"	9'-0	2'-3
12'	8'	20½"	12"	#4	15"	11'-0	#4	15"	22'-6	170	#7	10"	46'-0	8'-10	4'-0	1'-6	6'-0	6'-5	#6	10"	40'-0	#7	10"	8'-9	84	#4	5"	8'-3	2'-2
	9'	20½"	12"	#4	15"	12'-0	#4	15"	24'-6	184	#7	10"	46'-0	8'-10	4'-0	1'-6	6'-0	6'-5	#6	10"	40'-0	#7	10"	8'-9	84	#5	5"	9'-0	2'-4
	10'	20½"	12"	#4	10"	13'-0	#4	15"	26'-6	198	#7	10"	46'-0	8'-10	4'-0	1'-6	6'-0	6'-5	#6	10"	40'-0	#7	10"	8'-9	84	#5	5"	9'-9	2'-6
	11'	20½"	12"	#4	10"	14'-0	#4	15"	28'-6	198	#7	10"	45'-9	8'-8	4'-0	1'-6	6'-0	6'-5	#6	10"	40'-0	#7	10"	8'-9	84	#5	5"	10'-3	2'-6
	12'	20½"	12"	#5	10"	15'-0	#4	15"	30'-6	212	#7	10"	45'-9	8'-8	4'-0	1'-6	6'-0	6'-5	#6	10"	40'-0	#7	10"	8'-9	84	#5	5"	11'-0	2'-9

TABLE NO. V
25'-30' FILL

Span "S"	Height "H"	Top Slab "T"	Walls "W"	aa Size	aa Spacing	aa Length	bb Size	bb Spacing	bb Length	cc Number ⊕	dd Size	dd Spacing	dd Length	dd A	dd B	dd C	dd D	dd E	ee Size	ee Spacing	ee Length	ff Size	ff Spacing	ff Length	gg Number ⊕	hh Size	hh Spacing	hh Length	hh F
6'	3'	11½"	8"	#4	15"	4'-6	#4	15"	9'-6	128	#5	10"	24'-6	4'-11	2'-0	9"	3'-2	3'-8	#4	10"	20'-9	#5	10"	5'-3	48	#4	5"	4'-3	1'-6
	4'	11½"	8"	#4	15"	5'-6	#4	15"	11'-6	142	#5	10"	24'-6	4'-11	2'-0	9"	3'-2	3'-8	#4	10"	20'-9	#5	10"	5'-3	48	#4	5"	4'-9	1'-6
	5'	11½"	8"	#4	15"	6'-6	#4	15"	13'-6	142	#5	10"	24'-3	4'-11	2'-0	9"	3'-2	3'-8	#4	10"	20'-9	#5	10"	5'-3	48	#4	5"	5'-3	1'-6
	6'	11½"	8"	#4	15"	7'-6	#4	15"	15'-6	156	#5	10"	24'-3	4'-11	2'-0	9"	3'-2	3'-5	#4	10"	20'-9	#5	10"	4'-9	48	#4	5"	6'-0	1'-9
	7'	11½"	8"	#4	10"	8'-6	#4	15"	17'-6	170	#5	10"	24'-3	4'-11	2'-0	9"	3'-2	3'-5	#4	10"	20'-9	#5	10"	4'-9	48	#4	5"	6'-6	1'-9
8'	3'	15½"	9"	#4	15"	5'-0	#4	15"	10'-9	128	#7	15"	31'-9	6'-0	3'-0	1'-1	3'-7	5'-0	#6	15"	27'-0	#7	15"	7'-0	60	#5	7½"	5'-0	1'-9
	4'	15½"	9"	#4	15"	6'-0	#4	15"	12'-9	142	#7	15"	31'-9	6'-0	3'-0	1'-1	3'-7	5'-0	#6	15"	27'-0	#7	15"	7'-0	60	#5	7½"	5'-6	1'-9
	5'	15½"	9"	#4	15"	7'-0	#4	15"	14'-9	142	#7	15"	31'-6	6'-0	3'-0	1'-1	3'-7	4'-9	#6	15"	27'-0	#7	15"	6'-6	60	#5	7½"	6'-0	1'-9
	6'	15½"	9"	#5	15"	8'-0	#4	15"	16'-9	156	#7	15"	31'-6	6'-0	3'-0	1'-1	3'-7	4'-9	#6	15"	27'-0	#7	15"	6'-6	60	#5	7½"	6'-6	1'-9
	7'	15½"	9"	#5	15"	9'-0	#4	15"	18'-9	170	#7	15"	31'-6	6'-0	3'-0	1'-1	3'-7	4'-9	#6	15"	27'-0	#7	15"	6'-6	60	#5	7½"	7'-3	2'-0
	8'	15½"	9"	#5	15"	10'-0	#4	15"	20'-9	170	#7	15"	31'-6	6'-0	3'-0	1'-1	3'-7	4'-9	#6	15"	27'-0	#7	15"	6'-6	60	#5	7½"	7'-9	2'-0
10'	3'	19"	10"	#4	15"	5'-9	#4	15"	11'-9	128	#8	15"	39'-0	7'-9	3'-0	1'-4½	5'-1	5'-5	#7	15"	33'-6	#8	15"	7'-9	72	#5	7½"	5'-3	1'-9
	4'	19"	10"	#4	15"	6'-9	#4	15"	13'-9	142	#8	15"	39'-0	7'-9	3'-0	1'-4½	5'-1	5'-5	#7	15"	33'-6	#8	15"	7'-9	72	#5	7½"	5'-9	1'-9
	5'	19"	10"	#4	15"	7'-9	#4	15"	15'-9	142	#8	15"	39'-0	7'-9	3'-0	1'-4½	5'-1	5'-5	#7	15"	33'-6	#8	15"	7'-9	72	#5	7½"	6'-3	1'-9
	6'	19"	10"	#4	15"	8'-9	#4	15"	17'-9	156	#8	15"	39'-0	7'-9	3'-0	1'-4½	5'-1	5'-5	#7	15"	33'-6	#8	15"	7'-9	72	#5	7½"	6'-9	1'-9
	7'	19"	10"	#5	15"	9'-9	#4	15"	19'-9	170	#8	15"	39'-0	7'-9	3'-0	1'-4½	5'-1	5'-5	#7	15"	33'-6	#8	15"	7'-9	72	#5	7½"	7'-3	1'-9
	8'	19"	10"	#5	15"	10'-9	#4	15"	21'-9	170	#8	15"	39'-0	7'-9	3'-0	1'-4½	5'-1	5'-5	#7	15"	33'-6	#8	15"	7'-9	72	#5	7½"	8'-0	2'-0
	9'	19"	10"	#5	15"	11'-9	#4	15"	23'-9	184	#8	15"	39'-0	7'-9	3'-0	1'-4½	5'-1	5'-5	#7	15"	33'-6	#8	15"	7'-9	72	#6	7½"	8'-9	2'-3
	10'	19"	10"	#6	15"	12'-9	#4	15"	25'-9	198	#8	15"	39'-0	7'-9	3'-0	1'-4½	5'-1	5'-5	#7	15"	33'-6	#8	15"	7'-9	72	#6	7½"	9'-6	2'-6
12'	8'	23"	12"	#4	12"	11'-3	#4	18"	23'-0	170	#8	12"	46'-9	8'-10	4'-0	1'-8½	5'-7	6'-6	#7	12"	40'-0	#8	12"	9'-0	84	#5	6"	8'-9	2'-1
	9'	23"	12"	#4	12"	12'-3	#4	18"	25'-0	184	#8	12"	46'-9	8'-10	4'-0	1'-8½	5'-7	6'-6	#7	12"	40'-0	#8	12"	9'-0	84	#5	6"	9'-3	2'-4
	10'	23"	12"	#5	12"	14'-3	#4	18"	27'-0	198	#8	12"	46'-9	8'-10	4'-0	1'-8½	5'-7	6'-6	#7	12"	40'-0	#8	12"	9'-0	84	#5	6"	9'-9	2'-4
	11'	23"	12"	#5	12"	15'-3	#4	18"	29'-0	198	#8	12"	46'-9	8'-10	4'-0	1'-8½	5'-7	6'-6	#7	12"	40'-0	#8	12"	9'-0	84	#6	6"	10'-9	2'-10
	12'	23"	12"	#6	12"	15'-3	#4	18"	31'-0	212	#8	12"	46'-6	8'-7	4'-0	1'-8½	5'-7	6'-6	#7	12"	40'-0	#8	12"	9'-0	84	#6	6"	11'-3	2'-10

⊕ Total number of bars in the cross-section.

NOTE:

See Std. CB-6 for Table No. I, typical section, steel call-outs, bend diagrams and quantities.

See Std. CM-1 for general notes and miscellaneous details.

NO.	DATE	DESCRIPTION OF REVISIONS	MADE BY	DATE
①		Table II, 6' span, T now 8"	JTW	7-76
②				
③				

DESIGN	DHY	12-71
DRAWN	CAG	8-72
CHECKED	MAB	3-73

DESIGN APPROVED: R.C. Buchler

APPROVED FOR DISTRIBUTION: [signature]

STATE OF ARIZONA
DEPARTMENT OF TRANSPORTATION
DIVISION OF HIGHWAYS
STANDARD DRAWINGS

SIX BARREL BOX CULVERT

REVISION: 7-76

STANDARD NO. CB-6A

DRAWING NO. B-2.11

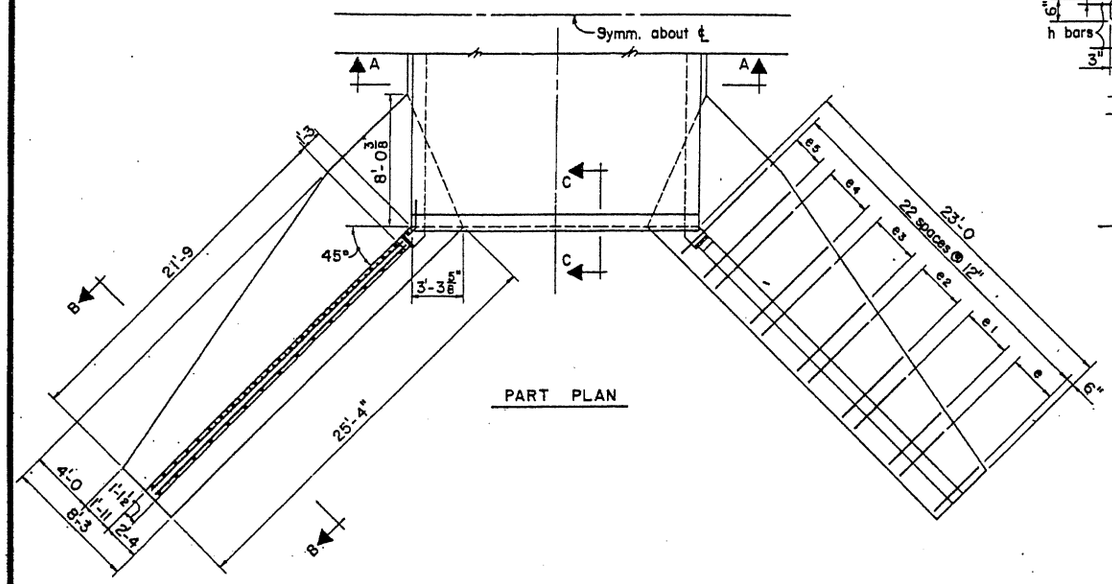

PART PLAN

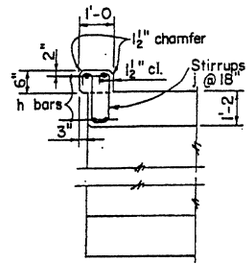

SECTION C-C

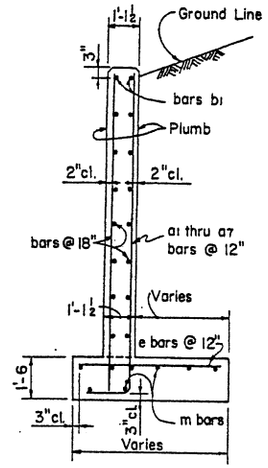

SECTION B-B

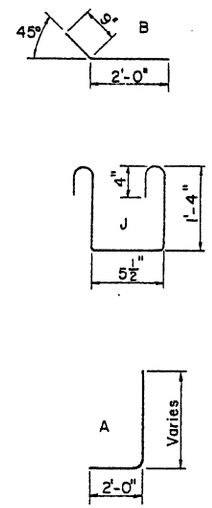

BENDS

STEEL LISTS

HEADWALL STEEL LIST

Mark	Bend	Size	No.	Lgth.	Mark	Bend	Size	No.	Lgth.
a	A	#5	6	10'-9	b	B	#4	20	2'-9
a1	A	#5	6	11'-9	b1	str.	#6	4	22'-9
a2	A	#5	6	12'-9	b2	str.	#4	20	21'-6
a3	A	#6	6	13'-9	b3	str.	#4	4	18'-6
a4	A	#6	6	14'-9	b4	str.	#4	4	14'-6
a5	A	#6	6	16'-0	b5	str.	#4	4	10'-6
a6	A	#6	6	17'-0	b6	str.	#4	4	6'-0
a7	A	#7	4	18'-3	e	str.	#5	8	3'-9
a8	str.	#8	16	7'-3	e1	str.	#5	8	4'-6
a9	str.	#6	16	5'-3	e2	str.	#6	8	5'-3
a10	str.	#4	6	8'-9	e3	str.	#7	8	6'-0
a11	str.	#4	6	10'-3	e4	str.	#8	8	6'-9
a12	str.	#4	6	11'-9	e5	str.	#9	6	7'-3
a13	str.	#4	6	13'-3	CURB				
a14	str.	#4	6	15'-0	h	str.	#8	4	17'-6
m	str.	#4	16	22'-6	j	J	#4	12	4'-3

HEADWALL QUANTITIES

Concrete	41.50 C.Y.	Steel	3173#

BARREL STEEL LIST

FILL	TABLE I 0 to 5'	TABLE II 5.01' to 10'	TABLE III 10.01' to 15'	TABLE IV 15.01' to 20'
Top Slab (T)	13.5"	16.5"	19.5"	21.5"
Bars aa	#4 @ 18"	#4 @ 16"	#4 @ 15"	#4 @ 14"
Bars cc (No.)	56	56	56	56
Bars ee	#9 @ 9"	#9 @ 8"	#10 @ 7 1/2"	#10 @ 7"
Bars ee1	#9 @ 9"	#10 @ 8"	#10 @ 7 1/2"	#10 @ 7"
Bars gg (No.)	38	24	24	24
Bars hh	#7 @ 9"	#7 @ 8"	#7 @ 7 1/2"	#7 @ 7"
Bars hh1	#8 @ 9"	#8 @ 8"	#8 @ 7 1/2"	#8 @ 7"

BARREL QUANTITIES

Steel	392.84	448.45	500.07	531.97
Concrete	2.632	2.971	3.311	3.537

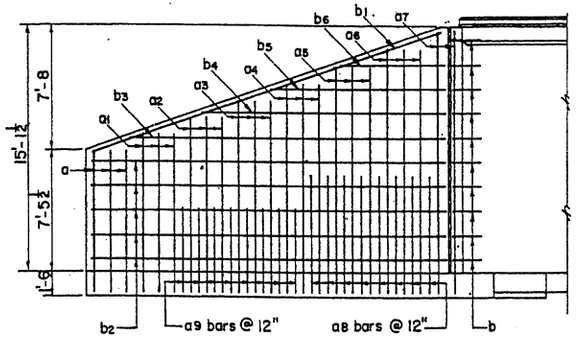

WING ELEVATION
(Back Face Reinf.)

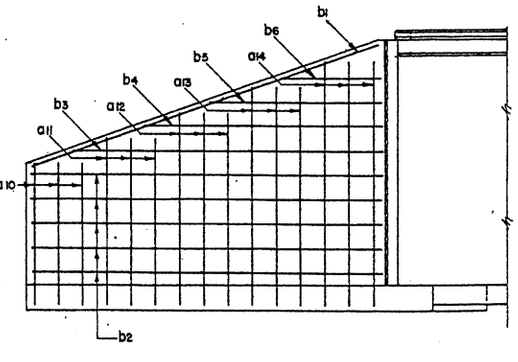

WING ELEVATION
(Front Face Reinf.)

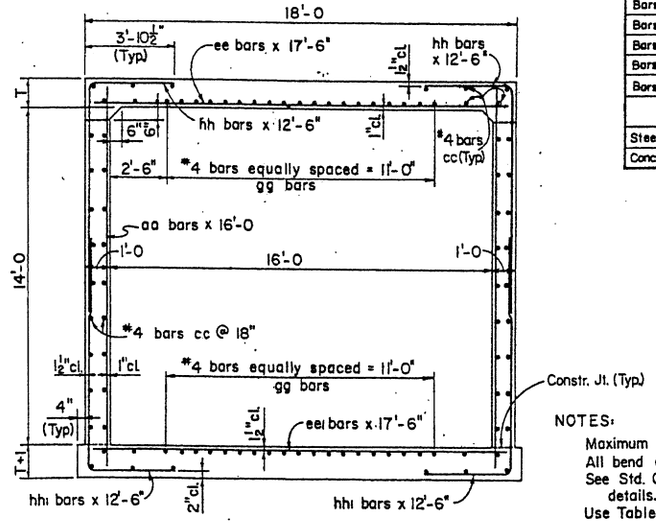

SECTION A-A

NOTES:

Maximum Fill 5 Ft. Table I to 20 Ft. Table IV
All bend dimensions are out to out of bar.
See Std. CM-1 for general notes and miscellaneous details.
Use Table No. I next to headwall.

NO.	DATE	DESCRIPTION OF REVISIONS	MADE BY	DATE
1	2-73	Wing thickness & curb height	JTW	7-76
2	2-73			
3	3-73			

DESIGN		
DRAWN	DMY	RDS
CHECKED	RAB	

DESIGN APPROVED: R.C. Buehler

APPROVED FOR DISTRIBUTION: E. J. Scandalis

STATE OF ARIZONA
DEPARTMENT OF TRANSPORTATION
DIVISION OF HIGHWAYS
STANDARD DRAWINGS

16' x 14' EQUIPMENT PASS

REVISION 7-76

STANDARD NO. CEP-1

DRAWING NO. B-3.01

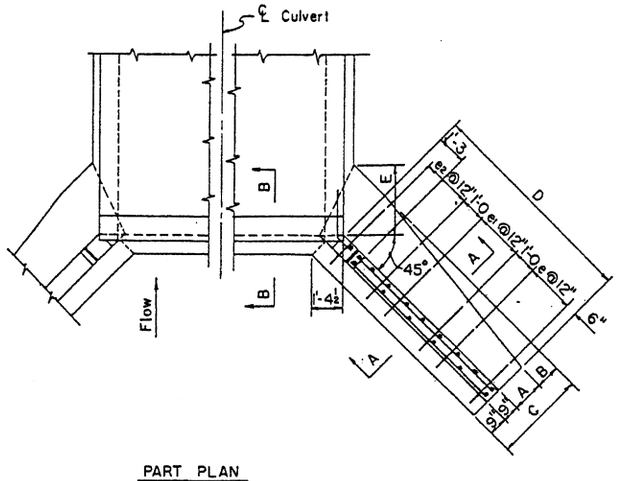

PART PLAN

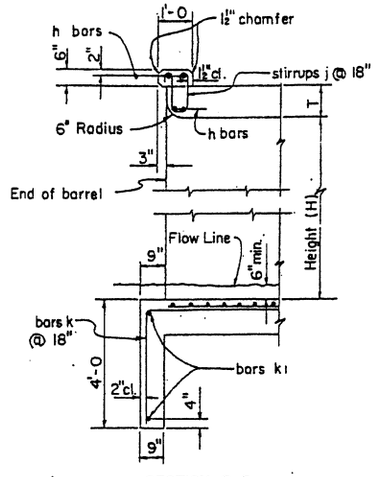

SECTION B-B

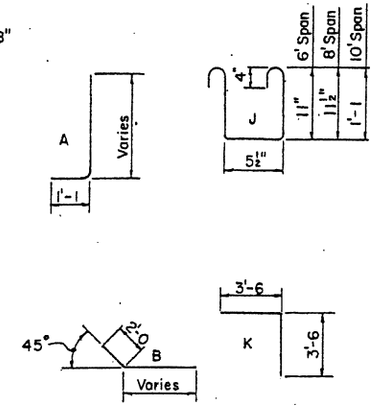

BENDS

INLET WING STEEL LIST

Mark	Bend	3' Height			4' Height			5' Height			6' Height			7' Height		
		No.	Size	Lgth.	No.	Size	Lgth.	No.	Size	Lgth.	No.	Size	Lgth.	No.	Size	Lgth.
a	A	4	#5	4'-0	4	#5	4'-6	4	#5	5'-3	4	#5	6'-0	6	#5	6'-9
a1	✓	4	✓	4'-9	4	✓	5'-6	4	✓	6'-3	4	✓	6'-9	4	✓	7'-9
a2	✓	4	✓	5'-6	2	✓	6'-3	4	✓	7'-0	6	✓	7'-6	6	✓	8'-6
a3	✓				4	✓	6'-6	4	✓	7'-9	4	✓	8'-6	4	✓	9'-6
a4	str.	4	#4	3'-0	4	#4	3'-6	4	#4	4'-3	4	#4	5'-0	4	#4	5'-6
a5	✓	4	✓	4'-0	4	✓	4'-9	4	✓	5'-6	4	✓	6'-0	4	✓	6'-9
a6	✓							2	✓	6'-6	4	✓	7'-3	4	✓	7'-9
b	B	6	#4	2'-9	8	#4	2'-9	10	#4	2'-9	10	#4	2'-9	12	#4	2'-9
b1	str.	4	#6	4'-0	4	#6	5'-3	4	#6	6'-3	4	#6	7'-6	4	#6	8'-6
b2	✓	8	#4	4'-0	8	#4	5'-0	12	#4	6'-0	12	#4	7'-0	12	#4	8'-0
b3	✓	4	✓	1'-6	4	✓	3'-6	4	✓	2'-3	4	✓	5'-0	4	✓	7'-0
b4	✓													4	✓	3'-0
e	✓	10	#4	1'-9	8	#4	2'-0	6	#4	2'-0	6	#4	2'-3	6	✓	2'-3
e1	✓				4	✓	2'-3	4	✓	2'-3	6	✓	2'-6	6	✓	2'-9
e2	✓							4	✓	2'-6	4	✓	3'-0	6	✓	3'-3
g	B.	2	#4	7'-3	2	#4	8'-3	2	✓	9'-3	2	✓	10'-0	2	✓	11'-0
m	str.	8	✓	4'-6	8	✓	5'-6	10	✓	6'-6	10	✓	7'-6	10	✓	8'-6

CURB & CUT-OFF WALL STEEL LIST

Mark	Bend	Size	6' Spans				8' Spans				10' Spans			
			1 Barrel		○	◇	1 Barrel		○	◇	1 Barrel		○	◇
			No.	Lgth.	No.	Lgth.	No.	Lgth.	No.	Lgth.	No.	Lgth.	No.	Lgth.
h	str.	#6	4	7'-0		6'-8	4	9'-3		8'-9	4	11'-3		10'-10
j	J	#4	5	3'-6	4		6	3'-6	6		8	3'-9	7	
k	K	✓	4	7'-0	4		5	7'-0	6		6	7'-0	7	
k1	str.	✓	2	4'-9		6'-8	2	6'-9		8'-9	2	8'-9		10'-10

○ Additional number of bars per each extra barrel.
◇ Additional length of bars per each extra barrel.

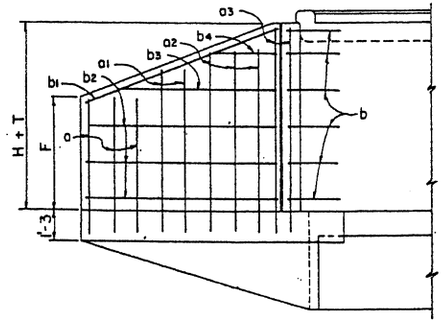

WING ELEVATION
(Back Face Reinf.)

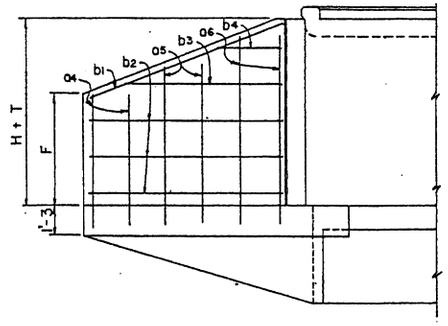

WING ELEVATION
(Front Face Reinf.)

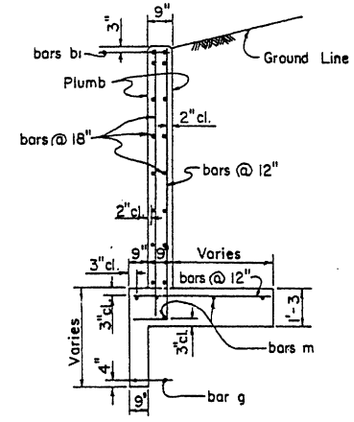

SECTION A-A

DIMENSIONS

Height of Opening	A	B	C	D	E	F
3'	9"	0	2'-3	5'-0	9"	2'-1
4'	11"	4"	2'-9	6'-0	1'-5	2'-8
5'	1'-1	8"	3'-3	7'-0	2'-2	3'-5
6'	1'-2	1'-1	3'-9	8'-0	2'-10	4'-0
7'	1'-3	1'-6	4'-3	9'-0	3'-7	4'-8

NOTE:
See Std. CM-1 for general notes and miscellaneous details.
See Std. CWQ-1 for concrete and steel headwall quantities.

DESIGN	DWY	7-72	NO.	DESCRIPTION OF REVISIONS	MADE BY	DATE
DRAWN	APV	7-72	1	Curb height max 6"	J.T.W.	7-76
CHECKED	NAB	3-73	2			
			3			

DESIGN APPROVED	STATE OF ARIZONA DEPARTMENT OF TRANSPORTATION DIVISION OF HIGHWAYS STANDARD DRAWINGS	REVISION 7-76
APPROVED FOR DISTRIBUTION	INLET WINGS RIGHT ANGLE CULVERT 2:1 SLOPE, HEIGHT 3' TO 7'	STANDARD NO. CW2-1 DRAWING NO. B-4.01

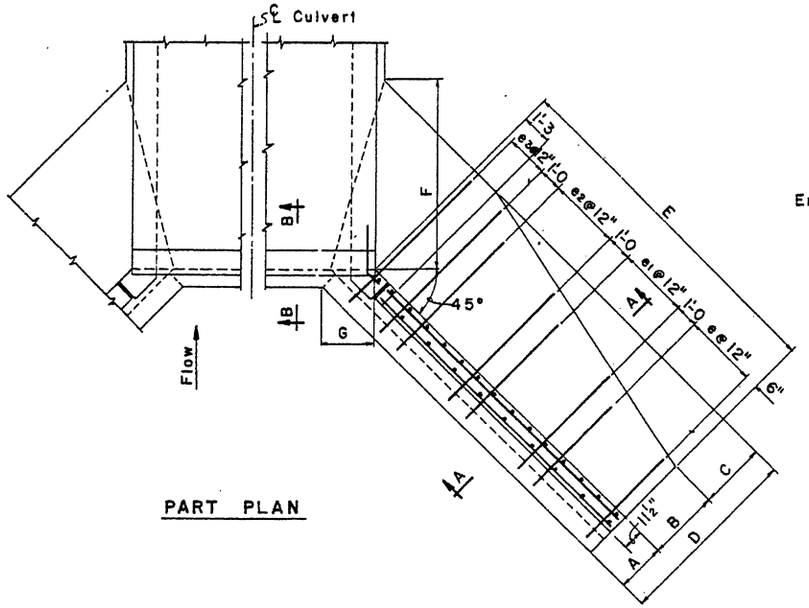

PART PLAN

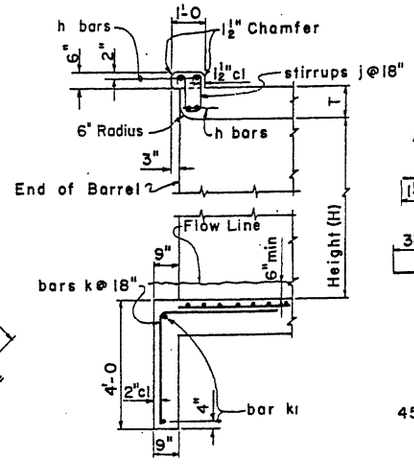

SECTION B-B

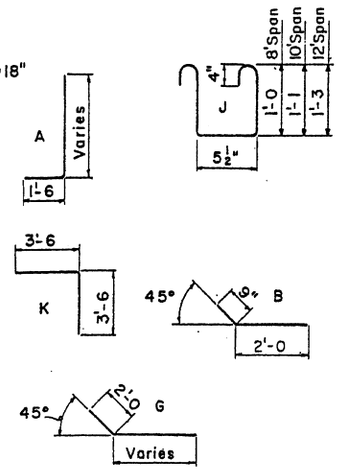

BENDS

INLET WINGS STEEL LIST

Mark	Bend	8' Height			9' Height			10' Height			11' Height			12' Height		
		No	Size	Lgth	No	Size	Lgth	No	Size	Lgth	No	Size	Lgth	No	Size	Lgth
a	A	2	#6	11'-3	2	#6	12'-3	2	#7	13'-3	2	#7	14'-3	2	#7	15'-3
a1	✓	6	#5	8'-0	6	#5	8'-9	6	#5	9'-3	6	#5	9'-9	6	#5	10'-3
a2	✓	6	✓	9'-3	6	✓	9'-9	6	✓	10'-6	6	#6	11'-0	6	#6	11'-6
a3	✓	4	✓	10'-6	6	#6	11'-0	6	#6	11'-9	6	#7	12'-0	6	#7	12'-9
a4	✓	2	#6	11'-3	2	✓	12'-3	4	#7	13'-0	6	✓	13'-3	6	✓	13'-9
a5	✓										2	✓	14'-3	4	✓	15'-0
a6	✓										6	#5	6'-6	12	#6	6'-9
a7	str	6	#4	6'-6	6	#4	7'-0	6	#4	7'-9	6	#4	8'-3	6	#4	8'-9
a8	✓	6	✓	8'-3	6	✓	9'-0	6	✓	9'-6	6	✓	10'-0	6	✓	10'-6
a9	✓				2	✓	10'-9	4	✓	11'-3	6	✓	11'-9	6	✓	12'-3
b	B	12	#4	2'-9	14	✓	2'-9	14	✓	2'-9	16	✓	2'-9	18	✓	2'-9
b1	str	4	#6	9'-6	4	#6	10'-6	4	#6	11'-6	4	#6	13'-3	4	#6	14'-3
b2	✓	16	#4	8'-9	16	#4	9'-9	20	#4	10'-9	20	#4	12'-3	20	#4	13'-3
b3	✓	4	✓	5'-0	4	✓	6'-6	4	✓	7'-3	4	✓	9'-3	4	✓	11'-3
b4	✓	4	✓	1'-3	4	✓	2'-9	4	✓	3'-6	4	✓	5'-6	4	✓	7'-6
b5	✓										4	✓	1'-6	4	✓	3'-9
e	✓	6	#4	3'-0	6	#4	3'-0	6	#4	3'-3	8	#4	3'-6	8	#4	3'-9
e1	✓	6	✓	3'-6	6	✓	3'-6	6	✓	4'-0	8	✓	4'-3	8	#5	4'-6
e2	✓	4	✓	3'-9	6	✓	4'-0	6	#5	4'-6	6	#5	5'-0	8	#6	5'-3
e3	✓	4	✓	4'-3	4	#5	4'-9	6	✓	5'-0	6	#6	5'-6	6	#7	6'-3
g	G	2	✓	12'-9	2	#4	14'-0	2	#4	15'-0	2	#4	16'-6	2	#4	17'-9
m	str	10	✓	9'-6	10	✓	10'-6	10	✓	11'-6	12	✓	13'-0	12	✓	14'-0

DIMENSIONS

Height of Opening	A	B	C	D	E	F	G	J
8'	2'-0	1'-4	1'-5	4'-9	10'-0	3'-7	2'-1	5'-4
9'	2'-1	1'-6	1'-8	5'-3	11'-0	4'-2	2'-2⅜	5'-11
10'	2'-2	1'-8	1'-11	5'-9	12'-0	4'-9	2'-3¾	6'-7
11'	2'-3	1'-10	2'-2	6'-3	13'-6	5'-4	2'-5⅛	7'-1
12'	2'-4	2'-0	2'-5	6'-9	14'-6	5'-11	2'-6⅝	7'-8

CURB & CUT-OFF WALL STEEL LIST

Mark	Bend	Size	8' Spans				10' Spans				12' Spans			
			1 Barrel		○	◇	1 Barrel		○	◇	1 Barrel		○	◇
			No	Lgth	No	Lgth	No	Lgth	No	Lgth	No	Lgth	No	Lgth
h	str	#6	4	9'-3		8'-9	4	11'-3		10'-10	4	13'-6		13'-0
j	J	#4	6	3'-6	6		8	3'-9	7		9	4'-3	8	
k	K	✓	5	7'-0	6		5	7'-0	7		7	7'-0	8	
k1	str	✓	2	5'-3		8'-9	2	7'-0		10'-10	2	9'-0		13'-0

○ Additional number of bars per each extra barrel.
◇ Additional length of bars per each extra barrel.

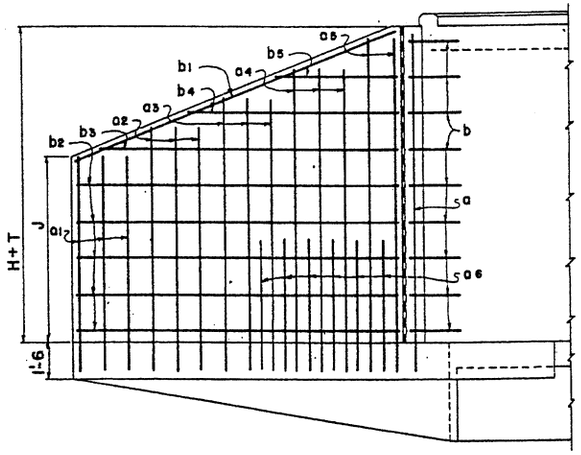

WING ELEVATION
(Back Face Reinf.)

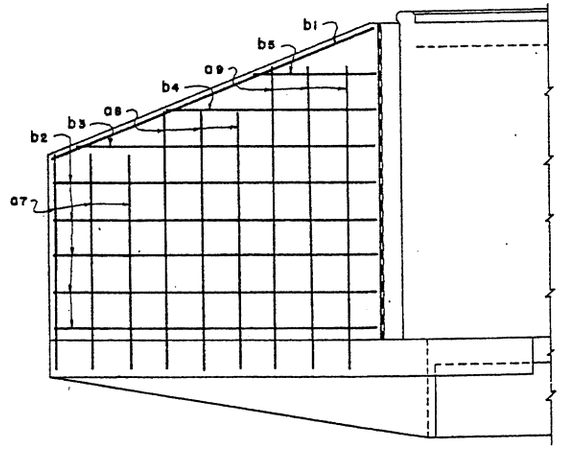

WING ELEVATION
(Front Face Reinf.)

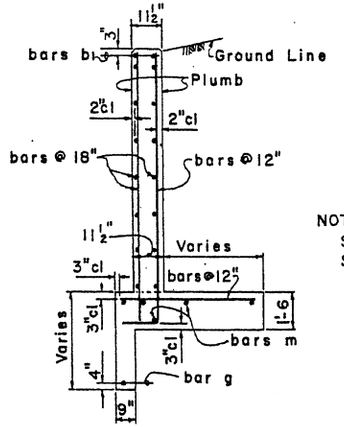

SECTION A-A

NOTE:
See Std. CM-1 for general notes and miscellaneous details.
See Std. CWQ-1 for concrete and steel headwall quantities.

NO.	DESCRIPTION OF REVISIONS	MADE BY	DATE
1	Stirrups - 12' Span.	SEA	10-74
2	Wing thickness & curb height.	JTW	7-76
3			

DESIGN	GBW, DHT	8-72
DRAWN	RWM, APJ	8-72
CHECKED	WT, HAB	3-73

DESIGN APPROVED R.C. Brechler
APPROVED FOR DISTRIBUTION F. R. Hendrickson

STATE OF ARIZONA
DEPARTMENT OF TRANSPORTATION
DIVISION OF HIGHWAYS
STANDARD DRAWINGS

INLET WINGS
RIGHT ANGLE CULVERT
2:1 SLOPE, HEIGHT 8' TO 12'

REVISION 7-76
STANDARD NO. CW2-2
DRAWING NO. B-4.02

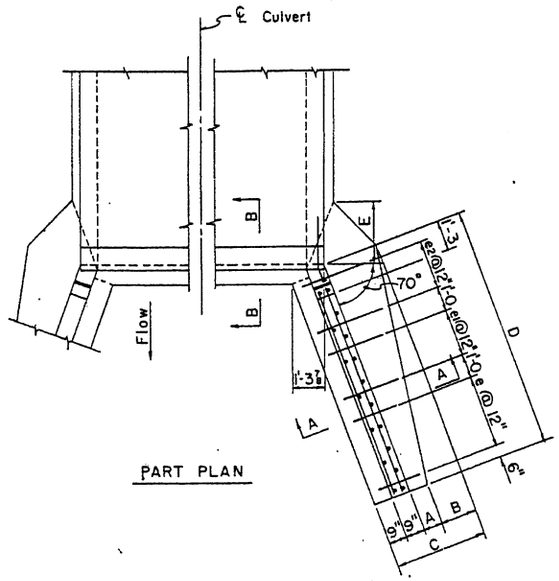

PART PLAN

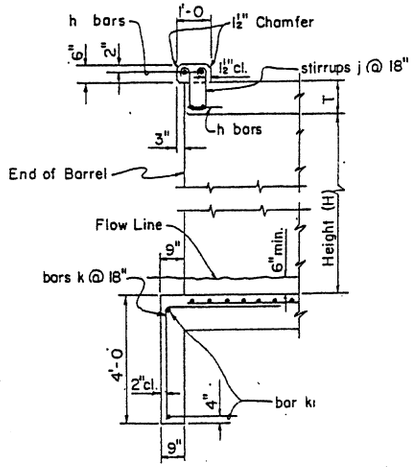

SECTION B-B

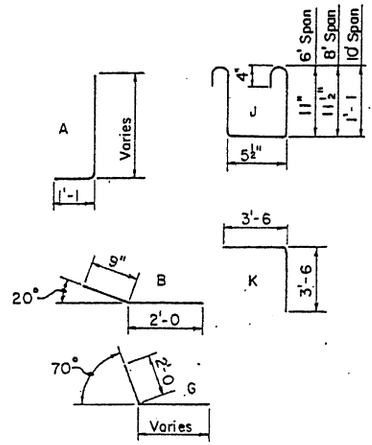

BENDS

OUTLET WINGS STEEL LIST

Mark	Bend	3' Height			4' Height			5' Height			6' Height			7' Height		
		No.	Size	Lgth.	No.	Size	Lgth.	No.	Size	Lgth.	No.	Size	Lgth.	No.	Size	Lgth.
a	A	4	#5	3'-6	4	#5	4'-0	4	#5	4'-6	6	#5	4'-9	6	#5	5'-0
a1	✓	4	✓	4'-9	4	✓	5'-0	4	✓	5'-6	4	✓	6'-6	6	✓	6'-6
a2	✓	4	✓	5'-9	2	✓	6'-3	4	✓	6'-9	4	✓	7'-6	6	✓	8'-3
a3	✓				4	✓	6'-9	4	✓	7'-9	4	✓	8'-6	4	✓	9'-6
a4	str.	4	#4	2'-6	4	#4	3'-0	4	#4	3'-6	4	#4	3'-9	4	#4	4'-0
a5	✓	4	✓	4'-0	4	✓	4'-6	4	✓	5'-0	4	✓	5'-6	4	✓	5'-6
a6	✓							2	✓	6'-6	4	✓	7'-0	4	✓	7'-0
a7	✓													2	✓	8'-6
b	B	6	#4	2'-9	8	#4	2'-9	10	#4	2'-9	10	#4	2'-9	12	✓	2'-9
b1	str.	4	#6	4'-6	4	#6	5'-9	4	#6	6'-9	4	#6	8'-3	4	#6	10'-0
b2	✓	4	#4	4'-0	8	#4	5'-0	8	#4	6'-0	8	#4	7'-6	8	#4	9'-0
b3	✓	4	✓	3'-3	4	✓	2'-6	4	✓	4'-6	4	✓	6'-3	4	✓	8'-0
b4	✓							4	✓	2'-0	4	✓	3'-6	4	✓	5'-3
b5	✓													4	✓	2'-3
e	✓	10	#4	1'-9	6	#4	2'-0	6	#4	2'-0	6	#4	2'-3	8	✓	2'-3
e1	✓				6	✓	2'-3	4	✓	2'-3	6	✓	2'-6	6	✓	2'-9
e2	✓							4	✓	2'-6	6	✓	3'-0	6	✓	3'-3
g	G	2	#4	7'-3	2	#4	8'-3	2	✓	9'-0	2	✓	10'-6	2	✓	12'-0
m	str.	8	✓	4'-6	8	✓	5'-6	10	✓	6'-6	10	✓	8'-0	10	✓	9'-6

CURB & CUT-OFF WALL STEEL LIST

Mark	Bend	Size	6' Spans				8' Spans				10' Spans			
			1 Barrel		○	◇	1 Barrel		○	◇	1 Barrel		○	◇
			No.	Lgth.	No.	Lgth.	No.	Lgth.	No.	Lgth.	No.	Lgth.	No.	Lgth.
h	str.	#6	4	7'-0		6'-8	4	9'-3		8'-9	4	11'-3		10'-10
j	J	#4	5	3'-6	4		6	3'-6	6		8	3'-9	7	
k	K	✓	4	7'-0	4		5	7'-0	6		6	7'-0	7	
k1	str.	✓	2	4'-9		6'-8	2	6'-9		8'-9	2	8'-9		10'-10

○ Additional number of bars per each extra barrel.
◇ Additional length of bars per each extra barrel.

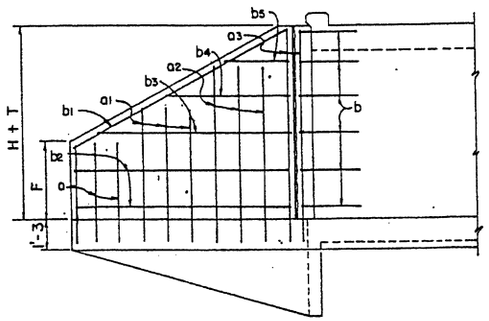

WING ELEVATION
(Back Face Reinf.)

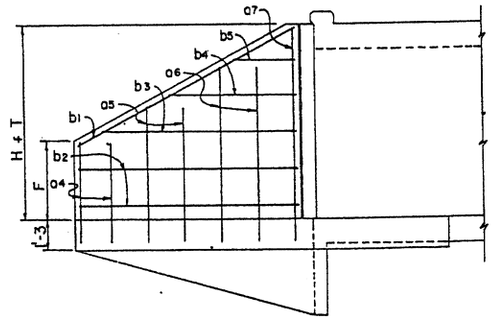

WING ELEVATION
(Front Face Reinf.)

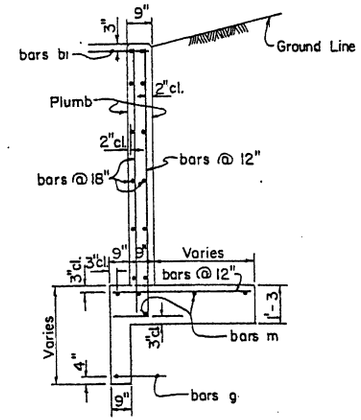

SECTION A-A

DIMENSIONS

Height of Opening	A	B	C	D	E	F
3'	9"	0	2'-3	5'-0	8"	1'-6
4'	11"	4"	2'-9	6'-0	1'-3	2'-0
5'	1'-1	8"	3'-3	7'-0	1'-11	2'-7
6'	1'-2	1'-1	3'-9	8'-6	2'-7	2'-10
7'	1'-3	1'-6	4'-3	10'-0	3'-2	3'-2

NOTE:
See Std. CM-1 for general notes and micellaneous details.
See Std. CWQ-1 for concrete and steel headwall quantities.

DESIGN	DHY	7-72	NO.	DESCRIPTION OF REVISIONS	MADE BY	DATE
DRAWN	APJ	8-72	①	Curb height new 6"	JTW	7-76
CHECKED	MAB	3-73	②			
			③			

DESIGN APPROVED: RC Bressler
APPROVED FOR DISTRIBUTION: E J Denslow

STATE OF ARIZONA
DEPARTMENT OF TRANSPORTATION
DIVISION OF HIGHWAYS
STANDARD DRAWINGS

OUTLET WINGS
RIGHT ANGLE CULVERT
2:1 SLOPE, HEIGHT 3' TO 7'

REVISION 7-76
STANDARD NO. CW2-3
DRAWING NO. B-4.03

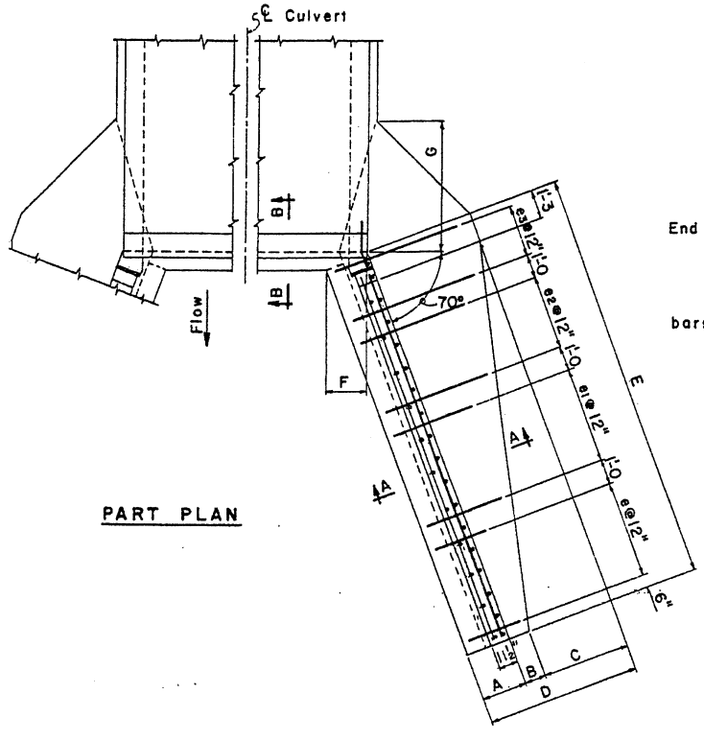

PART PLAN

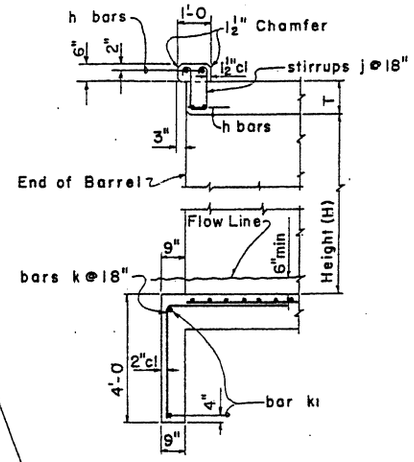

SECTION B-B

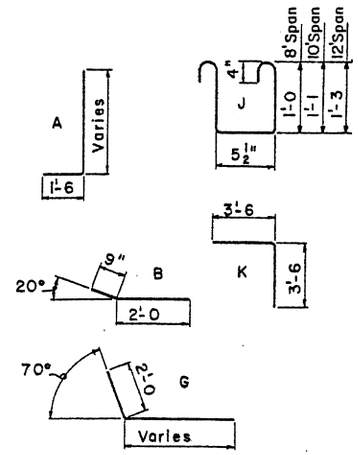

BENDS

OUTLET WINGS STEEL LIST

Mark	Bend	8' Height			9' Height			10' Height			11' Height			12' Height		
		No	Size	Lgth	No	Size	Lgth	No	Size	Lgth	No	Size	Lgth	No	Size	Lgth
a	A	2	#6	11'-3	2	#6	12'-3	2	#7	13'-3	2	#7	14'-3	2	#7	15'-3
a1	✓	6	#5	6'-0	6	#5	6'-6	6	#5	6'-9	6	#5	7'-3	6	#5	7'-6
a2	✓	6	✓	7'-9	6	✓	8'-0	6	✓	8'-3	6	✓	9'-0	6	✓	9'-0
a3	✓	6	✓	9'-3	6	✓	9'-6	6	✓	9'-9	6	#6	10'-3	6	#6	10'-6
a4	✓	4	#6	10'-9	4	#6	11'-3	6	#6	11'-3	6	#7	11'-9	6	#7	12'-0
a5	✓				2	✓	12'-3	4	#7	13'-0	4	✓	13'-3	6	✓	13'-6
a6	✓										2	✓	14'-3	4	✓	15'-0
a7	✓										6	#5	6'-9	10	#6	7'-3
a8	str	6	#4	4'-9	6	#4	5'-0	6	#4	5'-3	6	#4	5'-6	6	#4	6'-0
a9	✓	6	✓	7'-0	6	✓	7'-3	6	✓	7'-6	6	✓	7'-9	6	✓	8'-3
a10	✓	2	✓	9'-6	4	✓	9'-9	6	✓	9'-9	6	✓	10'-3	6	✓	10'-9
a11	✓										2	✓	12'-6	4	✓	13'-0
b	B	12	#4	2'-9	14	#4	2'-9	16	#4	2'-9	16	✓	2'-9	18	✓	2'-9
b1	str	4	#6	11'-6	4	#6	13'-3	4	#6	15'-0	4	#6	16'-6	4	#6	17'-9
b2	✓	8	#4	10'-3	12	#4	11'-9	12	#4	13'-3	12	#4	14'-9	12	#4	15'-9
b3	✓	4	✓	9'-6	4	✓	9'-3	4	✓	10'-9	4	✓	13'-0	4	✓	14'-9
b4	✓	4	✓	6'-9	4	✓	6'-3	4	✓	7'-9	4	✓	10'-0	4	✓	11'-9
b5	✓	4	✓	4'-0	4	✓	3'-6	4	✓	5'-0	4	✓	7'-0	4	✓	9'-0
b6	✓							4	✓	2'-0	4	✓	4'-0	4	✓	6'-0
b7	✓													4	✓	3'-0
e	✓	6	#4	2'-9	8	#4	2'-9	8	#4	2'-9	10	#4	3'-0	10	✓	3'-0
e1	✓	6	✓	3'-0	6	✓	3'-6	8	✓	3'-6	8	#5	3'-9	10	#5	4'-0
e2	✓	6	✓	3'-6	6	✓	4'-0	8	#5	4'-3	8	#6	4'-9	8	#6	5'-0
e3	✓	6	✓	4'-0	6	#5	4'-6	6	#6	5'-0	6	✓	5'-6	6	#7	6'-0
g	G	2	✓	13'-6	2	#4	15'-0	2	#4	16'-3	2	#4	17'-9	2	#4	18'-9
m	str	10	✓	11'-0	10	✓	12'-6	12	✓	14'-0	12	✓	15'-6	12	✓	16'-6

DIMENSIONS

Height of Opening	A	B	C	D	E	F	G	J
8'	2'-0	1'-2	1'-7	4'-9	11'-6	1'-10¼	3'-2	3'-5
9'	2'-1	1'-2	2'-0	5'-3	13'-0	1'-11¼	3'-9	3'-9
10'	2'-2	1'-2	2'-5	5'-9	14'-6	2'-0⅜	4'-3	4'-0
11'	2'-3	1'-2	2'-10	6'-3	16'-0	2'-1½	4'-10	4'-4
12'	2'-4	1'-2	3'-3	6'-9	17'-0	2'-2½	5'-4	4'-10

CURB & CUT-OFF WALL STEEL LIST

Mark	Bend	Size	8' Spans				10' Spans				12' Spans			
			1 Barrel		○	◇	1 Barrel		○	◇	1 Barrel		○	◇
			No	Lgth	No	Lgth	No	Lgth	No	Lgth	No	Lgth	No	Lgth
h	str	#6	4	9'-3		8'-9	4	11'-3		10'-10	4	13'-6		13'-0
j	J	#4	6	3'-6	6		8	3'-9	7		9	4'-3	8	
k	K	✓	4	7'-0	6		6	7'-0	7		7	7'-0	8	
k1	str	✓	2	5'-9		8'-9	2	7'-6		10'-10	2	9'-6		13'-0

○ Additional number of bars per each extra barrel.
◇ Additional length of bars per each extra barrel.

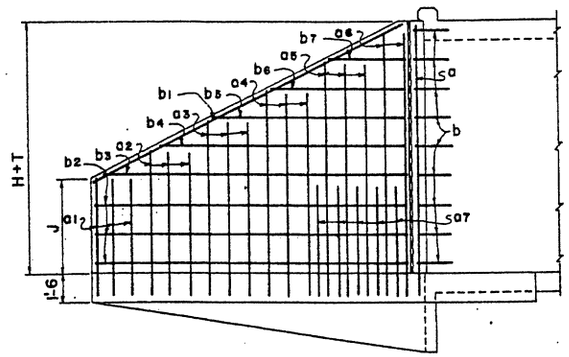

WING ELEVATION
(Back Face Reinf.)

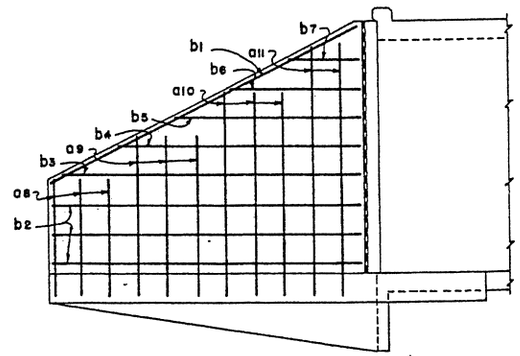

WING ELEVATION
(Front Face Reinf.)

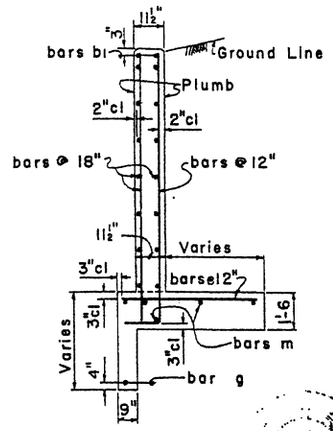

SECTION A-A

NOTE:
See Std. CM-1 for general notes and miscellaneous details.
See Std. CWQ-1 for concrete and steel headwall quantities.

DESIGN							
DESIGN							
DRAWN	RWH, JRJ	8-72	8-72	3-73			
CHECKED	WT, NAB	3-73					

NO.	DESCRIPTION OF REVISIONS	MADE BY	DATE
1	Stirrups - 12' Span	SEA	10-7
2	Wing thickness & curb height	JTW	7-76
3			

DESIGN APPROVED: R.C. Buchler

APPROVED FOR DISTRIBUTION: [signature]

STATE OF ARIZONA
DEPARTMENT OF TRANSPORTATION
DIVISION OF HIGHWAYS
STANDARD DRAWINGS

OUTLET WINGS
RIGHT ANGLE CULVERT
2:1 SLOPE, HEIGHT 8' TO 12'

REVISED 7-76

STANDARD NO. CW2-4

DRAWING NO. B-4.04

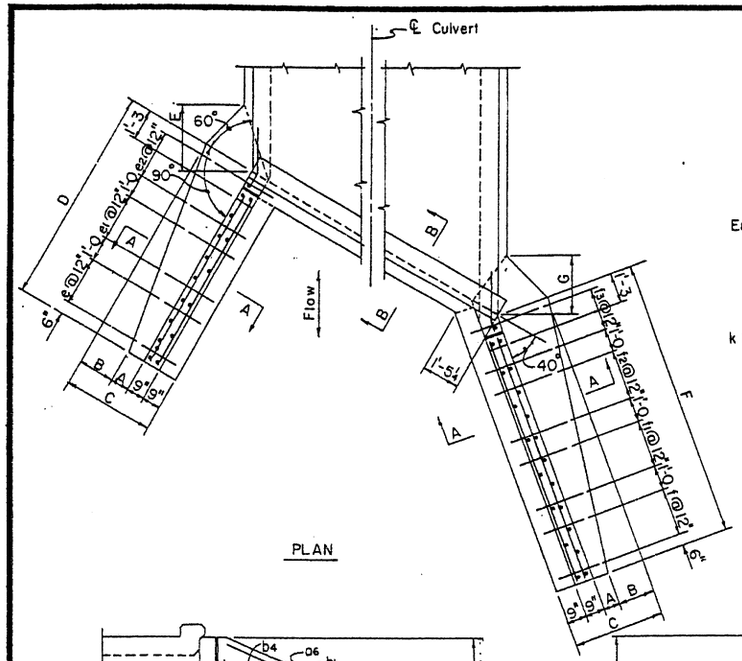

PLAN

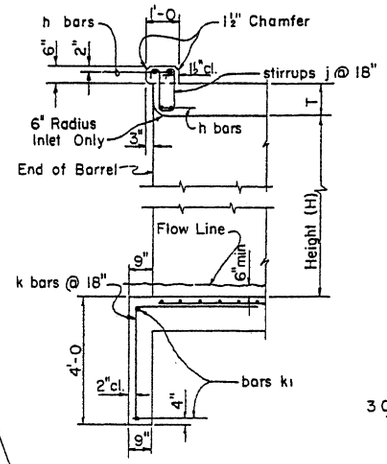

SECTION B-B

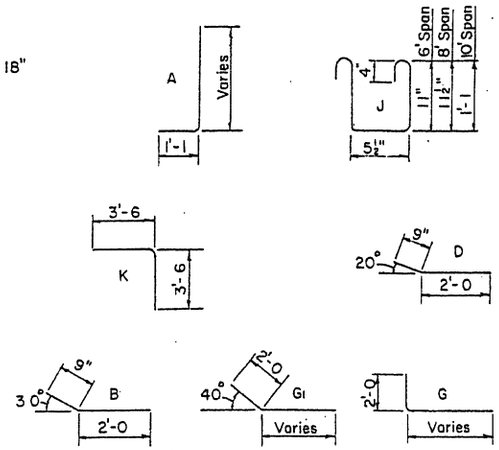

BENDS

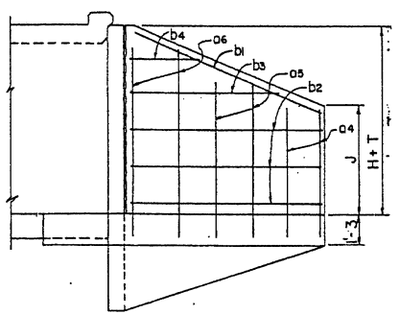

SHORT WING ELEVATION
(Front Face Reinf.)

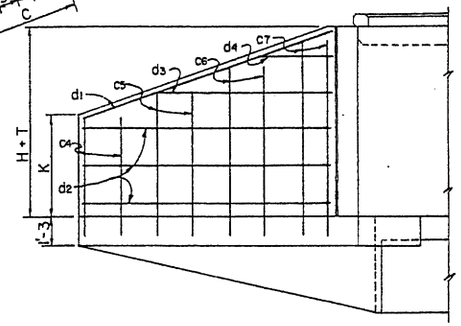

LONG WING ELEVATION
(Front Face Reinf.)

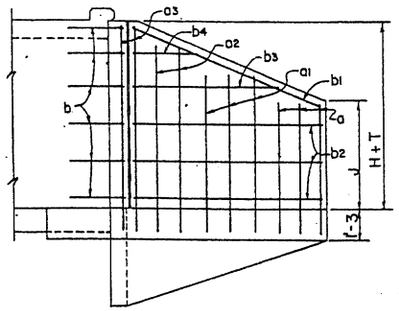

SHORT WING ELEVATION
(Back Face Reinf.)

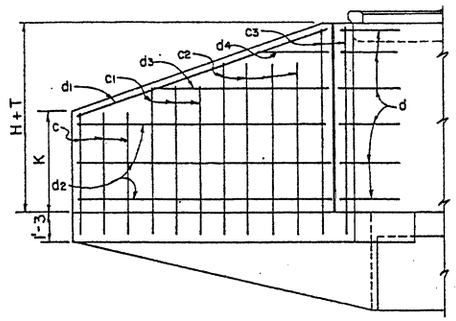

LONG WING ELEVATION
(Back Face Reinf.)

DIMENSIONS

Height of Opening	A	B	C	D	E	F	G	J	K
3'	9"	0	2'-3	5'-0	8"	7'-0	8"	1'-4	1'-7
4'	11"	4"	2'-9	6'-0	1'-5	8'-0	1'-3	1'-10	2'-3
5'	1'-1	8"	3'-3	7'-0	2'-1	9'-0	1'-11	2'-4	2'-11
6'	1'-2	1'-1	3'-9	8'-0	2'-9	10'-0	2'-7	2'-10	3'-7
7'	1'-3	1'-6	4'-3	9'-0	3'-5	11'-6	3'-2	3'-4	4'-2

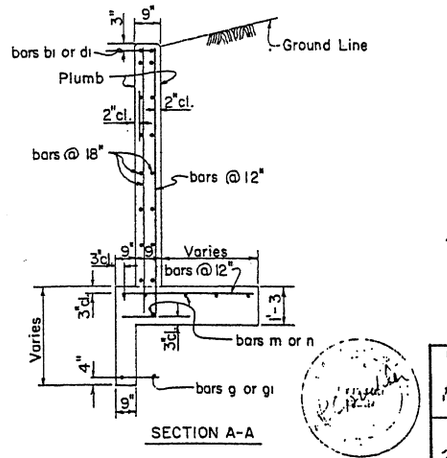

SECTION A-A

INLET OR OUTLET WINGS STEEL LIST

Mark	Bend	3' Height			4' Height			5' Height			6' Height			7' Height		
		No.	Size	Lgth.	No.	Size	Lgth.	No.	Size	Lgth.	No.	Size	Lgth.	No.	Size	Lgth.
SHORT WING																
a	A	2	#5	3'-3	2	#5	3'-9	2	#5	4'-3	3	#5	4'-9	3	#5	5'-3
a1	✓	2	✓	4'-6	2	✓	5'-0	2	✓	5'-6	2	✓	6'-6	3	✓	7'-0
a2	✓	2	✓	5'-9	1	✓	6'-3	2	✓	6'-6	2	✓	7'-6	2	✓	8'-9
a3	✓				2	✓	6'-9	2	✓	7'-6	2	✓	8'-9	2	#6	9'-9
a4	str.	1	#4	2'-3	2	#4	2'-9	2	#4	3'-3	2	#4	3'-9	2	#4	4'-3
a5	✓	1	✓	3'-3	1	✓	4'-6	2	✓	5'-0	2	✓	5'-6	2	✓	6'-0
a6	✓	2	✓	4'-3	1	✓	5'-6	1	✓	6'-6	2	✓	7'-3	2	✓	7'-9
b	B	3	✓	2'-9	4	✓	2'-9	5	✓	2'-9	5	✓	2'-9	6	✓	2'-9
b1	str.	2	#6	4'-6	2	#6	5'-9	2	#6	7'-0	2	#6	8'-0	2	#6	9'-0
b2	✓	2	#4	4'-0	4	#4	5'-0	4	#4	6'-0	4	#4	7'-0	6	#4	8'-0
b3	✓	2	✓	3'-0	2	✓	2'-6	2	✓	4'-6	2	✓	6'-0	2	✓	5'-9
b4	✓							2	✓	2'-0	2	✓	3'-6	2	✓	3'-0
e	✓	5	#4	1'-9	2	#4	1'-9	3	✓	2'-0	3	✓	2'-3	3	✓	2'-3
e1	✓				2	✓	2'-0	2	✓	2'-3	3	✓	2'-6	3	✓	2'-9
e2	✓				2	✓	2'-3	2	✓	2'-6	2	✓	3'-0	3	✓	3'-3
g	G	1	#4	7'-6	1	✓	8'-3	1	✓	9'-6	1	✓	10'-3	1	✓	11'-3
m	str.	4	✓	4'-6	4	✓	5'-6	5	✓	6'-6	5	✓	7'-6	5	✓	8'-6
LONG WING																
c	A	2	#5	3'-6	2	#5	4'-0	3	#5	4'-9	3	#5	5'-6	3	#5	6'-0
c1	✓	2	✓	4'-3	2	✓	5'-0	3	✓	6'-0	3	✓	6'-6	3	✓	7'-0
c2	✓	2	✓	5'-0	3	✓	5'-9	2	✓	7'-0	3	✓	7'-9	4	✓	8'-0
c3	✓	2	✓	5'-9	2	✓	6'-9	2	✓	7'-9	2	✓	8'-9	2	#6	9'-6
c4	str.	2	#4	2'-6	2	#4	3'-0	2	#4	3'-9	2	#4	4'-6	2	#4	5'-0
c5	✓	2	✓	3'-6	2	✓	4'-3	2	✓	5'-0	2	✓	5'-6	2	✓	6'-0
c6	✓	1	✓	4'-6	2	✓	5'-6	2	✓	6'-0	2	✓	6'-9	2	✓	7'-0
c7	✓										1	✓	7'-6	2	✓	8'-3
d	D	3	#4	2'-9	4	#4	2'-9	5	#4	2'-9	5	✓	2'-9	6	✓	2'-9
d1	str.	2	#6	6'-3	2	#6	7'-3	2	#6	8'-6	2	#6	9'-6	2	#6	11'-0
d2	✓	2	#4	6'-0	4	#4	7'-0	4	#4	8'-0	6	#4	9'-0	6	#4	10'-6
d3	✓	2	✓	5'-0	2	✓	3'-9	2	✓	7'-0	2	✓	5'-9	2	✓	8'-6
d4	✓							2	✓	3'-0				2	✓	4'-6
f	✓	7	#4	1'-9	3	#4	1'-9	3	#4	2'-0	3	#4	2'-0	3	✓	2'-3
f1	✓				5	✓	2'-0	3	✓	2'-3	3	✓	2'-6	3	✓	2'-6
f2	✓							3	✓	2'-6	2	✓	2'-9	3	✓	3'-0
f3	✓										2	✓	3'-0	3	✓	3'-6
g1	G1	1	#4	9'-6	1	#4	10'-6	1	#4	11'-6	1	✓	12'-3	1	✓	13'-6
n	str.	4	✓	6'-6	4	✓	7'-6	5	✓	8'-6	5	✓	9'-6	5	✓	11'-0

CURB & CUT-OFF WALL STEEL LIST

Mark	Bend	6' Spans					8' Spans					10' Spans				
		1 Barrel			○	◇	1 Barrel			○	◇	1 Barrel			○	◇
		No.	Size	Lgth.	No.	Lgth.	No.	Size	Lgth.	No.	Lgth.	No.	Size	Lgth.	No.	Lgth.
h	str.	4	#6	8'-0		7'-9	4	#6	10'-6		10'-1	4	#6	13'-0		12'-6
j	J	6	#4	3'-6	5		7	#4	3'-6	7		9	#4	3'-9	8	
k	K	4	✓	7'-0	5		6	✓	7'-0	6		8	✓	7'-0	8	
k1	str.	2	✓	5'-9		7'-9	2	✓	8'-0		10'-1	2	✓	10'-6		12'-6

○ Additional number of bars per each extra barrel.
◇ Additional length of bars per each extra barrel.

NOTE:
See Std. CM-1 for general notes and miscellaneous details.
See Std. CWQ-1 for concrete and steel headwall quantities.

NO.	DESCRIPTION OF REVISIONS	DATE
1	Curb height now 6"	7-76
2		
3		

MADE BY JTW

DESIGN		7-72
DRAWN	APJ	8-72
CHECKED	NAB	3-73

DESIGN APPROVED: K C Zuechler

APPROVED FOR DISTRIBUTION: E Stradling

STATE OF ARIZONA
DEPARTMENT OF TRANSPORTATION
DIVISION OF HIGHWAYS
STANDARD DRAWINGS

REVISION 7-76

INLET OR OUTLET WINGS
30° SKEW CULVERT
2:1 SLOPE, HEIGHT 3' TO 7'

STANDARD NO. CW2-5
DRAWING NO. B-4.05

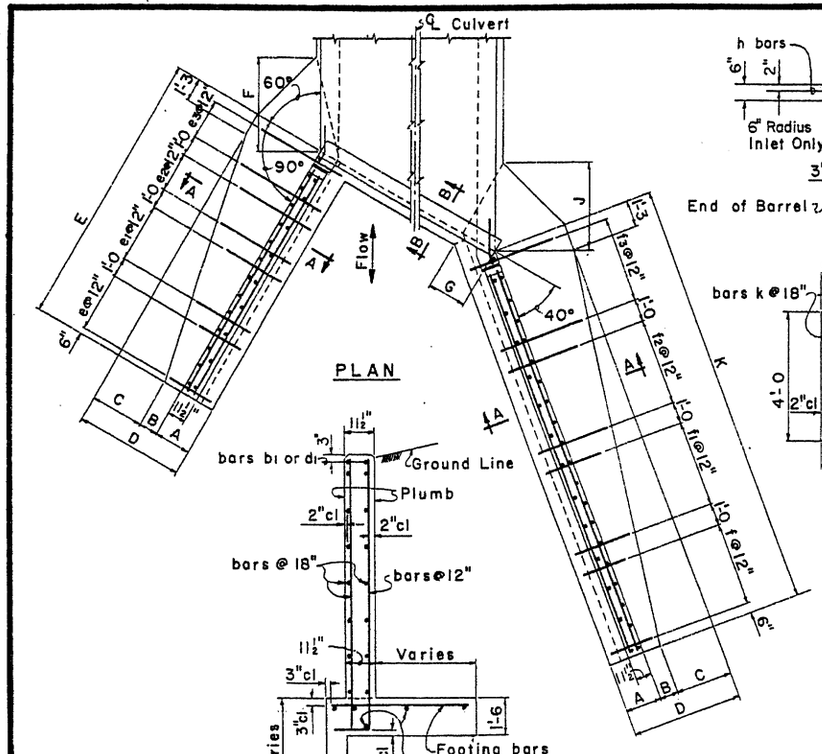

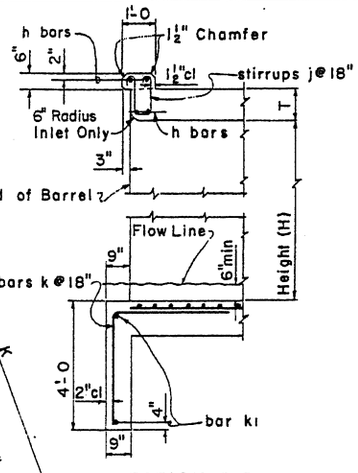

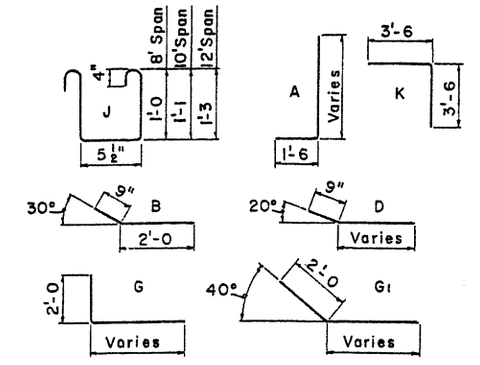

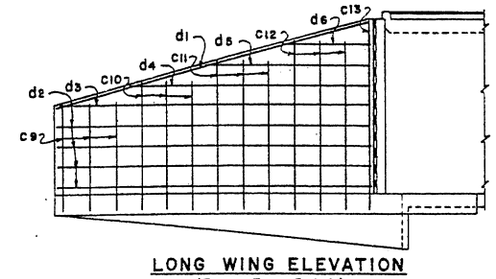

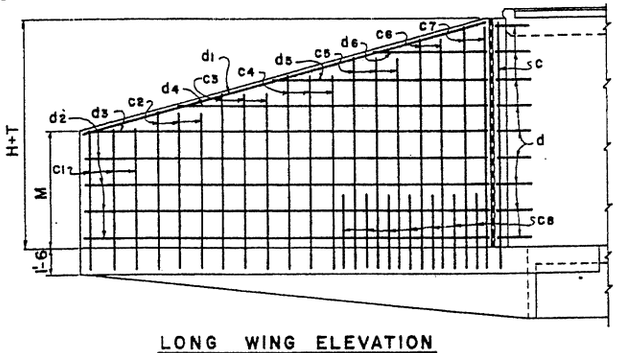

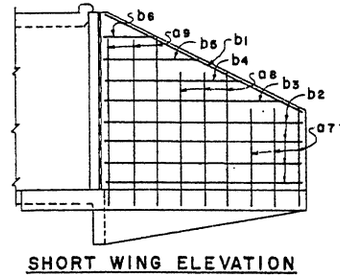

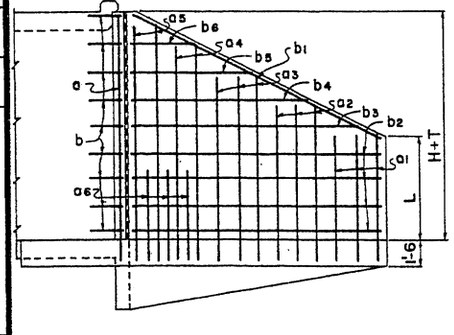

INLET OR OUTLET WINGS STEEL LIST

Mark	Bend	8' Height			9' Height			10' Height			11' Height			12' Height		
		No	Size	Lgth	No	Size	Lgth	No	Size	Lgth	No	Size	Lgth	No	Size	Lgth
SHORT WING																
a	A	1	#5	11'-3	1	#6	12'-3	1	#7	13'-3	1	#7	14'-3	1	#7	15'-3
a1	✓	3	✓	6'-9	3	#5	7'-3	3	#5	7'-9	3	#5	8'-3	3	#5	8'-6
a2	✓	3	✓	8'-6	3	✓	9'-0	3	✓	9'-6	3	✓	9'-9	3	✓	10'-3
a3	✓	2	✓	10'-3	3	#6	10'-6	3	#6	11'-0	3	#6	11'-6	3	#7	11'-9
a4	✓	1	✓	11'-3	1	✓	12'-3	2	#7	12'-9	2	#7	13'-3	2	✓	13'-6
a5	✓										1	✓	14'-3	2	✓	14'-6
a6	✓										2	#5	6'-3	3	#5	6'-9
a7	str	3	#4	5'-0	3	#4	5'-6	3	#4	6'-0	3	#4	6'-6	3	#4	7'-0
a8	✓	2	✓	7'-9	3	✓	8'-3	3	✓	8'-6	3	✓	9'-0	3	✓	9'-6
a9	✓	1	✓	9'-6	1	✓	10'-9	2	✓	11'-0	2	✓	11'-6	3	✓	12'-0
b	B	6	✓	2'-9	7	✓	2'-9	7	✓	2'-9	8	✓	2'-9	9	✓	2'-9
b1	str	2	#6	10'-0	2	#6	11'-3	2	#6	12'-3	2	#6	13'-6	2	#6	14'-6
b2	✓	6	#4	8'-9	6	#4	9'-9	6	#4	10'-9	8	#4	11'-9	8	#4	12'-9
b3	✓	2	✓	6'-3	2	✓	8'-3	2	✓	10'-0	2	✓	9'-0	2	✓	11'-3
b4	✓	2	✓	3'-9	2	✓	5'-6	2	✓	7'-3	2	✓	6'-3	2	✓	8'-3
b5	✓				2	✓	2'-9	2	✓	4'-9	2	✓	3'-9	2	✓	5'-6
b6	✓							2	✓	2'-0				2	✓	3'-0
e	✓	3	#4	3'-0	3	#4	3'-0	3	✓	3'-3	4	#4	3'-3	4	✓	3'-6
e1	✓	3	✓	3'-6	3	✓	3'-9	3	✓	3'-9	3	#5	4'-3	4	#5	4'-6
e2	✓	2	✓	4'-0	3	#5	4'-3	3	#5	4'-3	3	#6	4'-9	3	#6	5'-3
e3	✓	2	✓	4'-6	2	✓	5'-0	3	✓	5'-0	3	#7	5'-6	3	#7	6'-0
g	G	1	✓	11'-9	1	#4	12'-9	1	#4	13'-6	1	#4	14'-6	1	#4	15'-6
m	str	5	✓	9'-6	5	✓	10'-6	5	✓	11'-6	6	✓	12'-6	6	✓	13'-6
LONG WING																
c	A	1	#6	11'-3	1	#7	12'-3	1	#7	13'-3	1	#7	14'-3	1	#7	15'-6
c1	✓	3	#5	7'-3	3	#5	7'-9	3	#5	8'-3	3	#5	8'-6	3	#5	9'-0
c2	✓	3	✓	8'-3	3	✓	8'-9	3	✓	9'-3	3	✓	9'-6	3	✓	10'-0
c3	✓	3	✓	9'-3	3	✓	9'-9	3	✓	10'-3	3	#6	10'-6	3	#6	11'-0
c4	✓	3	✓	10'-3	3	#6	10'-9	3	#6	11'-3	3	#7	11'-6	3	#7	12'-0
c5	✓	1	#6	11'-3	2	#7	12'-0	3	#7	12'-6	3	✓	12'-9	3	✓	13'-0
c6	✓							1	✓	13'-3	3	✓	13'-9	2	✓	14'-3
c7	✓													2	✓	14'-9
c8	✓										3	#5	6'-3	7	#6	6'-9
c9	str	3	#4	5'-9	3	#4	6'-3	3	#4	6'-9	3	#4	7'-0	3	#4	7'-6
c10	✓	3	✓	7'-3	3	✓	7'-9	3	✓	8'-3	3	✓	8'-6	3	✓	9'-0
c11	✓	3	✓	8'-9	3	✓	9'-3	3	✓	9'-9	3	✓	10'-3	3	✓	10'-9
c12	✓				1	✓	10'-9	2	✓	11'-3	3	✓	11'-9	3	✓	12'-3
c13	✓													1	✓	13'-9
d	D	6	#4	2'-9	7	#4	2'-9	7	#4	2'-9	8	#4	2'-9	9	✓	2'-9
d1	str	2	#6	13'-0	2	#6	14'-6	2	#6	16'-3	2	#6	18'-6	2	#6	20'-0
d2	✓	6	#4	12'-3	6	#4	13'-9	8	#4	15'-3	8	#4	17'-3	8	#4	18'-9
d3	✓	2	✓	10'-3	2	✓	13'-0	2	✓	11'-9	2	✓	14'-9	2	✓	17'-9
d4	✓	2	✓	6'-0	2	✓	8'-9	2	✓	7'-6	2	✓	10'-6	2	✓	13'-6
d5	✓				2	✓	4'-6	2	✓	3'-3	2	✓	6'-0	2	✓	8'-9
d6	✓													2	✓	4'-6
f	✓	4	#4	3'-0	4	#4	3'-0	5	#4	3'-3	5	#4	3'-3	5	✓	3'-6
f1	✓	4	✓	3'-6	4	✓	3'-6	4	✓	3'-9	5	✓	4'-0	5	#5	4'-3
f2	✓	3	✓	4'-0	4	#5	4'-3	4	#5	4'-6	5	#5	4'-9	5	#6	5'-0
f3	✓	3	✓	4'-6	3	✓	4'-9	4	✓	5'-0	4	#6	5'-6	5	#7	5'-9
g1	G1	1	✓	16'-6	1	#4	18'-3	1	#4	19-9	1	#4	21'-9	1	#4	23'-3
n	str	5	✓	13'-0	5	✓	14'-6	5	✓	16'-0	6	✓	18'-0	6	✓	19'-6

CURB & CUT-OFF WALL STEEL LIST

Mark	Bend	8' Spans					10' Spans					12' Spans				
		1 Barrel			○	◇	1 Barrel			○	◇	1 Barrel			○	◇
		No	Size	Lgth	No	Lgth	No	Size	Lgth	No	Lgth	No	Size	Lgth	No	Lgth
h	str	4	#6	10'-6		10'-1	4	#6	13'-0		12'-6	4	#7	15'-9		15'-0
j	J	7	#4	3'-6	7		9	#4	3'-9	8		10	#4	4'-3	10	
k	K	5	✓	7'-0	6		7	✓	7'-0	8		8	✓	7'-0	9	
k1	str	2	✓	6'-9		10'-1	2	✓	8'-9		12'-6	2	✓	11'-3		15'-0

○ Additional number of bars per each extra barrel.
◇ Additional length of bars per each extra barrel.

DIMENSIONS

Height of Opening	A	B	C	D	E	F	G	J	K	L	M
8'	2'-0	1'-4	1'-8	5'-0	10'-0	3'-9	2'-2⅝	3'-6	13'-6	3'-10	4'-6
9'	2'-1	1'-5	2'-0	5'-6	11'-0	4'-4	2'-4⅛	4'-1	15'-0	4'-4	5'-0
10'	2'-2	1'-6	2'-1	5'-9	12'-0	4'-7	2'-5¾	4'-3	16'-6	4'-10	5'-6
11'	2'-3	1'-7	2'-5	6'-3	13'-0	5'-2	2'-7¼	4'-10	18'-6	5'-4	5'-11
12'	2'-4	1'-8	2'-9	6'-9	14'-0	5'-8	2'-8⅞	5'-4	20'-0	5'-10	6'-5

NOTE:
See Std CM-1 for general notes and miscellaneous details.
See Std CWQ-1 for concrete and steel headwall quantities.

NO.	DESCRIPTION OF REVISIONS	MADE BY	DATE
1	Stirrups - 12' Span	S.E.A.	10-74
2	Wing thickness & curb height	J.T.W.	7-76

DESIGN	G.B.M., D.H.Y.	8-72
DRAWN	R.W.H., A.P.J.	8-72
CHECKED	W.T., N.A.B.	3-73

DESIGN APPROVED: R.G. Brecher

APPROVED FOR DISTRIBUTION: E. Deleuw

STATE OF ARIZONA
DEPARTMENT OF TRANSPORTATION
DIVISION OF HIGHWAYS
STANDARD DRAWINGS

INLET OR OUTLET WINGS
30° SKEW CULVERT
2:1 SLOPE, HEIGHT 8' TO 12'

REVISION: 7-76
STANDARD NO.: CW2-6
DRAWING NO.: B-4.06

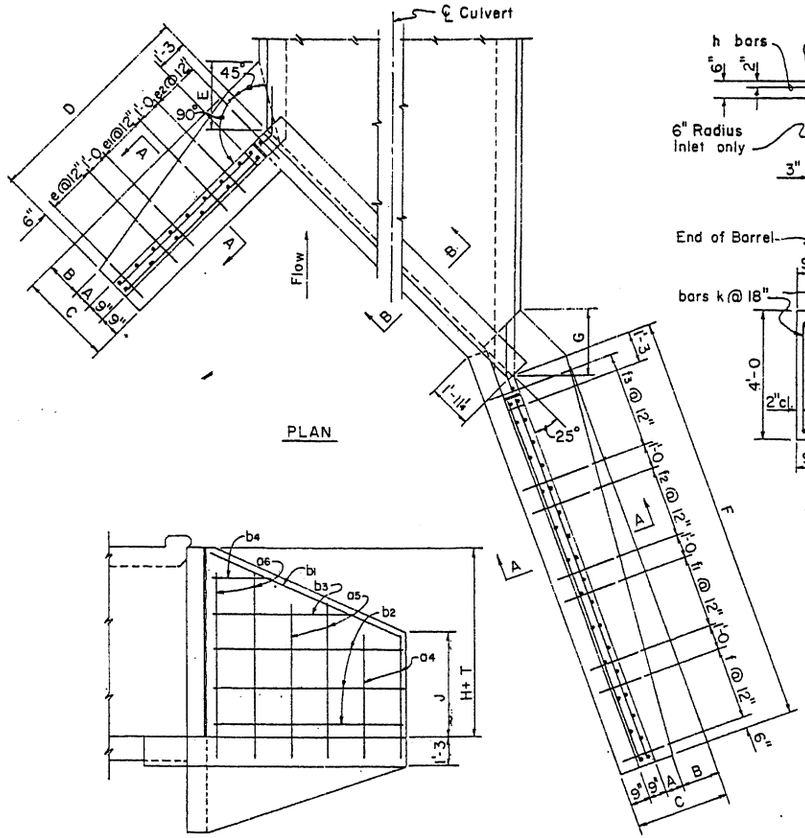

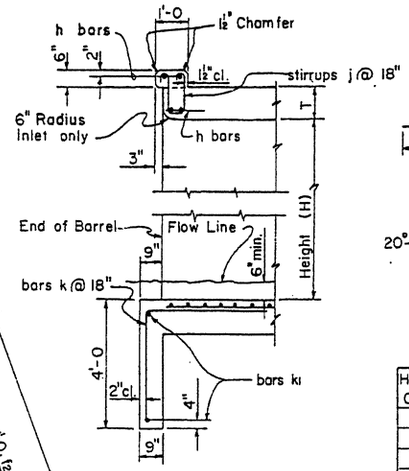

SECTION B-B

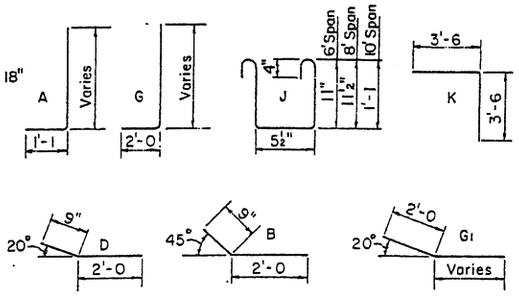

BENDS

DIMENSIONS

Height of Opening	A	B	C	D	E	F	G	J	K
3'	9"	0	2'-3	5'-0	9"	9'-0	8"	1'-4	1'-11
4'	11"	4"	2'-9	6'-0	1'-5	11'-0	1'-3	1'-10	2'-6
5'	1'-1	8"	3'-3	7'-0	2'-2	13'-0	1'-11	2'-4	3'-1
6'	1'-2	1'-4	4'-0	8'-0	3'-3	15'-0	2'-10	2'-10	3'-8
7'	1'-3	1'-9	4'-6	9'-0	3'-11	17'-0	3'-6	3'-4	4'-3

INLET WINGS STEEL LIST

Mark	Bend	3' Height			4' Height			5' Height			6' Height			7' Height		
		No.	Size	Lgth.	No.	Size	Lgth.	No.	Size	Lgth.	No.	Size	Lgth.	No.	Size	Lgth.
SHORT WING																
a	A	2	#5	3'-6	2	#5	3'-9	2	#5	4'-3	3	#5	4'-9	3	#5	5'-3
a1	✓	2	✓	4'-6	2	✓	5'-0	2	✓	5'-6	2	✓	6'-6	3	✓	7'-0
a2	✓	2	✓	5'-9	1	✓	6'-3	2	✓	6'-9	2	✓	7'-9	2	✓	8'-9
a3	✓				2	✓	6'-9	2	✓	7'-9	2	✓	8'-9	2	#6	9'-6
a4	str.	1	#4	2'-6	2	#4	2'-9	2	#4	3'-3	2	#4	3'-9	2	#4	4'-3
a5	✓	1	✓	3'-3	2	✓	4'-6	2	✓	5'-0	2	✓	5'-6	2	✓	6'-0
a6	✓	2	✓	4'-3				1	✓	6'-9	2	✓	7'-3	2	✓	7'-6
b	B	3	#4	2'-9	4	#4	2'-9	5	✓	2'-9	5	✓	2'-9	6	✓	2'-9
b1	str.	2	#6	4'-9	2	#6	5'-9	2	#6	6'-9	2	#6	7'-9	2	#6	9'-0
b2	✓	2	#4	4'-0	4	#4	5'-0	4	#4	6'-0	4	#4	7'-0	6	#4	8'-0
b3	✓	2	✓	3'-0	2	✓	2'-9	2	✓	4'-3	2	✓	6'-0	2	✓	5'-0
b4	✓							2	✓	1'-9	2	✓	3'-3	2	✓	2'-3
e	✓	5	#4	1'-9	2	#4	1'-9	3	✓	2'-0	3	✓	2'-3	3	✓	2'-3
e1	✓				2	✓	2'-0	2	✓	2'-3	3	✓	2'-9	3	✓	3'-0
e2	✓				2	✓	2'-3	2	✓	2'-6	2	✓	3'-3	3	✓	3'-6
g	G	1	#4	7'-6	1	✓	8'-3	1	✓	9'-6	1	✓	10'-3	1	✓	11'-3
m	str.	4	✓	4'-6	4	✓	5'-6	4	✓	6'-6	5	✓	7'-6	5	✓	8'-6
LONG WING																
c	A	3	#5	3'-9	3	#5	4'-3	3	#5	5'-0	3	#5	6'-3	3	#5	6'-3
c1	✓	3	✓	4'-6	3	✓	5'-0	3	✓	5'-9	3	✓	6'-9	3	✓	6'-9
c2	✓	2	✓	5'-3	3	✓	5'-9	3	✓	6'-6	3	✓	7'-3	3	✓	7'-6
c3	✓	2	✓	5'-9	3	✓	6'-6	3	✓	7'-0	3	✓	7'-9	3	✓	8'-3
c4	✓							2	✓	7'-9	2	✓	8'-3	3	✓	8'-9
c5	✓										2	✓	8'-9	3	#6	9'-6
c6	str.	2	#4	2'-9	2	#4	3'-3	2	#4	4'-0	2	#4	5'-3	2	#4	5'-0
c7	✓	2	✓	3'-6	2	✓	4'-0	2	✓	4'-9	2	✓	5'-9	2	✓	5'-9
c8	✓	2	✓	4'-3	2	✓	4'-9	2	✓	5'-3	2	✓	6'-3	2	✓	6'-6
c9	✓				2	✓	5'-6	2	✓	6'-0	2	✓	6'-9	2	✓	7'-0
c10	✓							1	✓	6'-9	2	✓	7'-3	2	✓	7'-9
c11	✓													2	✓	8'-6
d	D	3	#4	2'-9	4	#4	2'-9	5	#4	2'-9	5	#4	2'-9	6	✓	2'-9
d1	str.	2	#6	8'-0	2	#6	10'-3	2	#6	12'-3	2	#6	14'-0	2	#6	16'-6
d2	✓	4	#4	8'-0	4	#4	10'-0	4	#4	12'-0	6	#4	14'-0	6	#4	16'-0
d3	✓				2	✓	6'-6	2	✓	11'-0	2	✓	11'-0	2	✓	13'-3
d4	✓							2	✓	4'-3				2	✓	7'-0
f	✓	9	#4	1'-9	11	#4	2'-0	7	#4	2'-0	4	#4	2'-3	4	#4	2'-3
f1	✓							6	✓	2'-6	4	✓	2'-6	4	✓	2'-9
f2	✓										4	✓	3'-0	4	✓	3'-0
f3	✓										3	✓	3'-3	5	✓	3'-6
g1	G1	1	#4	12'-3	1	#4	14'-3	1	#4	16'-0	1	✓	18'-0	1	✓	20'-0
n	str.	4	✓	9'-0	4	✓	11'-0	4	✓	13'-0	5	✓	15'-0	5	✓	17'-0

SHORT WING ELEVATION
(Front Face Reinf.)

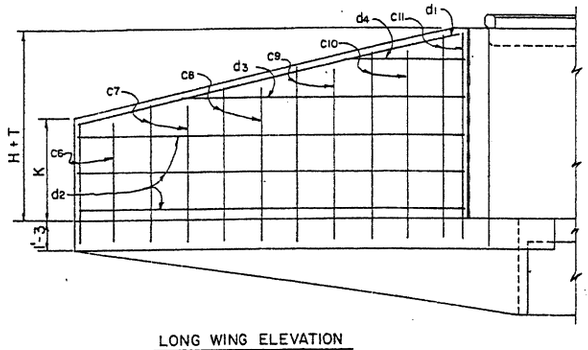

LONG WING ELEVATION
(Front Face Reinf.)

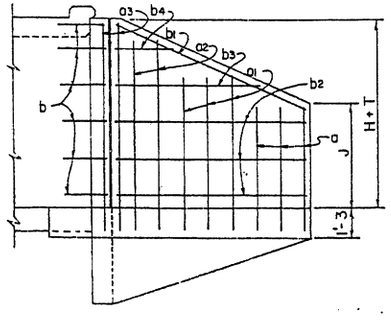

SHORT WING ELEVATION
(Back Face Reinf.)

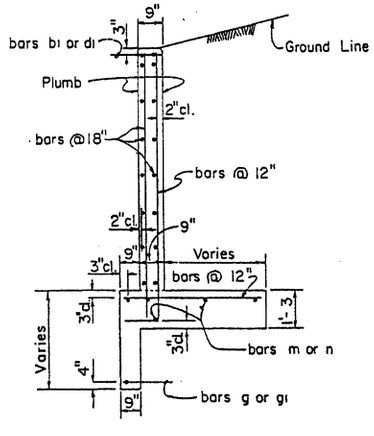

SECTION A-A

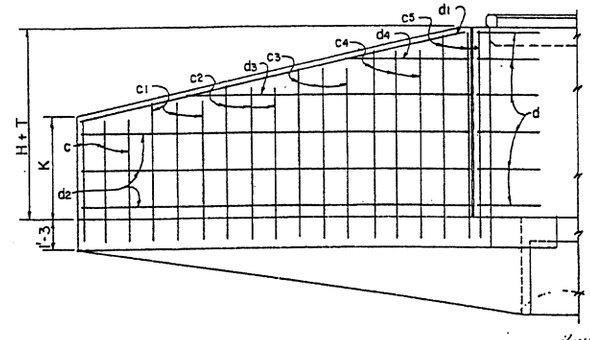

LONG WING ELEVATION
(Back Face Reinf.)

CURB & CUT-OFF WALL STEEL LIST

Mark	Bend	6' Spans					8' Spans					10' Spans				
		1 Barrel			○	◇	1 Barrel			○	◇	1 Barrel			○	◇
		No.	Size	Lgth.	No.	Lgth.	No.	Size	Lgth.	No.	Lgth.	No.	Size	Lgth.	No.	Lgth.
h	str.	4	#6	10'-0		9'-6	4	#6	13'-0		12'-4	4	#7	16'-3		15'-4
j	J	7	#4	3'-6	6		9	#4	3'-6	8		11	#4	3'-9	10	!
k	K	6	✓	7'-0	6		7	✓	7'-0	8		9	✓	7'-0	10	
k1	str.	2	✓	7'-3		9'-6	2	✓	10'-0		12'-4	2	✓	13'-0		15'-4

○ Additional number of bars per each extra barrel.
◇ Additional length of bars per each extra barrel.

NOTE:
See Std. CM-1 for general notes and miscellaneous details.
See Std. CWQ-1 for concrete and steel headwall quantities.

DESIGN APPROVED R. C. Buehler	STATE OF ARIZONA DEPARTMENT OF TRANSPORTATION DIVISION OF HIGHWAYS STANDARD DRAWINGS	REVISION 7-76	
APPROVED FOR DISTRIBUTION	INLET OR OUTLET WINGS 45° SKEW CULVERT 2:1 SLOPE, HEIGHT 3' TO 7'	STANDARD NO. CW2-7 DRAWING NO. B-4.07	

DESIGN	DHY	7-72	NO.	DESCRIPTION OF REVISIONS	MADE BY	DATE
DRAWN	APJ	8-72	①	Curb height now 6"	JTW	7-76
CHECKED	RAB	3-73	②			
			③			

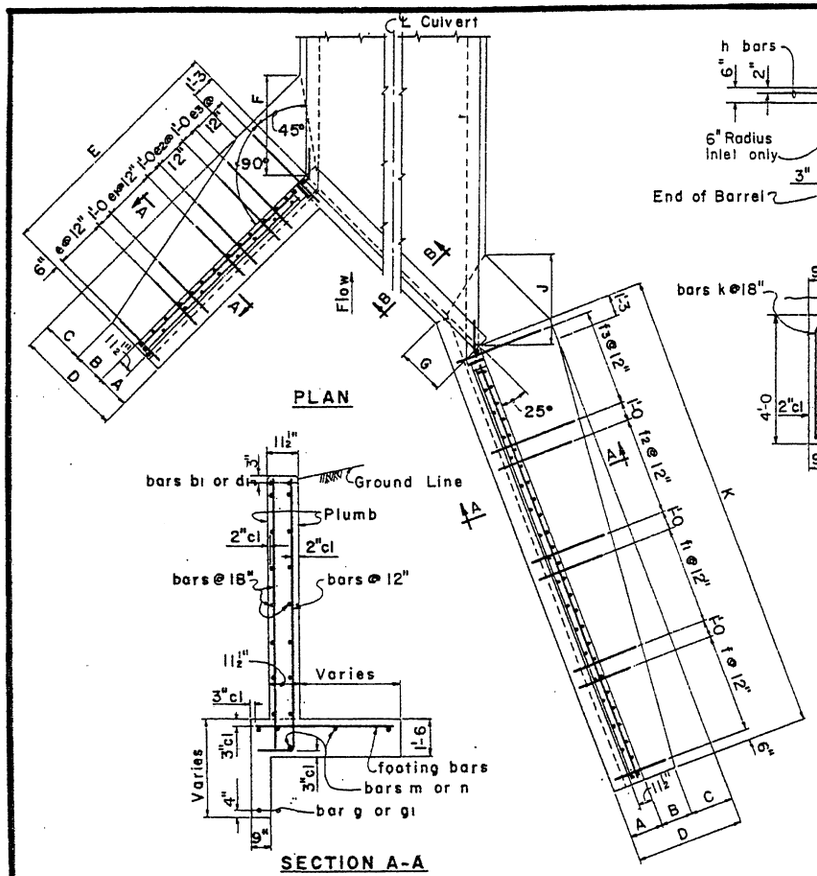

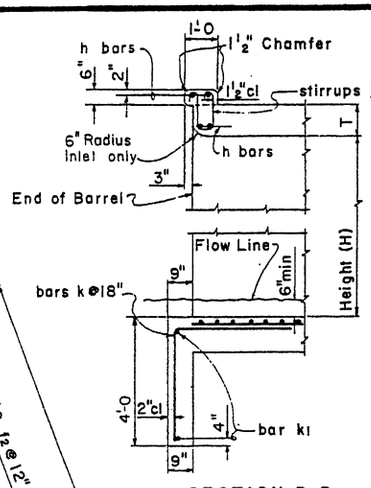

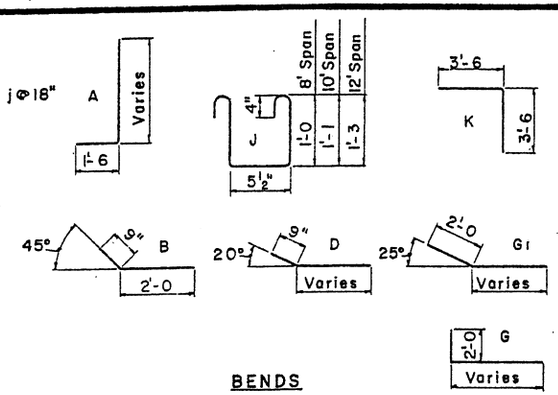

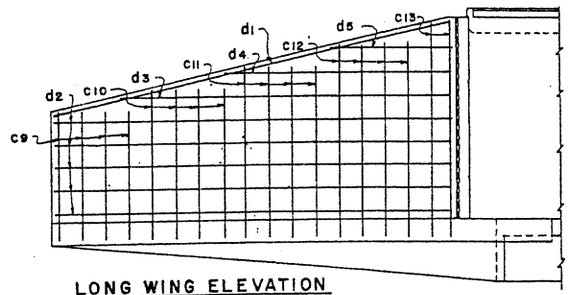

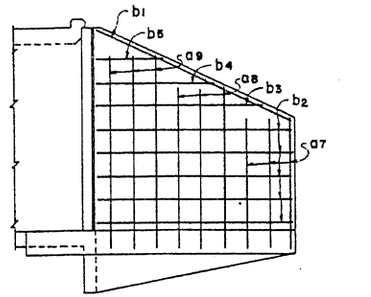

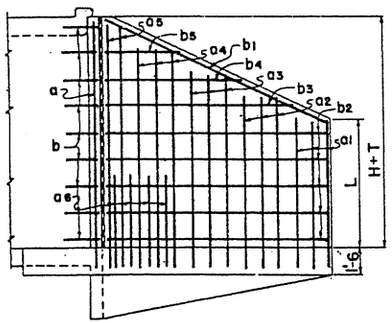

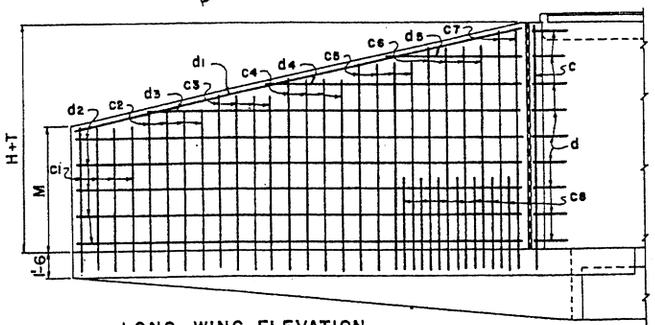

INLET WINGS STEEL LIST

Mark	Bend	8' Height			9' Height			10' Height			11' Height			12' Height		
		No	Size	Lgth	No	Size	Lgth	No	Size	Lgth	No	Size	Lgth	No	Size	Lgth
SHORT WING																
a	A	1	#5	11'-3	1	#6	12'-3	1	#7	13'-3	1	#7	14'-3	1	#7	15'-3
a1	✓	3	✓	6'-9	3	#5	7'-3	3	#5	7'-9	3	#5	8'-3	3	#5	8'-9
a2	✓	3	✓	8'-6	3	✓	8'-9	3	✓	9'-3	3	✓	9'-9	3	#6	10'-3
a3	✓	2	✓	10'-0	3	#6	10'-6	3	#6	11'-0	3	#6	11'-6	3	#7	12'-0
a4	✓	1	✓	11'-3	1	✓	12'-3	2	#7	12'-9	3	#7	13'-3	3	✓	13'-6
a5	✓													2	✓	15'-3
a6	✓										2	#5	6'-3	4	#5	6'-9
a7	str	3	#4	5'-0	3	#4	5'-6	3	#4	6'-0	3	#4	6'-6	3	#4	7'-0
a8	✓	2	✓	7'-9	3	✓	8'-3	3	✓	8'-6	3	✓	9'-0	3	✓	9'-6
a9	✓	1	✓	9'-6	1	✓	10'-9	2	✓	11'-0	2	✓	11'-6	3	✓	12'-0
b	B	6	✓	2'-9	7	✓	2'-9	8	✓	2'-9	8	✓	2'-9	9	✓	2'-9
b1	str	2	#6	10'-0	2	#6	11'-3	2	#6	12'-3	2	#6	13'-3	2	#6	14'-6
b2	✓	6	#4	8'-9	6	#4	9'-9	6	#4	10'-9	8	#4	11'-9	8	#4	12'-6
b3	✓	2	✓	6'-3	2	✓	8'-3	2	✓	9'-9	2	✓	9'-3	2	✓	11'-0
b4	✓	2	✓	3'-9	2	✓	5'-6	2	✓	7'-3	2	✓	6'-6	2	✓	8'-3
b5	✓				2	✓	2'-9	2	✓	4'-9	2	✓	3'-9	2	✓	5'-6
e	✓	3	#4	2'-6	3	✓	2'-9	3	✓	3'-3	4	✓	3'-6	4	✓	3'-9
e1	✓	3	✓	3'-3	3	✓	3'-6	3	✓	3'-9	3	✓	4'-3	4	#5	4'-6
e2	✓	2	✓	4'-0	3	✓	4'-3	3	#5	4'-6	3	#5	5'-0	3	#6	5'-6
e3	✓	2	✓	4'-6	2	#5	4'-9	3	#6	5'-3	3	#6	5'-9	3	#7	6'-3
g	G	1	✓	11'-9	1	#4	12'-9	1	#4	13'-6	1	#4	14'-6	1	#4	15'-6
m	str	5	✓	9'-6	5	✓	10'-6	6	✓	11'-6	6	✓	12'-6	6	✓	13'-6
LONG WING																
c	A	1	#6	11'-3	1	#7	12'-3	1	#7	13'-3	1	#7	14'-3	1	#7	15'-3
c1	✓	4	#5	7'-3	4	#5	8'-0	4	#5	8'-6	4	#5	9'-3	4	#5	9'-9
c2	✓	4	✓	8'-3	4	✓	9'-0	4	✓	9'-6	4	✓	10'-0	4	#6	10'-9
c3	✓	4	✓	9'-3	4	✓	9'-9	4	#6	10'-6	4	#6	11'-0	4	#7	11'-6
c4	✓	4	✓	10'-0	4	#6	10'-9	4	#7	11'-3	4	#7	11'-9	4	✓	12'-6
c5	✓	2	#6	11'-0	4	#7	11'-9	4	✓	12'-3	4	✓	12'-9	4	✓	13'-3
c6	✓							2	✓	13'-0	4	✓	13'-6	4	✓	14'-3
c7	✓													2	✓	15'-0
c8	✓							2	#5	6'-3	7	#5	6'-9	12	✓	6'-9
c9	str	4	#4	5'-9	4	#4	6'-6	4	#4	7'-0	4	#4	7'-9	4	#4	8'-3
c10	✓	4	✓	7'-3	4	✓	7'-9	4	✓	8'-6	4	✓	9'-0	4	✓	9'-6
c11	✓	4	✓	8'-6	4	✓	9'-3	4	✓	9'-9	4	✓	10'-3	4	✓	11'-0
c12	✓				2	✓	10'-6	3	✓	11'-0	4	✓	11'-9	4	✓	12'-3
c13	✓													2	✓	13'-6
d	D	6	#4	2'-9	7	#4	2'-9	7	#4	2'-9	8	#4	2'-9	9	✓	2'-9
d1	str	2	#6	18'-3	2	#6	20'-3	2	#6	22'-3	2	#6	24'-3	2	#6	26'-3
d2	✓	6	#4	17'-9	8	#4	19'-9	8	#4	21'-9	8	#4	23'-9	10	#4	25'-6
d3	✓	2	✓	15'-3	2	✓	13'-6	2	✓	18'-0	2	✓	22'-6	2	✓	20'-6
d4	✓	2	✓	8'-9	2	✓	6'-9	2	✓	11'-3	2	✓	15'-9	2	✓	13'-6
d5	✓							2	✓	4'-6	2	✓	9'-0	2	✓	6'-9
f	✓	5	#4	2'-6	6	#4	2'-9	6	✓	3'-3	7	✓	3'-6	7	✓	3'-9
f1	✓	5	✓	3'-0	5	✓	3'-6	6	✓	3'-9	6	✓	4'-3	7	#5	4'-6
f2	✓	5	✓	3'-6	5	✓	4'-0	6	#5	4'-6	6	#5	4'-9	7	#6	5'-3
f3	✓	4	✓	4'-3	5	#5	4'-6	5	#6	5'-0	6	#6	5'-6	6	#7	6'-0
g1	G1	1	✓	23'-3	1	#4	25'-6	1	#4	27'-6	1	#4	29'-9	1	#4	32'-0
n	str	5	✓	18'-6	5	✓	20'-6	6	✓	22'-6	6	✓	25'-0	6	✓	27'-0

NOTE:
See Std. CM-1 for general notes and miscellaneous details.
See Std. CWQ-1 for concrete and steel headwall quantities.

DIMENSIONS

Height of Opening	A	B	C	D	E	F	G	J	K	L	M
8'	2'-0	1'-0	2'-0	5'-0	10'-0	3'-11	3'-1½	3'-6	19'-0	3'-10	4'-9
9'	2'-1	1'-3	2'-2	5'-6	11'-0	4'-6	3'-3⅞	4'-1	21'-0	4'-4	5'-5
10'	2'-2	1'-6	2'-4	6'-0	12'-0	5'-1	3'-6¼	4'-7	23'-0	4'-10	6'-0
11'	2'-3	1'-9	2'-6	6'-6	13'-0	5'-8	3'-8⅝	5'-1	25'-0	5'-4	6'-7
12'	2'-4	2'-0	2'-8	7'-0	14'-0	6'-3	3'-11	5'-8	27'-0	5'-10	7'-2

CURB & CUT-OFF WALL STEEL LIST

Mark	Bend	8' Spans					10' Spans					12' Spans				
		1 Barrel			○	◇	1 Barrel			○	◇	1 Barrel			○	◇
		No	Size	Lgth	No	Lgth	No	Size	Lgth	No	Lgth	No	Size	Lgth	No	Lgth
h	str	4	#6	13'-0		12'-4	4	#7	16'-3		15'-4	4	#9	19'-3		18'-5
j	J	9	#4	3'-6	8		11	#4	3'-9	10		13	#4	4'-3	12	
k	K	7	✓	7'-0	8		8	✓	7'-0	10		10	✓	7'-0	12	
k1	str	2	✓	8'-3		12'-4	2	✓	10'-9		15'-4	2	✓	13'-6		18'-5

○ Additional number of bars per each extra barrel.
◇ Additional length of bars per each extra barrel.

DESIGN APPROVED R.C. Beckler	STATE OF ARIZONA DEPARTMENT OF TRANSPORTATION DIVISION OF HIGHWAYS STANDARD DRAWINGS	REVISION 7-76	
APPROVED FOR DISTRIBUTION	INLET OR OUTLET WINGS 45° SKEW CULVERT 2:1 SLOPE, HEIGHT 8' TO 12'	STANDARD NO. CW2-8 DRAWING NO. B-4.08	

NO.	DESCRIPTION OF REVISIONS	MADE BY	DATE
1	Stirrups - 12' Span	S.E.A.	10-74
2	Wing thickness & curb height	J.T.W.	7-76

DESIGN B.R.W. ONY 8-72
DRAWN R.W.A., J.N.J. 8-72
CHECKED M.A.B. 8-73

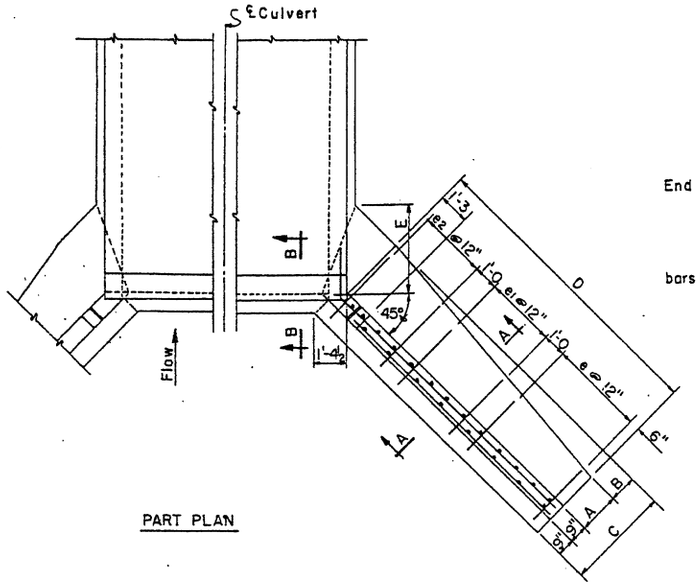

PART PLAN

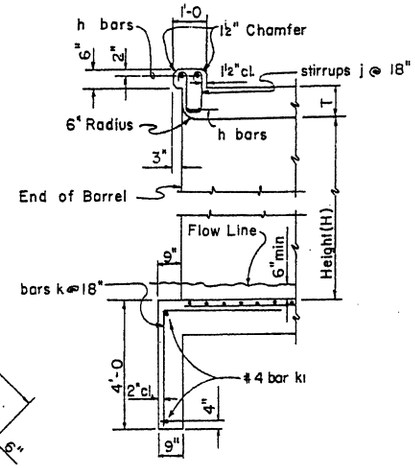

SECTION B-B

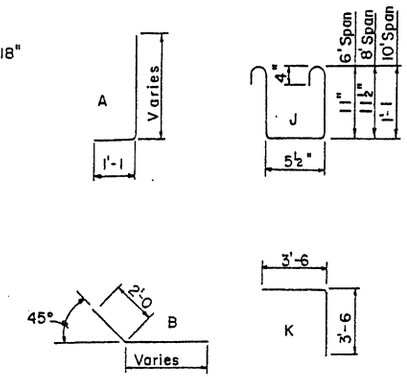

BENDS

INLET WINGS STEEL LIST

Mark	Bend	3' Height			4' Height			5' Height			6' Height			7' Height		
		No	Size	Lgth	No	Size	Lgth	No	Size	Lgth	No	Size	Lgth	No	Size	Lgth
a	A	6	#5	4'-6	8	#5	5'-6	8	#5	6'-3	8	#5	7'-0	8	#5	7'-9
a1	✓	6	✓	5'-3	6	✓	6'-3	8	✓	7'-0	8	✓	7'-9	8	✓	8'-6
a2	✓	4	✓	5'-9	4	✓	6'-9	4	✓	7'-6	4	✓	8'-3	6	✓	9'-3
a3	✓										4	✓	8'-6	4	✓	9'-9
a4	str	4	#4	3'-6	6	#4	4'-6	6	#4	5'-3	6	#4	6'-0	6	#4	6'-9
a5	✓	6	✓	4'-0	6	✓	5'-3	6	✓	6'-0	6	✓	6'-9	6	✓	7'-6
a6	✓										4	✓	7'-6	4	✓	8'-3
b	B	6	#4	2'-9	8	#4	2'-9	10	#4	2'-9	10	✓	2'-9	12	✓	2'-9
b1	str	4	#6	6'-6	4	#6	7'-6	4	#6	8'-6	4	#6	10'-0	4	#6	11'-6
b2	✓	8	#4	6'-6	12	#4	7'-6	12	#4	8'-3	16	#4	10'-0	16	#4	11'-6
b3	✓							4	✓	5'-0				4	✓	8'-3
e	✓	16	#4	1'-9	12	#4	2'-0	10	✓	2'-3	8	#4	2'-6	10	✓	2'-9
e1	✓				6	✓	2'-3	10	✓	2'-6	8	✓	2'-9	8	✓	3'-3
e2	✓										6	✓	3'-0	8	✓	3'-6
g	B	2	#4	9'-9	2	#4	10'-6	2	#4	11'-6	2	✓	13'-0	2	✓	14'-6
m	str	8	✓	7'-0	8	✓	8'-0	10	✓	9'-0	10	✓	10'-6	10	✓	12'-0

CURB & CUT-OFF WALL STEEL LIST

Mark	Bend	Size	6' Spans				8' Spans				10' Spans			
			1 Barrel		○	◇	1 Barrel		○	◇	1 Barrel		○	◇
			No	Lgth	No	Lgth	No	Lgth	No	Lgth	No	Lgth	No	Lgth
h	str	#6	4	7'-0		6'-8	4	9'-3		8'-9	4	11'-3		10'-10
j	J	#4	5	3'-6	4		6	3'-6	6		8	3'-9	7	
k	K	✓	4	7'-0	4		5	7'-0	6		6	7'-0	7	
k1	str	✓	2	4'-9		6'-8	2	6'-9		8'-9	2	8'-9		10'-10

○ Additional number of bars per each extra barrel.
◇ Additional length of bars per each extra barrel.

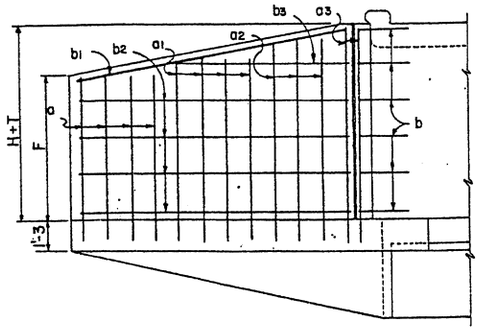

WING ELEVATION
(Back Face Reinf.)

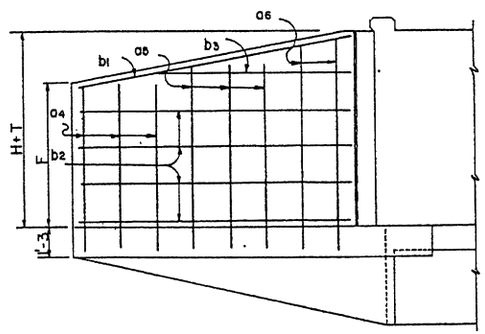

WING ELEVATION
(Front Face Reinf.)

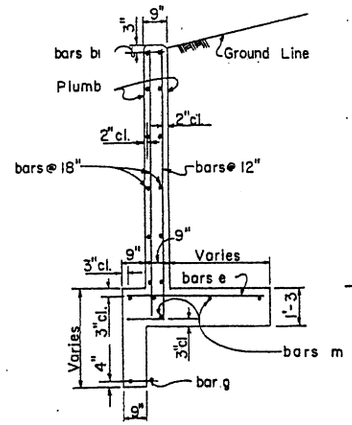

SECTION A-A

DIMENSIONS

Height of Opening	A	B	C	D	E	F
3'	9"	0	2'-3	7'-6	9"	2'-7
4'	11"	4"	2'-9	8'-6	1'-5	3'-6
5'	1'-3	6"	3'-3	9'-6	2'-2	4'-5
6'	1'-6	9"	3'-9	11'-0	2'-10	5'-2
7'	1'-10	11"	4'-3	12'-6	3'-7	5'-11

NOTE:
See Std. CM-1 for general notes and miscellaneous details
See Std. CWQ-1 for concrete and steel headwall quantities.

NO.	DESCRIPTION OF REVISIONS	MADE BY	DATE
1	Curb height now 6"	J T W	7-76
2			
3			

DESIGN		8-72
DRAWN	CAG	8-72
CHECKED	MAB	3-73

DESIGN APPROVED: R.C. Brechler

APPROVED FOR DISTRIBUTION: R.C. Brechler

STATE OF ARIZONA
DEPARTMENT OF TRANSPORTATION
DIVISION OF HIGHWAYS
STANDARD DRAWINGS

INLET WINGS
RIGHT ANGLE CULVERT
6:1 SLOPE, HEIGHT 3' TO 7'

REVISION 7-76

STANDARD NO. CW6-1

DRAWING NO. B-5.01

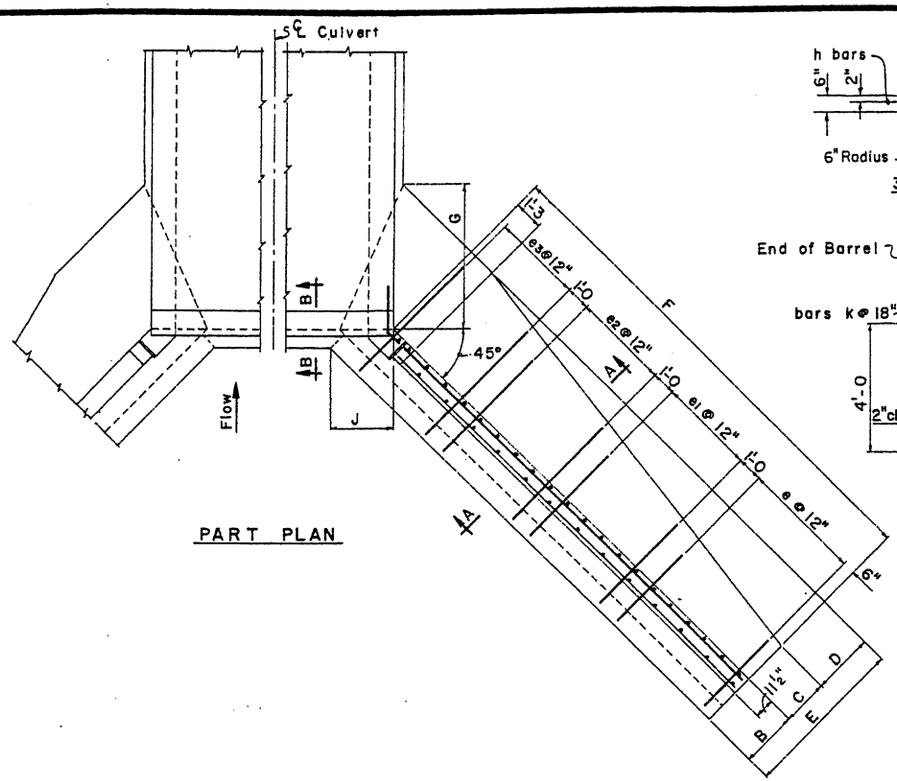

PART PLAN

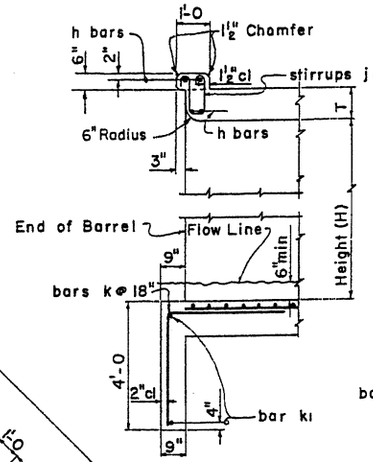

SECTION B-B

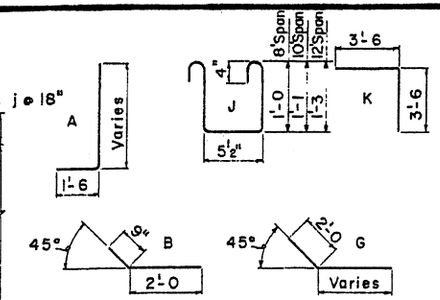

BENDS

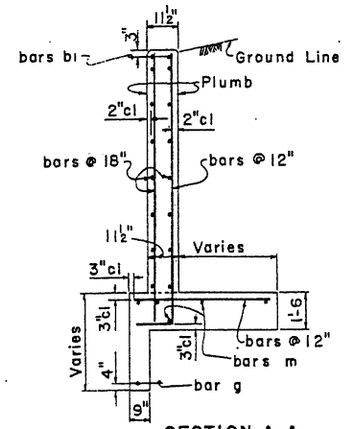

SECTION A-A

INLET WINGS STEEL LIST

Mark	Bend	8' Height			9' Height			10' Height			11' Height			12' Height		
		No	Size	Lgth	No	Size	Lgth	No	Size	Lgth	No	Size	Lgth	No	Size	Lgth
a	A	2	#5	11'-3	2	#6	12'-3	2	#7	13'-3	2	#7	14'-3	2	#7	15'-3
a1	✓	8	✓	9'-3	8	#5	9'-9	8	#5	10'-3	8	#6	10'-9	8	#6	11'-0
a2	✓	8	✓	10'-0	8	✓	10'-6	8	#6	11'-0	8	✓	11'-6	8	✓	12'-0
a3	✓	8	✓	10'-6	8	#6	11'-3	8	✓	11'-9	8	#7	12'-6	8	#7	13'-0
a4	✓	2	✓	11'-3	6	✓	12'-0	8	#7	12'-6	8	✓	13'-3	8	✓	13'-9
a5	✓							2	✓	13'-3	4	✓	14'-0	8	✓	14'-9
a6	✓										8	#5	6'-3	14	#5	6'-9
a7	str	8	#4	7'-9	8	#4	8'-3	8	#4	8'-9	8	#4	9'-3	8	#4	9'-6
a8	✓	8	✓	8'-9	8	✓	9'-3	8	✓	9'-9	8	✓	10'-6	8	✓	10'-9
a9	✓	2	✓	9'-9	4	✓	10'-6	6	✓	11'-0	8	✓	11'-9	8	✓	12'-3
a10	✓													2	✓	13'-9
b	B	12	#4	2'-9	14	#4	2'-9	14	#4	2'-9	16	#4	2'-9	18	✓	2'-9
b1	str	4	#6	13'-0	4	#6	15'-0	4	#6	16'-6	4	#6	18'-3	4	#6	19'-9
b2	✓	16	#4	12'-9	20	#4	14'-9	20	#4	16'-3	20	#4	17'-9	24	#4	19'-3
b3	✓	4	✓	11'-3	4	✓	7'-9	4	✓	12'-3	4	✓	16'-3	4	✓	12'-9
b4	✓							4	✓	4'-9	4	✓	9'-3	4	✓	6'-3
e	✓	8	#4	3'-3	8	#4	3'-6	10	✓	3'-9	10	✓	4'-0	12	✓	4'-3
e1	✓	8	✓	3'-6	8	✓	3'-9	10	✓	4'-3	10	#5	4'-6	10	#5	5'-0
e2	✓	8	✓	3'-9	8	✓	4'-3	8	#5	4'-9	10	#6	5'-0	10	#6	5'-6
e3	✓	4	✓	4'-3	8	#5	4'-6	8	#6	5'-0	8	✓	5'-6	10	#7	6'-0
g	G	2	✓	16'-0	2	#4	18'-0	2	#4	19'-6	2	#4	21'-0	2	#4	22'-6
m	str	10	✓	13'-6	10	✓	15'-6	10	✓	17'-0	12	✓	18'-6	12	✓	20'-0

CURB & CUT-OFF WALL STEEL LIST

Mark	Bend	Size	8' Spans				10' Spans				12 Spans			
			1 Barrel		○	◇	1 Barrel		○	◇	1 Barrel		○	◇
			No	Lgth	No	Lgth	No	Lgth	No	Lgth	No	Lgth	No	Lgth
h	str	#6	4	9'-3		8'-9	4	11'-3		10'-10	4	13'-6		13'-0
j	J	#4	6	3'-6	6		8	3'-9	7		9	4'-3	8	
k	K	✓	5	7'-0	6		5	7'-0	7		7	7'-0	8	
k1	str	✓	2	5'-3		8'-9	2	7'-0		10'-10	2	9'-0		13'-0

○ Additional number of bars per each extra barrel.
◇ Additional length of bars per each extra barrel.

DIMENSIONS

Height of Opening	B	C	D	E	F	G	J	K
8'	2'-0	1'-9	1'-0	4'-9	14'-0	3'-7	2'-1	6'-7
9'	2'-1	1'-11	1'-3	5'-3	16'-0	4'-2	2'-2⅜	7'-1
10'	2'-2	2'-1	1'-6	5'-9	17'-6	4'-9	2'-3¾	7'-7
11'	2'-3	2'-3	1'-9	6'-3	19'-0	5'-4	2'-5⅛	8'-1
12'	2'-4	2'-5	2'-0	6'-9	20'-6	5'-11	2'-6⅝	8'-4

NOTE:
See Std. CM-1 for general notes and miscellaneous details.
See Std. CWQ-1 for concrete and steel headwall quantities.

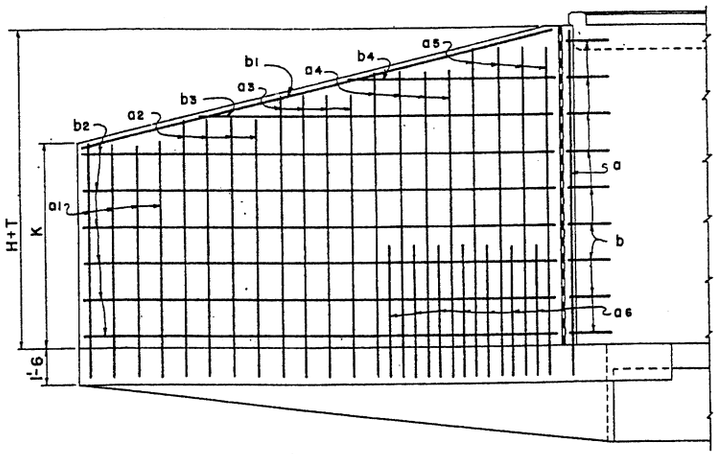

WING ELEVATION
(Back Face Reinf.)

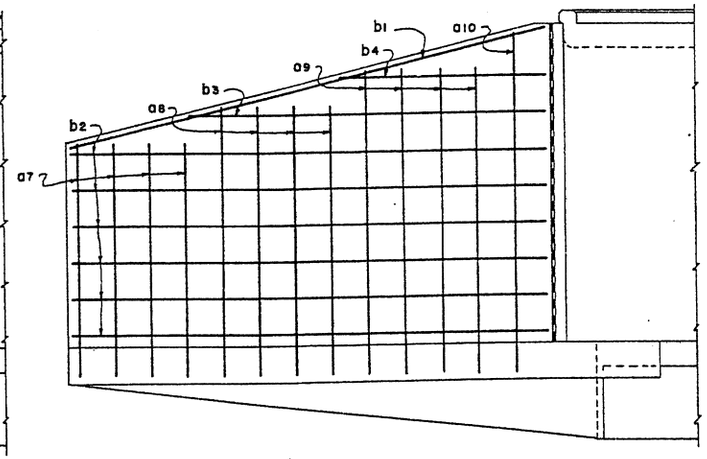

WING ELEVATION
(Front Face Reinf.)

DESIGN	GBW, DHY	8-72	NO.	DESCRIPTION OF REVISIONS	MADE BY	DATE
DRAWN	RWN, APJ	8-72	1	Stirrups - 12' Span	JEA	10-74
CHECKED	WT, HAB	3-73	2	Wing thickness & curb height	JTW	7-76

DESIGN APPROVED R.C. Beckle	STATE OF ARIZONA DEPARTMENT OF TRANSPORTATION DIVISION OF HIGHWAYS STANDARD DRAWINGS	REVISION 7-76	
APPROVED, FOR DISTRIBUTION	INLET WINGS RIGHT ANGLE CULVERT 6:1 SLOPE, HEIGHT 8' TO 12'	STANDARD NO. CW6-2	DRAWING NO. B-5.02

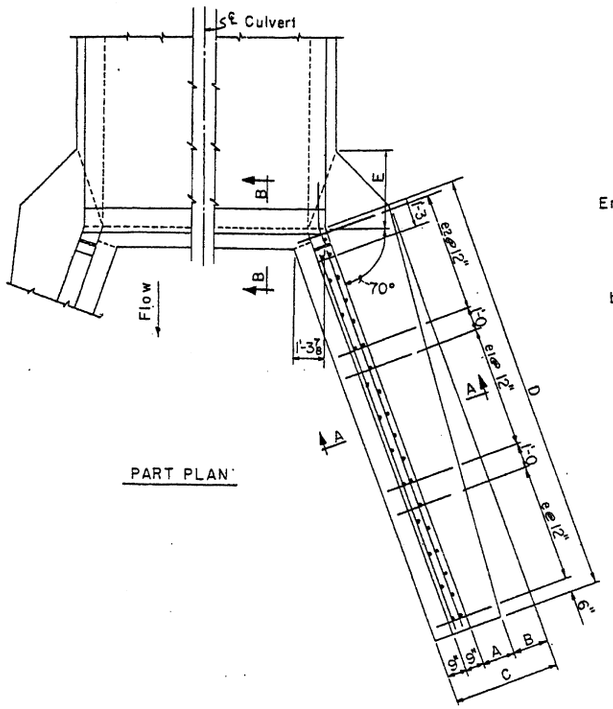

PART PLAN

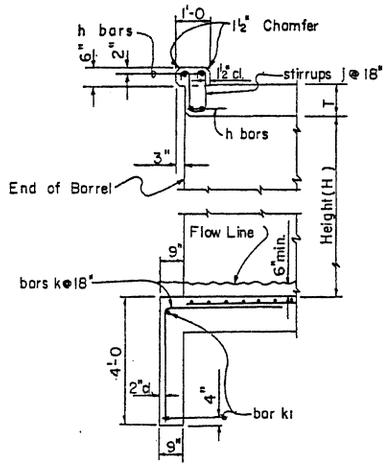

SECTION B-B

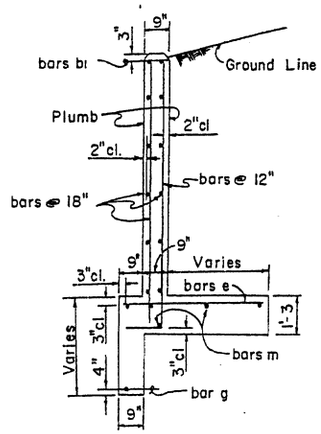

SECTION A-A

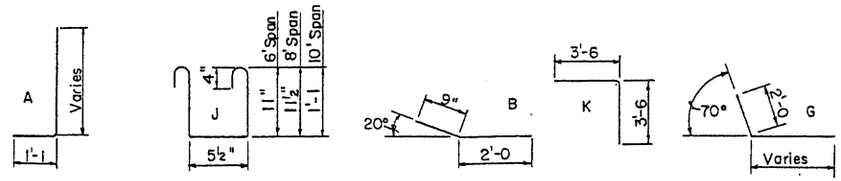

BENDS

OUTLET WINGS STEEL LIST

Mark	Bend	3' Height			4' Height			5' Height			6' Height			7' Height		
		No	Size	Lgth	No	Size	Lgth	No	Size	Lgth	No	Size	Lgth	No	Size	Lgth
a	A	8	#5	4'-3	8	#5	4'-9	8	#5	5'-6	8	#5	6'-0	8	#5	6'-6
a1	✓	6	✓	5'-0	6	✓	5'-9	8	✓	6'-3	8	✓	6'-9	8	✓	7'-3
a2	✓	4	✓	5'-9	4	✓	6'-3	8	✓	7'-0	8	✓	7'-6	8	✓	8'-0
a3	✓				4	✓	6'-9	4	✓	7'-9	4	✓	8'-3	8	✓	8'-9
a4	✓										4	✓	8'-9	4	✓	9'-6
a5	str	6	#4	3'-3	6	#4	3'-9	6	#4	4'-6	6	#4	5'-0	6	#4	5'-3
a6	✓	6	✓	4'-3	6	✓	4'-9	6	✓	5'-3	6	✓	5'-9	6	✓	6'-3
a7	✓				2	✓	5'-6	6	✓	6'-3	6	✓	6'-9	6	✓	7'-3
a8	✓										2	✓	7'-6	6	✓	8'-0
b	B	6	#4	2'-9	8	#4	2'-9	10	#4	2'-9	10	✓	2'-9	12	✓	2'-9
b1	str	4	#6	7'-3	4	#6	9'-6	4	#6	12'-6	4	#6	14'-6	4	#6	16'-9
b2	✓	8	#4	7'-0	8	#4	9'-3	12	#4	12'-3	12	#4	14'-3	12	#4	16'-6
b3	✓				4	✓	6'-9	4	✓	5'-9	4	✓	9'-3	4	✓	13'-9
b4	✓													4	✓	6'-9
e	✓	16	#4	1'-9	12	#4	1'-9	10	#4	2'-0	12	#4	2'-3	12	✓	2'-3
e1	✓				10	✓	2'-0	10	✓	2'-3	12	✓	2'-6	12	✓	2'-9
e2	✓							8	✓	2'-6	8	✓	3'-0	12	✓	3'-3
g	G	2	#4	10'-0	2	#4	12'-6	2	✓	15'-6	2	✓	17'-3	2	✓	19'-3
m	str	8	✓	7'-6	8	✓	10'-0	10	✓	13'-0	10	✓	15'-0	10	✓	17'-0

CURB & CUT-OFF WALL STEEL LIST

Mark	Bend	Size	6' Spans					8' Spans					10' Spans				
			1 Barrel		○		◇	1 Barrel		○		◇	1 Barrel		○		◇
			No	Lgth	No		Lgth	No	Lgth	No		Lgth	No	Lgth	No		Lgth
h	str	#6	4	7'-0			6'-8	4	9'-3			8'-9	4	11'-3			10'-10
j	J	#4	5	3'-6	4			6	3'-6	6			8	3'-9	7		
k	K	✓	4	7'-0	4			5	7'-0	5			6	7'-0	7		
k1	str	✓	2	4'-9			6'-8	2	6'-9			8'-9	2	8'-9			10'-10

○ Additional number of bars per each extra barrel.
◇ Additional length of bars per each extra barrel.

DIMENSIONS

Height of Opening	A	B	C	D	E	F
3'	9"	0	2'-3	8'-0	8"	2'-3
4'	11"	4"	2'-9	10'-6	1'-3	2'-10
5'	1'-1	8"	3'-3	13'-6	1'-11	3'-7
6'	1'-2	1'-1	3'-9	15'-6	2'-7	4'-1
7'	1'-3	1'-6	4'-3	17'-6	3'-2	4'-5

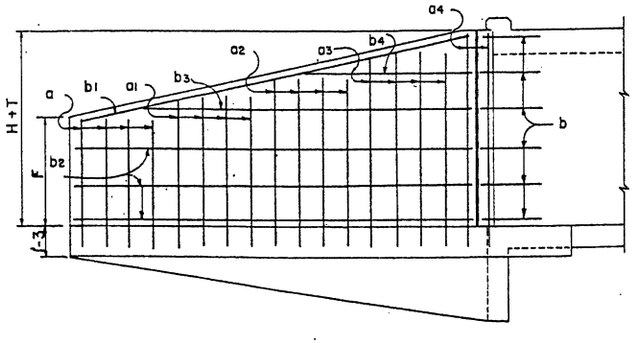

WING ELEVATION
(Back Face Reinf.)

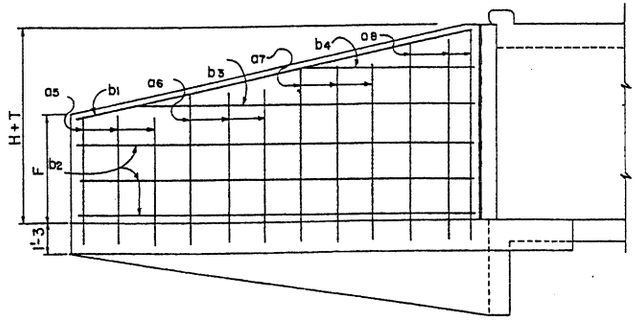

WING ELEVATION
(Front Face Reinf.)

NOTE:
See Std. CM-1 for general notes and miscellaneous details.
See Std. CWQ-1 for concrete and steel headwall quantities.

NO.	DESCRIPTION OF REVISIONS	MADE BY	DATE
1	Wing Length-D	SEA	10-74
2	Curb height now 6"	JTW	7-76
3			

DESIGN	DRY	8-72
DRAWN	CAG	8-72
CHECKED	MAB	3-73

DESIGN APPROVED	STATE OF ARIZONA DEPARTMENT OF TRANSPORTATION DIVISION OF HIGHWAYS STANDARD DRAWINGS	REVISION 7-76
APPROVED FOR DISTRIBUTION	OUTLET WINGS RIGHT ANGLE CULVERT 6:1 SLOPE, HEIGHT 3' TO 7'	STANDARD NO. CW6-3 DRAWING NO. B-5.03

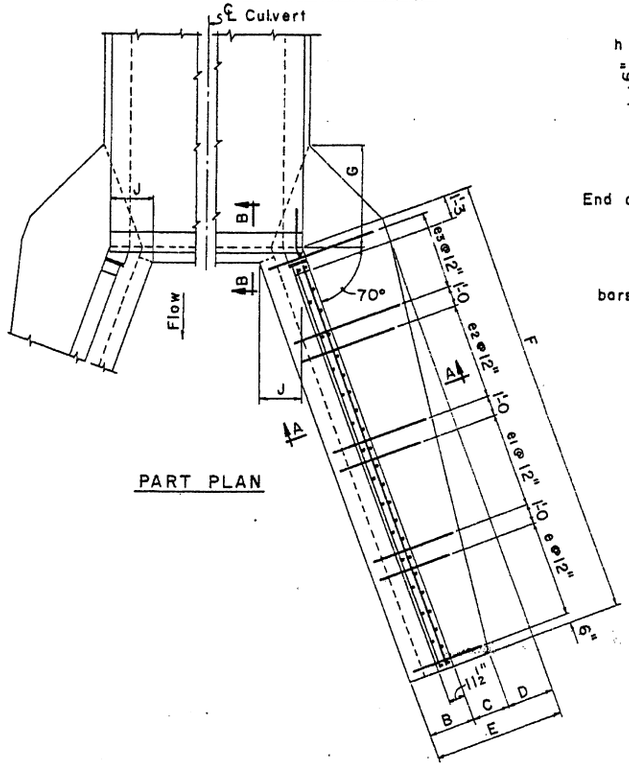

PART PLAN

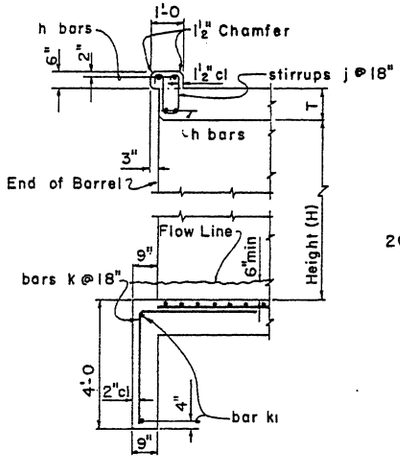

SECTION B-B

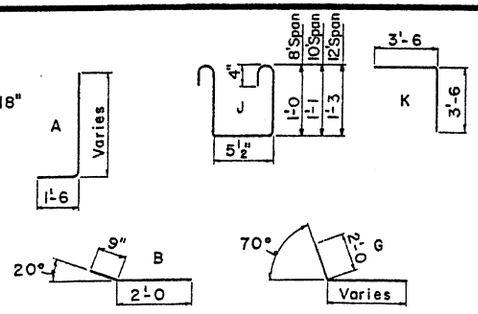

BENDS

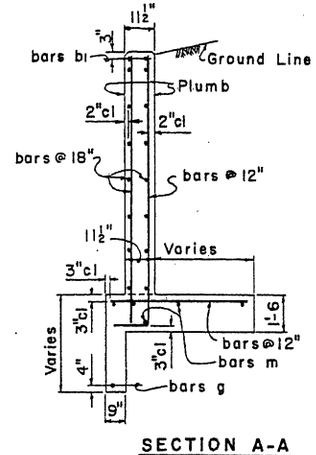

SECTION A-A

OUTLET WINGS STEEL LIST

Mark	Bend	8' Height			9' Height			10' Height			11' Height			12' Height		
		No	Size	Lgth	No	Size	Lgth	No	Size	Lgth	No	Size	Lgth	No	Size	Lgth
a	A	2	#5	11'-3	2	#6	12'-3	2	#7	13'-3	2	#7	14'-3	2	#7	15'-3
a1	✓	8	✓	7'-6	8	#5	7'-9	8	#5	8'-0	8	#5	8'-3	8	#5	8'-6
a2	✓	8	✓	8'-3	8	✓	8'-9	8	✓	9'-0	8	✓	9'-6	8	✓	9'-9
a3	✓	8	✓	9'-3	8	✓	9'-9	8	✓	10'-3	8	✓	10'-6	8	#6	11'-0
a4	✓	8	✓	10'-3	8	#6	10'-9	8	#6	11'-3	8	#6	11'-9	8	#7	12'-3
a5	✓	4	✓	11'-0	6	✓	11'-9	8	#7	12'-6	8	#7	13'-0	8	✓	13'-6
a6	✓										2	✓	14'-3	4	✓	15'-0
a7	✓										6	#5	6'-3	12	#5	6'-9
a8	str	8	#4	5'-9	8	#4	6'-3	8	#4	6'-6	8	#4	6'-9	8	#4	7'-0
a9	✓	8	✓	7'-3	8	✓	7'-9	8	✓	8'-3	8	✓	8'-6	8	✓	8'-9
a10	✓	8	✓	8'-6	8	✓	9'-3	8	✓	9'-9	8	✓	10'-3	8	✓	10'-9
a11	✓				2	✓	10'-9	4	✓	11'-6	4	✓	12'-3	6	✓	12'-9
b	B	12	#4	2'-9	14	✓	2'-9	14	✓	2'-9	16	✓	2'-9	18	✓	2'-9
b1	str	4	#6	18'-3	4	#6	19'-3	4	#6	20'-6	4	#6	21'-9	4	#6	22'-9
b2	✓	12	#4	17'-9	12	#4	18'-9	16	#4	19'-9	16	#4	20'-9	16	#4	21'-9
b3	✓	4	✓	15'-0	4	✓	17'-6	4	✓	14'-0	4	✓	16'-6	4	✓	18'-3
b4	✓	4	✓	8'-6	4	✓	11'-6	4	✓	8'-9	4	✓	11'-6	4	✓	13'-9
b5	✓				4	✓	5'-9	4	✓	3'-3	4	✓	6'-6	4	✓	9'-0
e	✓	10	#4	2'-6	10	✓	2'-9	12	✓	3'-0	12	✓	3'-3	12	✓	3'-6
e1	✓	10	✓	3'-0	10	✓	3'-3	10	✓	3'-9	12	#5	4'-0	12	#5	4'-3
e2	✓	10	✓	3'-6	10	✓	3'-9	10	#5	4'-3	12	#6	4'-9	12	#6	5'-0
e3	✓	8	✓	4'-0	10	#5	4'-6	10	#6	4'-9	8	✓	5'-6	10	#7	5'-9
g	G	2	✓	20'-9	2	#4	21'-9	2	#4	22'-9	2	#4	23'-9	2	#4	24'-9
m	str	10	✓	18'-6	10	✓	19'-6	12	✓	20'-6	12	✓	21'-6	12	✓	22'-6

CURB & CUT-OFF WALL STEEL LIST

Mark	Bend	Size	8' Spans				10' Spans				12' Spans			
			1 Barrel		○	◇	1 Barrel		○	◇	1 Barrel		○	◇
			No	Lgth	No	Lgth	No	Lgth	No	Lgth	No	Lgth	No	Lgth
h	str	#6	4	9'-3		8'-9	4	11'-3		10'-10	4	13'-6		13'-0
j	J	#4	6	3'-6	6		8	3'-9	7		9	4'-3	8	
k	K	✓	4	7'-0	6		6	7'-0	7		7	7'-0	8	
k1	str	✓	2	5'-9		8'-9	2	7'-6		10'-10	2	9'-6		13'-0

○ Additional number of bars per each extra barrel.
◇ Additional length of bars per each extra barrel.

DIMENSIONS

Height of Opening	B	C	D	E	F	G	J	K
8'	2'-0	1'-0	1'-9	4'-9	19'-0	3'-2	1-10¼	4'-9
9'	2'-1	1'-2	2'-0	5'-3	20'-0	3'-9	1-11⅝	5'-1
10'	2'-2	1'-4	2'-3	5'-9	21'-0	4'-3	2'-0⅝	5'-4
11'	2'-3	1'-6	2'-6	6'-3	22'-0	4'-10	2'-1½	5'-7
12'	2'-4	1'-8	2'-9	6'-9	23'-0	5'-4	2'-2½	5'-9

NOTE:
See Std. CM-1 for general notes and miscellaneous details.
See Std. CWQ-1 for concrete and steel headwall quantities.

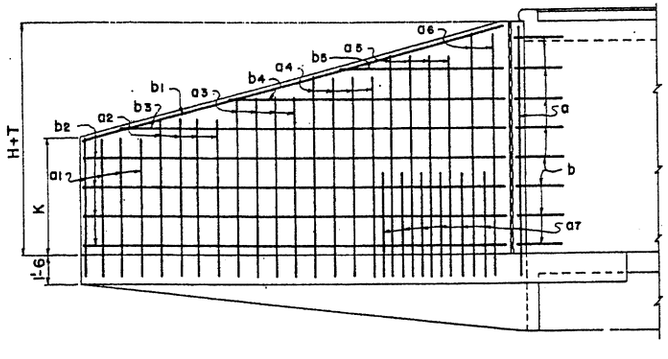

WING ELEVATION
(Back Face Reinf.)

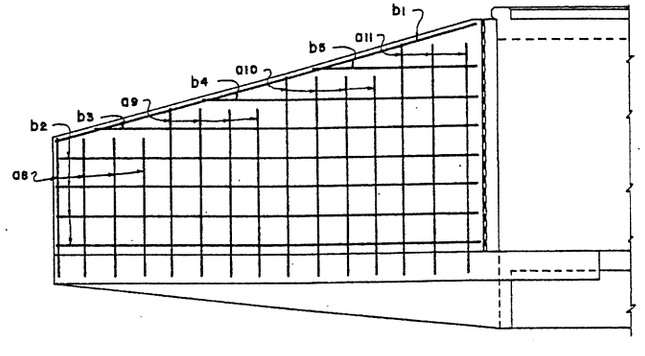

WING ELEVATION
(Front Face Reinf.)

NO.	DESCRIPTION OF REVISIONS	MADE BY	DATE
1	Stirrups - 12' Span	S.E.A.	10-74
2	Wing thickness & curb height	J.T.W.	7-76
3			

DESIGNER	GBM, DHY	8-72
DRAWN	RWM, APJ	8-72
CHECKED	WT, MAB	3-73

DESIGN APPROVED: K. C. Beckler
APPROVED FOR DISTRIBUTION: E. H. Anderson

STATE OF ARIZONA
DEPARTMENT OF TRANSPORTATION
DIVISION OF HIGHWAYS
STANDARD DRAWINGS

OUTLET WINGS
RIGHT ANGLE CULVERT
6:1 SLOPE, HEIGHT 8' TO 12'

REVISION 7-76
STANDARD NO. CW6-4
DRAWING NO. B-5.04

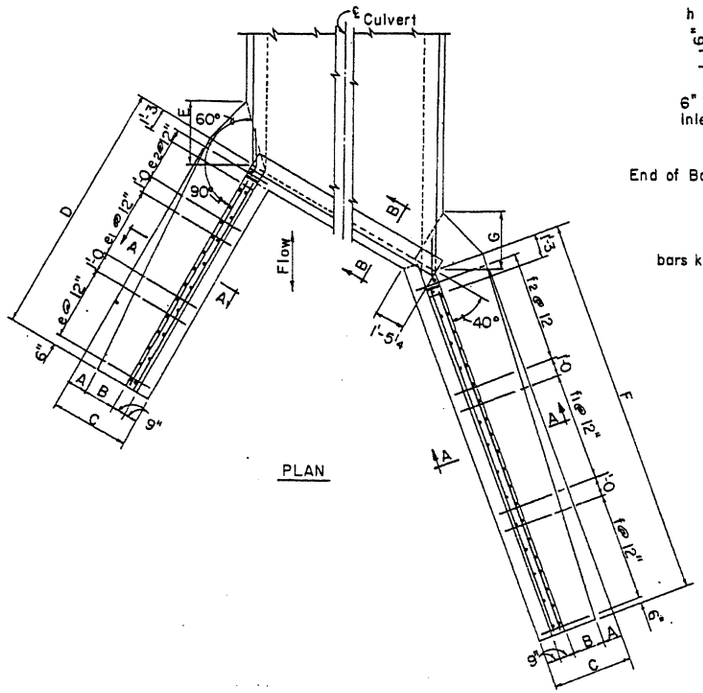

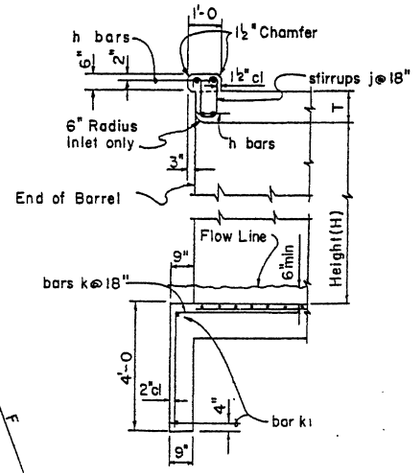

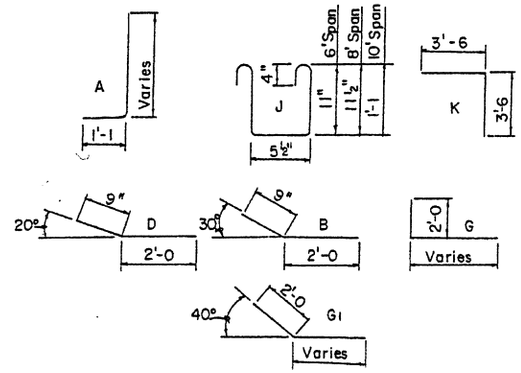

DIMENSIONS

Height of Opening	A	B	C	D	E	F	G	J	K
3'	0	9"	2'-3	7'-0	8"	10'-6	8"	2'-4	2'-4
4'	4"	11"	2'-9	9'-0	1'-5	13'-6	1'-3	3'-0	3'-1
5'	7"	1'-2	3'-3	11'-0	2'-1	16'-6	1'-11	3'-10	3'-11
6'	1'-0	1'-3	3'-9	12'-6	2'-9	19'-6	2'-7	4'-5	4'-5
7'	1'-3	1'-6	4'-3	14'-0	3'-5	21'-0	3'-2	4'-11	5'-0

INLET OR OUTLET WINGS STEEL LIST

Mark	Bend	3' Height			4' Height			5' Height			6' Height			7' Height		
		No	Size	Lgth	No	Size	Lgth	No	Size	Lgth	No	Size	Lgth	No	Size	Lgth
SHORT WING																
a	A	3	#5	4'-3	4	#5	5'-0	4	#5	5'-9	4	#5	6'-3	4	#5	6'-9
a1	✓	3	✓	5'-0	4	✓	5'-9	4	✓	6'-6	4	✓	7'-3	4	✓	7'-9
a2	✓	2	✓	5'-9	2	✓	6'-6	2	✓	7'-3	3	✓	8'-0	4	✓	8'-6
a3	✓							2	✓	7'-6	2	✓	8'-6	3	✓	9'-6
a4	str.	2	#4	3'-3	3	#4	3'-9	3	#4	4'-9	3	#4	5'-3	3	#4	5'-9
a5	✓	2	✓	4'-0	3	✓	4'-9	3	✓	5'-6	3	✓	6'-3	3	✓	6'-9
a6	✓	1	✓	4'-9				2	✓	6'-6	2	✓	7'-0	4	✓	7'-9
b	B	3	✓	2'-9	4	#4	2'-9	5	✓	2'-9	5	✓	2'-9	6	✓	2'-9
b1	str.	2	#6	6'-3	2	#6	8'-3	2	#6	10'-0	2	#6	11'-6	2	#6	13'-3
b2	✓	4	#4	6'-0	4	#4	8'-0	6	#4	10'-0	6	#4	11'-3	6	#4	13'-0
b3	✓				2	✓	6'-9	2	✓	4'-6	2	✓	8'-9	2	✓	12'-0
b4	✓													2	✓	6'-9
e	✓	7	#4	1'-9	5	#4	1'-9	4	#4	2'-9	5	#4	2'-3	5	✓	2'-6
e1	✓				4	✓	2'-0	4	✓	2'-3	4	✓	2'-9	5	✓	3'-0
e2	✓							3	✓	2'-6	4	✓	3'-0	4	✓	3'-6
g	G	1	#4	8'-9	1	#4	10'-9	1	✓	12'-9	1	✓	14'-0	1	✓	15'-6
m	str.	4	✓	6'-6	4	✓	8'-6	5	✓	10'-6	5	✓	12'-0	5	✓	13'-6
LONG WING																
c	A	3	#5	4'-3	4	#5	5'-0	4	#5	5'-9	5	#5	6'-3	5	#5	7'-0
c1	✓	3	✓	4'-9	4	✓	5'-6	4	✓	6'-3	5	✓	7'-0	5	✓	7'-6
c2	✓	3	✓	5'-3	4	✓	6'-0	4	✓	6'-9	5	✓	7'-6	5	✓	8'-3
c3	✓	2	✓	5'-9	2	✓	6'-6	3	✓	7'-3	3	✓	8'-3	5	✓	9'-0
c4	✓							2	✓	7'-9	2	✓	8'-6	2	✓	9'-6
c5	str.	2	#4	3'-3	3	#4	4'-0	3	#4	4'-9	4	#4	5'-3	4	#4	5'-9
c6	✓	2	✓	3'-9	3	✓	4'-6	3	✓	5'-3	4	✓	6'-0	4	✓	6'-9
c7	✓	2	✓	4'-3	3	✓	5'-3	3	✓	5'-9	4	✓	6'-9	4	✓	7'-6
c8	✓	1	✓	4'-6				2	✓	6'-6	1	✓	7'-6	2	✓	8'-3
d	D	3	✓	2'-9	4	#4	2'-9	5	✓	2'-9	5	✓	2'-9	6	✓	2'-9
d1	str.	2	#6	9'-6	2	#6	12'-6	2	#6	15'-6	2	#6	18'-6	2	#6	20'-3
d2	✓	4	#4	9'-3	4	#4	12'-3	6	#4	15'-3	6	#4	18'-3	6	#4	20'-0
d3	✓				2	✓	11'-0	2	✓	7'-3	2	✓	14'-3	2	✓	19'-0
d4	✓													2	✓	10'-0
f	✓	11	#4	1'-9	7	#4	1'-9	6	#4	2'-0	7	#4	2'-3	7	✓	2'-6
f1	✓				7	✓	2'-0	6	✓	2'-3	7	✓	2'-6	7	✓	3'-0
f2	✓							5	✓	2'-6	6	✓	3'-0	7	✓	3'-3
g1	G1	1	#4	12'-9	1	#4	15'-9	1	✓	18'-6	1	✓	21'-6	1	✓	23'-0
n	str.	4	✓	10'-0	4	✓	13'-0	5	✓	16'-0	5	✓	19'-0	5	✓	20'-6

CURB & CUT-OFF WALL STEEL LIST

Mark	Bend	6' Spans					8' Spans					10' Spans				
		1 Barrel			○	◇	1 Barrel			○	◇	1 Barrel			○	◇
		No	Size	Lgth	No	Lgth	No	Size	Lgth	No	Lgth	No	Size	Lgth	No	Lgth
h	str.	4	#6	8'-0		7'-9	4	#6	10'-6		10'-1	4	#6	13'-0		12'-6
j	J	6	#4	3'-6	5		7	#4	3'-6	7		9	#4	3'-9	8	
k	K	4	✓	7'-0	5		6	✓	7'-0	6		7	✓	7'-0	8	
k1	str.	2	✓	5'-9		7'-9	2	✓	8'-0		10'-1	2	✓	10'-6		12'-6

○ Additional number of bars per each extra barrel.
◇ Additional length of bars per each extra barrel.

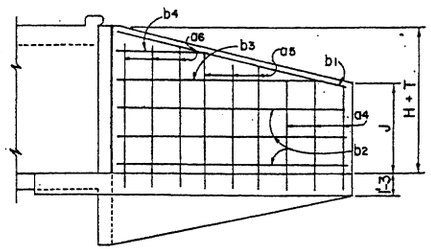

SHORT WING ELEVATION
(Front Face Reinf.)

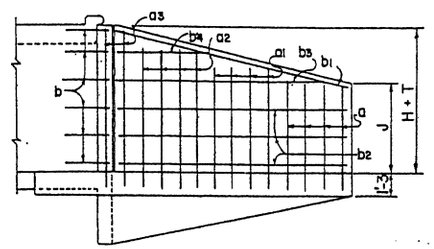

SHORT WING ELEVATION
(Back Face Reinf.)

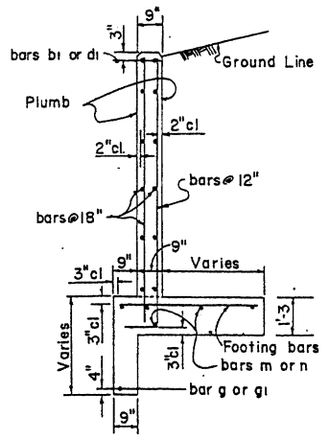

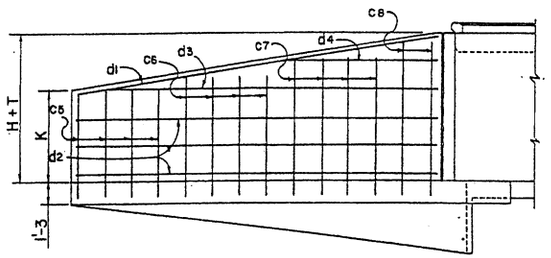

LONG WING ELEVATION
(Front Face Reinf.)

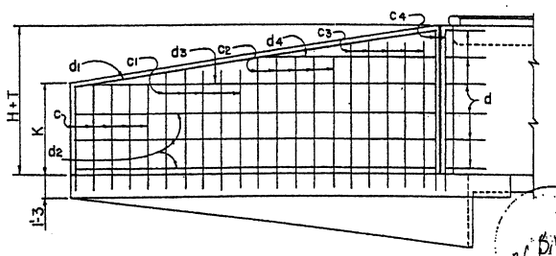

LONG WING ELEVATION
(Back Face Reinf.)

NOTE:
See Std. CM-1 for general notes and miscellaneous details.
See Std. CWQ-1 for concrete and steel headwall quantities.

DESIGN	DHY	8-72	NO.	DESCRIPTION OF REVISIONS	MADE BY	DATE
DRAWN	CAG	8-72	1	Curb height now 6"	JTW	7-76
CHECKED	NAB	3-73	2			
			3			

DESIGN APPROVED: R.C. Buchli
APPROVED FOR DISTRIBUTION: F.D. Lanahan

STATE OF ARIZONA
DEPARTMENT OF TRANSPORTATION
DIVISION OF HIGHWAYS
STANDARD DRAWINGS

INLET OR OUTLET WINGS
30° SKEW CULVERT
6:1 SLOPE, HEIGHT 3' TO 7'

REVISION 7-76
STANDARD NO. CW6-5
DRAWING NO. B-5.05

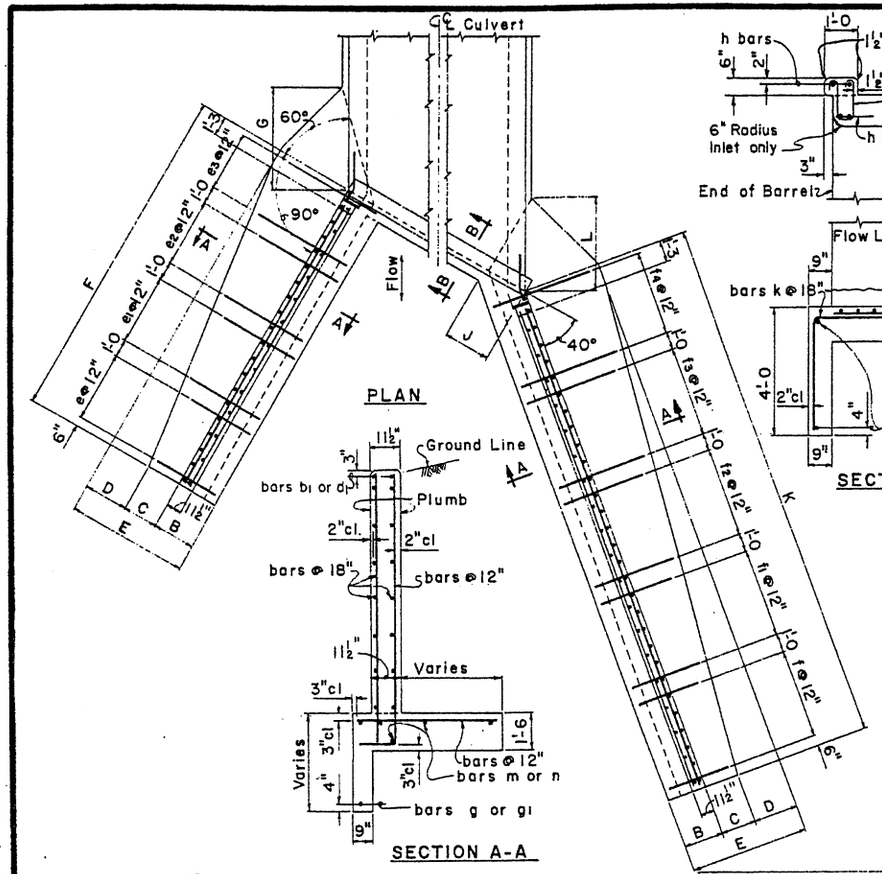

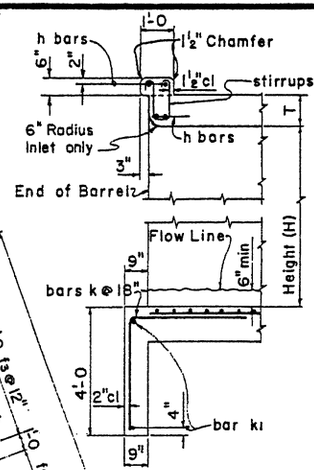

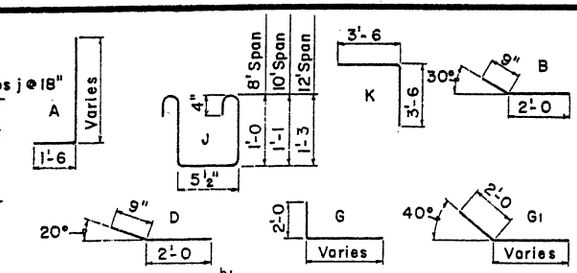

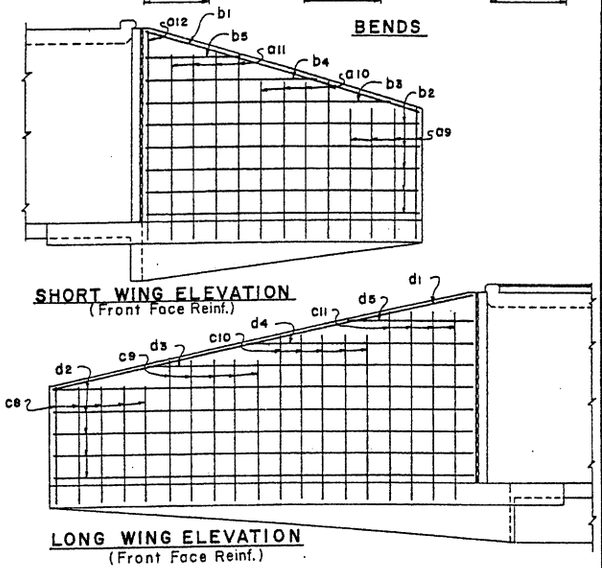

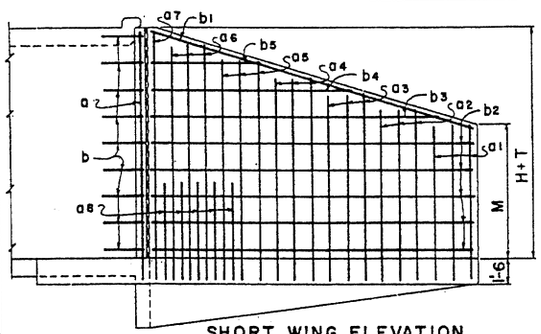

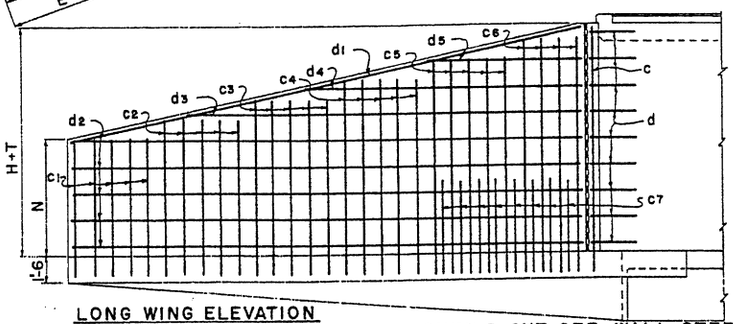

INLET OR OUTLET WINGS STEEL LIST

Mark	Bend	8' Height			9' Height			10' Height			11' Height			12' Height		
		No	Size	Lgth	No	Size	Lgth	No	Size	Lgth	No	Size	Lgth	No	Size	Lgth
SHORT WING																
a	A	1	#6	11'-3	1	#6	12'-3	1	#7	13'-3	1	#7	14'-3	1	#7	15'-3
a1	✓	3	#5	8'-0	3	#5	8'-3	3	#5	8'-9	3	#5	9'-0	3	#5	9'-3
a2	✓	3	✓	8'-9	3	✓	9'-0	3	✓	9'-6	3	✓	10'-0	3	✓	10'-3
a3	✓	3	✓	9'-6	3	✓	10'-0	3	✓	10'-6	3	#6	11'-0	3	#6	11'-3
a4	✓	3	✓	10'-3	3	#6	10'-9	3	#6	11'-3	3	#7	12'-0	3	#7	12'-3
a5	✓	3	#6	11'-0	3	✓	11'-6	3	#7	12'-3	3	✓	12'-9	3	✓	13'-3
a6	✓				1	✓	12'-3	2	✓	13'-0	3	✓	13'-9	3	✓	14'-3
a7	✓													1	✓	15'-3
a8	✓										3	#5	6'-3	5	#5	6'-9
a9	str	4	#4	6'-3	4	#4	6'-9	4	#4	7'-3	4	#4	7'-6	4	#4	7'-9
a10	✓	4	✓	7'-9	4	✓	8'-6	4	✓	9'-0	4	✓	9'-6	4	✓	9'-9
a11	✓	2	✓	9'-3	3	✓	10'-0	3	✓	10'-9	4	✓	11'-3	4	✓	11'-9
a12	✓													1	✓	13'-9
b	B	6	#4	2'-9	7	#4	2'-9	7	#4	2'-9	8	#4	2'-9	9	✓	2'-9
b1	str	2	#6	14'-6	2	#6	15'-9	2	#6	16'-9	2	#6	18'-0	2	#6	19'-3
b2	✓	8	#4	14'-3	8	#4	15'-3	8	#4	16'-3	8	#4	17'-3	8	#4	18'-3
b3	✓	2	✓	7'-9	2	✓	10'-9	2	✓	13'-6	2	✓	15'-9	2	✓	17'-6
b4	✓				2	✓	5'-3	2	✓	8'-3	2	✓	11'-0	2	✓	13'-3
b5	✓										2	✓	6'-3	2	✓	8'-9
e	✓	4	#4	2'-9	5	#4	3'-0	5	#4	3'-3	5	✓	3'-3	5	✓	3'-3
e1	✓	4	✓	3'-0	4	✓	3'-6	5	✓	3'-9	5	#5	4'-0	5	#5	4'-0
e2	✓	4	✓	3'-9	4	✓	4'-0	4	#5	4'-6	5	#6	4'-9	5	#6	5'-0
e3	✓	4	✓	4'-0	4	#5	4'-6	4	#6	5'-0	4	✓	5'-6	5	#7	5'-9
g	G	1	✓	17'-0	1	#4	18'-0	1	#4	19'-0	1	#4	20'-0	1	#4	21'-0
m	str	5	✓	15'-0	5	✓	16'-0	5	✓	17'-0	6	✓	18'-0	6	✓	19'-0
LONG WING																
c	A	1	#6	11'-3	1	#6	12'-3	1	#7	13'-3	1	#7	14'-3	1	#7	15'-3
c1	✓	5	#5	8'-0	5	#5	8'-6	5	#5	8'-9	5	#5	9'-0	5	#5	9'-3
c2	✓	5	✓	8'-9	5	✓	9'-3	5	✓	9'-6	5	✓	10'-0	5	✓	10'-6
c3	✓	5	✓	9'-6	5	✓	10'-0	5	#6	10'-6	5	#6	11'-0	5	#6	11'-6
c4	✓	5	✓	10'-3	5	#6	11'-0	5	✓	11'-6	5	#7	12'-0	5	#7	12'-6
c5	✓	2	#6	11'-3	4	✓	11'-9	5	#7	12'-6	5	✓	13'-0	5	✓	13'-9
c6	✓							1	✓	13'-3	2	✓	14'-0	4	✓	14'-9
c7	✓										4	#5	6'-3	8	#5	6'-9
c8	str	5	#4	6'-6	5	#4	7'-0	5	#4	7'-3	5	#4	7'-6	5	#4	7'-9
c9	✓	5	✓	7'-9	5	✓	8'-3	5	✓	8'-9	5	✓	9'-0	5	✓	9'-6
c10	✓	5	✓	8'-9	4	✓	9'-6	5	✓	10'-0	5	✓	10'-6	5	✓	11'-0
c11	✓				2	✓	10'-9	2	✓	11'-6	3	✓	12'-0	4	✓	12'-9
d	D	6	#4	2'-9	7	✓	2'-9	7	✓	2'-9	8	✓	2'-9	9	✓	2'-9
d1	str	2	#6	22'-0	2	#6	24'-0	2	#6	25'-6	2	#6	27'-3	2	#6	28'-9
d2	✓	8	#4	21'-9	8	#4	23'-9	8	#4	25'-3	8	#4	26'-9	10	#4	28'-3
d3	✓	2	✓	12'-6	2	✓	17'-6	2	✓	21'-3	2	✓	24'-9	2	✓	20'-9
d4	✓				2	✓	8'-9	2	✓	13'-3	2	✓	17'-3	2	✓	13'-9
d5	✓										2	✓	9'-9	2	✓	6'-9
f	✓	5	#4	2'-9	5	#4	3'-0	6	#4	3'-3	6	✓	3'-3	6	✓	3'-3
f1	✓	5	✓	3'-0	5	✓	3'-3	6	✓	3'-9	6	✓	3'-9	6	✓	4'-0
f2	✓	5	✓	3'-6	5	✓	3'-9	5	✓	4'-3	6	#5	4'-3	6	#5	4'-6
f3	✓	4	✓	3'-9	5	#5	4'-0	5	#5	4'-6	5	#6	5'-0	6	#6	5'-3
f4	✓	4	✓	4'-0	5	✓	4'-6	5	#6	5'-0	5	✓	5'-6	6	#7	5'-9
g1	G1	1	✓	26-0	1	#4	28'-0	1	#4	29'-9	1	#4	31'-3	1	#4	32'-9
n	str	5	✓	22'-6	5	✓	24'-6	5	✓	26'-0	6	✓	27'-6	6	✓	29'-0

DIMENSIONS

Height of Opening	B	C	D	E	F	G	J	K	L	M	N
8'	2'-0	1'-3	1'-6	4'-9	15'-6	3'-5	2'-2⅝	23'-0	3'-2	5'-3	5'-5
9'	2'-1	1'-5	1'-9	5'-3	16'-6	4'-0	2'-4⅛	25'-0	3'-9	5'-8	5'-10
10'	2'-2	1'-7	2'-0	5'-9	17'-6	4'-7	2'-5¾	26'-6	4'-3	6'-1	6'-2
11'	2'-3	1'-6	2'-6	6'-3	18'-6	5'-2	2'-7¼	28'-0	4'-10	6'-5	6'-6
12'	2'-4	1'-5	3'-0	6'-9	19'-6	5'-8	2'-8⅞	29'-6	5'-4	6'-7	6'-9

CURB & CUT-OFF WALL STEEL LIST

Mark	Bend	8' Spans					10' Spans					12' Spans				
		1 Barrel			○	◇	1 Barrel			○	◇	1 Barrel			○	◇
		No	Size	Lgth	No	Lgth	No	Size	Lgth	No	Lgth	No	Size	Lgth	No	Lgth
h	str	4	#6	10'-6		10'-1	4	#6	13'-0		12'-6	4	#7	15'-9		15'-0
j	J	7	#4	3'-6	7		9	#4	3'-9	8		10	#4	4'-3	10	
k	K	5	✓	7'-0	6		7	✓	7'-0	8		8	✓	7'-0	9	
k1	str	2	✓	6'-9		10'-1	2	✓	8'-9		12'-6	2	✓	11'-3		15'-0

○ Additional number of bars per each extra barrel.
◇ Additional length of bars per each extra barrel.

NOTE:
See Std. CM-1 for general notes and miscellaneous details.
See Std. CWQ-1 for concrete and steel headwall quantities.

DESIGN	GBW, DHT	8-72	NO.	DESCRIPTION OF REVISIONS	MADE BY	DATE
DRAWN	RWM, APJ	8-72	①	Stirrups - 12' Span	SEA	10-74
CHECKED	WT, NAB	5-73	②	Wing thickness & curb height	JTW	7-76
			③			

DESIGN APPROVED	STATE OF ARIZONA DEPARTMENT OF TRANSPORTATION DIVISION OF HIGHWAYS STANDARD DRAWINGS	REVISION 7-76
APPROVED FOR DISTRIBUTION	INLET OR OUTLET WINGS 30° SKEW CULVERT 6:1 SLOPE, HEIGHT 8' TO 12'	STANDARD NO. CW6-6 DRAWING NO. B-5.06

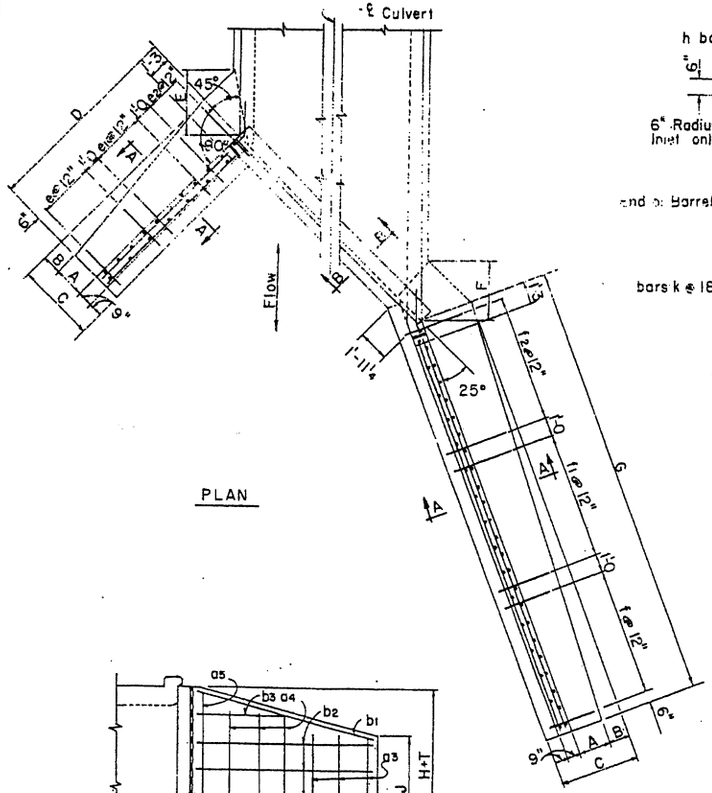

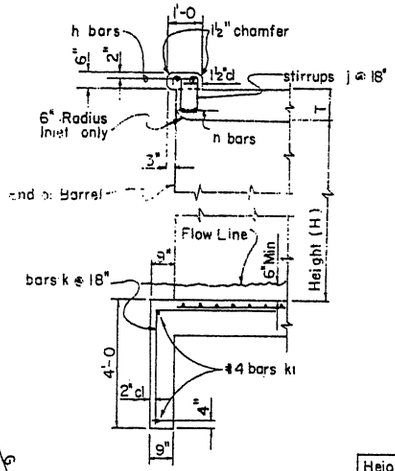

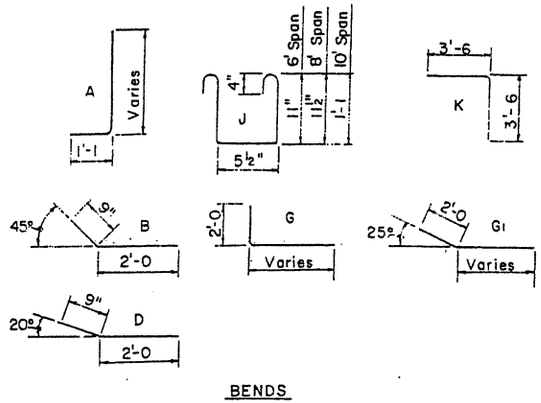

DIMENSIONS

Height of Opening	A	B	C	D	E	F	G	J	K
3'	9"	0	2'-3	6'-0	9"	8"	11'-0	2'-6	2'-9
4'	1'-0	3"	2'-9	7'-6	1'-5	1'-3	14'-6	3'-3	3'-6
5'	1'-4	5"	3'-3	9'-0	2'-2	1'-11	18'-0	4'-1	4'-3
6'	1'-8	7"	3'-9	10'-0	2'-10	2'-7	21'-0	4'-10	5'-0
7'	2'-0	9"	4'-3	11'-0	3'-7	3'-2	24'-0	5'-6	5'-8

INLET OR OUTLET WINGS STEEL LIST

Mark	Bend	3' Height			4' Height			5' Height			6' Height			7' Height		
		No	Size	Lgth	No	Size	Lgth	No	Size	Lgth	No	Size	Lgth	No	Size	Lgth
SHORT WING																
a	A	3	#5	4'-6	3	#5	5'-3	4	#5	6'-0	4	#5	6'-9	4	#5	7'-6
a1	✓	2	✓	5'-3	3	✓	5'-9	4	✓	6'-9	4	✓	7'-6	4	✓	8'-6
a2	✓	2	✓	5'-9	2	✓	6'-9	2	✓	7'-9	3	✓	8'-6	4	✓	9'-3
a3	str	2	#4	3'-3	2	#4	4'-3	3	#4	5'-0	3	#4	5'-9	3	#4	6'-6
a4	✓	2	✓	4'-0	2	✓	4'-9	3	✓	6'-0	3	✓	6'-6	3	✓	7'-6
a5	✓				1	✓	5'-6				1	✓	7'-6	2	✓	8'-6
b	B	3	#4	2'-9	4	✓	2'-9	5	#4	2'-9	5	✓	2'-9	6	✓	2'-9
b1	str	2	#6	5'-3	2	#6	6'-6	2	#6	8'-3	2	#6	9'-3	2	#6	10'-3
b2	✓	4	#4	5'-0	4	#4	6'-3	6	#4	8'-0	6	#4	9'-0	8	#4	10'-0
b3	✓				2	✓	5'-9	2	✓	4'-0	2	✓	8'-3	2	✓	5'-3
e	✓	6	#4	1'-9	8	✓	2'-0	5	✓	2'-3	4	✓	2'-6	4	✓	3'-0
e1	✓							4	✓	2'-6	3	✓	2'-9	4	✓	3'-3
e2	✓										3	✓	3'-0	3	✓	3'-6
g	G	1	#4	8'-0	1	#4	9'-3	1	#4	10'-9	1	✓	11'-9	1	✓	12'-9
m	str	4	✓	5'-6	4	✓	7'-0	4	✓	8'-6	5	✓	9'-6	5	✓	10'-6
LONG WING																
c	A	5	#5	4'-6	5	#5	5'-6	5	#5	6'-0	5	#5	6'-9	5	#5	7'-6
c1	✓	5	✓	5'-3	5	✓	6'-0	5	✓	6'-6	5	✓	7'-3	5	✓	8'-0
c2	✓	2	✓	5'-9	3	✓	6'-6	5	✓	7'-0	5	✓	7'-9	5	✓	8'-6
c3	✓				2	✓	6'-9	4	✓	7'-6	5	✓	8'-3	5	✓	9'-0
c4	✓										2	✓	8'-9	5	✓	9'-3
c5	str	3	#4	3'-6	3	#4	4'-3	4	#4	5'-0	4	#4	5'-9	4	#4	6'-6
c6	✓	3	✓	4'-0	3	✓	4'-9	4	✓	5'-6	4	✓	6'-3	4	✓	7'-0
c7	✓	2	✓	4'-6	4	✓	5'-3	4	✓	6'-3	4	✓	7'-0	4	✓	7'-6
c8	✓										2	✓	7'-6	4	✓	8'-0
d	D	3	#4	2'-9	4	#4	2'-9	5	#4	2'-9	5	✓	2'-9	6	✓	2'-9
d1	str	2	#6	10'-0	2	#6	13'-6	2	#6	17'-0	2	#6	20'-0	2	#6	23'-0
d2	✓	4	#4	10'-0	6	#4	13'-3	6	#4	17'-0	8	#4	20'-0	8	#4	23'-0
d3	✓							2	✓	9'-0				2	✓	13'-6
f	✓	11	#4	1'-9	15	#4	2'-0	9	✓	2'-3	7	#4	2'-6	8	✓	3'-0
f1	✓							9	✓	2'-6	7	✓	2'-9	8	✓	3'-3
f2	✓										7	✓	3'-0	8	✓	3'-6
g1	G1	1	#4	14'-3	1	#4	17'-9	1	#4	21'-3	1	✓	24'-3	1	✓	27'-3
n	str	4	✓	10'-6	4	✓	14'-0	4	✓	17'-6	5	✓	20'-6	5	✓	23'-6

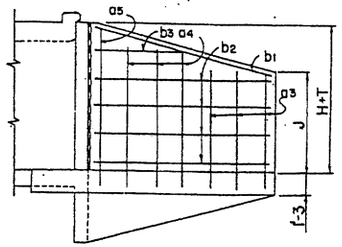

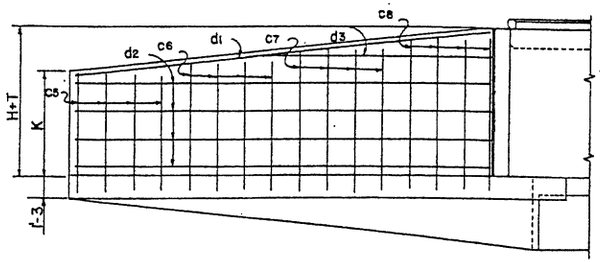

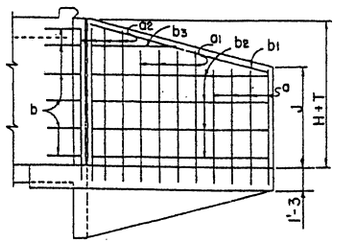

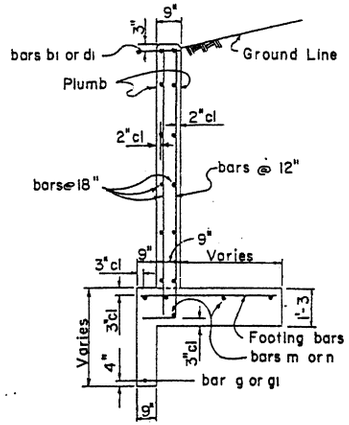

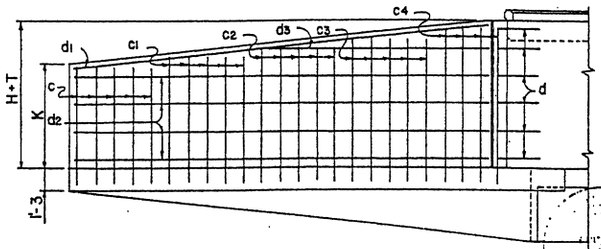

CURB & CUT-OFF WALL STEEL LIST

Mark	Bend	6' Spans					8' Spans					10' Spans				
		1 Barrel			○	◇	1 Barrel			○	◇	1 Barrel			○	◇
		No	Size	Lgth	No	Lgth	No	Size	Lgth	No	Lgth	No	Size	Lgth	No	Lgth
h	str	4	#6	10'-0		9'-6	4	#6	13'-0		12'-4	4	#7	16'-3		15'-4
j	J	7	#4	3'-6	6		9	#4	3'-6	8		11	#4	3'-9	10	
k	K	6	✓	7'-0	6		7	✓	7'-0	8		9	✓	7'-0	10	
k1	str	2	✓	7'-0		9'-6	2	✓	10'-0		12'-4	2	✓	13'-0		15'-4

○ Additional number of bars per each extra barrel.
◇ Additional length of bars per each extra barrel.

NOTE:

See Std. CM-1 for general notes and miscellaneous details.
See Std. CWQ-1 for concrete and steel headwall quantities.

DESIGN APPROVED R.C. Brechler	STATE OF ARIZONA DEPARTMENT OF TRANSPORTATION DIVISION OF HIGHWAYS STANDARD DRAWINGS	REVISION 7-76	
APPROVED FOR DISTRIBUTION	INLET OR OUTLET WINGS 45° SKEW CULVERT 6:1 SLOPE, HEIGHT 3' TO 7'	STANDARD NO. CW6-7 DRAWING NO. B-5.07	

DESIGN	DHY	8-72	NO.	DESCRIPTION OF REVISIONS	MADE BY	DATE
DRAWN	CAG	8-72	①	Skew, Stirrups, Title	STA	10-74
CHECKED	NAB	3-73	②	Curb height now 6"	JTW	7-76
			③			

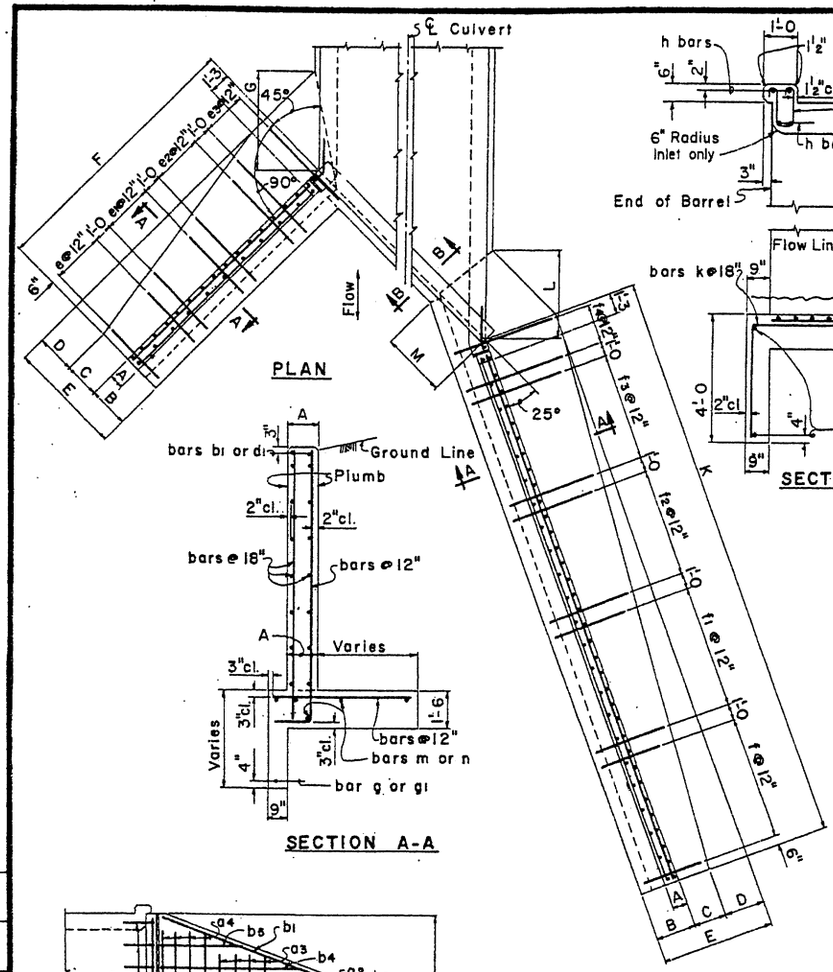

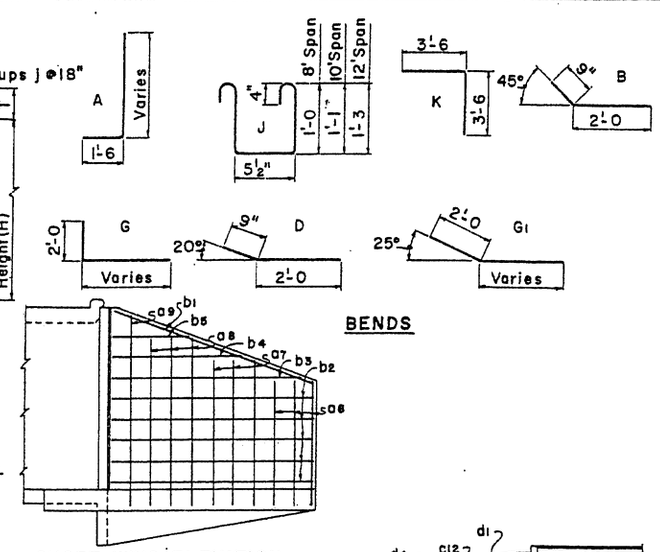

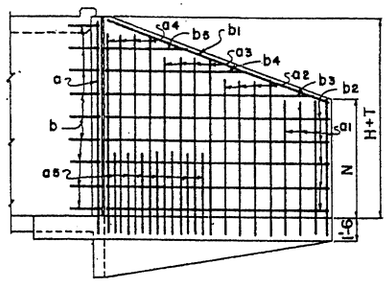

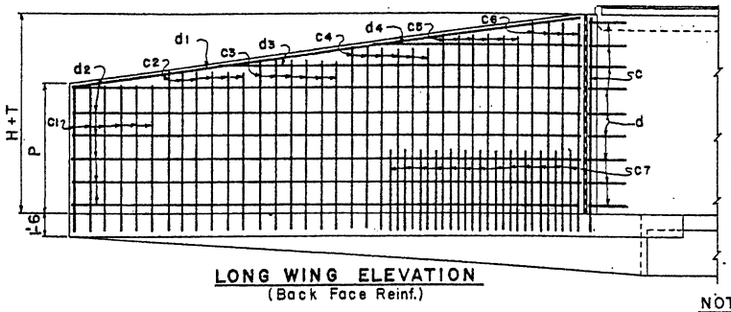

INLET OR OUTLET WINGS STEEL LIST

Mark	Bend	8' Height			9' Height			10' Height			11' Height			12' Height		
		No	Size	Lgth	No	Size	Lgth	No	Size	Lgth	No	Size	Lgth	No	Size	Lgth
SHORT WING																
a	A	1	#6	11'-3	1	#6	12'-3	1	#7	13'-3	1	#7	14'-3	1	#7	15'-3
a1	✓	4	#5	8'-9	4	#5	9'-3	4	#5	9'-9	4	#5	10'-0	4	#6	10'-6
a2	✓	4	✓	9'-9	4	#6	10'-3	4	#6	11'-0	4	#6	11'-6	4	#7	11'-9
a3	✓	3	#6	10'-9	4	✓	11'-6	4	#7	12'-0	4	#7	12'-9	4	✓	13'-3
a4	✓							1	✓	13'-3	2	✓	14'-0	4	✓	14'-6
a5	✓										4	#5	6'-3	7	#5	6'-9
a6	str	3	#4	7'-3	3	#4	7'-9	3	#4	8'-3	3	#4	8'-9	3	#4	9'-0
a7	✓	3	✓	8'-3	3	✓	9'-0	3	✓	9'-6	3	✓	10'-0	3	✓	10'-6
a8	✓	2	✓	9'-6	2	✓	10'-3	3	✓	10'-9	3	✓	11'-6	3	✓	12'-0
a9	✓										1	✓	13'-0	1	✓	13'-6
b	B	6	#4	2'-9	7	#4	2'-9	7	#4	2'-9	8	✓	2'-9	9	✓	2'-9
b1	str	2	#6	11'-0	2	#6	12'-0	2	#6	13'-3	2	#6	14'-3	2	#6	15'-6
b2	✓	8	#4	10'-9	8	#4	11'-9	10	#4	12'-9	10	#4	13'-9	10	#4	14'-9
b3	✓	2	✓	7'-9	2	✓	11'-0	2	✓	8'-3	2	✓	11'-0	2	✓	13'-0
b4	✓				2	✓	5'-6				2	✓	6'-3	2	✓	8'-9
b5	✓													2	✓	4'-3
c	✓	4	#4	3'-0	4	#4	3'-3	4	#4	3'-6	4	#4	3'-9	4	✓	3'-9
c1	✓	4	✓	3'-6	4	✓	3'-9	4	✓	4'-0	4	#5	4'-3	4	#5	4'-3
c2	✓	4	✓	4'-0	3	✓	4'-3	3	#5	4'-6	4	#6	4'-9	4	#6	5'-0
c3	✓				2	#5	4'-9	3	#6	5'-0	3	✓	5'-6	4	#7	5'-6
g	G	1	#4	13'-6	1	#4	14'-6	1	#4	15'-6	1	#4	16'-6	1	#4	17'-6
m	str	5	✓	11'-6	5	✓	12'-6	5	✓	13'-6	6	✓	14'-6	6	✓	15'-6
LONG WING																
c	A	1	#6	11'-3	1	#6	12'-3	1	#7	13'-3	1	#7	14'-3	1	#7	15'-3
c1	✓	6	#5	8'-9	6	#5	9'-6	6	#5	10'-0	6	#5	10'-6	6	#6	11'-0
c2	✓	6	✓	9'-6	6	✓	10'-0	6	#6	10'-9	6	#6	11'-3	6	✓	11'-9
c3	✓	6	✓	10'-0	6	#6	10'-9	6	✓	11'-3	6	✓	12'-0	6	#7	12'-6
c4	✓	6	✓	10'-9	6	✓	11'-6	6	#7	12'-0	6	#7	12'-9	6	✓	13'-3
c5	✓	2	#6	11'-3	4	✓	12'-0	6	✓	12'-9	6	✓	13'-6	6	✓	14'-3
c6	✓										2	✓	14'-3	4	✓	15'-0
c7	✓										6	#5	6'-3	13	#5	6'-9
c8	str	5	#4	7'-3	5	#4	8'-0	5	#4	8'-6	5	#4	9'-0	5	#4	9'-6
c9	✓	5	✓	8'-0	5	✓	8'-9	5	✓	9'-3	5	✓	10'-0	5	✓	10'-6
c10	✓	5	✓	8'-9	5	✓	9'-6	5	✓	10'-3	5	✓	10'-9	5	✓	11'-6
c11	✓	2	✓	9'-6	4	✓	10'-3	5	✓	11'-0	4	✓	11'-9	5	✓	12'-6
c12	✓										2	✓	12'-6	3	✓	13'-6
d	D	6	#4	2'-9	7	#4	2'-9	7	#4	2'-9	8	✓	2'-9	9	✓	2'-9
d1	str	2	#6	25'-3	2	#6	27'-3	2	#6	29'-6	2	#6	31'-6	2	#6	33'-6
d2	✓	8	#4	25'-3	10	#4	27'-3	10	#4	29'-3	10	#4	31'-3	12	#4	33'-3
d3	✓	2	✓	19'-0	2	✓	13'-3	2	✓	21'-0	2	✓	27'-6	2	✓	21'-9
d4	✓							2	✓	8'-0	2	✓	15'-6	2	✓	10'-9
f	✓	8	#4	3'-0	8	#4	3'-3	8	#4	3'-6	8	✓	3'-9	8	✓	4'-0
f1	✓	8	✓	3'-3	8	✓	3'-6	8	✓	3'-9	8	✓	4'-3	8	#5	4'-6
f2	✓	8	✓	3'-9	8	✓	4'-0	8	#5	4'-6	8	#5	4'-9	8	#6	5'-0
f3	✓	3	✓	4'-3	5	#5	4'-6	7	#6	4'-9	5	#6	5'-3	8	#7	5'-6
f4	✓										4	✓	5'-6	3	✓	6'-0
g1	G1	1	#4	30'-9	1	#4	33'-0	1	#4	35'-3	1	#4	37'-3	1	#4	39'-6
n	str	5	✓	26'-0	5	✓	28'-0	5	✓	30'-0	6	✓	32'-0	6	✓	34'-0

DIMENSIONS

Height of Opening	A	B	C	D	E	F	G	K	L	M	N	P
8'	11½"	2'-0	1'-6	1'-3	4'-9	12'-0	3'-7	26'-6	3'-2	3'-1½	6'-1	6'-3
9'	11½"	2'-1	1'-8	1'-6	5'-3	13'-0	4'-2	28'-6	3'-9	3'-3⅞	6'-8	6'-11
10'	11½"	2'-2	1'-10	1'-9	5'-9	14'-0	4'-9	30'-6	4'-3	3'-6¼	7'-1	7'-5
11'	11½"	2'-3	2'-0	2'-0	6'-3	15'-0	5'-4	32'-6	4'-10	3'-8⅝	7'-6	7'-11
12'	11½"	2'-4	2'-2	2'-3	6'-9	16'-0	5'-11	34'-6	5'-4	3'-11	7'-10	8'-4

CURB & CUT-OFF WALL STEEL LIST

Mark	Bend	8' Spans					10' Spans					12' Spans				
		1 Barrel			○	◇	1 Barrel			○	◇	1 Barrel			○	◇
		No	Size	Lgth	No	Lgth	No	Size	Lgth	No	Lgth	No	Size	Lgth	No	Lgth
h	str	4	#6	13'-0		12'-4	4	#7	16'-3		15'-4	4	#9	19'-3		18'-5
j	J	9	#4	3'-6	8		11	#4	3'-9	10		13	#4	4'-3	12	
k	K	6	✓	7'-0	8		8	✓	7'-0	10		9	✓	7'-0	12	
k1	str	2	✓	8'-3		12'-4	2	✓	10'-9		15'-4	2	✓	13'-6		18'-5

○ Additional number of bars per each extra barrel.
◇ Additional length of bars per each extra barrel.

NOTE:
See Std. CM-1 for general notes and miscellaneous details.
See Std. CWQ-1 for concrete and steel headwall quantities.

NO.	DESCRIPTION OF REVISIONS	MADE BY	DATE
1	Stirrups-12' span, Steel List Title	SEA	10-74
2	Wing thickness & curb height	JTW	7-76

DESIGN	CDW, DHY	8-72
DRAWN	RWM, ADV	8-72
CHECKED	WT, NAB	3-73

DESIGN APPROVED R.C. Buehler

APPROVED FOR DISTRIBUTION E. R. Sandin

STATE OF ARIZONA
DEPARTMENT OF TRANSPORTATION
DIVISION OF HIGHWAYS
STANDARD DRAWINGS

INLET OR OUTLET WINGS
45° SKEW CULVERT
6:1 SLOPE, HEIGHT 8' TO 12'

REVISION 7-76

STANDARD NO. CW6-8

DRAWING NO. B-5.08

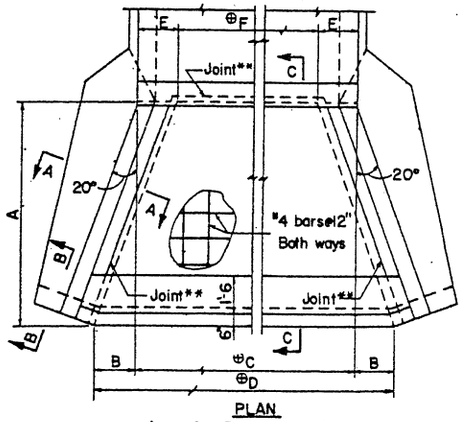

PLAN
Apron for Rt.∢ box culv.

⊕ Dimension varies with number of barrels.

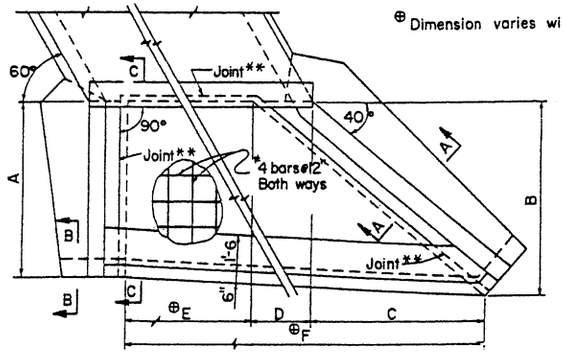

PLAN
Apron for 30° skew box culv.

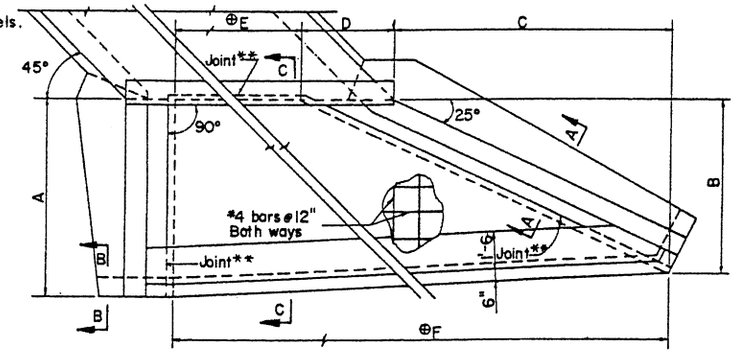

PLAN
Apron for 45° skew box culv.

** Optional construction joint. Apron may be poured with wingwall footings and bottom slab of barrel.

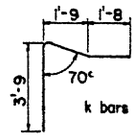

BEND DIAGRAM

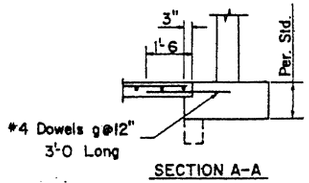

SECTION A-A

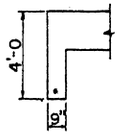

SECTION B-B

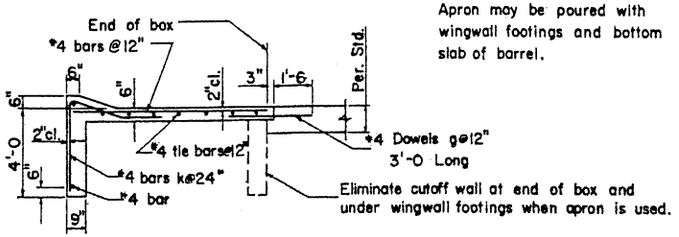

SECTION C-C

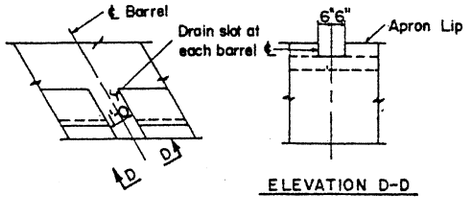

ELEVATION D-D

APRON DRAIN DETAILS

OUTLET APRON QUANTITIES FOR CW2 WINGS

Span	Hgt.	RT. ANGLE Conc. C.Y. 1 Bbl.	2 Bbl.	Δc	Steel lbs. 1 Bbl.	2 Bbl.	Δs	30° SKEW Conc. C.Y. 1 Bbl.	2 Bbl.	Δc	Steel lbs. 1 Bbl.	2 Bbl.	Δs	45° SKEW Conc. C.Y. 1 Bbl.	2 Bbl.	Δc	Steel lbs. 1 Bbl.	2 Bbl.	Δs
6'	3'	.86	1.55	.69	91	151	60	1.27	2.07	.80	120	189	69	1.80	2.75	.95	145	222	77
	4'	1.04	1.84	.80	105	179	74	1.49	2.40	.91	136	215	79	2.23	3.34	1.11	178	267	89
	5'	1.23	2.14	.91	120	202	82	1.71	2.75	1.04	157	241	84	2.68	3.95	1.27	212	313	101
	6'	1.51	2.59	1.08	147	241	94	1.94	3.10	1.16	180	277	97	3.16	4.60	1.44	251	364	113
	7'	1.81	3.07	1.26	188	286	98	2.19	3.48	1.29	205	307	102	3.67	5.27	1.60	284	414	130
8'	3'	1.09	1.99	.90	111	187	76	1.54	2.61	1.07	137	232	95	2.12	3.37	1.25	171	270	99
	4'	1.31	2.37	1.06	132	220	88	1.79	3.01	1.22	160	263	103	2.59	4.06	1.47	209	323	114
	5'	1.53	2.74	1.21	155	253	98	2.06	3.44	1.38	184	300	116	3.10	4.78	1.68	246	377	131
	6'	1.87	3.30	1.43	184	306	122	2.33	3.86	1.53	210	338	128	3.63	5.52	1.89	284	435	151
	7'	2.22	3.89	1.67	222	355	133	2.61	4.32	1.71	233	379	146	4.20	6.30	2.10	327	493	166
	8'	2.52	4.43	1.91	235	383	148	3.22	5.18	1.96	271	435	164	4.76	7.13	2.37	360	544	184
10'	3'	1.32	2.44	1.12	131	230	99	1.80	3.13	1.33	159	271	112	2.44	4.00	1.56	193	318	125
	4'	1.58	2.89	1.31	154	267	113	2.10	3.61	1.51	186	313	127	2.97	4.79	1.82	234	378	144
	5'	1.84	3.34	1.50	180	302	122	2.40	4.11	1.71	213	351	138	3.52	5.61	2.09	276	440	164
	6'	2.23	4.01	1.78	219	365	146	2.71	4.61	1.90	237	400	163	4.11	6.46	2.35	322	506	184
	7'	2.64	4.70	2.06	255	420	165	3.05	5.17	2.12	273	442	169	4.72	7.33	2.61	369	572	203
	8'	3.00	5.38	2.38	275	451	176	3.71	6.15	2.44	315	503	188	5.35	8.28	2.93	402	631	229
	9'	3.41	6.08	2.67	314	528	214	4.16	6.84	2.68	344	556	212	6.04	9.25	3.21	449	693	244
	10'	3.86	7.82	3.96	347	573	226	4.64	7.55	2.91	388	609	221	6.75	10.23	3.48	502	766	264
12'	8'	3.51	6.37	2.86	315	535	220	4.24	7.17	2.93	362	594	232	5.99	9.51	3.52	457	721	264
	9'	3.99	7.20	3.21	359	610	251	4.75	7.96	3.21	392	649	257	6.73	10.59	3.86	503	798	295
	10'	4.50	8.06	3.56	403	670	267	5.27	8.76	3.49	440	713	273	7.50	11.68	4.18	560	872	312
	11'	5.01	8.91	3.90	449	751	302	5.93	9.75	3.82	485	780	295	8.30	12.80	4.50	615	953	338
	12'	5.36	9.50	4.14	481	795	314	6.40	10.59	4.19	532	852	320	9.12	13.95	4.83	668	1036	368

OUTLET APRON QUANTITIES FOR CW6 WINGS

Span	Hgt.	RT. ANGLE Conc. C.Y. 1 Bbl.	2 Bbl.	Δc	Steel lbs. 1 Bbl.	2 Bbl.	Δs	30° SKEW Conc. C.Y. 1 Bbl.	2 Bbl.	Δc	Steel lbs. 1 Bbl.	2 Bbl.	Δs	45° SKEW Conc. C.Y. 1 Bbl.	2 Bbl.	Δc	Steel lbs. 1 Bbl.	2 Bbl.	Δs
6'	3'	1.35	2.38	1.03	145	231	86	1.86	2.97	1.11	170	261	91	2.21	3.32	1.11	178	268	90
	4'	1.86	3.18	1.32	192	299	107	2.50	3.89	1.39	224	336	112	2.98	4.35	1.37	231	335	104
	5'	2.57	4.24	1.67	260	394	134	3.24	4.92	1.68	292	417	125	3.85	5.48	1.63	296	422	126
	6'	3.09	5.00	1.91	315	456	141	3.98	5.88	1.90	357	500	143	4.62	6.45	1.83	352	493	141
	7'	3.68	5.81	2.13	358	531	173	4.52	6.61	2.09	393	557	164	5.43	7.46	2.03	412	564	152
8'	3'	1.69	3.05	1.36	173	288	115	2.23	3.69	1.46	198	317	119	2.57	4.04	1.47	209	323	114
	4'	2.30	4.03	1.73	227	367	140	2.96	4.79	1.83	260	405	145	3.43	5.24	1.81	261	401	140
	5'	3.12	5.31	2.19	303	478	175	3.80	6.00	2.20	332	504	172	4.39	6.54	2.15	339	502	163
	6'	3.72	6.23	2.51	363	561	198	4.60	7.12	2.52	402	599	197	5.22	7.63	2.41	394	581	187
	7'	4.38	7.18	2.80	411	637	226	5.20	7.96	2.76	447	659	212	6.11	8.77	2.66	463	660	197
	8'	4.69	7.75	3.06	445	687	242	5.92	8.96	3.04	504	740	236	6.74	9.69	2.95	519	746	227
10'	3'	2.03	3.72	1.69	200	342	142	2.60	4.41	1.81	232	378	146	2.94	4.76	1.82	234	379	145
	4'	2.73	4.89	2.16	260	429	169	3.42	5.70	2.28	299	480	181	3.88	6.10	2.22	297	466	169
	5'	3.67	6.39	2.72	345	555	210	4.35	7.08	2.73	380	587	207	4.92	7.60	2.68	376	581	205
	6'	4.35	7.45	3.10	410	649	239	5.24	8.12	2.88	457	688	231	5.82	8.81	2.99	441	669	228
	7'	5.08	8.55	3.47	475	736	261	5.89	9.30	3.41	501	766	265	6.77	10.08	3.31	510	757	247
	8'	5.46	9.25	3.79	499	797	298	6.67	10.45	3.78	565	850	285	7.47	11.14	3.67	577	856	279
	9'	5.83	9.82	3.99	529	837	308	7.37	11.42	4.05	612	926	314	8.24	12.18	3.94	608	903	295
	10'	6.19	10.38	4.19	545	860	315	7.97	12.26	4.29	662	987	325	9.03	13.24	4.21	668	974	306
12'	8'	6.29	10.85	4.56	565	912	347	7.49	12.03	4.54	628	979	351	8.28	12.67	4.39	632	968	336
	9'	6.69	11.48	4.79	606	970	364	8.25	13.12	4.87	683	1060	377	9.10	13.82	4.72	676	1024	348
	10'	7.10	12.13	5.03	622	999	377	8.90	14.05	5.15	730	1123	393	9.95	15.00	5.05	731	1108	377
	11'	7.52	12.78	5.26	652	1046	394	9.55	14.97	5.42	786	1203	417	10.83	16.21	5.38	794	1197	403
	12'	7.94	13.44	5.50	686	1093	407	10.20	15.91	5.71	833	1266	433	11.74	17.44	5.70	866	1277	411

NOTES:

The apron quantities take into consideration the cutoff walls being omitted along outlet headwall, and shall be used on new box culverts only

See Std. CM-1 for general notes and miscellaneous detail.

See Std. CWA-2 for Apron Dimensions.

NOTATIONS:

Δc = Amount of concrete to be added for each additional barrel.

Δs = Amount of steel to be added for each additional barrel.

Registered Professional Engineer (Civil) CERTIFICATE EXPIRES DEC. 31, 19 ARIZONA, U.S.A.

DESIGN APPROVED	STATE OF ARIZONA DEPARTMENT OF TRANSPORTATION DIVISION OF HIGHWAYS STANDARD DRAWINGS	REVISION
APPROVED FOR DISTRIBUTION	OUTLET APRONS FOR CW2 AND CW6 WINGS	STANDARD NO. CWA-1
		DRAWING NO. B-6.01

DESIGN	DRAWN	CHECKED
DHT	LAM	MAB
3-73	3-73	3-73

NO.	DESCRIPTION OF REVISIONS	MADE BY	DATE
1			
2			
3			

RT. ANGLE OUTLET APRON FOR CW2 WINGS

Span	Hgt.	Dimensions									
		A	B	C1	C2	D1	D2	E	F1	F2	Δ
6'	3'	5'-2½	0'-3⅝	7'-4	14'-0	7'-11¼	14'-7¼	1'-7⅛	4'-1¾	10'-9¾	6'-8
	4'	6'-1⅞	0'-7¾	7'-4	14'-0	8'-7½	15'-3½	1'-7⅛	4'-1¾	10'-9¾	6'-8
	5'	7'-1⅛	0'-11⅞	7'-4	14'-0	9'-3¾	15'-11¾	1'-7⅛	4'-1¾	10'-9¾	6'-8
	6'	8'-6	1'-6	7'-4	14'-0	10'-4	17'-0	1'-7⅛	4'-1¾	10'-9¾	6'-8
	7'	9'-10⅞	2'-0⅛	7'-4	14'-0	11'-4¼	18'-0¼	1'-7⅛	4'-1¾	10'-9¾	6'-8
8'	3'	5'-2½	0'-3⅝	9'-6	18'-3	10'-1¼	18'-10¼	1'-7⅛	6'-3¾	15'-0¾	8'-9
	4'	6'-1⅞	0'-7¾	9'-6	18'-3	10'-9½	19'-6½	1'-7⅛	6'-3¾	15'-0¾	8'-9
	5'	7'-1⅛	0'-11⅞	9'-6	18'-3	11'-5¾	20'-2¾	1'-7⅛	6'-3¾	15'-0¾	8'-9
	6'	8'-6	1'-6	9'-6	18'-3	12'-6	21'-3	1'-7⅛	6'-3¾	15'-0¾	8'-9
	7'	9'-10⅞	2'-0⅛	9'-6	18'-3	13'-6¼	22'-3¼	1'-7⅛	6'-3¾	15'-0¾	8'-9
	8'	11'-5⅞	2'-0⅝	9'-6	18'-3	13'-7¼	22'-4¼	2'-1½	5'-3	14'-0	8'-9
10'	3'	5'-2½	0'-3⅝	11'-8	22'-6	12'-3¼	23'-1¼	1'-7⅛	8'-5¾	19'-3¾	10'-10
	4'	6'-1⅞	0'-7¾	11'-8	22'-6	12'-11½	23'-9½	1'-7⅛	8'-5¾	19'-3¾	10'-10
	5'	7'-1⅛	0'-11⅞	11'-8	22'-6	13'-7¾	24'-5¾	1'-7⅛	8'-5¾	19'-3¾	10'-10
	6'	8'-6	1'-6	11'-8	22'-6	14'-8	25'-6	1'-7⅛	8'-5¾	19'-3¾	10'-10
	7'	9'-10⅞	2'-0⅛	11'-8	22'-6	15'-8¼	26'-6¼	1'-7⅛	8'-5¾	19'-3¾	10'-10
	8'	11'-5⅞	2'-0⅝	11'-8	22'-6	15'-9¼	26'-7¼	2'-1½	7'-5	18'-3	10'-10
	9'	12'-11⅛	2'-5⅞	11'-8	22'-6	16'-7¾	27'-5¾	2'-2⅝	7'-2¾	18'-0¾	10'-10
	10'	14'-4⅜	2'-11⅛	11'-8	22'-6	17'-6¼	28'-4¼	2'-3¾	7'-0¾	17'-10¾	10'-10
12'	8'	11'-5⅞	2'-0⅝	14'-0	27'-0	18'-1¼	31'-1¼	2'-1½	9'-9	22'-9	13'-0
	9'	12'-11⅛	2'-5⅞	14'-0	27'-0	18'-11¾	31'-11¾	2'-2⅝	9'-6¾	22'-6¾	13'-0
	10'	14'-4⅜	2'-11⅛	14'-0	27'-0	19'-10¼	32'-10¼	2'-3¾	9'-4½	22'-4½	13'-0
	11'	15'-9⅝	3'-4¼	14'-0	27'-0	20'-8½	33'-8½	2'-4¾	9'-2½	22'-2½	13'-0
	12'	16'-9¼	3'-7½	14'-0	27'-0	21'-3	34'-3	2'-5¾	9'-0½	22'-0½	13'-0

30° SKEW OUTLET APRON FOR CW2 WINGS

Span	Hgt.	Dimensions								
		A	B	C	D	E1	E2	F1	F2	Δ
6'	3'	5'-0	5'-7¾	4'-4¾	2'-4	4'-7⅝	12'-4	11'-4⅜	19'-0¾	7'-8⅜
	4'	6'-0	6'-3½	5'-2	2'-4	4'-7⅝	12'-4	12'-1⅝	19'-10	7'-8⅜
	5'	7'-0	6'-11¼	5'-11⅛	2'-4	4'-7⅝	12'-4	12'-10¾	20'-7⅛	7'-8⅜
	6'	8'-0	7'-6⅞	6'-8⅜	2'-4	4'-7⅝	12'-4	13'-8	21'-4⅜	7'-8⅜
	7'	9'-0	8'-6½	7'-5½	2'-4	4'-7⅝	12'-4	14'-5⅛	22'-1½	7'-8⅜
8'	3'	5'-0	5'-7¾	4'-4¾	2'-4	7'-1⅝	17'-2⅞	13'-10⅜	23'-11⅝	10'-1¼
	4'	6'-0	6'-3½	5'-2	2'-4	7'-1⅝	17'-2⅞	14'-7⅝	24'-8⅞	10'-1¼
	5'	7'-0	6'-11¼	5'-11⅛	2'-4	7'-1⅝	17'-2⅞	15'-4¾	25'-6	10'-1¼
	6'	8'-0	7'-6⅞	6'-8⅜	2'-4	7'-1⅝	17'-2⅞	16'-2	26'-3¼	10'-1¼
	7'	9'-0	8'-6½	7'-5½	2'-4	7'-1⅝	17'-2⅞	16'-11⅛	27'-0⅜	10'-1¼
	8'	10'-0	10'-2½	9'-0⅝	3'-1⅜	6'-4¼	16'-5½	18'-6¼	28'-7½	10'-1¼
10'	3'	5'-0	5'-7¾	4'-4¾	2'-4	9'-7⅝	22'-1¾	16'-4⅜	28'-10½	12'-6⅛
	4'	6'-0	6'-3½	5'-2	2'-4	9'-7⅝	22'-1¾	17'-1⅝	29'-7¾	12'-6⅛
	5'	7'-0	6'-11¼	5'-11⅛	2'-4	9'-7⅝	22'-1¾	17'-10¾	30'-4⅞	12'-6⅛
	6'	8'-0	7'-6⅞	6'-8⅜	2'-4	9'-7⅝	22'-1¾	18'-8	31'-2⅛	12'-6⅛
	7'	9'-0	8'-6½	7'-5½	2'-4	9'-7⅝	22'-1¾	19'-5⅛	31'-11¼	12'-6⅛
	8'	10'-0	10'-2½	9'-0⅝	3'-1⅜	8'-10¼	21'-4⅜	21'-0¼	33'-6⅜	12'-6⅛
	9'	11'-0	11'-2⅞	10'-1¾	3'-2⅞	8'-8¾	21'-2⅞	22'-1⅜	34'-7½	12'-6⅛
	10'	12'-0	12'-3¼	11'-3	3'-4½	8'-7⅛	21'-1¼	23'-2⅝	35'-8¾	12'-6⅛
12'	8'	10'-0	10'-2½	9'-0⅝	3'-1⅜	11'-6⅝	26'-6¾	23'-8⅝	38'-8¾	15'-0⅛
	9'	11'-0	11'-2⅞	10'-1¾	3'-2⅞	11'-5⅛	26'-5¼	24'-9¾	39'-9⅞	15'-0⅛
	10'	12'-0	12'-3¼	11'-3	3'-4½	11'-3½	26'-3⅝	25'-11	40'-11⅛	15'-0⅛
	11'	13'-0	13'-7⅜	12'-8¾	3'-6	11'-2	26'-2⅛	27'-4¾	42'-4⅞	15'-0⅛
	12'	14'-0	14'-7¾	13'-9⅞	3'-7½	11'-0½	26'-0⅝	28'-5⅞	43'-6	15'-0⅛

45° SKEW OUTLET APRON FOR CW2 WINGS

Span	Hgt.	Dimensions								
		A	B	C	D	E1	E2	F1	F2	Δ
6'	3'	5'-0	5'-2	7'-6¼	3'-6⅝	5'-3⅞	14'-9	16'-4¾	25'-9⅞	9'-5⅛
	4'	6'-0	6'-0⅛	9'-4	3'-6⅝	5'-3⅞	14'-9	18'-2½	27'-7⅝	9'-5⅛
	5'	7'-0	6'-10¼	11'-1¾	3'-6⅝	5'-3⅞	14'-9	20'-0¼	29'-5⅜	9'-5⅛
	6'	8'-0	7'-8⅜	12'-11½	3'-6⅝	5'-3⅞	14'-9	21'-10	31'-3⅛	9'-5⅛
	7'	9'-0	8'-6½	14'-9¼	3'-6⅝	5'-3⅞	14'-9	23'-7¾	33'-0⅞	9'-5⅛
8'	3'	5'-0	5'-2	7'-6¼	3'-6⅝	8'-4⅝	20'-9⅛	19'-5½	31'-10	12'-4½
	4'	6'-0	6'-0⅛	9'-4	3'-6⅝	8'-4⅝	20'-9⅛	21'-3¼	33'-7¾	12'-4½
	5'	7'-0	6'-10¼	11'-1¾	3'-6⅝	8'-4⅝	20'-9⅛	23'-1	35'-5½	12'-4½
	6'	8'-0	7'-8⅜	12'-11½	3'-6⅝	8'-4⅝	20'-9⅛	24'-10¾	37'-3¼	12'-4½
	7'	9'-0	8'-6½	14'-9¼	3'-6⅝	8'-4⅝	20'-9⅛	26'-8½	39'-1	12'-4½
	8'	10'-0	9'-10⅛	16'-4½	4'-8¾	6'-8½	19'-1	27'-9¾	40'-2¼	12'-4½
10'	3'	5'-0	5'-2	7'-6¼	3'-6⅝	11'-5⅜	26'-9¼	22'-6¼	37'-10⅛	15'-3⅞
	4'	6'-0	6'-0⅛	9'-4	3'-6⅝	11'-5⅜	26'-9¼	24'-4	39'-7⅞	15'-3⅞
	5'	7'-0	6'-10¼	11'-1¾	3'-6⅝	11'-5⅜	26'-9¼	26'-1¾	41'-5⅝	15'-3⅞
	6'	8'-0	7'-8⅜	12'-11½	3'-6⅝	11'-5⅜	26'-9¼	27'-11½	43'-3⅜	15'-3⅞
	7	9'-0	8'-6½	14'-9¼	3'-6⅝	11'-5⅜	26'-9¼	29'-9¼	45'-1⅛	15'-3⅞
	8'	10'-0	9'-10⅛	16'-4½	4'-8¾	9'-9¼	25'-1⅛	30'-10½	46'-2⅜	15'-3⅞
	9'	11'-0	10'-9⅛	18'-1⅞	4'-11⅛	9'-5⅞	24'-9¾	32'-6⅞	47'-10¾	15'-3⅞
	10'	12'-0	11'-8¼	19'-11⅛	5'-1½	9'-2½	24'-6⅜	34'-3⅛	49'-7	15'-3⅞
12'	8'	10'-0	9'-10⅛	16'-4½	4'-8¾	13'-0⅞	31'-5½	34'-2⅛	52'-6¾	18'-4⅝
	9'	11'-0	10'-9⅛	18'-1⅞	4'-11⅛	12'-9½	31'-2⅛	35'-10½	54'-3⅛	18'-4⅝
	10'	12'-0	11'-8¼	19'-11⅛	5'-1½	12'-6⅛	30'-10¾	37'-6¾	55'-11⅜	18'-4⅝
	11'	13'-0	12'-7¼	21'-8½	5'-3⅞	12'-2¾	30'-7⅜	39'-3⅛	57'-7¾	18'-4⅝
	12'	14'-0	13'-6¼	23'-5⅜	5'-6¼	11'-11⅜	30-4	40'-11⅜	59'-4	18-4⅝

RT. ANGLE OUTLET APRON FOR CW6 WINGS

Span	Hgt.	Dimensions									
		A	B	C1	C2	D1	D2	E	F1	F2	Δ
6'	3'	8'-0⅜	1'-3⅞	7'-4	14'-0	9'-11⅞	16'-7⅞	1'-7⅛	4'-1¾	10'-9¾	6'-8
	4'	10'-4½	2'-2⅛	7'-4	14'-0	11'-8⅜	18'-4⅜	1'-7⅛	4'-1¾	10'-9¾	6'-8
	5'	13'-2⅜	3'-2½	7'-4	14'-0	13'-9	20'-5	1'-7⅛	4'-1¾	10'-9¾	6'-8
	6'	15'-1	3'-10¾	7'-4	14'-0	15'-1⅜	21'-9⅜	1'-7⅛	4'-1¾	10'-9¾	6'-8
	7'	16'-11½	4'-6⅞	7'-4	14'-0	16'-5⅞	23'-1⅞	1'-7⅛	4'-1¾	10'-9¾	6'-8
8'	3'	8'-0⅜	1'-3⅞	9'-6	18'-3	12'-1¾	20'-10¾	1'-7⅛	6'-3¾	15'-0¾	8'-9
	4'	10'-4½	2'-2⅛	9'-6	18'-3	13'-10¼	22'-7¼	1'-7⅛	6'-3¾	15'-0¾	8'-9
	5'	13'-2⅜	3'-2½	9'-6	18'-3	15'-11	24'-8	1'-7⅛	6'-3¾	15'-0¾	8'-9
	6'	15'-1	3'-10¾	9'-6	18'-3	17'-3½	26'-0½	1'-7⅛	6'-3¾	15'-0¾	8'-9
	7'	16'-11½	4'-6⅞	9'-6	18'-3	18'-7¾	27'-4¾	1'-7⅛	6'-3¾	15'-0¾	8'-9
	8'	18'-6½	4'-7¾	9'-6	18'-3	18'-8¾	27'-5¾	2'-1½	5'-3	14'-0	8'-9
10'	3'	8'-0⅜	1'-3⅞	11'-8	22'-6	14'-3¾	25'-1¾	1'-7⅛	8'-5¾	19'-3¾	10'-10
	4'	10'-4½	2'-2⅛	11'-8	22'-6	16'-0¼	26'-10¼	1'-7⅛	8'-5¾	19'-3¾	10'-10
	5'	13'-2⅜	3'-2½	11'-8	22'-6	18'-1	28'-11	1'-7⅛	8'-5¾	19'-3¾	10'-10
	6'	15'-1	3'-10¾	11'-8	22'-6	19'-5½	30'-3½	1'-7⅛	8'-5¾	19'-3¾	10'-10
	7'	16'-11½	4'-6⅞	11'-8	22'-6	20'-9¾	31'-7¾	1'-7⅛	8'-5¾	19'-3¾	10'-10
	8'	18'-6½	4'-7¾	11'-8	22'-6	20'-10¾	31'-8¾	2'-1½	7'-5	18'-3	10'-10
	9'	19'-6⅛	4'-10⅝	11'-8	22'-6	21'-5¼	32'-3¼	2'-2⅝	7'-2¾	18'-0¾	10'-10
	10'	20'-5¾	5'-1¾	11'-8	22'-6	21'-11½	32'-9½	2'-3¾	7'-0½	17'-10½	10'-10
12'	8'	18'-6½	4'-7¾	14'-0	27'-0	23'-2¾	36'-2¾	2'-1½	9'-9	22'-9	13'-0
	9'	19'-6⅛	4'-10⅝	14'-0	27'-0	23'-9¼	36'-9¼	2'-2⅝	9'-6¾	22'-6¾	13'-0
	10'	20'-5¾	5'-1¾	14'-0	27'-0	24'-3½	37'-3½	2'-3¾	9'-4½	22'-4½	13'-0
	11'	21'-5⅜	5'-4⅞	14'-0	27'-0	24'-9¾	37'-9¾	2'-4¾	9'-2½	22'-2½	13'-0
	12'	22'-5	5'-8⅛	14'-0	27'-0	25'-4¼	38'-4½	2'-5¾	9'-0½	22'-0½	13'-0

30° SKEW OUTLET APRON FOR CW6 WINGS

Span	Hgt.	Dimensions								
		A	B	C	D	E1	E2	F1	F2	Δ
6'	3'	7'-0	7'-10¾	7'-1	2'-4	4'-7⅝	12'-4	14'-0½	21'-9	7'-8⅜
	4'	9'-0	9'-9⅞	9'-4½	2'-4	4'-7⅝	12'-4	16'-4⅛	24'-0½	7'-8⅜
	5'	11'-0	11'-9	11'-8⅛	2'-4	4'-7⅝	12'-4	18'-7¾	26'-4⅛	7'-8⅜
	6'	12'-6	13'-8¼	13'-11⅝	2'-4	4'-7⅝	12'-4	20'-11¼	28'-7⅝	7'-8⅜
	7'	14'-0	14'-7¾	15'-1½	2'-4	4'-7⅝	12'-4	22'-1⅛	29'-9½	7'-8⅜
8'	3'	7'-0	7'-10¾	7'-1	2'-4	7'-1⅝	17'-2⅞	16'-6⅝	26'-7⅞	10'-1¼
	4'	9'-0	9'-9⅞	9'-4½	2'-4	7'-1⅝	17'-2⅞	18'-10⅛	28'-11⅜	10'-1¼
	5'	11'-0	11'-9	11'-8⅛	2'-4	7'-1⅝	17'-2⅞	21'-1¾	31'-3	10'-1¼
	6'	12'-6	13'-8¼	13'-11⅝	2'-4	7'-1⅝	17'-2⅞	23'-5¼	33'-6½	10'-1¼
	7'	14'-0	14'-7¾	15'-1½	2'-4	7'-1⅝	17'-2⅞	24'-7⅛	34'-8⅜	10'-1¼
	8'	15'-6	16'-3¾	16'-4	3'-1⅜	6'-4¼	16'-5½	25'-9⅝	35'-10⅞	10'-1¼
10'	3'	7'-0	7'-10¾	7'-1	2'-4	9'-7⅝	22'-1¾	19'-0⅝	31'-6¾	12'-6⅛
	4'	9'-0	9'-9⅞	9'-4½	2'-4	9'-7⅝	22'-1¾	21'-4⅛	33'-10¼	12'-6⅛
	5'	11'-0	11'-9	11'-8⅛	2'-4	9'-7⅝	22'-1¾	23'-7¾	36'-1⅞	12'-6⅛
	6'	12'-6	13'-8¼	13'-11⅝	2'-4	9'-7⅝	22'-1¾	25'-11¼	37'-5⅜	12'-6⅛
	7'	14'-0	14'-7¾	15'-1½	2'-4	9'-7⅝	22'-1¾	27'-1⅛	39'-7¼	12'-6⅛
	8'	15'-6	16'-3¾	16'-4	3'-1⅜	8'-10¼	21'-4⅜	28'-3⅝	40'-9¾	12'-6⅛
	9'	16'-6	17'-8	17'-9¾	3'-2⅞	8'-8¾	21'-2⅞	29'-9⅜	42'-3½	12'-6⅛
	10'	17'-6	18'-8⅜	18'-10⅞	3'-4½	8'-7⅛	21'-1¼	30'-10½	43'-4⅝	12'-6⅛
12'	8'	15'-6	16'-3¾	16'-4	3'-1⅜	11'-6⅝	26'-6¾	31'-0	46'-0⅛	15'-0⅛
	9'	16'-6	17'-8	17'-9¾	3'-2⅞	11'-5⅛	26'-5¼	32'-5¾	47'-5⅞	15'-0⅛
	10'	17'-6	18'-8⅜	18'-10⅞	3'-4½	11'-3½	26'-3⅝	33'-6⅞	48'-7	15'-0⅛
	11'	18'-6	19'-8⅝	20'-0	3'-6	11'-2	26'-2⅛	34'-8	49'-8⅛	15'-0⅛
	12'	19'-6	20'-9	21'-1⅛	3'-7½	11'-0½	26'-0⅝	35'-9⅛	50'-9¼	15'-0⅛

45° SKEW OUTLET APRON FOR CW6 WINGS

Span	Hgt.	Dimensions								
		A	B	C	D	E1	E2	F1	F2	Δ
6'	3'	6'-0	6'-0⅛	9'-4	3'-6⅝	5'-3⅞	14'-9	18'-2½	27'-7⅝	9'-5⅛
	4'	7'-6	7'-5⅞	12'-6⅛	3'-6⅝	5'-3⅞	14'-9	21'-4⅝	30'-9¾	9'-5⅛
	5'	9'-0	8'-11⅝	15'-8⅛	3'-6⅝	5'-3⅞	14'-9	24'-6⅝	33'-11¾	9'-5⅛
	6'	10'-0	10'-2⅞	18'-4¾	3'-6⅝	5'-3⅞	14'-9	27'-3¼	36'-8⅜	9'-5⅛
	7'	11'-0	11'-6	21'-1⅜	3'-6⅝	5'-3⅞	14'-9	29'-11⅞	39'-5	9'-5⅛
8'	3'	6'-0	6'-0⅛	9'-4	3'-6⅝	8'-4⅝	20'-9⅛	21'-3¼	33'-7¾	12'-4½
	4'	7'-6	7'-5⅞	12'-6⅛	3'-6⅝	8'-4⅝	20'-9⅛	24'-5⅜	36'-9⅞	12'-4½
	5'	9'-0	8'-11⅝	15'-8⅛	3'-6⅝	8'-4⅝	20'-9⅛	27'-7⅜	39'-11⅞	12'-4½
	6'	10'-0	10'-2⅞	18'-4¾	3'-6⅝	8'-4⅝	20'-9⅛	30'-4	42'-8½	12'-4½
	7'	11'-0	11'-6	21'-1⅜	3'-6⅝	8'-4⅝	20'-9⅛	33'-0⅝	45'-5⅛	12'-4½
	8'	12'-0	13'-0⅛	23'-2⅛	4'-8¾	6'-8½	19'-1	34'-7⅜	46'-11⅞	12'-4½
10'	3'	6'-0	6'-0⅛	9'-4	3'-6⅝	11'-5⅜	26'-9¼	24'-4	39'-7⅞	15'-3⅞
	4'	7'-6	7'-5⅞	12'-6⅛	3'-6⅝	11'-5⅜	26'-9¼	27'-6⅛	42'-10	15'-3⅞
	5'	9'-0	8'-11⅝	15'-8⅛	3'-6⅝	11'-5⅜	26'-9¼	30'-8⅛	46'-0	15'-3⅞
	6'	10'-0	10'-2⅞	18'-4¾	3'-6⅝	11'-5⅜	26'-9¼	33'-4¾	48'-8⅝	15'-3⅞
	7'	11'-0	11'-6	21'-1⅜	3'-6⅝	11'-5⅜	26'-9¼	36'-1⅜	51'-5¼	15'-3⅞
	8'	12'-0	13'-0⅛	23'-2⅛	4'-8¾	9'-9¼	25'-1⅛	37'-8⅛	53'-0	15'-3⅞
	9'	13'-0	13'-11¼	24'-11⅜	4'-11⅛	9'-5⅞	24'-9¾	39'-4⅜	54'-8¼	15'-3⅞
	10'	14'-0	14'-10¼	26'-8¾	5'-1½	9'-2½	24'-6⅜	41'-0¾	56'-4¾	15'-3⅞
12'	8'	12'-0	13'-0⅛	23'-2⅛	4'-8¾	13'-0⅞	31'-5½	40'-11¾	59'-4⅜	18'-4⅝
	9'	13'-0	13'-11¼	24'-11⅜	4'-11⅛	12'-9½	31'-2⅛	42'-8	61'-0⅝	18'-4⅝
	10'	14'-0	14'-10¼	26'-8¾	5'-1½	12'-6⅛	30'-10¾	44'-4⅜	62'-9	18'-4⅝
	11'	15'-0	15'-9¼	28'-6	5'-3⅞	12'-2¾	30'-7⅜	46'-0⅝	64'-5¼	18'-4⅝
	12'	16'-0	16'-8⅜	30'-3⅜	5'-6¼	11'-11⅜	30'-4	47'-9	66'-1⅝	18'-4⅝

NOTES:

See Std. CWA-1 for Details, Quantities and other Notes.

Δ = Length to be added for each additional barrel.

Subscript 1 or 2 indicates number of barrels.

DESIGN	DRAWN	CHECKED
DHY	GFB	MAB
10-72	3-73	3-73
①	②	③

DESCRIPTION OF REVISIONS | MADE BY | DATE

DESIGN APPROVED: R.C. Buehler

APPROVED FOR DISTRIBUTION

STATE OF ARIZONA
DEPARTMENT OF TRANSPORTATION
DIVISION OF HIGHWAYS
STANDARD DRAWINGS

OUTLET APRONS FOR CW2 AND CW6 WINGS

REVISION

STANDARD NO. CWA-2

DRAWING NO. B-6.02

HEADWALL QUANTITIES FOR CW2 WINGS

Span	Height	RIGHT ANGLE						30° SKEW						45° SKEW					
		Concrete (C.Y.)			Steel (Lbs.)			Concrete (C.Y.)			Steel (Lbs.)			Concrete (C.Y.)			Steel (Lbs.)		
		1 Barrel		Δ_c	1 Barrel		Δ_s	1 Barrel		Δ_c	1 Barrel		Δ_s	1 Barrel		Δ_c	1 Barrel		Δ_s
		Inlet	Outlet		Inlet	Outlet		Inlet	Outlet		Inlet	Outlet		Inlet	Outlet		Inlet	Outlet	
6'	3'	3.24	3.08	.99	266	261	79.7	3.73	3.74	1.14	303	303	95.3	4.49	4.49	1.40	366	366	115.9
	4'	4.20	4.01	.99	325	321	79.7	4.75	4.76	1.14	369	369	95.3	5.74	5.74	1.40	455	455	115.9
	5'	5.37	5.14	.99	413	400	79.7	5.96	5.96	1.14	454	454	95.3	7.42	7.42	1.40	559	559	115.9
	6'	6.64	6.66	.99	490	482	79.7	7.30	7.31	1.14	532	532	95.3	9.38	9.38	1.40	690	690	115.9
	7'	8.14	8.42	.99	571	588	79.7	8.98	8.99	1.14	646	646	95.3	11.40	11.40	1.40	830	830	115.9
8'	3'	3.54	3.38	1.30	290	285	110.4	4.08	4.08	1.50	333	333	123.1	4.91	4.91	1.83	398	398	152.0
	4'	4.50	4.32	1.30	349	345	110.4	5.10	5.10	1.50	400	400	123.1	6.27	6.27	1.83	487	487	152.0
	5'	5.67	5.44	1.30	437	424	110.4	6.31	6.32	1.50	484	484	123.1	7.86	7.86	1.83	591	591	152.0
	6'	6.95	6.97	1.30	514	506	110.4	7.64	7.65	1.50	563	563	123.1	9.80	9.80	1.83	722	722	152.0
	7'	8.43	8.73	1.30	595	612	110.4	9.34	9.35	1.50	677	677	123.1	11.86	11.86	1.83	862	862	152.0
	8'	12.28	12.79	1.30	700	746	110.4	13.96	13.97	1.50	786	786	123.1	16.94	16.94	1.83	960	960	152.0
10'	3'	3.90	3.73	1.60	317	311	134.5	4.48	4.49	1.85	368	368	154.6	5.42	5.42	2.27	474	474	224.4
	4'	4.85	4.66	1.60	376	372	134.5	5.50	5.51	1.85	435	435	154.6	6.75	6.75	2.27	563	563	224.4
	5'	5.99	5.75	1.60	463	451	134.5	6.67	6.68	1.85	520	520	154.6	8.30	8.30	2.27	667	667	224.4
	6'	7.27	7.30	1.60	540	532	134.5	8.03	8.04	1.85	598	598	154.6	10.27	10.27	2.27	798	798	224.4
	7'	8.74	9.05	1.60	622	639	134.5	9.71	9.72	1.85	712	712	154.6	12.29	12.29	2.27	939	939	224.4
	8'	12.59	13.11	1.60	721	778	134.5	14.32	14.33	1.85	820	820	154.6	17.39	17.39	2.27	1030	1030	224.4
	9'	14.88	15.79	1.60	861	924	134.5	16.97	16.98	1.85	1025	1025	154.6	20.74	20.74	2.27	1296	1296	224.4
	10'	17.42	18.67	1.60	1067	1180	134.5	19.51	19.52	1.85	1226	1226	154.6	24.36	24.36	2.27	1632	1632	224.4
12'	8'	12.92	13.46	1.93	753	805	160.9	14.71	14.73	2.22	886	886	219.8	17.88	17.88	2.72	1183	1183	373.3
	9'	15.24	16.18	1.93	893	951	160.9	17.39	17.41	2.22	1090	1090	219.8	21.26	21.26	2.72	1449	1449	373.3
	10'	17.80	19.08	1.93	1099	1207	160.9	19.95	19.96	2.22	1291	1291	219.8	24.90	24.90	2.72	1785	1785	373.3
	11'	21.18	22.32	1.93	1469	1518	160.9	23.40	23.41	2.22	1610	1610	219.8	28.91	28.91	2.72	2062	2062	373.3
	12'	24.23	25.29	1.93	1772	1835	160.9	26.81	26.82	2.22	1922	1922	219.8	33.27	33.27	2.72	2638	2638	373.3

HEADWALL QUANTITIES FOR CW6 WINGS

Span	Height	RIGHT ANGLE						30° SKEW						45° SKEW					
		Concrete (C.Y.)			Steel (Lbs.)			Concrete (C.Y.)			Steel (Lbs.)			Concrete (C.Y.)			Steel (Lbs.)		
		1 Barrel		Δ_c	1 Barrel		Δ_s	1 Barrel		Δ_c	1 Barrel		Δ_s	1 Barrel		Δ_c	1 Barrel		Δ_s
		Inlet	Outlet		Inlet	Outlet		Inlet	Outlet		Inlet	Outlet		Inlet	Outlet		Inlet	Outlet	
6'	3'	4.44	4.50	.99	346	367	79.7	5.08	5.09	1.14	399	399	95.3	5.43	5.43	1.40	424	424	115.9
	4'	5.66	6.48	.99	436	490	79.7	7.16	7.17	1.14	537	537	95.3	7.72	7.72	1.40	566	566	115.9
	5'	7.18	9.21	.99	525	691	79.7	9.75	9.76	1.14	724	724	95.3	10.57	10.57	1.40	733	733	115.9
	6'	9.14	11.62	.99	659	824	79.7	12.38	12.39	1.14	871	871	95.3	13.59	13.59	1.40	911	911	115.9
	7'	11.44	14.24	.99	786	1000	79.7	14.92	14.92	1.14	1040	1040	95.3	16.99	16.99	1.40	1101	1101	115.9
8'	3'	4.74	4.81	1.30	370	391	110.4	5.43	5.44	1.50	430	430	123.1	5.85	5.85	1.83	456	456	152.0
	4'	5.97	6.79	1.30	460	514	110.4	7.51	7.52	1.50	567	567	123.1	8.15	8.15	1.83	599	599	152.0
	5'	7.50	9.53	1.30	549	715	110.4	10.11	10.12	1.50	754	754	123.1	11.00	11.00	1.83	766	766	152.0
	6'	9.45	11.93	1.30	683	848	110.4	12.73	12.74	1.50	901	901	123.1	14.02	14.02	1.83	944	944	152.0
	7'	11.76	14.58	1.30	809	1023	110.4	15.30	15.31	1.50	1071	1071	123.1	17.45	17.45	1.83	1133	1133	152.0
	8'	17.22	20.52	1.30	946	1148	110.4	21.67	21.68	1.50	1258	1258	123.1	22.85	22.85	1.83	1322	1322	152.0
10'	3'	5.07	5.14	1.60	397	418	134.5	5.80	5.81	1.85	460	460	154.6	6.30	6.30	2.27	497	497	191.1
	4'	6.30	7.11	1.60	487	541	134.5	7.88	7.89	1.85	598	598	154.6	8.60	8.60	2.27	640	640	191.1
	5'	7.81	9.87	1.60	576	742	134.5	10.49	10.50	1.85	785	785	154.6	11.47	11.47	2.27	807	807	191.1
	6'	9.78	12.30	1.60	710	875	134.5	13.15	13.16	1.85	932	932	154.6	14.51	14.51	2.27	984	984	191.1
	7'	12.09	14.92	1.60	836	1050	134.5	15.69	15.70	1.85	1101	1101	154.6	17.91	17.91	2.27	1174	1174	191.1
	8'	17.54	20.88	1.60	968	1179	134.5	22.07	22.08	1.85	1292	1292	154.6	23.32	23.32	2.27	1397	1397	224.3
	9'	21.44	23.86	1.60	1257	1416	134.5	25.72	25.73	1.85	1544	1544	154.6	27.19	27.19	2.27	1696	1696	224.3
	10'	25.10	26.95	1.60	1620	1701	134.5	29.32	29.33	1.85	1858	1858	154.6	31.24	31.24	2.27	2104	2104	224.3
12'	8'	17.90	21.27	1.93	999	1206	160.9	22.50	22.52	2.22	1357	1357	219.8	23.83	23.83	2.72	1545	1545	373.3
	9'	21.83	24.29	1.93	1288	1444	160.9	26.19	26.20	2.22	1609	1609	219.8	27.74	27.74	2.72	1844	1844	373.3
	10'	25.50	27.40	1.93	1652	1728	160.9	29.80	29.81	2.22	1923	1923	219.8	31.81	31.81	2.72	2252	2252	373.3
	11'	29.49	30.76	1.93	2075	1978	160.9	33.36	33.37	2.22	2314	2314	219.8	36.22	36.22	2.72	2642	2642	373.3
	12'	33.65	34.24	1.93	2394	2340	160.9	37.02	37.03	2.22	2654	2654	219.8	40.88	40.88	2.72	3230	3230	373.3

NOTE:

All quantities are for headwalls of barrels shown in Table No. I (0-10' Fill).

Quantities are shown for single barrel culvert only. Multi-barrel culvert headwall quantities are obtained by adding, for each additional barrel, Δs and Δc to the inlet and outlet quantities.

NOTATIONS:

Δc = Inlet or outlet concrete quantity per additional barrel.
Δs = Inlet or outlet steel quantity per additional barrel.

DESIGN	DHY	9-72	NO.	DESCRIPTION OF REVISIONS	MADE BY	DATE
DRAWN	FDL	9-72	(1)	Concrete quantities for H+8' & over	J T W	7-76
CHECKED	RPJ	9-72	(2)			
			(3)			

DESIGN APPROVED	STATE OF ARIZONA DEPARTMENT OF TRANSPORTATION DIVISION OF HIGHWAYS STANDARD DRAWINGS	REVISION 7-76
APPROVED FOR DISTRIBUTION	HEADWALL QUANTITIES FOR CW2 AND CW6 WINGS	STANDARD NO. CWQ-1 DRAWING NO. B-7.01

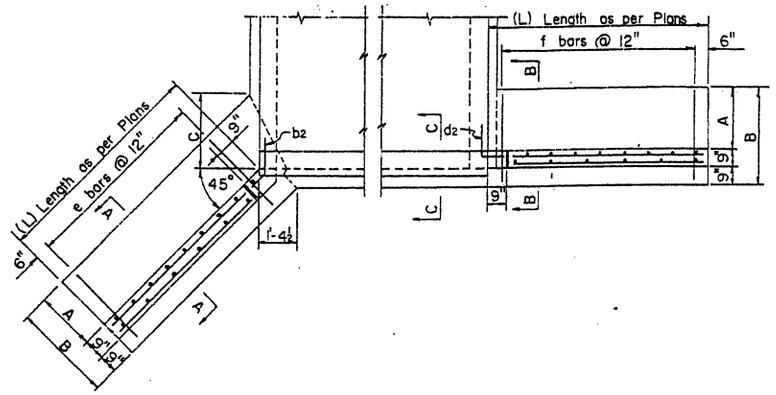

TYPE A WING

TYPE B WING

HEADWALL PLAN

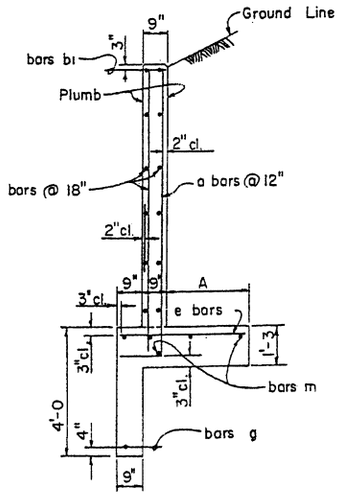

SECTION A-A

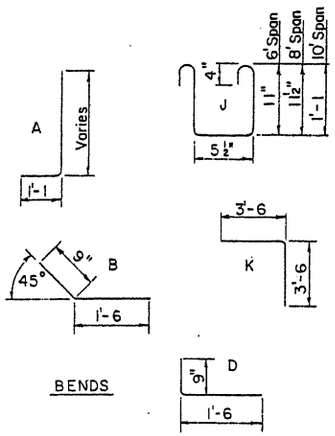

BENDS

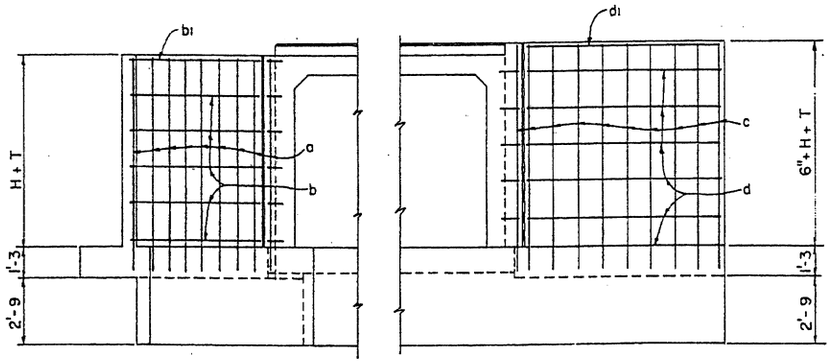

TYPE A WING

TYPE B WING

ELEVATION (Back Face Reinf.)

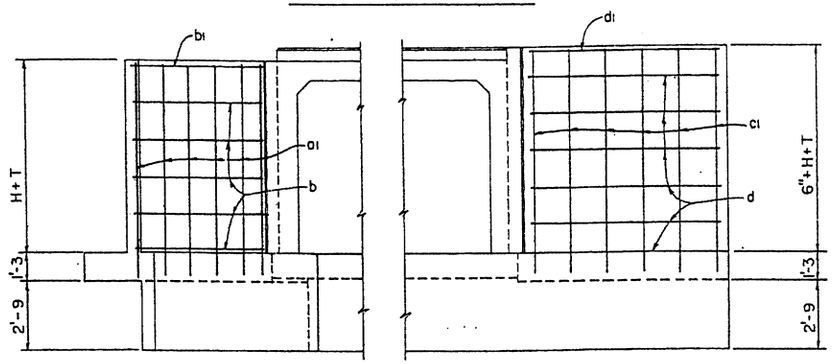

TYPE A WING

TYPE B WING

ELEVATION (Front Face Reinf.)

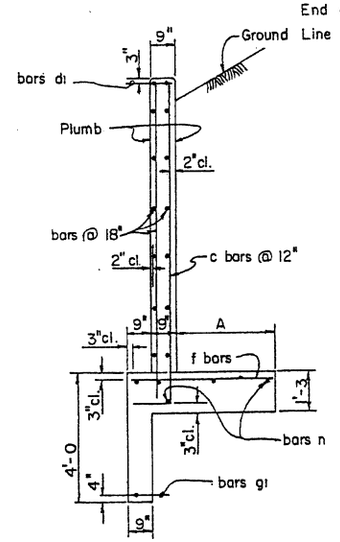

SECTION B-B

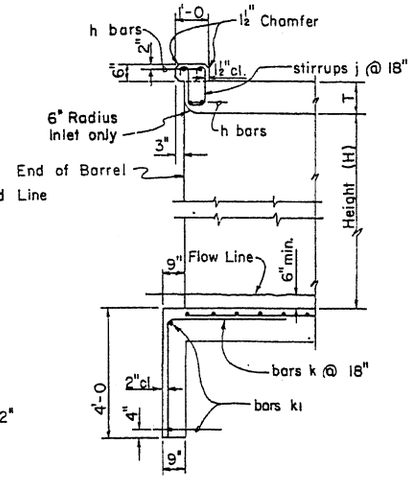

SECTION C-C

DIMENSIONS

Height of Opening	A	B	C
3'	1'-6	3'-0	1'-9
4'	2'-0	3'-6	2'-6
5'	2'-6	4'-0	3'-2
6'	3'-0	4'-6	3'-11
7'	3'-3	4'-9	4'-3

WINGS STEEL LIST (L=H+2)

Mark	Bend	3' Height			4' Height			5' Height			6' Height			7' Height		
		No.	Size	Lgth.	No.	Size	Lgth.	No.	Size	Lgth.	No.	Size	Lgth.	No.	Size	Lgth.
TYPE A WING																
a	A	12	#5	5'-6	14	#5	6'-6	16	#5	7'-6	18	#6	8'-6	20	#7	9'-6
a1	str.	8	#4	4'-6	8	#4	5'-6	8	#4	6'-6	10	#4	7'-6	10	#4	8'-6
b	✓	8	✓	4'-0	12	✓	5'-0	12	✓	6'-0	16	✓	7'-0	20	✓	8'-0
b1	✓	4	#6	4'-0	4	#6	5'-0	4	#6	6'-0	4	#6	7'-0	4	#6	8'-0
b2	B	6	#4	2'-3	8	#4	2'-3	8	#4	2'-3	10	#4	2'-3	12	#4	2'-3
e	str.	12	#5	2'-6	14	#5	3'-0	16	#5	3'-6	18	#5	4'-0	20	#5	4'-3
g	B	2	#4	6'-9	2	#4	7'-9	2	#4	8'-9	2	#4	9'-9	2	#4	10'-9
m	str.	8	✓	5'-0	8	✓	6'-0	10	✓	7'-0	10	✓	8'-0	10	✓	9'-0
TYPE B WING																
c	A	12	#5	6'-0	14	#5	7'-0	16	#5	8'-0	18	#6	9'-0	20	#7	10'-0
c1	str.	8	#4	5'-0	8	#4	6'-0	8	#4	7'-0	10	#4	8'-0	10	#4	9'-0
d	✓	8	✓	4'-0	12	✓	5'-0	12	✓	6'-0	16	✓	7'-0	20	✓	8'-0
d1	✓	4	#6	4'-0	4	#6	5'-0	4	#6	6'-0	4	#6	7'-0	4	#6	8'-0
d2	D	6	#4	2'-3	8	#4	2'-3	8	#4	2'-3	10	#4	2'-3	12	#4	2'-3
f	str.	10	#5	2'-6	12	#5	3'-0	14	#5	3'-6	16	#5	4'-0	18	#5	4'-3
g1	✓	2	#4	6'-3	2	#4	7'-3	2	#4	8'-3	2	#4	9'-3	2	#4	10'-3
n	✓	8	✓	5'-0	8	✓	6'-0	10	✓	7'-0	10	✓	8'-0	10	✓	9'-0

CURB & CUT-OFF WALL STEEL LIST

Mark	Bend	Size	6' Spans				8' Spans				10' Spans			
			1 Barrel		○	◇	1 Barrel		○	◇	1 Barrel		○	◇
			No.	Lgth.	No.	Lgth.	No.	Lgth.	No.	Lgth.	No.	Lgth.	No.	Lgth.
TYPE A WING														
h	str.	#6	4	7'-0		6'-8	4	9'-0		8'-9	4	11'-3		10'-10
j	J	#4	6	3'-6	4		7	3'-6	6		8	3'-9	7	
k	K	✓	4	7'-0	4		5	7'-0	6		6	7'-0	7	
k1	str.	✓	2	4'-6		6'-8	2	6'-9		8'-9	2	9'-0		10'-10
TYPE B WING														
h	str.	#6	4	7'-0		6'-8	4	9'-0		8'-9	4	11'-3		10'-10
j	J	#4	6	3'-6	4		7	3'-6	6		9	3'-9	7	
k	K	✓	5	7'-0	4		7	7'-0	6		9	7'-0	7	
k1	str.	✓	2	7'-3		6'-8	2	9'-3		8'-9	2	11'-6		10'-10

○ Additional number of bars per each extra barrel.

◇ Additional length of bars per each extra barrel.

APPROXIMATE QUANTITIES*

Span	Height	Type A Wing Hdwl.				Type B Wing Hdwl.			
		For L=H+2'		Per each Add. Ft.		For L=H+2'		Per each Add. Ft.	
		Conc.	Steel	Conc.	Steel	Conc.	Steel	Conc.	Steel
6'	3'	4.18	297	.3146	19	4.32	308	.3310	20
	4'	5.52	375	.3655	23	5.60	382	.3819	23
	5'	7.07	456	.4164	25	7.07	467	.4329	26
	6'	8.86	636	.4673	33	8.75	652	.4838	34
	7'	10.58	864	.5067	41	10.43	886	.5231	43
8'	3'	4.47	319	.3157	19	4.61	336	.3322	20
	4'	5.80	397	.3666	23	5.88	409	.3831	23
	5'	7.35	477	.4176	25	7.37	494	.4340	26
	6'	9.14	658	.4685	33	9.04	679	.4849	34
	7'	10.88	886	.5090	41	10.75	913	.5255	43
10'	3'	4.81	344	.3180	19	4.94	368	.3345	20
	4'	6.13	423	.3640	23	6.21	441	.3854	23
	5'	7.66	503	.4210	25	7.69	527	.4375	26
	6'	9.46	683	.4731	33	9.39	712	.4896	34
	7'	11.19	911	.5125	41	11.09	946	.5290	43

*Includes curb and cut-off wall quantities to ℄ of a single barrel.

CURB & CUT-OFF WALL QUANTITIES PER EACH ADD. BARREL

6' Spans		8' Spans		10' Spans	
Conc.	Steel	Conc.	Steel	Conc.	Steel
.859	76	1.114	103	1.370	130

NOTE:

See Std. CM-1 for general notes and miscellaneous details.

DESIGN	DWY	8-72	NO.	DESCRIPTION OF REVISIONS	MADE BY	DATE
DRAWN	APJ	9-72	(1)	Curb height now 6"	JTW	7-76
CHECKED	NAB	9-72	(2)			
			(3)			

DESIGN APPROVED: K.C. Buechler

APPROVED FOR DISTRIBUTION: R. Stedelli

STATE OF ARIZONA
DEPARTMENT OF TRANSPORTATION
DIVISION OF HIGHWAYS
STANDARD DRAWINGS

INLET OR OUTLET
LEVEL WINGS,
HEIGHT 3' TO 7'

REVISION 7-76

STANDARD NO. CWL-1

DRAWING NO. B-8.01

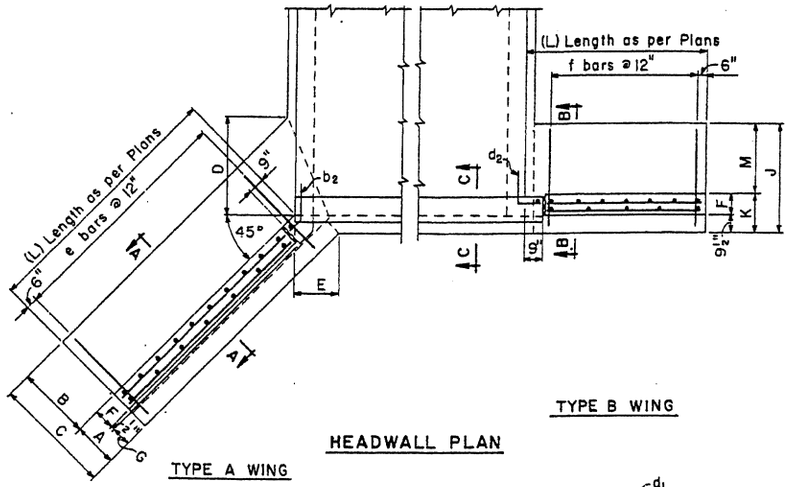

TYPE B WING

HEADWALL PLAN

TYPE A WING

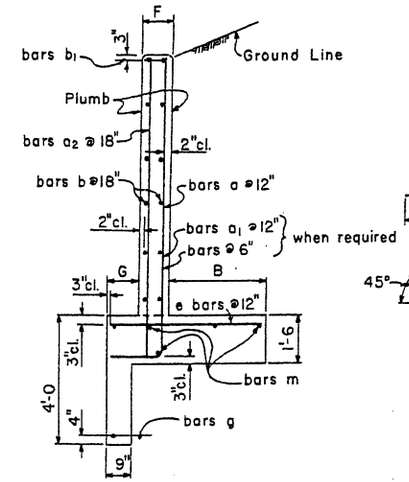

SECTION A-A

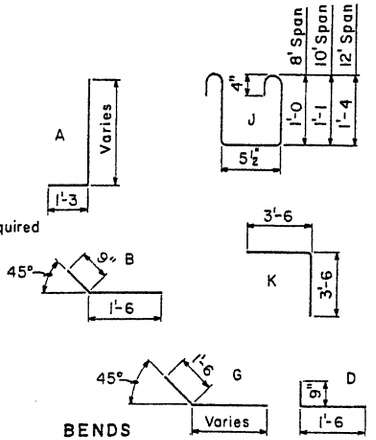

BENDS

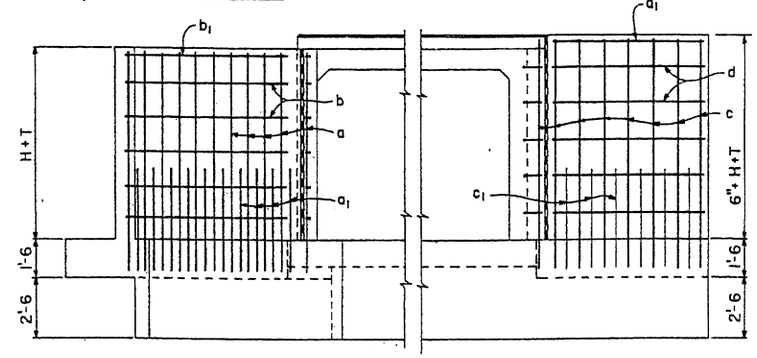

TYPE A WING
(Back Face Reinf.)

TYPE B WING
(Back Face Reinf.)

ELEVATION

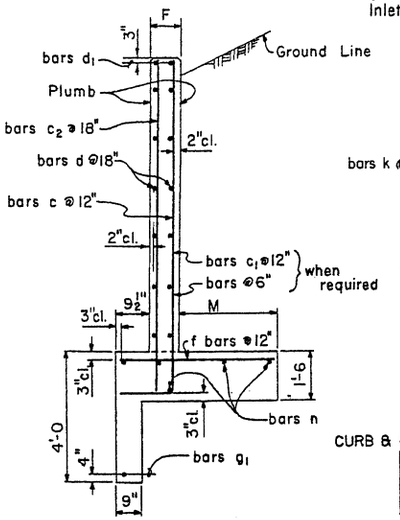

SECTION B-B

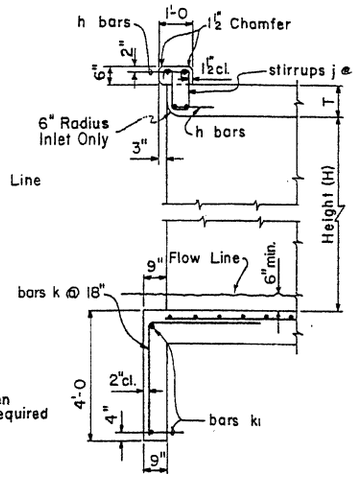

SECTION C-C

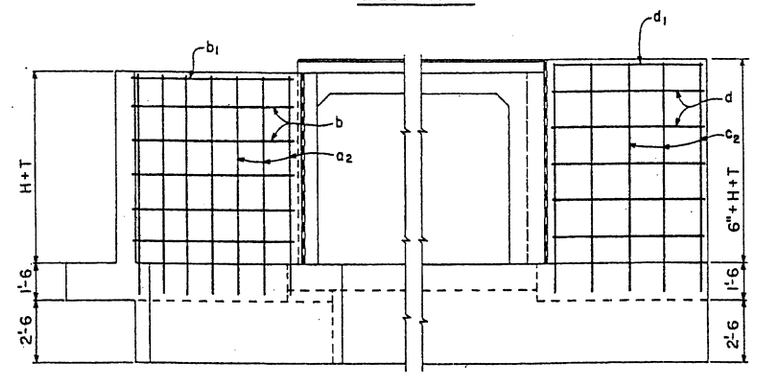

TYPE A WING
(Front Face Reinf.)

TYPE B WING
(Front Face Reinf.)

ELEVATION

WINGS STEEL LIST (L=H+2')

Mark	Bend	8' Height No.	Size	Lgth.	9' Height No.	Size	Lgth.	10' Height No.	Size	Lgth.	11' Height No.	Size	Lgth.	12' Height No.	Size	Lgth.
TYPE A WING																
a	A	20	#7	11'-0	22	#8	12'-3	24	#6	13'-3	26	#7	14'-3	28	#7	15'-3
a_1	A							24	#6	6'-6	26	#7	6'-9	28	#7	7'-0
a_2	str.	14	#4	9'-9	14	#4	11'-0	16	#4	12'-0	18	#4	13'-0	18	#4	14'-0
b	⌄	20	#4	9'-0	24	#4	10'-0	28	#4	11'-0	28	#4	12'-0	32	#4	13'-0
b_1	⌄	4	#6	9'-0	4	#6	10'-0	4	#6	11'-0	4	#6	12'-0	4	#6	13'-0
b_2	B	12	#4	2'-3	14	#4	2'-3	16	#4	2'-3	16	#4	2'-3	18	#4	2'-3
e	str.	20	#5	5'-0	22	#6	5'-6	24	#7	6'-0	26	#7	6'-6	28	#8	6'-9
g	G	2	#4	12'-3	2	#4	13'-9	2	#4	14'-9	2	#4	16'-0	2	#4	17'-0
m	str.	10	#4	9'-6	10	#4	10'-6	10	#4	11'-6	10	#4	12'-6	10	#4	13'-6
TYPE B WING																
c	A	20	#7	11'-6	22	#8	12'-9	24	#6	13'-9	26	#7	14'-9	28	#7	15'-9
c_1	⌄							24	#6	6'-6	26	#7	6'-9	28	#7	7'-0
c_2	str.	14	#4	10'-3	14	#4	11'-6	16	#4	12'-6	18	#4	13'-6	18	#4	14'-6
d	⌄	24	#4	9'-0	28	#4	10'-0	28	#4	11'-0	32	#4	12'-0	36	#4	13'-0
d_1	⌄	4	#6	9'-0	4	#6	10'-0	4	#6	11'-0	4	#6	12'-0	4	#6	13'-0
d_2	D	14	#4	2'-3	16	#4	2'-3	16	#4	2'-3	18	#4	2'-3	20	#4	2'-3
f	str.	20	#5	5'-0	22	#6	5'-6	24	#7	6'-0	26	#7	6'-6	28	#9	7'-6
g_1	⌄	2	#4	11'-3	2	#4	12'-3	2	#4	13'-3	2	#4	14'-3	2	#4	15'-3
n	⌄	10	#4	9'-6	10	#4	10'-6	10	#4	11'-6	10	#4	12'-6	10	#4	13'-6

CURB & CUT-OFF WALL STEEL LIST

Mark	Bend	Size	8' Spans 1 Barrel ○ No.	Lgth.	◇ No.	Lgth.	10' Spans 1 Barrel ○ No.	Lgth.	◇ No.	Lgth.	12' Spans 1 Barrel ○ No.	Lgth.	◇ No.	Lgth.
TYPE A WING														
h	str.	#6	4	9'-0		8'-9	4	11'-3		10'-10	4	13'-6		13'-0
j	J	#4	7	3'-6	5		8	3'-9	7		9	4'-3	8	
k	K	⌄	4	7'-0	6		6	7'-0	7		7	7'-0	8	
k_1	str.	⌄	2	5'-9		8'-9	2	7'-6		10'-10	2	8'-3		13'-0
TYPE B WING														
h	str.	#6	4	10'-6		8'-9	4	12'-9		10'-10	4	15'-0		13'-0
j	J	#4	7	3'-6	6		9	3'-9	7		10	4'-3	8	
k	K	⌄	7	7'-0	6		9	7'-0	7		10	7'-0	8	
k_1	str.	⌄	2	9'-6		8'-9	2	11'-6		10'-10	2	13'-6		13'-0

○ Additional number of bars per. ea. extra barrel.
◇ Additional length of bars per. ea. extra barrel.

CURB & CUT-OFF WALL QUANTITIES PER EACH ADD. BARREL

8' Spans Conc.	Steel	10' Spans Conc.	Steel	12' Spans Conc.	Steel
1.114	103	1.370	130	1.625	155

APPROXIMATE QUANTITIES*

Span	Height	Type A Wing Hdwl. For L=H+2' Conc.	Steel	Per each Add. Ft. Conc.	Steel	Type B Wing Hdwl. For L=H+2' Conc.	Steel	Per each Add. Ft. Conc.	Steel
8'	8'	15.07	1017	.682	46	15.05	1095	.703	49
10'	8'	15.44	1045	.690	46	15.41	1128	.707	49
	9'	18.30	1462	.753	61	18.18	1556	.771	63
	10'	21.49	1655	.817	64	21.20	1708	.835	65
12'	8'	15.78	1071	.696	46	15.80	1155	.714	49
	9'	18.67	1488	.759	61	18.59	1582	.777	63
	10'	21.86	1680	.822	64	21.61	1734	.840	65
	11'	25.95	2197	.663	78	25.61	2295	.922	81
	12'	30.03	2596	1.015	87	30.86	2908	1.035	98

* Includes curb and cut-off wall quantities to ℄ of a single barrel.

NOTE:
See Std. CM-1 for general notes and miscellaneous details.

DIMENSIONS

Height of Opening	A	B	C	D	E	F	G	J	K	M
8'	1'-9	3'-9	5'-6	5'-0	1'-8¾	11½	0'-9	5'-6	1'-9	3'-9
9'	2'-0	4'-0	6'-0	5'-4	2'-1	11½	1'-0	6'-0	1'-9	4'-3
10'	2'-0	4'-6	6'-6	6'-0	2'-1	11½	1'-0	6'-6	1'-9	4'-9
11'	2'-4	4'-8	7'-0	6'-3	2'-6⅜	1'-0½	1'-3	7'-0	1'-10	5'-2
12'	2'-6	4'-9	7'-3	6'-5	2'-9⅜	1'-1½	1'-4	8'-0	1'-11	6'-1

DESIGN APPROVED	STATE OF ARIZONA DEPARTMENT OF TRANSPORTATION DIVISION OF HIGHWAYS STANDARD DRAWINGS	REVISION 7-76
APPROVED FOR DISTRIBUTION	INLET OR OUTLET LEVEL WINGS, HEIGHT 8' TO 12'	STANDARD NO. CWL-2 / DRAWING NO. B-8.02

NO.	DESCRIPTION OF REVISIONS	MADE BY	DATE
1	Wing thickness & curb height	JTW	7-76
2			
3			

	WT. CHKY	B-72
DESIGN	KCM, APV	9-72
DRAWN	NAB, APV	3-73
CHECKED		

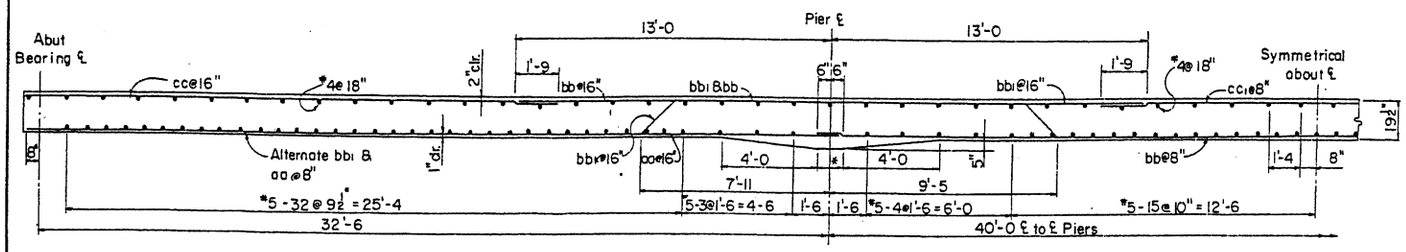

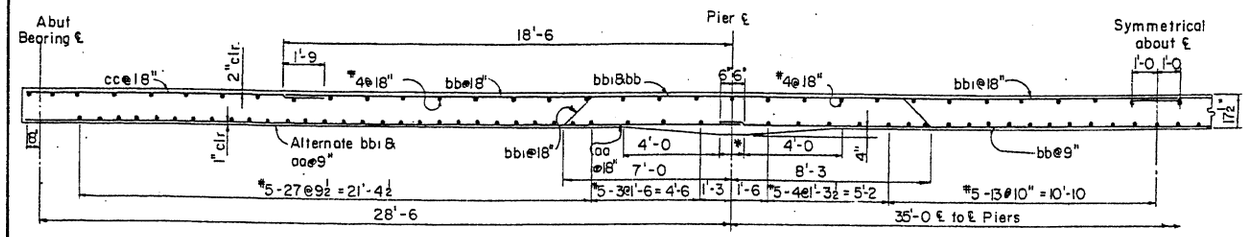

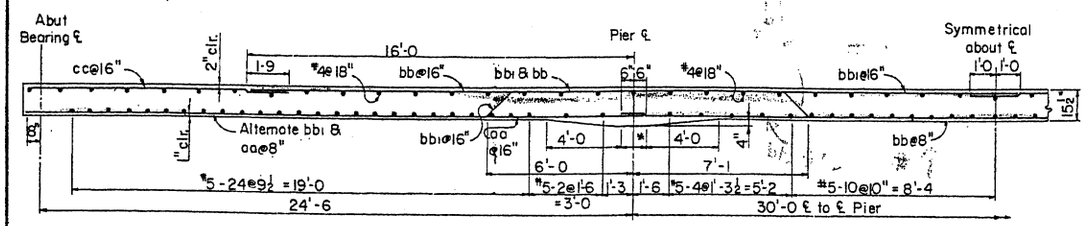

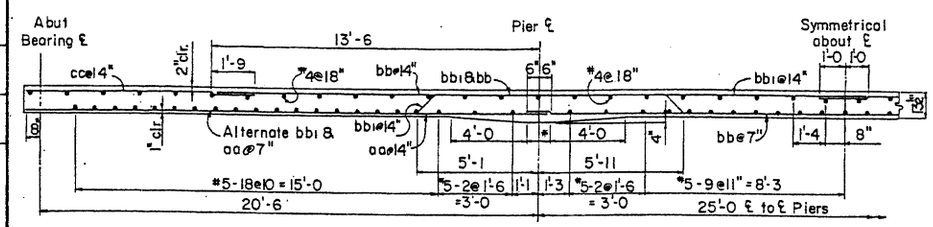

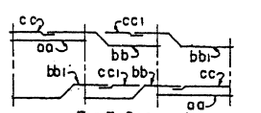

For 3 Spans

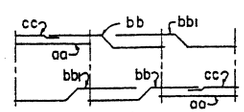

For 3 Spans

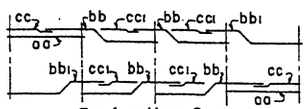

For 4 or More Spans

SLAB STEEL PLACING DIAGRAM

For 32½-40 Span Length

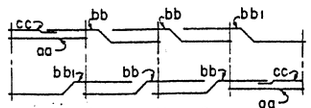

For 4 or More Spans

SLAB STEEL PLACING DIAGRAM

For 28½-35, 24½-30 & 20½-25 Span Lengths

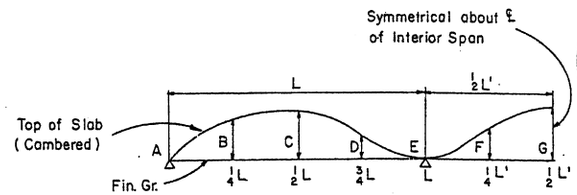

DEAD LOAD CAMBER DIAGRAM

NO SCALE

DEAD LOAD CAMBER

L	L'	A	B	C	D	E	F	G
32'-6	40'-0	0"	1/4"	9/32"	1/8"	0"	1/8"	9/32"
28'-6	35'-0	0"	3/16"	3/32"	3/32"	0"	3/32"	3/16"
24'-6	30'-0	0"	1/8"	5/32"	1/16"	0"	3/32"	5/32"
20'-6	25'-0	0"	3/32"	3/32"	1/32"	0"	1/32"	3/32"

STEEL LIST

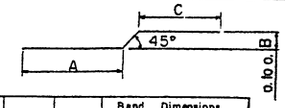

Span Lgths	Mark	Size	Bend	Lgth	Bend Dimensions A	B	C
32'-6, 40'-0	aa	10	str	33'-9			
	bb	10	⌒	54'-0	31'-1	1'-4½	21'-2
	bb1	10	⌒	46'-9	25'-3	1'-4½	19'-8
	cc	6	str	22'-0			
	cc1	4	str	17'-6			
28'-6, 35'-0	aa	10	str	29'-9			
	bb	10	⌒	54'-6	27'-3	1'-2½	25'-8
	bb1	10	⌒	48'-3	22'-2	1'-2½	24'-5
	cc	6	str	12'-6			
24'-6, 30'-0	aa	9	str	25'-9			
	bb	9	⌒	47'-0	23'-5	1'-0½	22'-2
	bb1	9	⌒	41'-6	19'-2	1'-0½	21'-1
	cc	6	str	11'-0			
20'-6, 25'-0	aa	8	str	21'-9			
	bb	8	⌒	39'-6	19'-7	10½"	18'-8
	bb1	8	⌒	35'-0	16'-1	10½"	17'-10
	cc	6	str	9'-6			

GENERAL NOTES:

See Project Drawings for cross section of deck slab, roadway width, curbs, railings, and foundations.
Minimum length of bridge shall be 3 spans. For additional length intermediate spans equal to the center span shall be added.
Construction - Standard Specifications Arizona Highway Department Edition of 1969, revised to date.
Design - A.A.S.H.O. Specifications for Highway Bridges 1973.

Dead Load - Dead Load includes allowance of 25 pounds per square foot for future wearing surface.
Loading Class - HS20-44
Load Distribution - E = 4.0 + .06S (S taken as effective end span length)
Stresses - Reinforcing Steel f_s = 20,000 psi
Concrete Class D f'_c = 3,000 psi, f_c = 1,200 psi
Reinforcing steel shall conform to A.S.T.M. Spec. A615 Grade 40.
Forms shall be cambered for dead load deflection, vertical curvature, form deflection and falsework settlement. Camber figures given in plans are for dead load only.
Curbs and/or sidewalk shall be poured to grade after falsework has been struck.
Dimensions shall not be scaled from drawings.
Haunch dimension normal to centerline of bent.

* Dimension varies. See Project Drawings for dimension and Special Pier Details.

NO.	DESCRIPTION OF REVISIONS	MADE BY	DATE
1	Added haunch dimension note	JTW	7-76
2			
3			

DESIGN	JEM	9-72
DRAWN	CAG	11-72
CHECKED	JEM, HW	12-72

DESIGN APPROVED	STATE OF ARIZONA DEPARTMENT OF TRANSPORTATION DIVISION OF HIGHWAYS STANDARD DRAWINGS	REVISION 7-76
APPROVED FOR DISTRIBUTION	CONTINUOUS SPAN SLAB HS20-44 LOADING	STANDARD NO. CS-20
		DRAWING NO. B-9.01

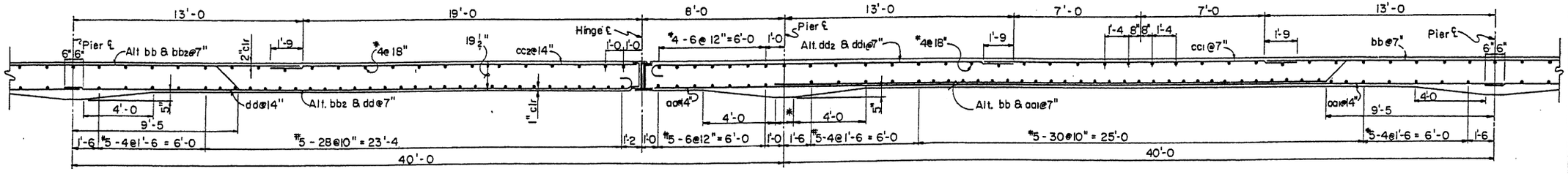

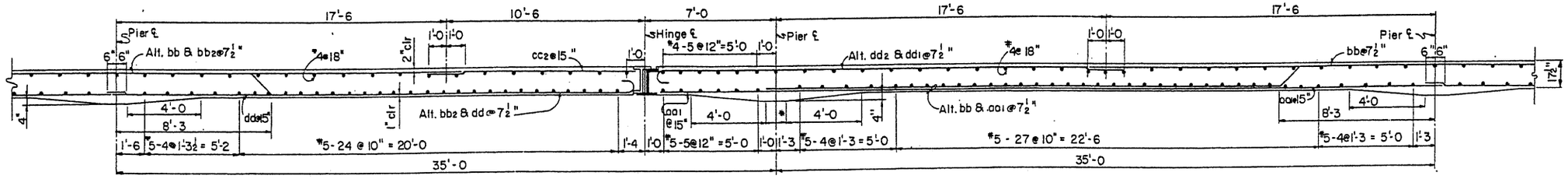

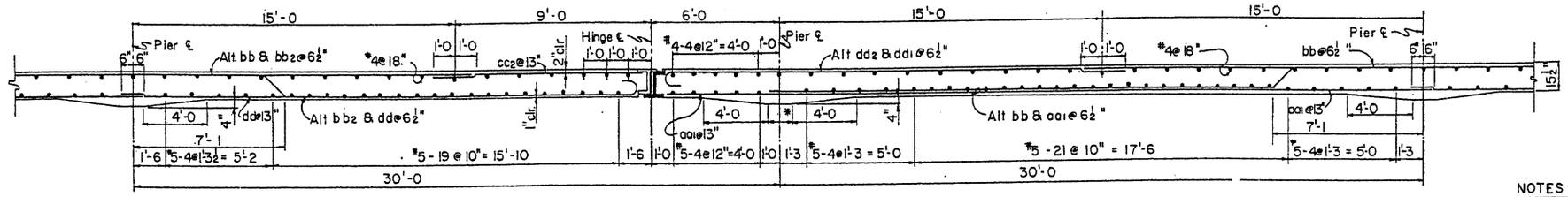

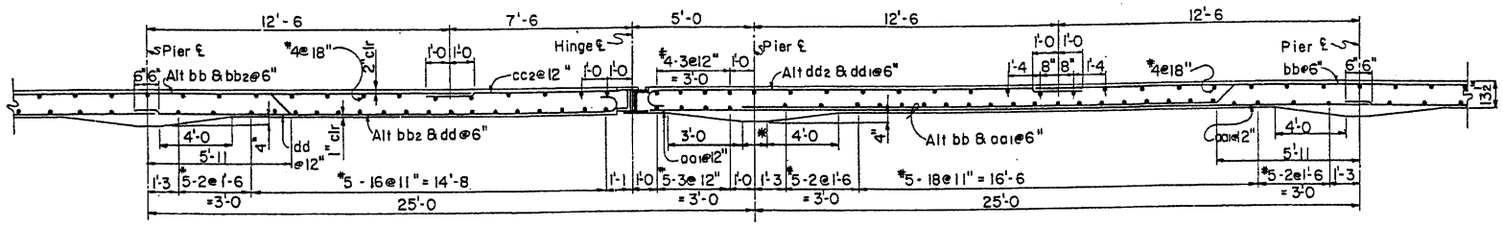

NOTES:

Refer to Std. CS-20 and Project Drawings for General Notes.

Refer to Std. CSH-M for steel list, bar placing diagrams and hinge details.

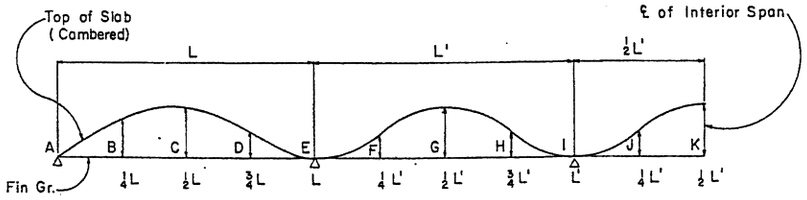

DEAD LOAD CAMBER DIAGRAM

NO SCALE

DEAD LOAD CAMBER

L	L'	A	B	C	D	E	F	G	H	I	J	K
32'-6	40'-0	0"	1/4"	9/32"	1/8"	0"	1/8"	9/32"	1/8"	0"	1/8"	9/32"
28'-6	35'-0	0"	3/16"	7/32"	3/32"	0"	3/32"	5/16"	3/32"	0"	3/32"	5/16"
24'-6	30'-0"	0"	1/8"	5/32"	1/16"	0"	3/32"	5/32"	3/32"	0"	3/32"	5/32"
20'-6	25'-0	0"	3/32"	3/32"	1/32"	0"	1/32"	3/32"	1/32"	0"	1/32"	3/32"

Camber hinge span as per interior spans.

*Dimension varies. See Project Drawings for dimension and Special Pier Details.

DESIGN	JEM	10-72	NO.	DESCRIPTION OF REVISIONS	MADE BY	DATE
DRAWN	CAB	11-72	1	Changed haunch dimension	J.T.W.	7-76
CHECKED	JEM, HW	12-72	2			
			3			

DESIGN APPROVED R.C. Buchler	STATE OF ARIZONA DEPARTMENT OF TRANSPORTATION DIVISION OF HIGHWAYS STANDARD DRAWINGS	REVISION 7-76
APPROVED FOR DISTRIBUTION	CONTINUOUS SPAN SLAB WITH HINGE HS20-44 LOADING	STANDARD NO. CSH-20
		DRAWING NO. B-9.02

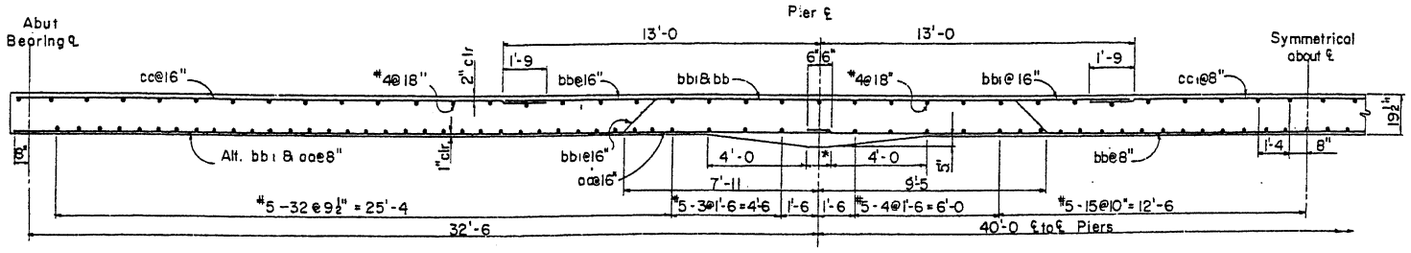

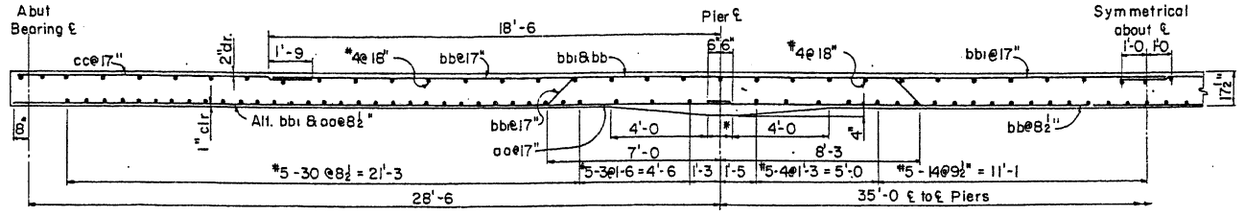

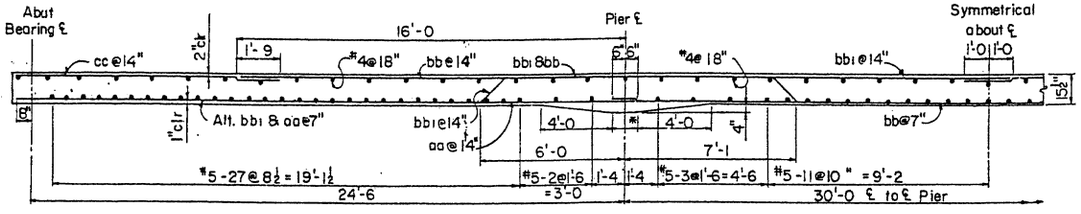

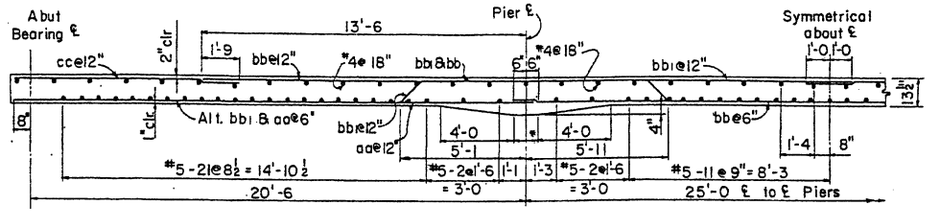

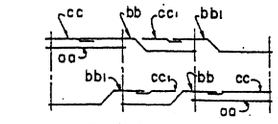

For 3 Spans

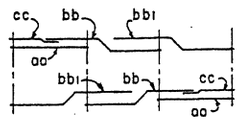

For 3 Spans

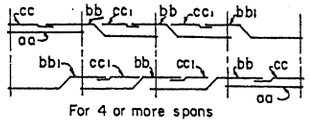

For 4 or more spans

SLAB STEEL PLACING DIAGRAM

For 32½ - 40 Span Length

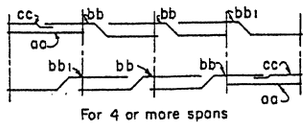

For 4 or more spans

SLAB STEEL PLACING DIAGRAM

For 28½ - 35, 24½ - 30, 20½ - 25 Span Lengths

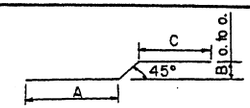

STEEL LIST

Span Lgths	Mark	Size	Bend	Lgth	Bend Dimensions A	B	C
32'-6, 40'-0	aa	10	str	33'-9			
	bb	10	⌒	54'-0	31'-1	1'-4½	21'-2
	bb1	10	⌒	46'-9	25'-3	1'-4½	19'-8
	cc	6	str	22'-0			
	cc1	4	str	17'-6			
28'-6, 35'-0	aa	10	str	29'-9			
	bb	10	⌒	54'-6	27'-3	1'-2½	25'-8
	bb1	10	⌒	48'-3	22'-2	1'-2½	24'-5
	cc	6	str	12'-6			
24'-6, 30'-0	aa	9	str	25'-9			
	bb	9	⌒	47'-0	23'-5	1'-0½	22'-2
	bb1	9	⌒	41'-6	19'-2	1'-0½	21'-1
	cc	6	str	11'-0			
20'-6, 25'-0	aa	8	str	21'-9			
	bb	8	⌒	39'-6	19'-7	10½"	18'-8
	bb1	8	⌒	35'-0	16'-1	10½"	17'-10
	cc	6	str	9'-6			

GENERAL NOTES:

See Project Drawings for cross section of deck slab, roadway width, curbs, railings, and foundations.
Minimum length of bridge shall be 3 spans. For additional length intermediate spans equal to the center span shall be added.
Construction - Standard Specifications Arizona Highway Department Edition of 1969, revised to date.
Design - A.A.S.H.O. Specifications for Highway Bridges 1973.

Dead Load - Dead Load includes allowance of 25 pounds per square foot for future wearing surface.
Loading Class - HS20-44 and/or Interstate Alternate Loading.
Load Distribution - E = 4.0 + .06S (S taken as effective end span length)
Stresses - Reinforcing Steel fs = 20,000 psi
Concrete Class D f'c = 3,000 psi, fc = 1,200 psi
Reinforcing steel shall conform to A.S.T.M. Spec. A 615 Grade 40
Forms shall be cambered for dead load deflection, vertical curvature, form deflection and falsework settlement. Camber figures given in plans are for dead load only.
Curbs and/or sidewalk shall be poured to grade after falsework has been struck.
Dimensions shall not be scaled from drawings.
Haunch dimension normal to centerline of bent.

DEAD LOAD CAMBER

L	L'	A	B	C	D	E	F	G
32'-6	40'-0	0"	1/4"	9/32"	1/8"	0"	1/8"	9/32"
28'-6	35'-0	0"	3/16"	7/32"	3/32"	0"	3/32"	3/16"
24'-6	30'-0	0"	1/8"	5/32"	1/16"	0"	3/32"	5/32"
20'-6	25'-0	0"	3/32"	3/32"	1/32"	0"	1/32"	3/32"

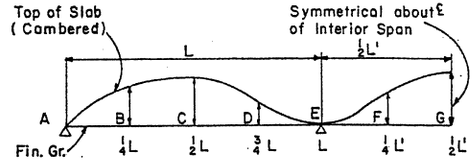

DEAD LOAD CAMBER DIAGRAM

NO SCALE

* Dimension varies. See Project Drawings for dimension and Special Pier Details.

DESIGN	JEM	8-72	NO	DESCRIPTION OF REVISIONS	MADE BY	DATE
DRAWN	CAG	11-72	1	Added haunch dimension note	J.T.W.	7-76
CHECKED	JEM, HW	12-72	2			
			3			

DESIGN APPROVED	STATE OF ARIZONA DEPARTMENT OF TRANSPORTATION DIVISION OF HIGHWAYS STANDARD DRAWINGS	REVISION 7-76
APPROVED, FOR DISTRIBUTION	CONTINUOUS SPAN SLAB INTERSTATE LOADING	STANDARD NO. CS-20 I
		DRAWING NO. B-9.03

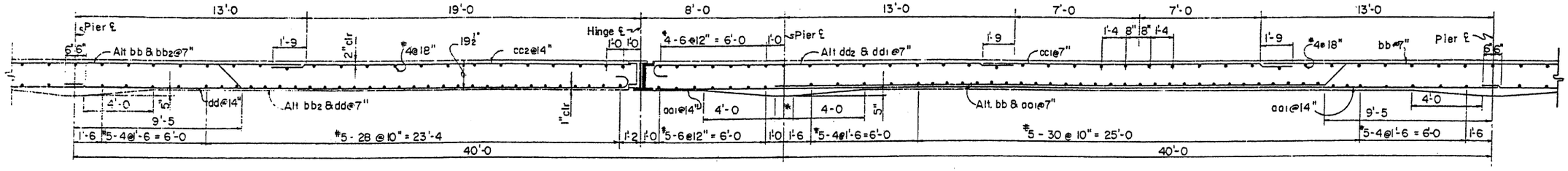

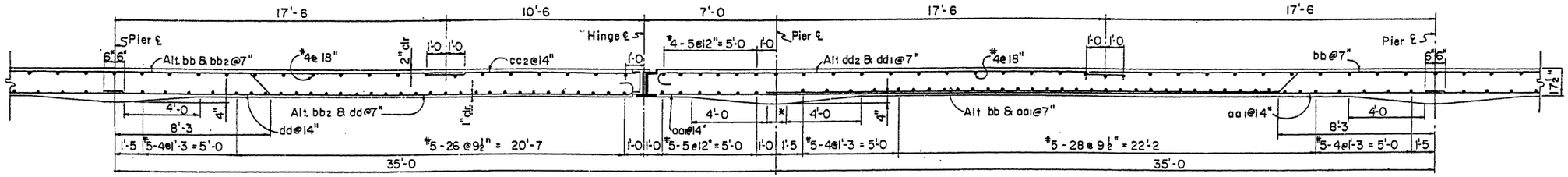

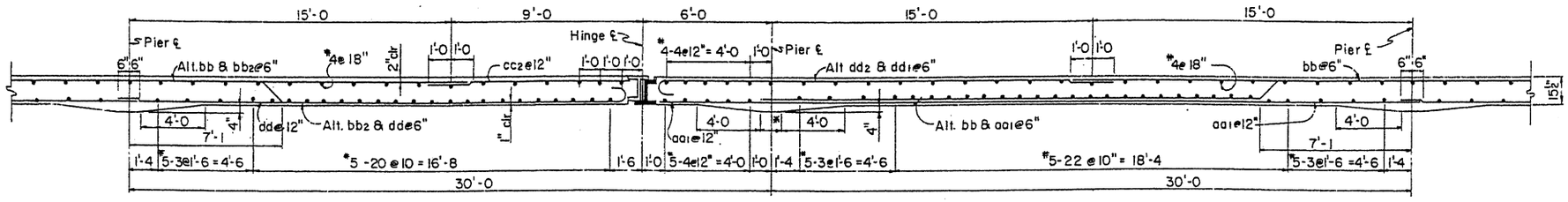

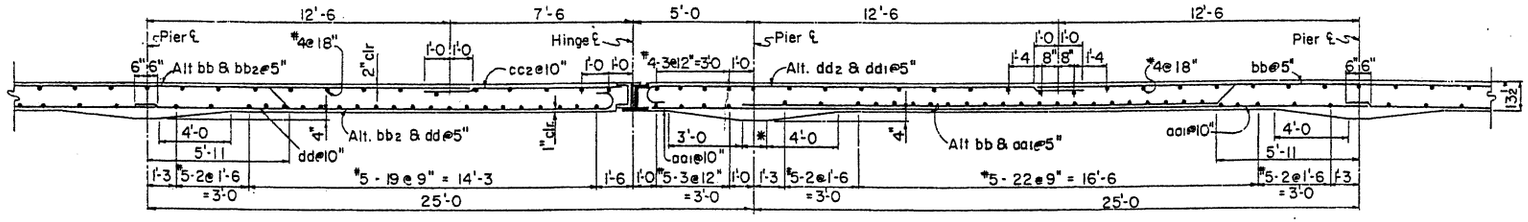

NOTES:

Refer to Std. CS-20I and Project Drawings for General Notes.
Refer to Std CSH-M for steel list, bar placing diagram and hinge details.

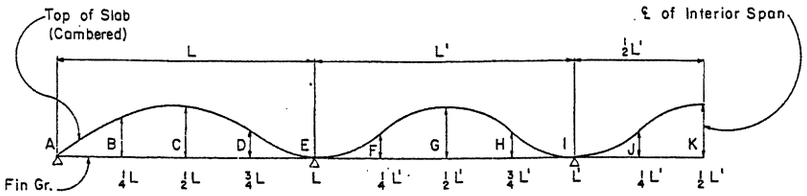

DEAD LOAD CAMBER DIAGRAM

NO SCALE

DEAD LOAD CAMBER

L	L'	A	B	C	D	E	F	G	H	I	J	K
32'-6	40'-0	0"	¼"	9/32"	⅛"	0"	⅛"	9/32"	⅛"	0"	⅛"	9/32"
28'-6	35'-0	0"	3/16"	7/32"	3/32"	0"	3/32"	3/16"	3/32"	0"	3/32"	3/16"
24'-6	30'-0	0"	⅛"	5/32"	1/16"	0"	3/32"	3/32"	3/32"	0"	3/32"	3/32"
20'-6	25'-0	0"	3/32"	3/32"	1/32"	0"	1/32"	3/32"	3/32"	0"	1/32"	3/32"

Camber hinge span as per interior spans

* Dimension varies. See Project Drawings for dimension and Special Pier Details.

DESIGN APPROVED	STATE OF ARIZONA DEPARTMENT OF TRANSPORTATION DIVISION OF HIGHWAYS STANDARD DRAWINGS	REVISION 7-76
APPROVED FOR DISTRIBUTION	CONTINUOUS SPAN SLAB WITH HINGE, INTERSTATE LOADING	STANDARD NO. CSH-20 I DRAWING NO. B-9.04

DESIGN	JEM	10-72	
DRAWN	CAG	11-72	
CHECKED	JEM, HW	12-72	

NO.	DESCRIPTION OF REVISIONS	MADE BY	DATE
1	Changed haunch dimension	JTW	7-76
2			
3			

INTERSTATE OR HS20-44*

Span Lgth	Mark	Size	Bend	Lgth	Bend Dimensions A	B	C	D	E
40'-0	aa1	10	str	47'-9					
	bb	10	2	54'-0	31'-1	1'-4½	21'-2		
	bb2	10	1	46'-0	22'-0	1'-4½	21'-2	9"	9½"
	cc1	4	str	17'-6					
	cc2	6	str	20'-6					
	dd	10	3	33'-0	31'-11	9"	9½"		
	dd1	10	3	21'-9	20'-7	9"	9½"		
	dd2	10	3	21'-9	20'-7	9"	9½"		
35'-0	aa1	10	str	41'-9					
	bb	10	2	54'-6	27'-3	1'-2½	25'-8		
	bb2	10	1	47'-6	19'-2	1'-2½	25'-8	9"	9½"
	cc2	6	str	11'-3					
	dd	10	3	29'-0	27'-11	9"	9½"		
	dd1	10	3	32'-6	31'-5	9"	9½"		
	dd2	10	3	26'-3	25'-1	9"	9½"		
30'-0	aa1	9	str	35'-9					
	bb	9	2	47'-0	23'-5	1'-0½	22'-2		
	bb2	9	1	40'-9	16'-4	1'-0½	22'-2	8"	8½"
	cc2	6	str	9'-9					
	dd	9	3	25'-0	23'-11	8"	8½"		
	dd1	9	3	27'-6	26'-5	8"	8½"		
	dd2	9	3	22'-6	21'-7	8"	8½"		
25'-0	aa1	8	str	29'-9					
	bb	8	2	39'-6	19'-7	10½"	18'-8		
	bb2	8	1	34'-3	13'-6	10½"	18'-8	7"	7½"
	cc2	6	str	8'-3					
	dd	8	3	20'-9	19'-11	7"	7½"		
	dd1	8	3	22'-3	21'-5	7"	7½"		
	dd2	8	3	19'-0	18'-1	7"	7½"		

* Bar sizes and bend dimensions are the same for both Interstate and HS20-44 slabs. Bar spacing varies for the two cases. See Stds. CSH-20 and CSH-20I for details.

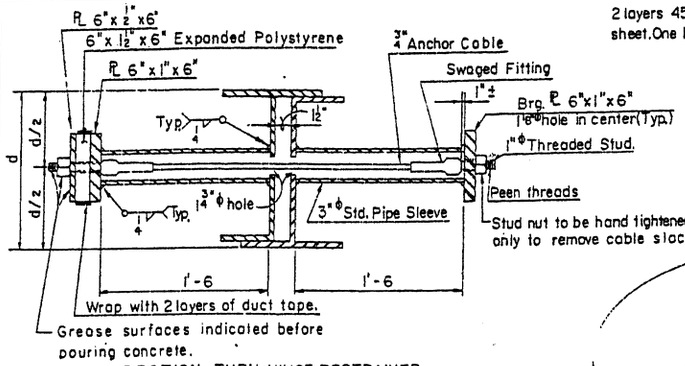

SECTION THRU HINGE RESTRAINER

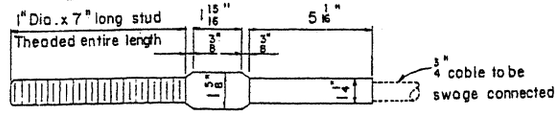

SWAGED FITTING AND STUD DETAIL

NOTE:

Anchor cable shall be 6 x 19 classification, galvanized, with a minimum breaking strength of 21.4 tons.

Swaged fitting and stud assembly shall conform to the requirements of American Iron and Steel Institute C1035 and shall develop the breaking strength of the cable

HINGE RESTRAINER DETAILS

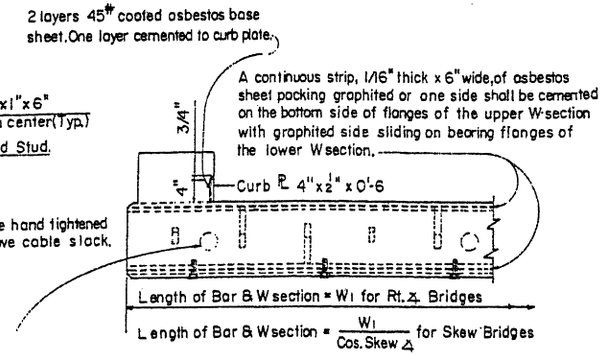

SECTION D-D

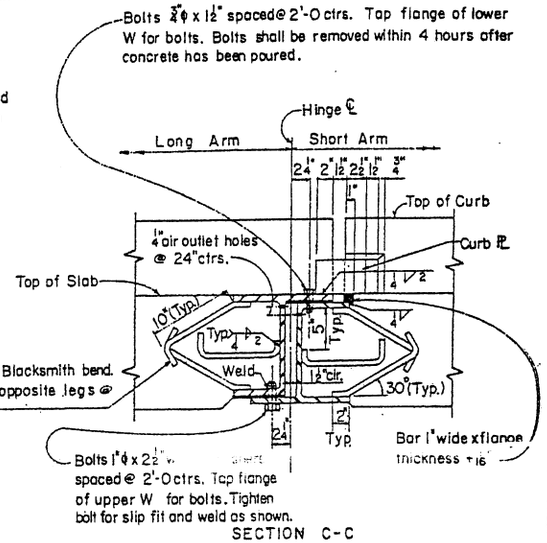

SECTION C-C

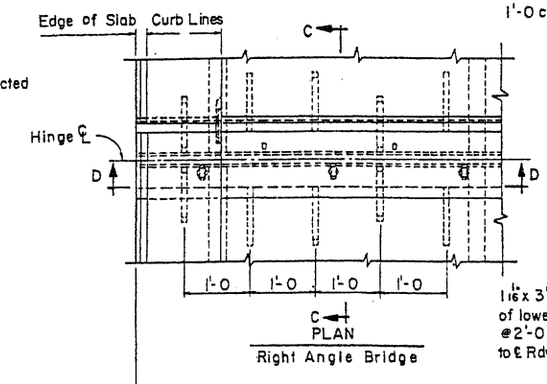

PLAN
Right Angle Bridge

NOTES: W sections see table below

Burn off one flange of each section flush with web face.

Bearing faces of flanges shall be ground smooth after drilling and tapping.

W sections shall have parallel flange faces.

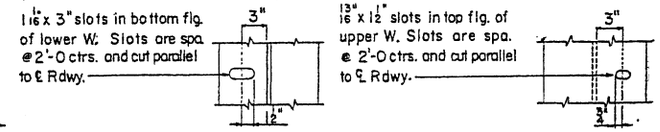

FLANGE SLOT DETAILS

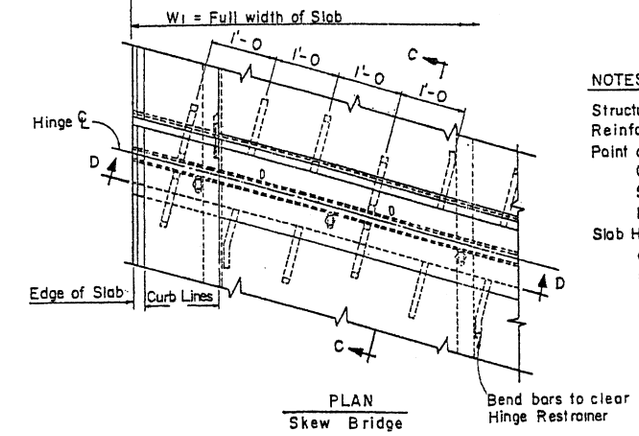

PLAN
Skew Bridge

NOTES:

Structural steel shall conform to ASTM Spec. A36.

Reinforcing steel shall conform to ASTM Spec. A 615 Grade 40.

Paint and painting shall conform to Standard Specifications.
Contact surfaces shall not be painted.
Structural steel - Shop - One coat paint #1A or #1B, #3 and #10.
No field paint required.

Slab Hinge Joint shall be shop assembled, shipped and erected as a unit. Unit shall be shop fabricated to conform to the roadway section as noted on deck details.

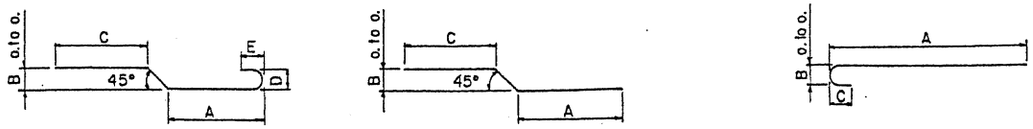

BEND 1 BEND 2 BEND 3

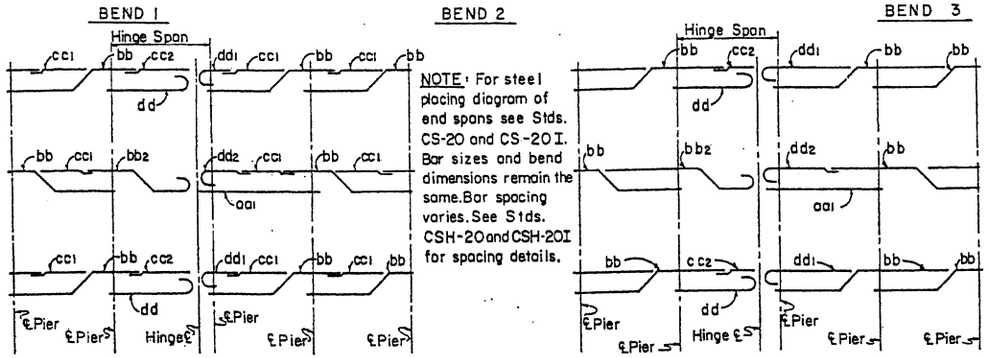

NOTE: For steel placing diagram of end spans see Stds. CS-20 and CS-20I. Bar sizes and bend dimensions remain the same. Bar spacing varies. See Stds. CSH-20 and CSH-20I for spacing details.

For 40' Span Lengths

For 35', 30' & 25' Span Lengths

STEEL PLACING DIAGRAM FOR HINGE SPAN & ADJACENT SPANS

TABLE OF W SECTIONS FOR VARIOUS SLAB THICKNESSES

Slab Thickness	W Section
19½"	W 18 x 96
17½"	W 16 x 88
15½"	W 14 x 78
13½"	W 12 x 72

DESIGN	JEM	10-72	NO.	DESCRIPTION OF REVISIONS	MADE BY	DATE
DRAWN	CAG	11-72	①			
CHECKED	JEM, HW	12-72	② ③			

DESIGN APPROVED R.C. Buchler

APPROVED FOR DISTRIBUTION

STATE OF ARIZONA
DEPARTMENT OF TRANSPORTATION
DIVISION OF HIGHWAYS
STANDARD DRAWINGS

SLAB HINGE JOINT AND HINGE SPAN REINFORCING DETAILS

REVISION

STANDARD NO. CSH-M

DRAWING NO. B-10.01

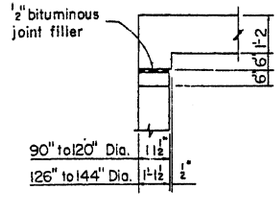

DETAIL B

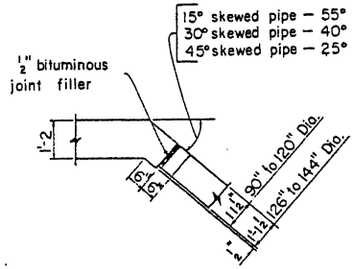

DETAIL C

NOTE:
When straight anchor bolt will not fit in headwall use alternate anchor bolt.

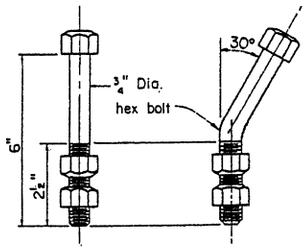

ANCHOR BOLT DETAIL

ALTERNATE ANCHOR BOLT DETAIL

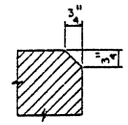

Chamfer all exposed corners as shown unless otherwise noted. This note applicable to all sheets.

CHAMFER DETAIL

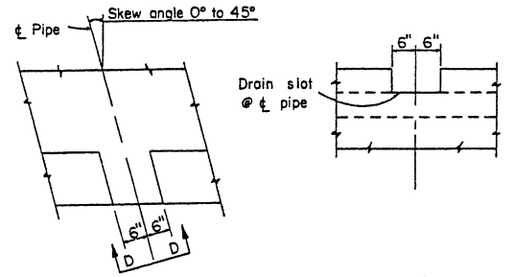

PLAN

ELEVATION D-D

APRON DRAIN DETAIL

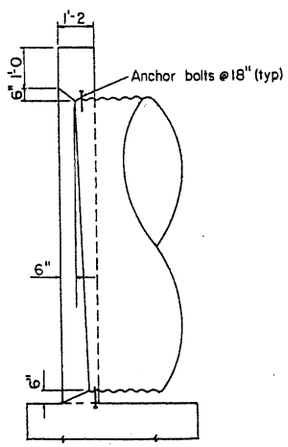

Outlet End

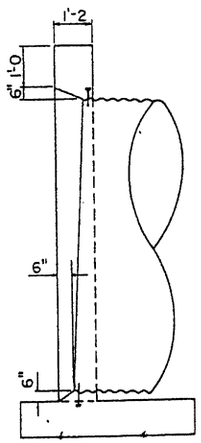

Inlet End

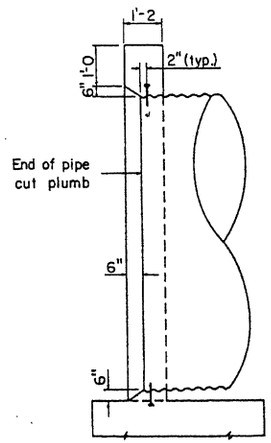

Outlet or Inlet End

DETAIL D

DETAIL E

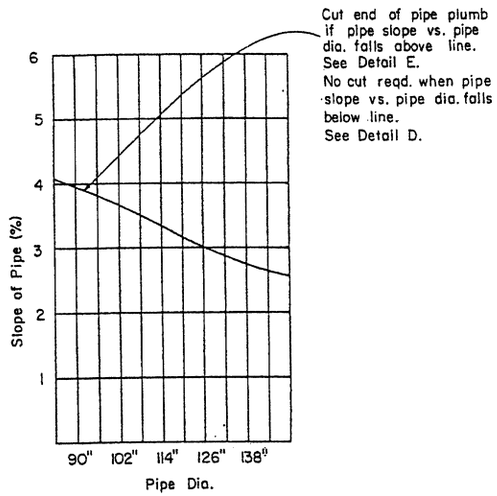

CHART

(Use to determine treatment at end of pipe)

GENERAL NOTES

Design– AASHO St'd Spec's for Highway Bridges 1973.

Construction– St'd Spec's Arizona Highway Department Edition of 1969, revised to date.
All concrete shall be Class A.
Reinforcing steel shall conform to ASTM Spec's A615, Grade 40.
All bend dimensions for reinforcing steel shall be out to out of bars.
Dimensions shall not be scaled from drawings.
All reinforcing steel shall have 2" clear cover unless noted otherwise.
Stresses– Class A concrete f_c = 1000 psi;
Reinforcing steel f_s = 20,000 psi.
Bolt material shall conform to ASTM Spec's A307.
Bolts shall be galvanized to conform to ASTM Specs. A153.

When end of pipe is cut to fit skew or slope, disturbed area of pipe shall be treated in accordance with requirements of the Standard Spec's.

DESIGN	K.W.	9-72	NO.	DESCRIPTION OF REVISIONS	MADE BY	DATE
DRAWN	L.A.M.	9-72	①	Added Alt. Bolt Detail	W.S.K. Lee	2-11-75
CHECKED	R.L.C.	9-72	②	Wall Thicknesses	G.H.	7-14-76
			③			

DESIGN APPROVED R.C. Buchli	STATE OF ARIZONA DEPARTMENT OF TRANSPORTATION DIVISION OF HIGHWAYS STANDARD DRAWINGS	REVISION 7-14-76
APPROVED FOR DISTRIBUTION	PIPE CULVERT HEADWALLS MISCELLANEOUS DETAILS	STANDARD NO. PH-1 DRAWING NO. B-11.01

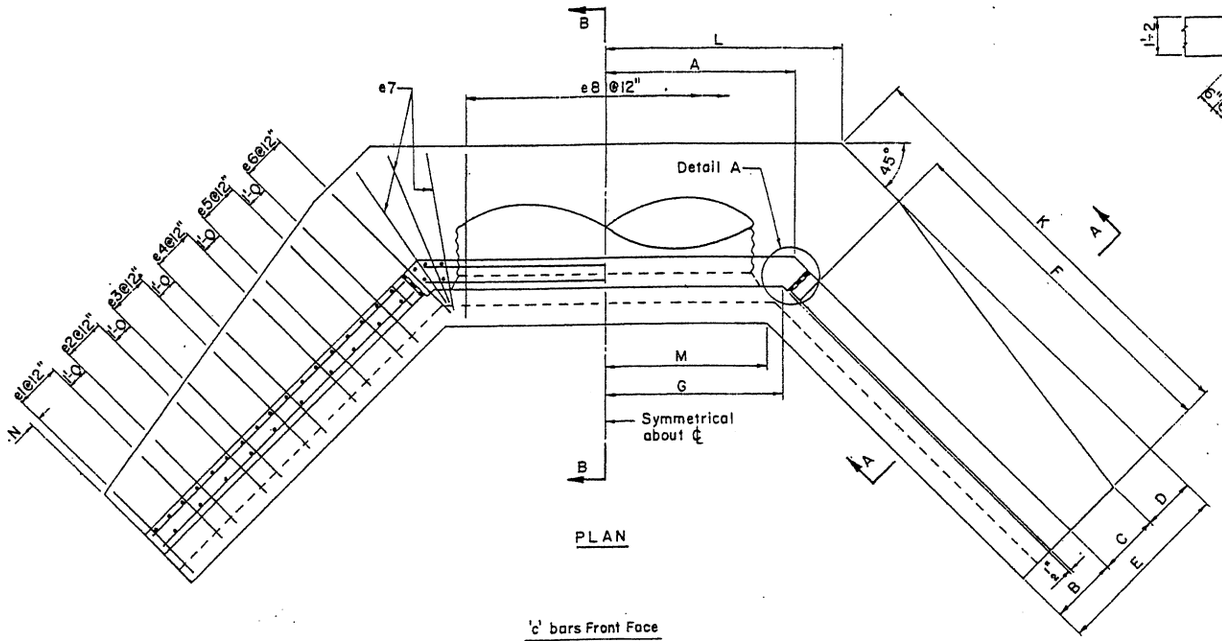

PLAN

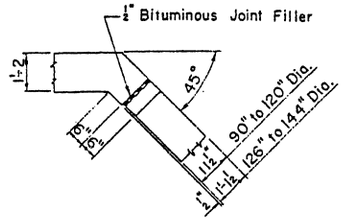

DETAIL A

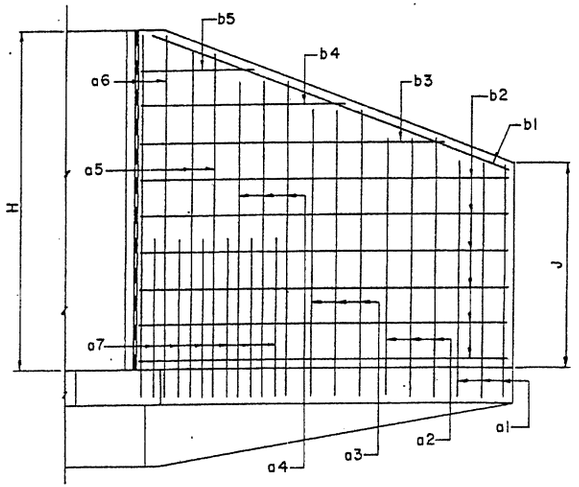

Back Face
WING ELEVATION

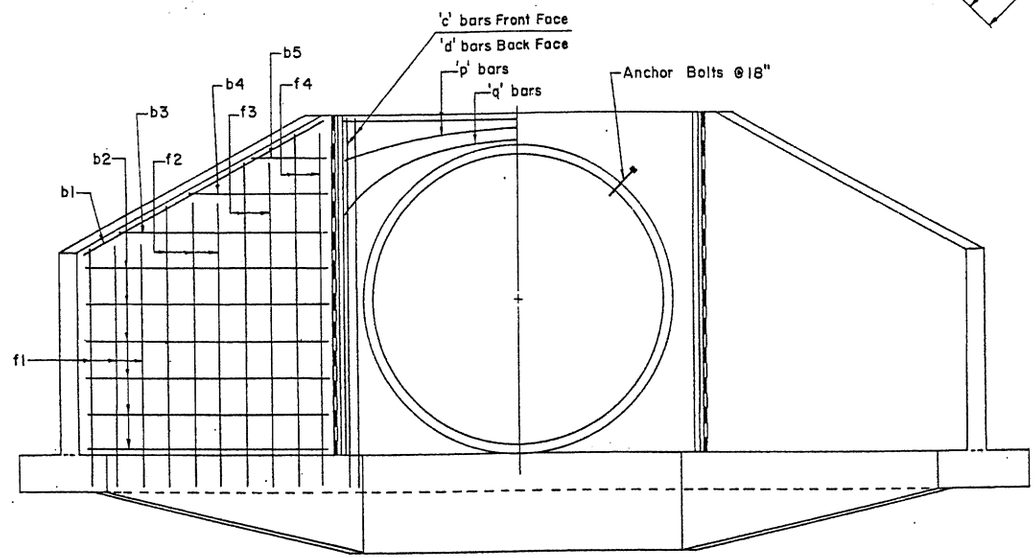

ELEVATION

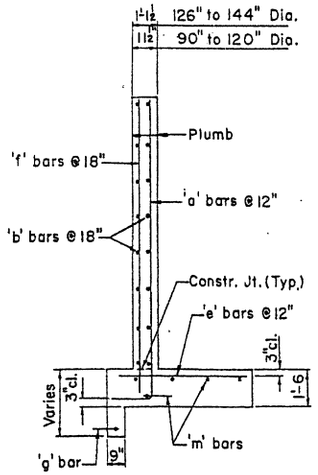

SECTION A-A

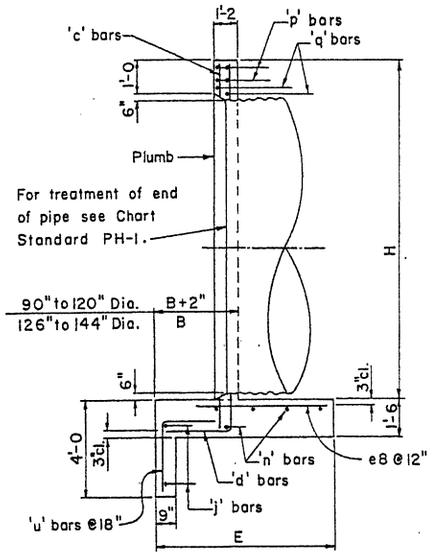

SECTION B-B

Notes: For General Notes and Misc. Details see Std. PH-1.
For steel list and bend diagrams see Std. PH-4, PH-5, or PH-6.

DESIGN	K. W.	9-72	NO.	DESCRIPTION OF REVISIONS	MADE BY	DATE
DRAWN	G. H.	9-72	1	Wall Thicknesses	G. H.	7-14-76
CHECKED	R.L.C.	9-72	2			
			3			

DESIGN APPROVED R.C. Buehler	STATE OF ARIZONA DEPARTMENT OF TRANSPORTATION DIVISION OF HIGHWAYS STANDARD DRAWINGS	REVISION 7-14-76
APPROVED FOR DISTRIBUTION	INLET HEADWALL RIGHT ANGLE PIPE CULVERT	STANDARD NO. PH-2 DRAWING NO. B-12.01

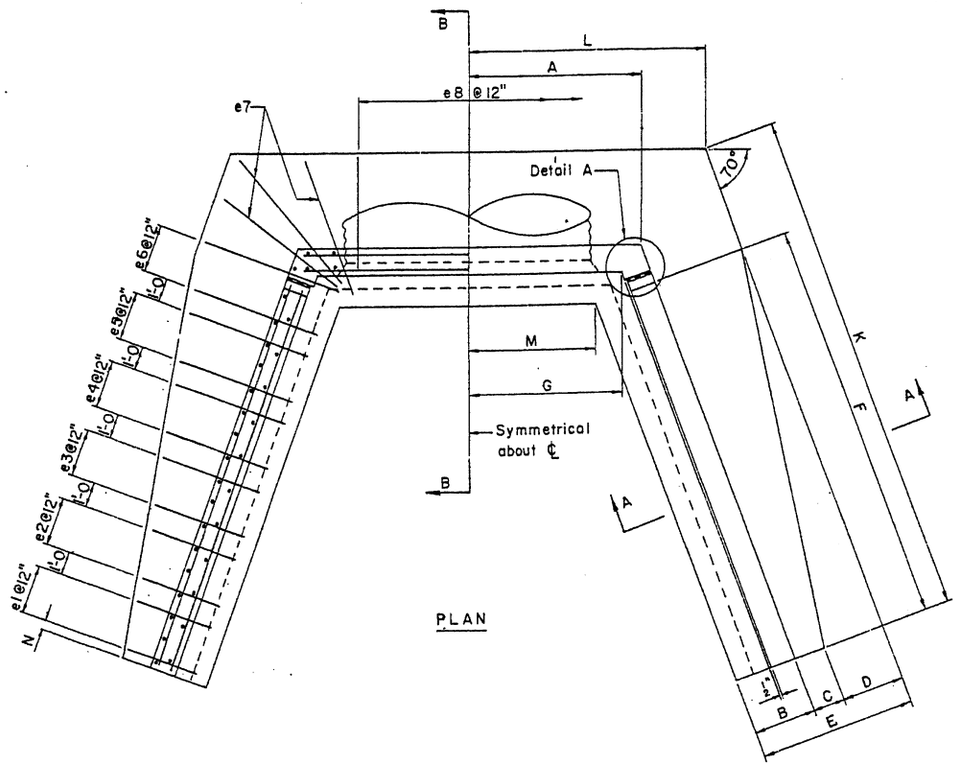

PLAN

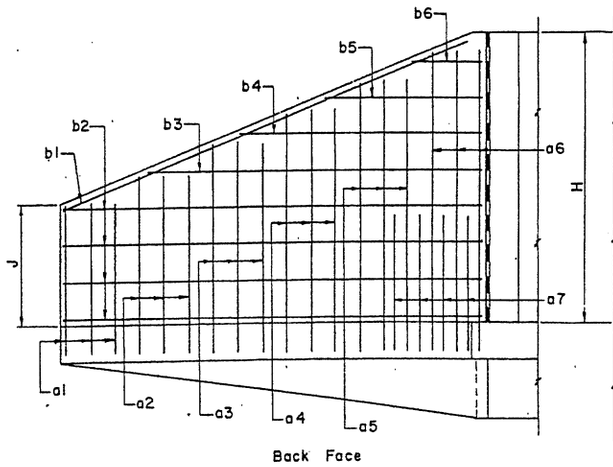

WING ELEVATION

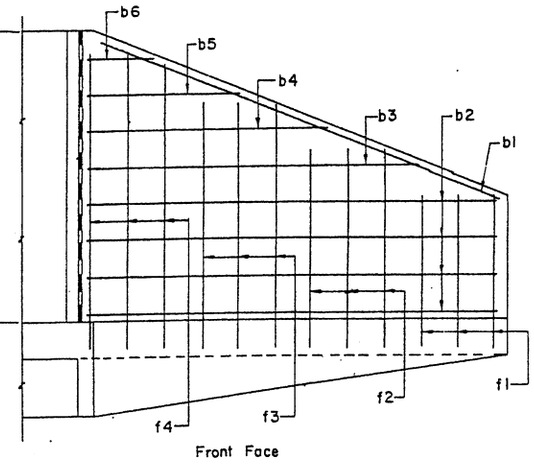

WING ELEVATION

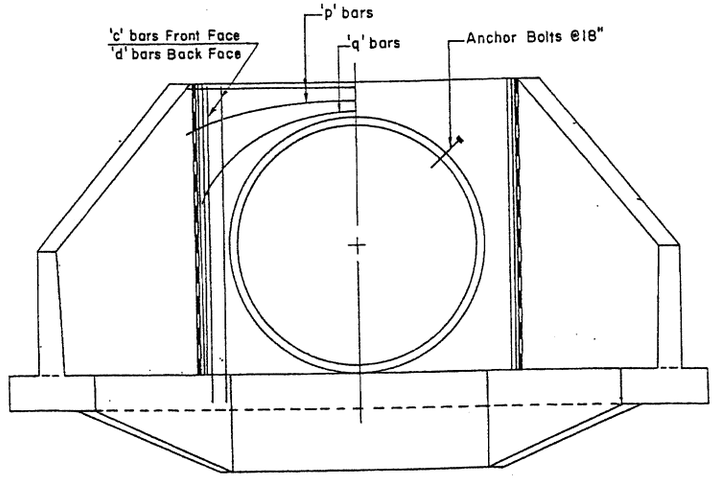

ELEVATION

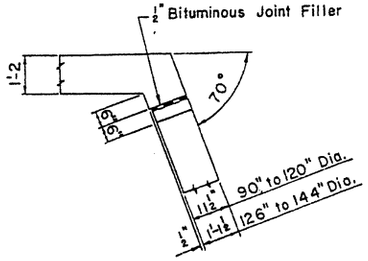

DETAIL A

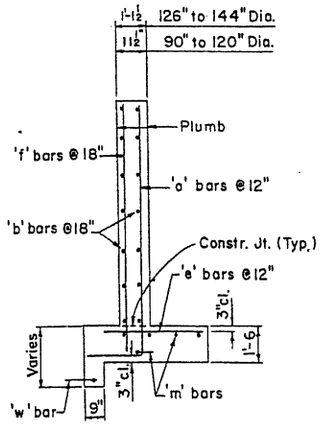

SECTION A-A

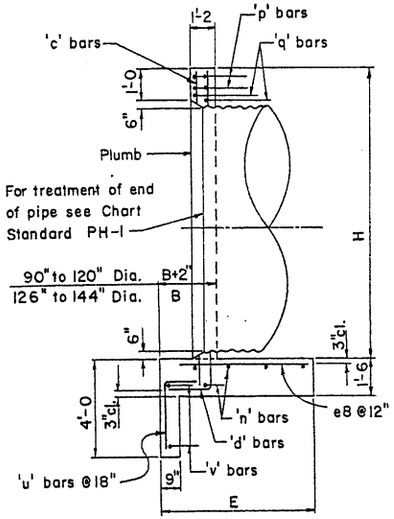

SECTION B-B

Notes: For General Notes and Misc. Details see Std. PH-1.
For steel list and bend diagrams see Std. PH-4, PH-5, or PH-6.

DESIGN	K.W.	9-72	NO.	DESCRIPTION OF REVISIONS	MADE BY	DATE
DRAWN	G.H.	9-72	1	Wall Thicknesses	G.H.	7-14-76
CHECKED	R.L.C.	9-72	2			
			3			

DESIGN APPROVED	STATE OF ARIZONA DEPARTMENT OF TRANSPORTATION DIVISION OF HIGHWAYS STANDARD DRAWINGS	REVISION 7-14-76
APPROVED FOR DISTRIBUTION	OUTLET HEADWALL RIGHT ANGLE PIPE CULVERT	STANDARD NO. PH-3 DRAWING NO. B-12.02

STEEL LIST - INLET END

Mark	Bend	90" Dia			96" Dia			102" Dia			108" Dia			114" Dia			120" Dia			126" Dia			132" Dia			138" Dia			144" Dia		
		No	Size	Lgth	No	Size	Lgth	No	Size	Lgth	No	Size	Lgth	No	Size	Lgth	No	Size	Lgth	No	Size	Lgth	No	Size	Lgth	No	Size	Lgth	No	Size	Lgth
a1	A	6	#5	8-6	6	#5	9-0	6	#5	9-3	6	#5	9-6	6	#5	10-0	6	#5	10-3	6	#6	10-6	6	#6	10-9	6	#6	11-3	6	#6	11-6
a2	A	6	#5	9-6	6	#5	10-0	6	#5	10-3	6	#5	10-6	6	#6	11-0	6	#6	11-3	6	#6	11-6	6	#7	11-9	6	#7	12-6	6	#7	12-6
a3	A	6	#5	10-6	6	#6	11-0	6	#6	11-3	6	#6	11-6	6	#6	12-0	6	#7	12-3	6	#7	12-9	6	#7	13-0	6	#8	13-6	6	#8	13-9
a4	A	6	#6	11-9	6	#6	12-0	4	#7	12-3	6	#7	12-6	6	#7	13-0	6	#7	13-3	6	#8	13-9	6	#8	14-0	6	#8	14-6	6	#8	14-9
a5	A							4	#7	13-0	4	#8	13-6	4	#8	14-0	6	#8	14-3	6	#8	14-9	4	#8	15-0	4	#8	15-6	6	#8	15-9
a6	A																						4	#8	15-9	4	#8	16-3	4	#8	17-0
a7	A																						8	#4	5-0	8	#4	5-6	10	#4	6-0
b1	str	4	#4	11-6	4	#4	12-0	4	#4	12-6	4	#4	13-3	4	#4	14-0	4	#4	14-6	4	#4	15-0	4	#4	15-9	4	#4	16-3	4	#4	16-9
b2	str	16	#4	11-0	16	#4	11-6	16	#4	12-0	20	#4	12-9	20	#4	13-6	20	#4	14-0	20	#4	14-6	20	#4	15-0	24	#4	15-6	24	#4	16-0
b3	str	4	#4	8-6	4	#4	10-3	4	#4	11-6	4	#4	9-0	4	#4	10-3	4	#4	11-9	4	#4	13-6	4	#4	14-6	4	#4	11-6	4	#4	13-0
b4	str	4	#4	4-0	4	#4	6-3	4	#4	7-3	4	#4	4-9	4	#4	6-0	4	#4	7-6	4	#4	8-9	4	#4	10-3	4	#4	7-3	4	#4	8-9
b5	str				4	#4	2-0	4	#4	3-9				4	#4	2-0	4	#4	3-9	4	#4	5-0	4	#4	6-6	4	#4	3-9	4	#4	5-0
c	str	4	#4	10-6	4	#4	11-0	4	#4	11-6	4	#4	12-0	4	#4	12-6	4	#4	13-0	4	#4	13-6	4	#4	14-0	4	#4	14-6	4	#4	15-0
d	A	6	#6	12-3	6	#6	12-9	6	#7	13-3	6	#8	13-9	6	#8	14-6	6	#8	15-0	6	#8	15-6	6	#8	16-0	6	#8	16-6	6	#8	17-0
e1	str	6	#4	2-9	6	#4	3-0	6	#4	3-0	6	#4	3-3	6	#4	3-6	6	#4	3-6	6	#4	3-9	6	#4	3-9	6	#4	4-0	6	#5	4-3
e2	str	6	#4	3-3	6	#4	3-6	6	#4	3-9	6	#4	4-0	6	#4	4-0	6	#4	4-0	6	#5	4-3	6	#5	4-6	6	#5	4-6	6	#5	4-9
e3	str	6	#4	4-0	6	#5	4-3	6	#5	4-3	6	#5	4-6	6	#5	4-6	6	#5	4-9	6	#6	4-9	6	#6	5-0	6	#6	5-3	6	#6	5-3
e4	str	6	#5	4-6	6	#5	4-9	6	#5	4-6	6	#6	4-9	6	#6	5-0	6	#6	5-0	6	#7	5-3	6	#7	5-6	6	#7	5-9	6	#7	5-9
e5	str							4	#5	4-9	4	#6	5-0	6	#6	5-3	6	#6	5-6	6	#7	5-9	8	#7	6-0	6	#8	6-0	6	#8	6-3
e6	str																									4	#8	6-3	4	#8	6-9
e7	str	4	#5	4-6	4	#5	4-9	4	#5	4-9	4	#6	5-0	4	#6	5-3	6	#6	5-6	6	#7	6-0	6	#7	6-0	6	#8	6-3	6	#8	6-9
e8	str	9	#5	4-6	10	#5	4-9	10	#5	4-9	11	#6	5-0	11	#6	5-3	11	#6	5-6	12	#7	6-0	13	#7	6-0	12	#8	6-3	13	#8	6-9
f1	str	6	#4	6-9	6	#4	7-3	6	#4	7-6	6	#4	7-9	6	#4	8-0	6	#4	8-3	6	#4	8-6	6	#4	9-0	6	#4	9-3	6	#4	9-6
f2	str	6	#4	8-6	6	#4	8-9	6	#4	9-0	6	#4	9-6	6	#4	9-6	6	#4	10-0	6	#4	10-0	6	#4	10-6	6	#4	10-9	6	#4	11-0
f3	str	4	#4	10-0	4	#4	10-3	6	#4	10-6	6	#4	11-0	4	#4	11-0	4	#4	11-6	6	#4	11-6	6	#4	12-0	6	#4	12-6	6	#4	12-6
f4	str													4	#4	12-3	4	#4	12-6	4	#4	13-3	4	#4	13-9	4	#4	14-0	6	#4	14-3
g	str	2	#4	11-6	2	#4	12-0	2	#4	12-6	2	#4	13-0	2	#4	13-6	2	#4	14-0	2	#4	14-6	2	#4	15-0	2	#4	15-6	2	#4	16-0
u	B	7	#4	4-6	7	#4	4-9	8	#4	4-9	8	#4	4-9	8	#4	4-9	8	#4	5-0	9	#4	5-0	9	#4	5-0	9	#4	5-0	10	#4	5-0
j	str	2	#4	9-3	2	#4	9-9	2	#4	10-3	2	#4	10-9	2	#4	11-3	2	#4	11-9	2	#4	12-3	2	#4	12-6	2	#4	13-0	2	#4	13-6
m	str	8	#4	11-9	8	#4	12-6	8	#4	13-0	8	#4	13-6	10	#4	14-6	10	#4	15-3	10	#4	16-0	10	#4	16-6	10	#4	17-0	10	#4	17-9
n	str	5	#4	11-6	5	#4	11-6	5	#4	12-0	5	#4	13-0	5	#4	13-0	5	#4	13-6	5	#4	14-0	5	#4	14-6	5	#4	15-0	5	#4	16-0
p	str	4	#5	10-0	4	#5	10-6	4	#5	11-0	4	#5	11-6	4	#5	12-0	4	#5	12-6	4	#5	13-0	4	#5	13-6	4	#5	14-0	4	#5	14-6
q	str	2	#6	12-0	2	#6	12-6	2	#6	13-0	2	#6	13-6	2	#6	14-0	2	#6	14-6	2	#6	15-0	2	#6	15-6	2	#6	16-0	2	#6	16-6

STEEL LIST - OUTLET END

Mark	Bend	90" Dia			96" Dia			102" Dia			108" Dia			114" Dia			120" Dia			126" Dia			132" Dia			138" Dia			144" Dia		
		No	Size	Lgth	No	Size	Lgth	No	Size	Lgth	No	Size	Lgth	No	Size	Lgth	No	Size	Lgth	No	Size	Lgth	No	Size	Lgth	No	Size	Lgth	No	Size	Lgth
a1	A	6	#4	7-0	6	#4	7-3	6	#4	7-3	6	#4	7-6	6	#4	8-0	6	#4	8-0	6	#4	8-3	6	#4	8-6	6	#4	8-9	6	#5	9-3
a2	A	6	#4	8-6	6	#4	8-6	6	#4	8-9	6	#4	8-9	6	#5	9-6	6	#5	9-6	6	#5	9-9	6	#5	10-0	6	#5	10-3	6	#6	10-9
a3	A	6	#5	9-9	6	#5	10-0	6	#5	10-3	6	#5	10-3	6	#6	10-9	6	#6	11-0	6	#6	11-3	6	#6	11-6	6	#6	11-9	6	#7	12-0
a4	A	6	#6	11-3	4	#6	11-6	6	#6	11-9	6	#6	11-9	6	#7	12-3	6	#7	12-3	6	#7	12-6	6	#7	12-9	6	#7	13-0	6	#8	13-6
a5	A				4	#7	12-6	4	#7	13-0	4	#7	13-3	6	#8	13-9	4	#8	13-6	4	#8	14-0	6	#8	14-0	6	#8	14-6	6	#8	15-0
a6	A																4	#8	14-6	4	#8	15-0	4	#8	15-6	4	#8	16-0	6	#8	16-6
a7	A																			4	#4	4-6	6	#4	5-0	10	#4	5-6	12	#4	6-0
b1	str.	4	#4	12-6	4	#4	13-0	4	#4	14-0	4	#4	14-9	4	#4	15-6	4	#4	16-6	4	#4	16-9	4	#4	17-6	4	#4	18-0	4	#4	18-6
b2	str.	12	#4	11-6	12	#4	12-0	16	#4	12-9	12	#4	13-6	16	#4	14-3	16	#4	15-0	16	#4	15-6	16	#4	16-0	16	#4	16-6	20	#4	17-0
b3	str.	4	#4	10-3	4	#4	11-3	4	#4	9-0	4	#4	13-3	4	#4	11-6	4	#4	12-3	4	#4	13-6	4	#4	14-6	4	#4	15-6	4	#4	13-6
b4	str.	4	#4	7-0	4	#4	8-0	4	#4	6-0	4	#4	10-3	4	#4	8-3	4	#4	9-3	4	#4	10-3	4	#4	11-3	4	#4	12-3	4	#4	10-3
b5	str.	4	#4	3-9	4	#4	4-9	4	#4	2-9	4	#4	7-0	4	#4	5-0	4	#4	6-0	4	#4	7-0	4	#4	8-3	4	#4	9-0	4	#4	7-0
b6	str.										4	#4	3-9				4	#4	2-6	4	#4	3-9	4	#4	5-0	4	#4	6-0	4	#4	3-9
c	str.	4	#4	10-6	4	#4	11-0	4	#4	11-6	4	#4	12-0	4	#4	12-6	4	#4	13-0	4	#4	13-6	4	#4	14-0	4	#4	14-6	4	#4	15-0
d	A	6	#6	12-3	6	#7	12-9	6	#7	13-3	6	#7	13-9	6	#8	14-6	6	#8	15-0	6	#8	15-6	6	#8	16-0	6	#8	16-6	6	#8	17-0
e1	str.	6	#4	1-9	6	#4	2-0	6	#4	2-0	6	#4	2-0	6	#4	2-3	6	#4	2-3	6	#4	2-3	6	#4	2-6	6	#4	2-6	6	#4	2-9
e2	str.	6	#4	2-6	6	#4	2-6	6	#4	2-9	6	#4	2-9	6	#4	2-9	6	#4	3-0	6	#4	3-0	6	#4	3-3	6	#4	3-3	6	#4	3-6
e3	str.	6	#4	3-3	6	#4	3-3	6	#4	3-3	6	#4	3-6	6	#4	3-6	6	#4	3-9	6	#5	3-9	6	#5	4-0	6	#5	4-0	6	#5	4-3
e4	str.	4	#4	3-9	4	#4	4-0	6	#5	4-0	6	#5	4-3	6	#5	4-3	6	#5	4-3	6	#6	4-6	6	#6	4-9	6	#6	4-9	6	#6	4-9
e5	str.	4	#4	4-3	4	#5	4-6	4	#5	4-9	6	#6	4-9	6	#6	5-0	4	#6	5-0	6	#7	5-0	6	#7	5-3	6	#7	5-3	6	#7	5-6
e6	str.																4	#7	5-6	4	#7	5-9	4	#7	6-0	6	#8	6-0	6	#8	6-3
e7	str.	4	#4	4-3	4	#5	4-6	4	#5	4-9	4	#6	4-9	6	#6	5-0	6	#7	5-6	6	#7	5-9	6	#7	6-0	6	#8	6-0	6	#8	6-3
e8	str.	8	#4	4-3	8	#5	4-6	9	#5	4-9	9	#6	4-9	10	#6	5-0	10	#7	5-6	10	#7	5-9	10	#7	6-0	11	#8	6-0	12	#8	6-3
f1	str.	6	#4	5-6	6	#4	5-6	6	#4	6-0	6	#4	5-9	6	#4	6-3	6	#4	6-3	6	#4	6-6	6	#4	6-9	6	#4	7-0	6	#4	7-3
f2	str.	6	#4	7-6	6	#4	7-9	6	#4	8-0	6	#4	8-0	6	#4	8-3	6	#4	8-3	6	#4	8-9	6	#4	9-0	6	#4	9-0	6	#4	9-6
f3	str.	6	#4	9-6	6	#4	9-9	6	#4	10-3	4	#4	10-0	4	#4	10-6	6	#4	10-6	6	#4	10-9	6	#4	11-3	6	#4	11-3	6	#4	11-6
f4	str.										4	#4	11-6	4	#4	11-9	4	#4	12-6	4	#4	13-0	4	#4	13-3	6	#4	13-3	6	#4	13-9
u	B	6	#4	4-6	6	#4	4-9	7	#4	4-9	7	#4	4-9	7	#4	4-9	8	#4	5-0	8	#4	5-0	8	#4	5-0	8	#4	5-0	9	#4	5-0
m	str.	8	#4	14-6	8	#4	14-9	8	#4	15-9	8	#4	16-6	8	#4	17-3	8	#4	18-3	8	#4	18-9	10	#4	19-6	10	#4	20-6	10	#4	21-6
n	str.	5	#4	12-6	5	#4	13-6	5	#4	14-0	5	#4	14-6	5	#4	15-0	5	#4	16-0	5	#4	17-0	5	#4	18-0	5	#4	17-0	5	#4	18-0
p	str.	4	#5	10-0	4	#5	10-6	4	#5	11-0	4	#5	11-6	4	#5	12-0	4	#5	12-6	4	#5	13-0	4	#5	13-6	4	#5	14-0	4	#5	14-6
q	str.	2	#6	12-0	2	#6	12-6	2	#6	13-0	2	#6	13-6	2	#6	14-0	2	#6	14-6	2	#6	15-0	2	#6	15-6	2	#6	16-0	2	#6	16-6
v	str.	2	#4	8-6	2	#4	9-0	2	#4	9-3	2	#4	9-9	2	#4	10-3	2	#4	10-9	2	#4	11-3	2	#4	11-9	2	#4	12-0	2	#4	12-6
w	str.	2	#4	12-0	2	#4	12-6	2	#4	13-3	2	#4	13-9	2	#4	14-6	2	#4	15-3	2	#4	15-9	2	#4	16-3	2	#4	16-9	2	#4	17-3

Pipe Dia	DIMENSIONS INLET END												
	A	B	C	D	E	F	G	H	J	K	L	M	N
90"	5-2	2-1	1-7	1-5	5-1	11-0	4-11	9-6	5-8	13-7 7/8	6-6 7/8	4-5 5/8	0-3
96"	5-5	2-2	1-8	1-6	5-4	11-6	5-2	10-0	6-0	14-2 3/4	6-10 3/4	4-8 1/4	0-6
102"	5-8	2-2	1-10	1-7	5-7	12-0	5-5	10-6	6-3	14-10	7-3	4-11 1/4	0-3
108"	5-11	2-3	1-11	1-8	5-10	12-9	5-8	11-0	6-7	15-7 3/4	7-6 7/8	5-1 3/4	0-1 1/2
114"	6-2	2-3	2-1	1-9	6-1	13-6	5-11	11-6	6-10	16-6	7-11	5-4 3/4	0-6
120"	6-5	2-4	2-2	1-10	6-4	14-0	6-2	12-0	7-1	17-0 7/8	8-2 7/8	5-7 3/8	0-3
126"	6-10 3/4	2-6	2-2	1-11	6-7	14-6	6-5	12-6	7-5	17-8	8-7 1/8	5-10 3/8	0-6
132"	7-1 3/4	2-7	2-3	2-0	6-10	15-0	6-8	13-0	7-9	18-2 7/8	8-10 7/8	6-1	0-3
138"	7-4 3/4	2-7	2-5	2-1	7-1	15-6	6-11	13-6	8-0	18-10 1/4	9-3 1/8	6-4	0-6
144"	7-7 3/4	2-8	2-6	2-2	7-4	16-0	7-2	14-0	8-4	19-5	9-7	6-6 1/2	0-3

Pipe Dia	DIMENSIONS OUTLET END												
	A	B	C	D	E	F	G	H	J	K	L	M	N
90"	5-6 5/8	2-1	0-11	2-1	5-1	11-6	4-11	9-6	4-2	15-3 5/8	7-8 5/8	4-1 7/8	0-6
96"	5-9 5/8	2-2	0-11	2-3	5-4	12-0	5-2	10-0	4-4	15-11	8-1	4-4 1/4	0-3
102"	6-0 5/8	2-2	1-0	2-5	5-7	12-9	5-5	10-6	4-6	16-10 1/8	8-6 1/8	4-7 1/4	0-1 1/2
108"	6-3 5/8	2-3	1-1	2-6	5-10	13-6	5-8	11-0	4-8	17-8 1/2	8-10 1/2	4-9 1/2	0-6
114"	6-6 5/8	2-3	1-2	2-8	6-1	14-3	5-11	11-6	4-10	18-7 5/8	9-3 5/8	5-0 1/2	0-4 1/2
120"	6-9 5/8	2-4	1-3	2-9	6-4	15-0	6-2	12-0	5-0	19-6	9-8	5-2 3/4	0-3
126"	7-2 3/4	2-6	1-3	2-10	6-7	15-6	6-5	12-6	5-3	10-2 1/8	10-1 1/8	5-5 3/4	0-6
132"	7-5 3/4	2-6	1-4	3-0	6-10	16-0	6-8	13-0	5-6	20-10 1/4	10-6 1/4	5-8 3/4	0-3
138"	7-8 3/4	2-7	1-5	3-1	7-1	16-6	6-11	13-6	5-9	21-5 5/8	10-10 5/8	5-11 1/8	0-6
144"	7-11 3/4	2-8	1-6	3-2	7-4	17-0	7-2	14-0	6-0	22-1	11-3	6-1 3/8	0-3

QUANTITIES

Pipe Dia.	Inlet		Outlet	
	Reinf. (lbs)	Conc. (CY)	Reinf. (lbs)	Conc. (CY)
90"	1050	19.44	995	19.74
96"	1160	21.19	1175	21.36
102"	1375	23.00	1295	23.42
108"	1645	25.19	1415	25.54
114"	1815	27.49	1770	27.79
120"	2020	29.50	2010	30.10
126"	2330	34.35	2165	34.87
132"	2590	36.74	2365	37.27
138"	2870	39.22	2580	39.72
144"	3120	41.75	2955	42.23

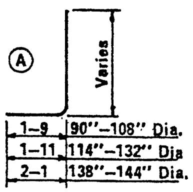

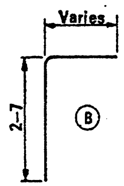

DESIGN KW 9-72 | DRAWN LAM 9-72 | CHECKED RLC 9-72

DESIGN APPROVED R.C. Brechler	STATE OF ARIZONA DEPARTMENT OF TRANSPORTATION DIVISION OF HIGHWAYS STANDARD DRAWINGS	REVISION 7-76
APPROVED FOR DISTRIBUTION	INLET AND OUTLET HEADWALLS RIGRT ANGLE PIPE CULVERT 2:1 SLOPE	STANDARD NO. PH-4 DRAWING NO. B-12.03

STEEL LIST - INLET END

Mark	Bend	90" Dia			96" Dia			102" Dia			108" Dia			114" Dia			120" Dia			126" Dia			132" Dia			138" Dia			144" Dia		
		No	Size	Lgth	No	Size	Lgth	No	Size	Lgth	No	Size	Lgth	No	Size	Lgth	No	Size	Lgth	No	Size	Lgth	No	Size	Lgth	No	Size	Lgth	No	Size	Lgth
a1	A	8	#5	10-0	6	#5	11-3	8	#5	10-9	8	#6	11-0	8	#6	11-6	6	#6	12-0	8	#6	12-3	8	#7	12-9	8	#7	13-3	8	#8	13-9
a2	A	8	#5	10-9	6	#5	11-0	6	#6	11-6	6	#6	11-9	8	#6	12-3	6	#6	12-6	6	#7	13-0	6	#7	13-6	8	#8	14-0	8	#8	14-6
a3	A	6	#6	11-6	6	#6	11-6	6	#6	12-0	6	#7	12-3	6	#7	13-0	6	#7	13-0	6	#7	13-6	6	#8	14-0	6	#8	14-9	8	#8	15-0
a4	A	6	#6	12-0	6	#6	12-0	6	#7	12-6	6	#7	13-0	6	#8	13-9	6	#8	13-9	6	#8	14-3	6	#8	14-6	6	#8	15-3	6	#8	15-9
a5	A				6	#7	12-6	6	#7	13-0	6	#8	13-6	6	#8	14-3	6	#8	14-3	6	#8	14-9	6	#8	15-3	6	#8	15-9	6	#8	16-3
a6	A																6	#8	14-9	6	#8	15-3	6	#8	15-9	6	#8	16-3	6	#8	16-9
a7	A																			6	#4	4-6	12	#4	5-0	18	#4	5-6	26	#4	6-0
b1	str	4	#4	13-6	4	#4	14-3	4	#4	15-0	4	#4	15-9	4	#4	16-6	4	#4	17-3	4	#4	18-0	4	#4	18-9	4	#4	19-6	4	#4	20-3
b2	str	20	#4	13-3	20	#4	14-0	24	#4	14-9	24	#4	15-6	24	#4	16-3	24	#4	17-0	28	#4	17-9	28	#4	18-6	28	#4	19-3	28	#4	20-0
b3	str	4	#4	9-0	4	#4	11-0	4	#4	6-3	4	#4	9-0	4	#4	11-9	4	#4	14-9	4	#4	8-9	4	#4	3-6	4	#4	14-9	4	#4	17-6
b4	str				4	#4	3-0							4	#4	3-6	4	#4	6-0							4	#4	6-0	4	#4	9-0
b5	str																														
c	str	4	#4	10-6	4	#4	11-0	4	#4	11-6	4	#4	12-0	4	#4	12-6	4	#4	13-0	4	#4	13-6	4	#4	14-0	4	#4	14-6	4	#4	15-0
d	A	6	#6	12-3	6	#7	12-9	6	#7	13-3	6	#8	13-9	6	#8	14-6	6	#8	15-0	6	#8	15-6	6	#8	16-0	6	#8	16-6	6	#8	17-0
e1	str	8	#4	3-9	6	#4	4-0	8	#4	4-0	8	#4	4-3	8	#4	4-6	6	#5	4-6	8	#5	4-9	8	#5	5-0	8	#5	5-3	8	#5	5-6
e2	str	8	#4	4-0	6	#4	4-3	6	#4	4-3	6	#4	4-6	8	#5	4-9	6	#5	4-9	6	#5	5-0	6	#5	5-3	8	#6	5-6	8	#6	5-9
e3	str	6	#4	4-3	12	#4	4-6	6	#4	4-6	6	#5	4-9	6	#5	5-0	6	#5	5-0	6	#5	5-3	6	#6	5-6	6	#6	5-9	8	#7	6-0
e4	str	6	#4	4-6	6	#5	4-9	6	#5	4-9	6	#5	5-0	6	#5	5-3	6	#5	5-3	6	#6	5-6	6	#6	5-9	6	#7	6-0	6	#7	6-3
e5	str							6	#5	5-0	6	#5	5-3	6	#6	5-6	6	#6	5-6	6	#6	5-9	6	#7	6-0	6	#7	6-3	6	#7	6-6
e6	str																6	#6	5-9	6	#7	6-0	6	#7	6-3	6	#7	6-6	6	#8	6-9
e7	str	4	#4	4-6	4	#5	4-9	4	#5	5-0	4	#5	5-3	6	#6	5-6	6	#6	5-9	6	#7	6-0	6	#7	6-3	6	#7	6-6	6	#8	6-9
e8	str	10	#4	4-6	10	#5	4-9	11	#5	5-0	11	#5	5-3	12	#6	5-6	12	#6	5-9	13	#7	6-0	13	#7	6-3	13	#7	6-6	14	#8	6-9
f1	str	8	#4	8-3	8	#4	8-6	8	#4	9-0	8	#4	9-3	6	#4	9-9	6	#4	10-0	8	#4	10-6	8	#4	10-9	8	#4	11-3	8	#4	11-6
f2	str	6	#4	9-3	6	#4	9-6	8	#4	10-0	8	#4	10-6	6	#4	10-6	6	#4	11-0	6	#4	11-6	6	#4	12-0	8	#4	12-3	8	#4	12-9
f3	str	6	#4	10-3	6	#4	10-6	6	#4	11-3	6	#4	11-6	6	#4	11-3	6	#4	11-9	6	#4	12-3	6	#4	12-9	6	#4	13-3	6	#4	13-6
f4	str													6	#4	12-0	6	#4	12-6	6	#4	13-0	6	#4	13-6	6	#4	14-0	6	#4	14-6
g	str	2	#4	12-6	2	#4	13-6	2	#4	14-0	2	#4	14-6	2	#4	15-3	2	#4	16-0	2	#4	16-9	2	#4	17-3	2	#4	18-0	2	#4	18-6
u	B	7	#4	4-6	7	#4	4-9	8	#4.	4-9	8	#4	4-9	8	#4	4-9	8	#4	5-0	9	#4	5-0	9	#4	5-0	9	#4	5-0	10	#4	5-0
j	str	2	#4	9-3	2	#4	9-6	2	#4	10-0	2	#4	10-6	2	#4	11-0	2	#4	11-6	2	#4	12-0	2	#4	12-6	2	#4	13-0	2	#4	13-6
m	str	8	#4	16-0	8	#4	16-6	8	#4	17-6	8	#4	18-6	8	#4	19-0	8	#4	20-0	8	#4	21-0	10	#4	21-9	10	#4	22-6	10	#4	23-6
n	str	5	#4	12-9	5	#4	13-6	5	#4	14-0	5	#4	14-6	5	#4	15-3	5	#4	16-0	5	#4	16-6	5	#4	17-3	5	#4	18-0	5	#4	18-9
p	str	4	#5	10-0	4	#5	10-6	4	#5	11-0	4	#5	11-6	4	#5	12-0	4	#5	12-6	4	#5	13-0	4	#5	13-6	4	#5	14-0	4	#5	14-6
q	str	2	#6	12-0	2	#6	12-6	2	#6	13-0	2	#6	13-6	2	#6	14-0	2	#6	14-6	2	#6	15-0	2	#6	15-6	2	#6	16-0	2	#6	16-6

STEEL LIST - OUTLET END

Mark	Bend	90" Dia			96" Dia			102" Dia			108" Dia			114" Dia			120" Dia			126" Dia			132" Dia			138" Dia			144" Dia		
		No	Size	Lgth	No	Size	Lgth	No	Size	Lgth	No	Size	Lgth	No	Size	Lgth	No	Size	Lgth	No	Size	Lgth	No	Size	Lgth	No	Size	Lgth	No	Size	Lgth
a1	A	8	#4	9-0	6	#4	9-6	6	#5	9-9	8	#5	10-0	8	#5	10-6	8	#6	11-0	6	#6	11-3	8	#6	11-6	8	#6	12-3	8	#7	12-6
a2	A	8	#5	10-3	6	#5	10-3	6	#5	10-6	6	#6	11-3	8	#6	11-6	8	#6	12-0	6	#6	12-0	6	#7	12-6	6	#7	13-3	8	#8	13-6
a3	A	6	#6	11-3	6	#6	11-0	6	#6	11-6	6	#6	12-0	6	#7	12-6	6	#7	13-0	6	#7	12-9	6	#7	13-3	6	#8	14-0	6	#8	14-6
a4	A	6	#6	12-0	6	#6	11-9	6	#6	12-3	6	#7	12-9	6	#7	13-3	6	#8	13-9	6	#8	13-6	6	#8	14-0	6	#8	14-9	6	#8	15-3
a5	A				4	#7	12-6	6	#7	13-0	6	#7	13-3	6	#8	14-0	6	#8	14-6	6	#8	14-3	6	#8	15-0	6	#8	15-6	6	#8	16-0
a6	A																			6	#8	15-0	6	#8	15-6	6	#8	16-3	6	#8	16-9
a7	A																			6	#4	4-6	10	#4	5-0	12	#4	5-6	18	#4	6-0
b1	str	4	#4	13-3	4	#4	13-9	4	#4	14-9	4	#4	15-6	4	#4	16-3	4	#4	17-0	4	#4	17-9	4	#4	18-3	4	#4	19-0	4	#4	19-6
b2	str	20	#4	13-0	20	#4	13-6	20	#4	14-3	20	#4	15-0	20	#4	15-9	24	#4	16-6	24	#4	17-3	24	#4	17-9	24	#4	18-6	28	#4	19-0
b3	str	4	#4	6-9	4	#4	8-9	4	#4	10-9	4	#4	13-0	4	#4	15-0	4	#4	11-0	4	#4	13-3	4	#4	15-0	4	#4	17-0	4	#4	13-3
b4	str				4	#4	3-0	4	#4	5-0	4	#4	7-0	4	#4	9-0	4	#4	5-0	4	#4	7-0	4	#4	9-0	4	#4	11-0	4	#4	7-3
b5	str													4	#4	3-0							4	#4	3-0	4	#4	5-0			
b6	str																														
c	str	4	#4	10-6	4	#4	11-0	4	#4	11-6	4	#4	12-0	4	#4	12-6	4	#4	13-0	4	#4	13-6	4	#4	14-0	4	#4	14-6	4	#4	15-0
d	A	6	#6	12-3	6	#7	12-9	6	#7	13-3	6	#8	13-9	6	#8	14-6	6	#8	15-0	6	#8	15-6	6	#8	16-0	6	#8	16-6	6	#8	17-0
el	str	8	#4	3-3	8	#4	3-3	8	#4	3-6	8	#4	3-6	10	#4	3-6	8	#4	3-6	8	#4	3-9	8	#4	3-9	8	#4	4-0	8	#5	4-0
e2	str	8	#4	3-6	8	#4	3-6	8	#4	3-9	8	#4	3-9	8	#4	4-0	8	#4	4-0	8	#5	4-3	8	#5	4-3	8	#5	4-6	8	#5	4-6
e3	str	6	#4	3-9	8	#4	4-0	8	#5	4-0	8	#5	4-3	8	#5	4-6	8	#5	4-3	8	#5	4-9	8	#6	4-9	8	#6	5-0	8	#6	5-0
e4	str	6	#4	4-0	6	#5	4-3	6	#5	4-6	8	#5	4-9	8	#6	5-0	6	#6	4-9	6	#6	5-3	8	#6	5-3	8	#7	5-6	8	#7	5-6
e5	str																6	#6	5-3	6	#7	5-9	6	#7	5-9	8	#7	6-0	8	#8	6-3
e6	str																														
e7	str	4	#4	4-0	4	#5	4-3	4	#5	4-6	4	#5	4-9	6	#6	5-0	6	#6	5-3	6	#7	5-9	6	#7	6-0	8	#7	6-3	8	#8	6-6
e8	str	9	#4	4-0	10	#5	4-3	11	#5	4-6	11	#5	4-9	12	#6	5-0	12	#6	5-3	13	#7	5-9	13	#7	6-0	13	#7	6-3	14	#8	6-6
f1	str	6	#4	7-6	8	#4	8-0	8	#4	8-3	8	#4	8-3	8	#4	8-9	6	#4	9-3	6	#4	9-6	8	#4	9-9	8	#4	10-0	8	#4	10-6
f2	str	6	#4	8-9	6	#4	9-0	6	#4	9-9	8	#4	10-0	8	#4	10-3	6	#4	10-3	6	#4	10-6	6	#4	11-3	6	#4	11-6	6	#4	12-0
f3	str	6	#4	9-9	6	#4	10-3	6	#4	10-9	6	#4	11-3	6	#4	11-9	6	#4	11-3	6	#4	11-9	6	#4	12-3	6	#4	12-6	6	#4	13-3
f4	str																6	#4	12-3	6	#4	12-9	6	#4	13-6	6	#4	13-9	6	#4	14-3
u	B	6	#4	4-6	6	#4	4-8	7	#4	4-9	7	#4	4-9	7	#4	4-9	8	#4	5-0	8	#4	5-0	8	#4	5-0	8	#4	5-0	9	#4	5-0
m	str	8	#4	16-6	8	#4	17-3	8	#4	18-0	8	#4	19-0	8	#4	19-9	8	#4	20-9	8	#4	21-9	10	#4	22-3	10	#4	23-3	10	#4	23-9
n	str	5	#4	12-6	5	#4	13-3	5	#4	14-0	5	#4	14-6	5	#4	15-3	5	#4	16-0	5	#4	16-9	5	#4	17-3	5	#4	18-0	5	#4	18-6
p	str	4	#5	10-0	4	#5	10-6	4	#5	11-0	4	#5	11-6	4	#5	12-0	4	#5	12-6	4	#5	13-0	4	#5	13-6	4	#5	14-0	4	#5	14-6
q	str	2	#6	12-0	2	#6	12-6	2	#6	13-0	2	#6	13-6	2	#6	14-0	2	#6	14-6	2	#6	15-0	2	#6	15-6	2	#6	16-0	2	#6	16-6
v	str	2	#4	8-6	2	#4	9-0	2	#4	9-3	2	#4	9-9	2	#4	10-3	2	#4	10-9	2	#4	11-3	2	#4	11-9	2	#4	12-0	2	#4	12-6
w	str	2	#4	13-6	2	#4	14-0	2	#4	14-9	2	#4	15-3	2	#4	16-0	2	#4	16-9	2	#4	17-6	2	#4	18-0	2	#4	18-9	2	#4	19-3

Pipe Dia	DIMENSIONS INLET END: A	B	C	D	E	F	G	H	J	K	L	M	N
90"	5-2	2-0	2-4	0-9	5-1	13-3	4-11	9-6	7-3	15-11 1/4	6-7 1/4	4-6	0-4 1/2
96"	5-5	2-2	2-5	0-9	5-4	14-0	5-2	10-0	7-6	16-8 3/4	6-10 3/4	4-8 1/4	0-3
102"	5-8	2-2	2-6	0-11	5-7	14-9	5-5	10-6	7-11	17-7	7-3	4-11 1/4	0-1 1/2
108"	5-11	2-2	2-8	1-0	5-10	15-6	5-8	11-0	8-3	18-5 1/4	7-7 1/4	5-2 1/4	0-6
114"	6-2	2-3	2-9	1-1	6-1	16-3	5-11	11-6	8-7	19-3	7-11	5-4 3/4	0-4 1/2
120"	6-5	2-4	2-10	1-2	6-4	17-0	6-2	12-0	9-0	20-0 7/8	8-2 7/8	5-7 3/8	0-3
126"	6-10 3/4	2-6	2-10	1-3	6-7	17-9	6-5	12-6	9-4	20-11 1/8	8-7 1/8	5-10 3/8	0-1 1/2
132"	7-1 3/4	2-6	3-0	1-4	6-10	18-6	6-8	13-0	9-9	21-9 3/8	8-11 3/8	6-1 3/8	0-6
138"	7-4 3/4	2-7	3-1	1-5	7-1	19-3	6-11	13-6	10-1	22-7 1/8	9-3 1/8	6-4	0-4 1/2
144"	7-7 3/4	2-8	3-2	1-6	7-4	20-0	7-2	14-0	10-6	23-5	9-7	6-6 1/2	0-3

Pipe Dia	DIMENSIONS OUTLET END: A	B	C	D	E	F	G	H	J	K	L	M	N
90"	5-6 5/8	2-1	2-0	1-0	5-1	13-0	4-11	9-6	6-3	16-9 5/8	7-8 5/8	4-1 7/8	0-3
96"	5-9 5/8	2-2	2-1	1-1	5-4	13-6	5-2	10-0	6-7	17-5	8-1	4-4 1/4	0-6
102"	6-0 5/8	2-2	2-2	1-3	5-7	14-3	5-5	10-6	6-11	18-4 1/8	8-6 1/8	4-7 1/4	0-4 1/2
108"	6-3 5/8	2-3	2-3	1-4	5-10	15-0	5-8	11-0	7-3	19-2 1/2	8-10 1/2	4-9 1/2	0-3
114"	6-6 5/8	2-3	2-5	1-5	6-1	15-9	5-11	11-6	7-7	20-1 5/8	9-3 5/8	5-0 1/2	0-1 1/2
120"	6-9 5/8	2-4	2-6	1-6	6-4	16-6	6-2	12-0	7-11	21-0	9-8	5-2 3/4	0-6
126"	7-2 3/4	2-6	2-6	1-7	6-7	17-3	6-5	12-6	8-3	21-11 1/8	10-1 1/8	5-5 3/4	0-4 1/2
132"	7-5 3/4	2-6	2-7	1-9	6-10	17-9	6-8	13-0	8-7	22-7 1/4	10-6 1/4	5-8 3/4	0-1 1/2
138"	7-8 3/4	2-7	2-8	1-10	7-1	18-6	6-11	13-6	8-11	23-5 5/8	10-10 5/8	5-11 1/8	0-6
144"	7-11 3/4	2-8	2-9	1-11	7-4	19-0	7-2	14-0	9-4	24-1	11-3	6-1 3/8	0-3

QUANTITIES

Pipe Dia.	Inlet Reinf. (lbs)	Inlet Conc. (CY)	Outlet Reinf. (lbs)	Outlet Conc. (CY)
90"	1255	23.17	1225	22.98
96"	1510	25.37	1440	24.89
102"	1725	27.71	1610	27.21
108"	1995	30.18	1850	29.60
114"	2310	32.68	2155	32.18
120"	2595	35.33	2395	34.79
126"	2935	41.39	2755	40.65
132"	3235	44.57	3040	43.28
138"	3625	47.72	3325	46.43
144"	4125	51.07	3790	49.27

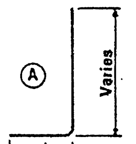

1-9	90"-108" Dia.
1-11	114"-132" Dia.
2-1	138"-144" Dia.

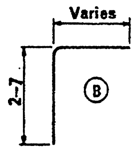

DESIGN APPROVED K.C. Brechle

APPROVED FOR DISTRIBUTION E.F. Sanchez

STATE OF ARIZONA
DEPARTMENT OF TRANSPORTATION
DIVISION OF HIGHWAYS
STANDARD DRAWINGS

INLET AND OUTLET HEADWALLS
RIGHT ANGLE PIPE CULVERT
4:1 SLOPE

REVISION 7-76

STANDARD NO. PH-5

DRAWING NO. B-12.04

DESIGN K W 9-72 | DRAWN LAM 9-72 | CHECKED RLC 9-72

STEEL LIST - INLET END

Mark	Bend	90" Dia			96" Dia			102" Dia			108" Dia			114" Dia			120" Dia			126" Dia			132" Dia			138" Dia			144" Dia		
		No	Size	Lgth	No	Size	Lgth	No	Size	Lgth	No	Size	Lgth	No	Size	Lgth	No	Size	Lgth	No	Size	Lgth	No	Size	Lgth	No	Size	Lgth	No	Size	Lgth
a1	A	8	#5	10-6	10	#6	11-0	8	#6	11-3	8	#6	11-9	10	#6	12-3	10	#7	12-9	10	#7	13-3	10	#7	13-6	12	#8	14-3	10	#8	14-6
a2	A	6	#6	11-0	6	#6	11-9	6	#6	11-9	6	#6	12-3	6	#7	13-0	6	#7	13-6	8	#7	13-9	8	#8	14-3	8	#8	14-9	8	#8	15-3
a3	A	6	#6	11-6	6	#6	12-3	6	#6	12-3	6	#7	12-6	6	#7	13-3	6	#7	13-9	6	#8	14-3	8	#8	14-9	8	#8	15-3	8	#8	15-9
a4	A	6	#6	11-9	6	#7	12-6	6	#6	12-6	6	#7	13-0	6	#7	13-9	6	#8	14-0	6	#8	14-6	6	#8	15-0	6	#8	15-9	8	#8	16-0
a5	A	6	#6	12-3	6	#7	13-0	6	#7	13-0	6	#7	13-3	6	#8	14-0	6	#8	14-6	6	#8	15-0	6	#8	15-6	6	#8	16-3	6	#8	16-6
a6	A							4	#7	13-3	6	#7	13-9	6	#8	14-3	6	#8	14-9	6	#8	15-3	6	#8	15-9	6	#8	16-6	6	#8	17-0
a7	A																			6	#4	9-0	18	#4	9-6	26	#4	10-3	36	#4	10-9
b1	str	4	#4	15-3	4	#4	16-0	4	#4	17-0	4	#4	18-0	4	#4	19-0	4	#4	19-6	4	#4	20-6	4	#4	21-3	4	#4	22-0	4	#4	22-9
b2	str	20	#4	15-3	24	#4	16-0	24	#4	17-0	24	#4	18-0	28	#4	18-9	28	#4	19-6	28	#4	20-3	24	#4	21-0	32	#4	21-9	32	#4	22-6
b3	str	4	#4	14-0	4	#4	5-0	4	#4	10-0	4	#4	14-6	4	#4	6-0	4	#4	10-3	4	#4	14-3	4	#4	19-0	4	#4	10-3	4	#4	15-3
b4	str																						4	#4	8-3				4	#4	2-6
b5	str																														
c	str	4	#4	10-6	4	#4	11-0	4	#4	11-6	4	#4	12-0	4	#4	12-6	4	#4	13-0	4	#4	13-6	4	#4	14-0	4	#4	14-6	4	#4	15-0
d	A	6	#6	12-3	6	#7	12-9	6	#7	13-3	6	#7	13-9	6	#8	14-3	6	#8	14-9	6	#8	15-3	6	#8	15-9	6	#8	16-3	6	#8	16-9
e1	str	12	#4	3-6	10	#4	3-9	10	#4	3-9	10	#4	4-0	10	#5	4-3	12	#5	4-6	12	#5	4-9	12	#6	5-0	12	#6	5-0	12	#6	5-3
e2	str	10	#4	3-9	8	#4	4-0	10	#4	4-0	10	#5	4-3	10	#5	4-6	10	#5	4-9	10	#6	5-0	12	#6	5-3	12	#6	5-3	12	#7	5-6
e3	str	10	#4	4-0	8	#5	4-3	8	#5	4-6	10	#5	4-6	10	#5	4-9	10	#6	5-0	10	#6	5-3	10	#6	5-6	12	#7	5-9	12	#7	6-0
e4	str				8	#5	4-6	8	#5	4-9	8	#5	4-9	10	#6	5-0	10	#6	5-3	10	#7	5-6	10	#7	5-9	12	#7	6-0	12	#8	6-3
e5	str																														
e6	str																														
e7	str	4	#4	4-0	4	#5	4-6	4	#5	4-9	4	#5	4-9	4	#6	5-0	4	#6	5-3	6	#7	5-6	6	#7	5-9	8	#7	6-0	8	#8	6-3
e8	str	10	#4	4-0	10	#5	4-6	11	#5	4-9	11	#5	4-9	12	#6	5-0	12	#6	5-3	13	#7	5-6	13	#7	5-9	14	#7	6-0	14	#8	6-3
f1	str	8	#4	8-9	8	#4	9-3	8	#4	9-6	8	#4	10-0	8	#4	10-6	8	#4	10-9	8	#4	11-3	8	#4	11-9	8	#4	12-0	8	#4	12-6
f2	str	8	#4	9-6	8	#4	10-3	8	#4	10-3	6	#4	10-9	6	#4	11-3	8	#4	11-6	8	#4	12-0	8	#4	12-6	8	#4	12-9	8	#4	13-3
f3	str	6	#4	10-3	6	#4	11-0	8	#4	11-0	6	#4	11-3	6	#4	11-9	6	#4	12-3	6	#4	12-9	8	#4	13-0	8	#4	13-6	8	#4	14-0
f4	str										6	#4	11-9	6	#4	12-3	6	#4	12-9	6	#4	13-3	6	#4	13-9	6	#4	14-3	8	#4	14-6
g	str	2	#4	15-3	2	#4	16-0	2	#4	17-0	2	#4	18-0	2	#4	18-9	2	#4	19-6	2	#4	20-3	2	#4	21-0	2	#4	21-9	2	#4	22-6
u	B	7	#4	4-6	7	#4	4-9	8	#4	4-9	8	#4	4-9	8	#4	4-9	8	#4	5-0	9	#4	5-0	9	#4	5-0	9	#4	5-0	10	#4	5-0
j	str	2	#4	9-3	2	#4	9-6	2	#4	10-0	2	#4	10-6	2	#4	11-0	2	#4	11-3	2	#4	11-9	2	#4	12-3	2	#4	12-9	2	#4	13-3
m	str	8	#4	18-0	8	#4	18-9	8	#4	19-9	8	#4	21-0	10	#4	21-9	10	#4	22-6	10	#4	23-6	10	#4	24-3	10	#4	25-3	10	#4	26-0
n	str	5	#4	12-9	5	#4	13-6	5	#4	14-0	5	#4	14-6	5	#4	15-3	5	#4	16-0	5	#4	16-6	5	#4	17-3	5	#4	18-0	5	#4	18-9
p	str	4	#5	10-0	4	#5	10-6	4	#5	11-0	4	#5	11-6	4	#5	12-0	4	#5	12-6	4	#5	13-0	4	#5	13-6	4	#5	14-0	4	#5	14-6
q	str	2	#6	12-0	2	#6	12-6	2	#6	13-0	2	#6	13-6	2	#6	14-0	2	#6	14-6	2	#6	15-0	2	#6	15-6	2	#6	16-0	2	#6	16-6

STEEL LIST - OUTLET END

Mark	Bend	90" Dia			96" Dia			102" Dia			108" Dia			114" Dia			120" Dia			126" Dia			132" Dia			138" Dia			144" Dia		
		No	Size	Lgth	No	Size	Lgth	No	Size	Lgth	No	Size	Lgth	No	Size	Lgth	No	Size	Lgth	No	Size	Lgth	No	Size	Lgth	No	Size	Lgth	No	Size	Lgth
a1	A	8	#5	10-3	8	#5	10-9	8	#5	11-0	8	#6	11-3	8	#6	11-9	8	#6	12-0	8	#7	12-6	8	#7	13-0	10	#7	13-9	10	#8	14-0
a2	A	8	#5	11-0	8	#6	11-6	8	#6	11-9	8	#6	12-0	8	#6	12-6	8	#7	12-9	8	#7	13-3	8	#8	13-9	8	#8	14-6	10	#8	15-0
a3	A	8	#6	11-9	8	#6	12-0	6	#6	12-3	6	#7	12-6	8	#7	13-0	8	#7	13-6	8	#8	13-9	8	#8	14-3	8	#8	15-0	8	#8	15-9
a4	A	6	#6	12-3	8	#6	12-6	6	#7	12-9	6	#7	13-0	6	#7	13-6	8	#8	14-0	8	#8	14-6	8	#8	15-0	8	#8	15-9	8	#8	16-6
a5	A							6	#7	13-0	6	#7	13-6	6	#8	14-0	6	#8	14-6	8	#8	15-0	8	#8	15-6	8	#8	16-3	8	#8	17-0
a6	A																														
a7	A																														
b1	str	4	#4	14-3	4	#4	15-3	4	#4	16-0	4	#4	16-9	4	#4	17-6	4	#4	18-3	8	#4	9-0	16	#4	9-6	20	#4	10-3	24	#4	10-9
b2	str	20	#4	14-3	20	#4	15-0	24	#4	15-9	24	#4	16-6	24	#4	17-3	24	#4	18-0	4	#4	19-0	4	#4	19-9	4	#4	20-6	4	#4	21-3
b3	str	4	#4	8-6	4	#4	13-6	4	#4	6-3	4	#4	10-9	4	#4	13-3	4	#4	16-9	28	#4	18-9	28	#4	19-6	28	#4	20-3	28	#4	21-0
b4	str				4	#4	4-3							4	#4	4-3	4	#4	7-6	4	#4	10-9	4	#4	14-0	4	#4	16-6	4	#4	20-6
b5	str																						4	#4	4-3	4	#4	7-3	4	#4	10-9
b6	str																														
c	str	4	#4	10-6	4	#4	11-0	4	#4	11-6	4	#4	12-0	4	#4	12-6	4	#4	13-0	4	#4	13-6	4	#4	14-0	4	#4	14-6	4	#4	15-0
d	A	6	#6	12-3	6	#6	12-9	6	#7	13-3	6	#7	13-9	6	#8	14-6	6	#8	15-0	6	#8	15-6	6	#8	16-0	6	#8	16-6	6	#8	17-0
e1	str	8	#4	3-6	8	#4	3-9	8	#4	3-9	8	#4	3-9	8	#4	4-0	8	#5	4-3	8	#5	4-3	10	#5	4-6	10	#5	4-6	10	#6	4-6
e2	str	8	#4	3-9	8	#4	4-0	8	#4	4-0	8	#4	4-0	8	#5	4-3	8	#5	4-6	8	#5	4-6	8	#6	4-9	8	#6	5-0	10	#6	5-0
e3	str	8	#4	4-0	8	#4	4-3	6	#4	4-3	8	#5	4-3	8	#5	4-6	8	#5	4-9	8	#6	4-9	8	#6	5-3	8	#6	5-3	8	#7	5-3
e4	str	6	#4	4-3	8	#5	4-6	6	#5	4-3	6	#5	4-6	6	#5	4-9	8	#6	5-0	8	#6	5-3	8	#6	5-6	8	#7	5-6	8	#7	5-9
e5	str							6	#5	4-6	6	#5	4-9	6	#6	5-0	6	#6	5-3	8	#7	5-6	8	#7	5-9	8	#7	6-0	8	#8	6-3
e6	str																														
e7	str	4	#4	4-3	4	#5	4-6	4	#5	4-6	4	#5	4-9	6	#6	5-0	6	#6	5-3	6	#7	5-6	6	#7	5-9	8	#7	6-0	8	#8	6-3
e8	str	10	#4	4-3	10	#5	4-6	11	#5	4-6	11	#5	4-9	12	#6	5-0	12	#6	5-3	13	#7	5-6	13	#7	5-9	14	#7	6-0	14	#8	6-3
f1	str	8	#4	8-6	8	#4	9-0	8	#4	9-3	6	#4	9-6	6	#4	10-0	8	#4	10-3	8	#4	10-9	8	#4	11-0	8	#4	11-6	8	#4	12-0
f2	str	6	#4	9-3	8	#4	9-9	8	#4	10-3	6	#4	10-6	6	#4	10-6	6	#4	11-3	6	#4	11-9	8	#4	12-0	8	#4	12-6	8	#4	12-9
f3	str	6	#4	10-0	6	#4	10-9	6	#4	11-0	6	#4	11-0	6	#4	11-3	6	#4	12-0	6	#4	12-6	6	#4	13-0	6	#4	13-3	8	#4	13-9
f4	str										6	#4	11-6	6	#4	12-0	6	#4	12-9	6	#4	13-0	6	#4	13-9	6	#4	14-0	6	#4	14-6
u	B	6	#4	4-6	6	#4	4-9	7	#4	4-9	7	#4	4-9	7	#4	4-9	8	#4	5-0	8	#4	5-0	8	#4	5-0	8	#4	5-0	9	#4	5-0
m	str	8	#4	17-9	8	#4	18-9	8	#4	19-9	8	#4	20-6	8	#4	21-6	10	#4	22-3	10	#4	23-3	10	#4	24-3	10	#4	25-0	10	#4	25-9
n	str	5	#4	15-0	5	#4	15-9	5	#4	16-6	5	#4	17-3	5	#4	18-0	5	#4	18-9	5	#4	19-6	5	#4	20-3	5	#4	21-0	5	#4	21-9
p	str	4	#5	10-0	4	#5	10-6	4	#5	11-0	4	#5	11-6	4	#5	12-0	4	#5	12-6	4	#5	13-0	4	#5	13-6	4	#5	14-0	4	#5	14-6
q	str	2	#6	12-0	2	#6	12-6	2	#6	13-0	2	#6	13-6	2	#6	14-0	2	#6	14-6	2	#6	15-0	2	#6	15-6	2	#6	16-0	2	#6	16-6
v	str	2	#4	8-6	2	#4	9-0	2	#4	9-3	2	#4	9-9	2	#4	10-3	2	#4	10-9	2	#4	11-3	2	#4	11-9	2	#4	12-0	2	#4	12-6
w	str	2	#4	14-9	2	#4	15-6	2	#4	16-3	2	#4	16-9	2	#4	17-6	2	#4	18-3	2	#4	19-0	2	#4	19-9	2	#4	20-6	2	#4	21-3

DIMENSIONS INLET END

Pipe Dia	A	B	C	D	E	F	G	H	J	K	L	M	N
90"	5-2	2-0	2-6	0-7	5-1	15-3	4-11	9-6	7-8	17-11 1/4	6-7 1/4	4-6	0-4 1/2
96"	5-5	2-2	2-7	0-7	5-4	16-0	5-2	10-0	8-1	18-8 3/4	6-10 3/4	4-8 1/4	0-3
102"	5-8	2-2	2-8	0-9	5-7	17-0	5-5	10-6	8-6	19-10	7-3	4-11 1/4	0-3
108"	5-11	2-2	2-11	0-9	5-10	18-0	5-8	11-0	8-11	20-11 1/8	7-7 1/4	5-2 1/4	0-3
114"	6-2	2-3	2-11	0-11	6-1	18-9	5-11	11-6	9-4	21-9	7-11	5-4 3/4	0-1 1/2
120"	6-5	2-4	3-1	0-11	6-4	19-6	6-2	12-0	9-9	22-6 7/8	8-2 7/8	5-7 3/8	0-6
126"	6-10 3/4	2-6	3-1	1-0	6-7	20-3	6-5	12-6	10-2	23-5	8-7 1/8	5-10 3/8	0-4 1/2
132"	7-1 3/4	2-6	3-4	1-0	6-10	21-0	6-8	13-0	10-7	24-3 3/8	8-11 3/8	6-1 3/8	0-3
138"	7-4 3/4	2-7	3-5	1-1	7-1	21-9	6-11	13-6	11-0	25-1 1/4	9-3 1/8	6-4	0-1 1/2
144"	7-7 3/4	2-8	3-7	1-1	7-4	22-6	7-2	14-0	11-5	25-11	9-7	6-6 1/2	0-6

DIMENSIONS OUTLET END

Pipe Dia	A	B	C	D	E	F	G	H	J	K	L	M	N
90"	5-6 5/8	2-1	2-6	0-6	5-1	14-3	4-11	9-6	7-3	18-0 5/8	7-8 5/8	4-1 7/8	0-4 1/2
96"	5-9 5/8	2-2	2-7	0-7	5-4	15-0	5-2	10-0	7-8	18-11	8-1	4-4 1/4	0-3
102"	6-0 5/8	2-2	2-8	0-9	5-7	15-9	5-5	10-6	8-0	19-10 1/8	8-6 1/8	4-7 1/4	0-1 1/2
108"	6-3 5/8	2-3	2-9	0-10	5-10	16-6	5-8	11-0	8-5	20-8 1/2	8-10 1/2	4-9 1/2	0-6
114"	6-6 5/8	2-3	2-10	1-0	6-1	17-3	5-11	11-6	8-9	21-7 5/8	9-3 5/8	5-0 1/2	0-4 1/2
120"	6-9 5/8	2-4	3-0	1-0	6-4	18-0	6-2	12-0	9-2	22-6	9-8	5-2 3/4	0-3
126"	7-2 3/4	2-6	2-11	1-2	6-7	18-9	6-5	12-6	9-7	23-5 1/8	10-1 1/8	5-5 3/4	0-1 1/2
132"	7-5 3/4	2-6	3-0	1-4	6-10	19-6	6-8	13-0	10-0	24-4 1/4	10-6 1/4	5-8 3/4	0-6
138"	7-8 3/4	2-7	3-2	1-4	7-1	20-3	6-11	13-6	10-4	25-2 5/8	10-10 5/8	5-11 1/8	0-4 1/2
144"	7-11 3/4	2/8	3-4	1-4	7-4	21-0	7-2	14-0	10-9	26-1	11-3	6-1 3/8	0-3

QUANTITIES

Pipe Dia.	Inlet Reinf. (lbs)	Inlet Conc. (CY)	Outlet Reinf. (lbs)	Outlet Conc. (CY)
90"	1455	25.92	1365	25.26
96"	1810	28.34	1590	27.68
102"	1935	31.13	1840	30.05
108"	2215	34.21	2050	32.63
114"	2705	36.84	2395	35.27
120"	2990	39.76	2785	38.12
126"	3395	46.47	3275	44.48
132"	3835	49.94	3700	47.74
138"	4335	53.37	3850	51.13
144"	4760	57.01	4460	54.70

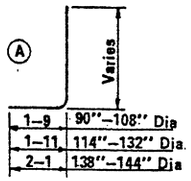

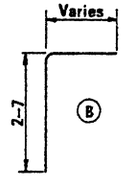

DESIGN APPROVED R.C. Brechler	STATE OF ARIZONA DEPARTMENT OF TRANSPORTATION DIVISION OF HIGHWAYS STANDARD DRAWINGS	REVISION 7-76
APPROVED FOR DISTRIBUTION	INLET AND OUTLET HEADWALLS RIGHT ANGLE PIPE CULVERT 6:1 SLOPE	STANDARD NO. PH-6 DRAWING NO. B-12.05

DESIGN	K W	9-72	DRAWN	LAM	9-72	CHECKED	RLC	9-72

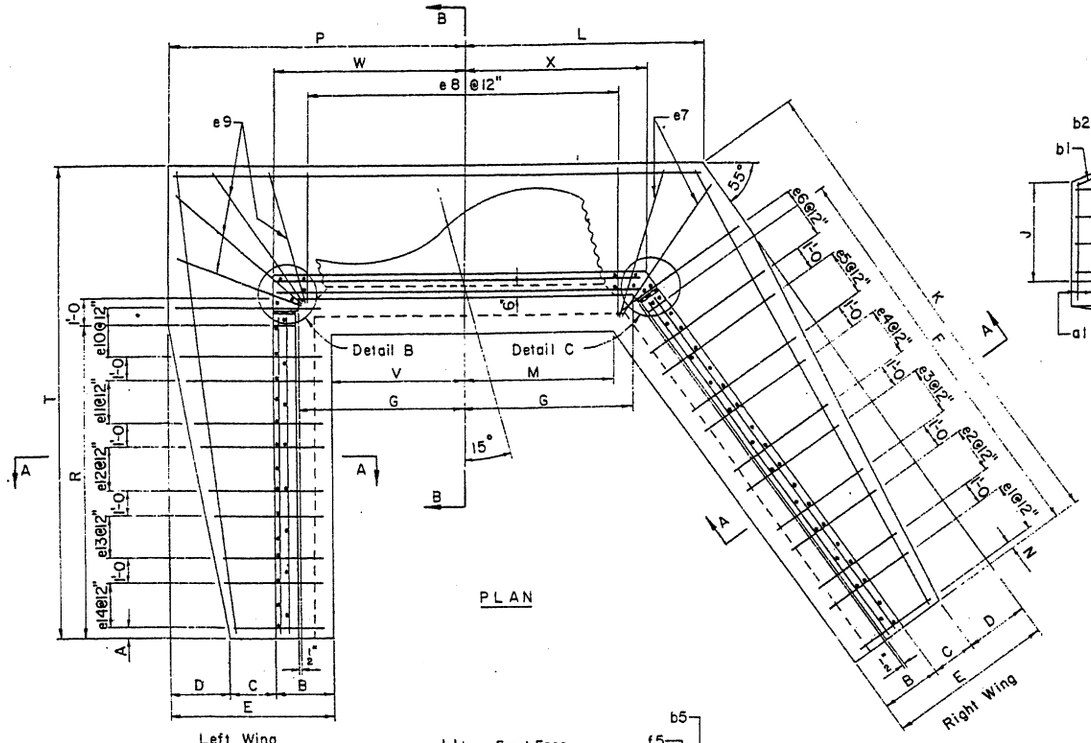

PLAN

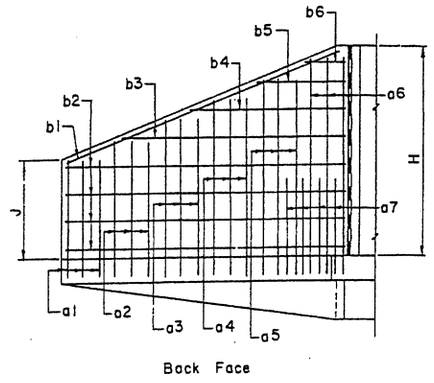

RIGHT WING ELEVATION

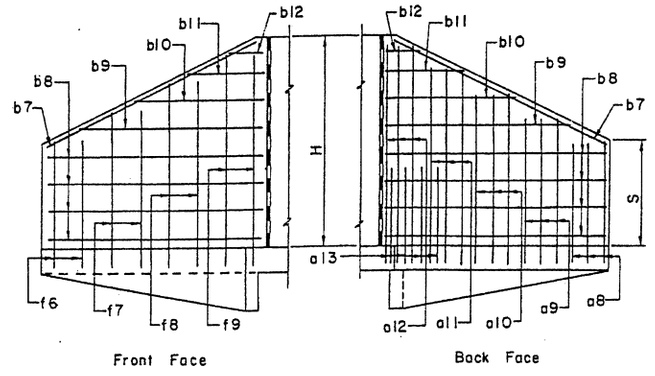

LEFT WING ELEVATION

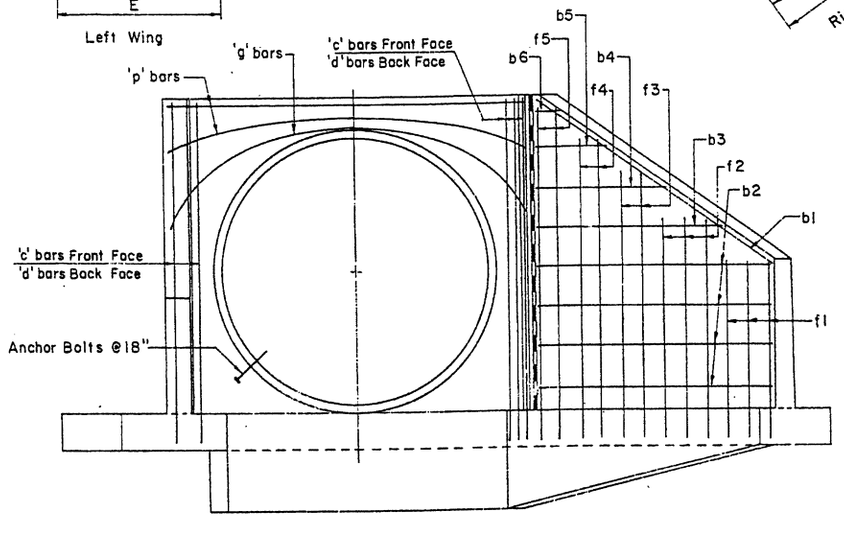

ELEVATION

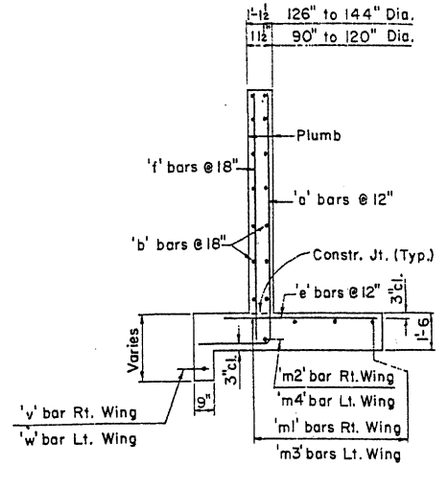

SECTION A-A

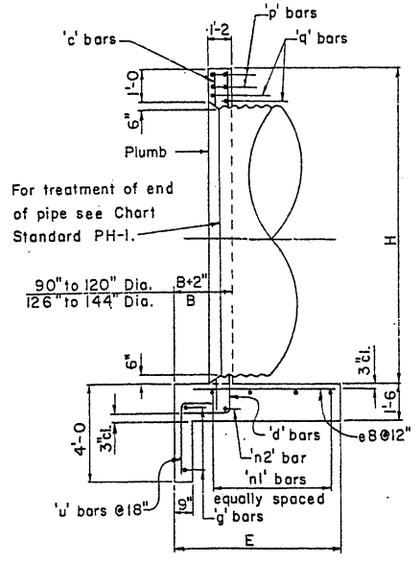

SECTION B-B

Notes: For General Notes and Misc. Details see Std. PH-1.
For steel list and bend diagrams see Std. PH-8, PH-9, or PH-10.

DESIGN	K.W.	9-72	NO.	DESCRIPTION OF REVISIONS	MADE BY	DATE
DRAWN	G.H.	9-72	1	Revised ℄ of Pipe.	WSK:see	2-11-75
CHECKED	R.L.C.	9-72	2	Wall Thicknesses	G.H.	7-14-76
			3			

DESIGN APPROVED

APPROVED FOR DISTRIBUTION

STATE OF ARIZONA
DEPARTMENT OF TRANSPORTATION
DIVISION OF HIGHWAYS
STANDARD DRAWINGS

INLET & OUTLET HEADWALLS
15° SKEW PIPE CULVERT

REVISION 7-14-76

STANDARD NO. PH-7

DRAWING NO. B-13.01

STEEL LIST

Mark	Bend	90" Dia			96" Dia			102" Dia			108" Dia			114" Dia			120" Dia			126" Dia			132" Dia			138" Dia			144" Dia		
		No	Size	Lgth	No	Size	Lgth	No	Size	Lgth	No	Size	Lgth	No	Size	Lgth	No	Size	Lgth	No	Size	Lgth	No	Size	Lgth	No	Size	Lgth	No	Size	Lgth
a1	A	3	#4	7-6	3	#4	7-9	3	#4	8-0	3	#4	8-3	3	#4	8-6	3	#4	9-0	3	#4	9-3	3	#4	9-6	3	#5	9-9	4	#5	10-0
a2	A	3	#4	8-9	3	#4	9-0	3	#4	9-3	3	#5	9-6	3	#5	9-9	3	#5	10-3	3	#5	10-6	3	#5	10-9	3	#6	11-0	3	#6	11-9
a3	A	3	#5	10-0	3	#5	10-3	3	#5	10-6	3	#6	10-9	3	#6	11-3	3	#6	11-6	3	#6	11-9	3	#6	12-0	3	#7	12-3	3	#7	13-0
a4	A	2	#5	11-3	2	#6	11-3	3	#6	11-9	3	#7	12-0	2	#7	12-3	3	#7	12-9	3	#7	12-9	3	#7	13-0	3	#8	13-6	3	#8	14-3
a5	A	2	#6	12-0	2	#7	12-6	2	#7	13-0	3	#8	13-3	2	#7	13-3	2	#8	13-9	3	#8	14-0	3	#8	14-3	3	#8	14-9	3	#8	15-6
a6	A													2	#8	14-3	2	#8	14-9	2	#8	15-3	2	#8	15-6	3	#8	16-0	3	#8	16-9
a7	A																			2	#4	6-0	3	#4	7-0	5	#4	7-0	3	#4	7-0
a8	A	3	#4	7-9	3	#4	8-0	3	#4	8-3	3	#4	8-6	3	#4	9-0	3	#4	9-3	3	#4	9-6	3	#5	9-9	3	#5	10-0	5	#5	10-3
a9	A	3	#5	9-3	3	#5	9-6	3	#5	9-9	3	#5	10-0	3	#5	10-6	3	#6	10-9	3	#6	11-0	3	#6	11-3	3	#6	11-6	3	#6	11-9
a10	A	2	#6	10-9	3	#6	11-0	3	#6	11-3	3	#6	11-6	2	#6	12-0	3	#7	12-3	3	#7	12-6	3	#7	12-9	3	#7	13-0	3	#8	13-3
a11	A	2	#6	11-9	2	#7	12-3	2	#7	12-9	3	#7	13-0	2	#7	13-3	2	#7	13-6	2	#7	13-9	3	#8	14-3	3	#8	14-9	3	#8	15-0
a12	A													2	#7	14-3	2	#7	14-9	2	#7	15-3	2	#8	15-6	2	#8	16-0	3	#8	16-6
a13	A													3	#4	6-0	4	#4	6-0	4	#4	6-0	4	#4	7-0	4	#4	7-0	8	#4	7-0
b1	str	2	#4	12-6	2	#4	13-0	2	#4	14-0	2	#4	14-6	2	#4	15-0	2	#4	16-0	2	#4	16-9	2	#4	17-3	2	#4	18-0	2	#4	18-9
b2	str	6	#4	12-0	8	#4	12-6	8	#4	13-6	8	#4	14-0	8	#4	14-9	8	#4	15-3	8	#4	16-0	8	#4	16-9	10	#4	17-6	10	#4	18-0
b3	str	2	#4	11-6	2	#4	9-3	2	#4	10-6	2	#4	11-6	2	#4	12-9	2	#4	14-0	2	#4	15-6	2	#4	16-6	2	#4	14-0	2	#4	15-3
b4	str	2	#4	8-0	2	#4	5-6	2	#4	6-9	2	#4	7-9	2	#4	9-0	2	#4	10-3	2	#4	11-6	2	#4	12-6	2	#4	10-6	2	#4	11-6
b5	str	2	#4	4-3	2	#4	2-0	2	#4	3-0	2	#4	4-3	2	#4	5-3	2	#4	6-6	2	#4	7-9	2	#4	9-0	2	#4	6-9	2	#4	7-9
b6	str																2	#4	3-0	2	#4	4-3	2	#4	5-3	2	#4	3-0	2	#4	4-3
b7	str	2	#4	10-3	2	#4	10-9	2	#4	11-3	2	#4	11-9	2	#4	12-3	2	#4	12-9	2	#4	13-3	2	#4	14-0	2	#4	14-6	2	#4	15-0
b8	str	8	#4	9-6	8	#4	10-0	8	#4	10-6	8	#4	11-0	8	#4	11-6	8	#4	12-0	10	#4	12-6	10	#4	13-0	10	#4	13-6	10	#4	14-0
b9	str	2	#4	6-6	2	#4	7-6	2	#4	8-6	2	#4	9-6	2	#4	10-6	2	#4	11-6	2	#4	9-6	2	#4	10-6	2	#4	11-3	2	#4	12-3
b10	str	2	#4	3-6	2	#4	4-6	2	#4	5-6	2	#4	6-6	2	#4	7-6	2	#4	8-6	2	#4	6-6	2	#4	7-6	2	#4	8-3	2	#4	9-3
b11	str				2	#4	1-6	2	#4	2-6	2	#4	3-6	2	#4	4-6	2	#4	5-6	2	#4	3-3	2	#4	4-6	2	#4	5-3	2	#4	6-6
b12	str													2	#4	1-6	2	#4	2-3				2	#4	1-3	2	#4	2-3	2	#4	3-6
c	str	5	#4	10-6	5	#4	11-0	5	#4	11-6	5	#4	12-0	5	#4	12-6	5	#4	13-0	5	#4	13-6	5	#4	14-0	5	#4	14-6	5	#4	15-0
d	A	6	#6	12-3	6	#6	12-9	6	#7	13-3	6	#7	13-9	6	#7	14-6	6	#7	15-0	6	#7	15-6	6	#7	16-0	6	#7	16-6	6	#7	17-0
e1	str	3	#4	2-3	3	#4	2-3	3	#4	2-6	3	#4	2-9	3	#4	2-9	3	#4	2-9	3	#4	2-9	3	#4	2-9	3	#4	3-0	4	#4	3-0
e2	str	3	#4	2-9	3	#4	2-9	3	#4	3-0	3	#4	3-0	3	#4	3-3	3	#4	3-3	3	#4	3-3	3	#5	3-6	3	#5	3-6	3	#5	3-9
e3	str	3	#4	3-3	3	#4	3-3	3	#5	3-6	3	#5	3-6	3	#5	3-9	3	#5	3-9	3	#5	4-0	3	#5	4-0	3	#6	4-0	3	#6	4-3
e4	str	2	#5	3-6	3	#5	3-9	3	#6	3-9	3	#6	4-0	3	#6	4-3	3	#6	4-3	3	#6	4-6	3	#6	4-6	3	#7	4-6	3	#7	4-9
e5	str	2	#5	3-9	2	#6	4-0	2	#6	4-3	3	#7	4-6	2	#7	4-6	2	#7	4-9	3	#7	5-0	3	#7	5-0	3	#7	5-0	3	#8	5-3
e6	str													2	#7	5-0	2	#7	5-3	2	#8	5-6	3	#8	5-6	3	#8	5-9	3	#8	5-9
e7	str	2	#5	4-3	2	#6	4-6	2	#6	4-9	2	#7	5-3	2	#7	5-6	2	#7	5-9	2	#8	6-0	2	#8	6-3	2	#8	6-6	2	#8	6-6
e8	str	10	#5	4-3	11	#6	4-6	11	#6	4-9	12	#7	5-3	12	#7	5-6	13	#7	5-9	13	#8	6-0	14	#8	6-3	14	#8	6-6	15	#8	6-6
e9	str	4	#5	4-3	4	#6	4-6	4	#6	4-9	4	#7	5-3	4	#7	5-6	4	#7	5-9	4	#8	6-0	4	#8	6-3	4	#8	6-6	4	#8	6-6
e10	str	2	#4	4-3	2	#5	4-6	3	#5	4-9	3	#5	4-6	2	#6	5-3	2	#6	5-6	2	#7	5-9	2	#7	6-0	3	#7	6-3	3	#8	6-6
e11	str	3	#4	3-6	3	#4	3-9	3	#4	4-0	3	#5	4-0	2	#5	4-9	2	#6	5-0	3	#6	5-0	3	#6	5-3	3	#7	5-6	3	#7	5-9
e12	str	3	#4	3-0	3	#4	3-0	3	#4	3-3	3	#4	3-3	3	#5	4-0	3	#5	4-3	3	#5	4-3	3	#5	4-6	3	#5	4-6	3	#6	4-9
e13	str	3	#4	2-3	3	#4	2-3	3	#4	2-6	3	#4	2-9	3	#4	3-3	3	#4	3-6	3	#4	3-6	3	#4	3-9	3	#4	3-9	3	#5	4-0
e14	str													3	#4	2-6	3	#4	2-9	3	#4	2-9	3	#4	3-0	3	#4	3-0	3	#4	3-6
f1	str	3	#4	5-9	3	#4	6-0	3	#4	6-3	3	#4	6-6	3	#4	6-9	3	#4	7-0	3	#4	7-0	3	#4	7-3	3	#4	7-6	4	#4	7-9
f2	str	2	#4	7-9	2	#4	8-0	3	#4	8-0	3	#4	8-6	3	#4	8-6	3	#4	9-0	3	#4	9-0	3	#4	9-3	3	#4	9-9	3	#4	10-3
f3	str	2	#4	9-0	2	#4	9-3	2	#4	10-0	2	#4	10-3	3	#4	10-3	3	#4	10-9	3	#4	10-9	3	#4	11-3	3	#4	11-6	3	#4	12-3
f4	str	2	#4	10-0	2	#4	10-6	2	#4	11-3	2	#4	11-6	2	#4	12-3	2	#4	12-6	3	#4	12-6	3	#4	13-0	3	#4	13-3	3	#4	14-0
f5	str																														
f6	str	3	#4	6-0	3	#4	6-3	3	#4	6-6	3	#4	6-9	3	#4	7-0	3	#4	7-3	3	#4	7-6	3	#4	7-9	3	#4	8-0	3	#4	8-3
f7	str	2	#4	8-3	3	#4	8-6	3	#4	8-9	3	#4	9-3	2	#4	9-3	2	#4	9-6	2	#4	10-0	3	#4	10-0	3	#4	10-3	3	#4	10-9
f8	str	2	#4	10-0	2	#4	10-9	2	#4	11-0	2	#4	11-6	2	#4	10-9	2	#4	11-0	2	#4	11-6	2	#4	12-3	2	#4	12-6	2	#4	13-0
f9	str													2	#4	12-3	2	#4	12-6	2	#4	13-0	2	#4	13-9	2	#4	14-0	2	#4	14-6
m1	str	3	#4	14-9	3	#4	15-6	3	#4	16-6	3	#4	17-0	4	#4	18-0	4	#4	18-9	4	#4	19-6	4	#4	20-3	4	#4	21-0	4	#4	21-9
m2	str	1	#4	14-9	1	#4	15-6	1	#4	16-6	1	#4	17-0	1	#4	18-0	1	#4	18-9	1	#4	19-6	1	#4	20-3	1	#4	21-0	1	#4	21-9
m3	str	3	#4	14-0	3	#4	14-9	3	#4	15-6	3	#4	16-3	4	#4	17-0	4	#4	17-6	4	#4	18-3	4	#4	19-0	4	#4	19-9	4	#4	20-6
m4	str	1	#4	14-0	1	#4	14-9	1	#4	15-6	1	#4	16-3	1	#4	17-0	1	#4	17-6	1	#4	18-3	1	#4	19-0	1	#4	19-9	1	#4	20-6
n1	str	3	#4	16-0	3	#4	16-9	3	#4	17-6	3	#4	18-3	4	#4	19-0	4	#4	19-9	4	#4	20-6	4	#4	21-3	4	#4	22-3	4	#4	23-3
n2	str	1	#4	16-0	1	#4	16-9	1	#4	17-6	1	#4	18-3	1	#4	19-0	1	#4	19-9	1	#4	20-6	1	#4	21-3	1	#4	22-3	1	#4	23-3
p	str	4	#5	11-0	4	#5	11-6	4	#5	12-0	4	#5	12-6	4	#5	13-0	4	#5	13-6	4	#5	14-0	4	#5	14-6	4	#5	15-0	4	#5	15-6
q	str	2	#6	13-0	2	#6	13-6	2	#6	14-0	2	#6	14-6	2	#6	15-0	2	#6	15-6	2	#6	16-0	2	#6	16-6	2	#6	17-0	2	#6	17-6
g	str	2	#4	9-0	2	#4	9-3	2	#4	9-9	2	#4	10-3	2	#4	10-[illegible]	2	#4	11-0	2	#4	11-6	2	#4	12-0	2	#4	12-6	2	#4	13-0
u	B	7	#4	4-6	7	#4	4-6	7	#4	4-6	8	#4	4-9	8	#4	4-[illegible]	8	#4	4-9	8	#4	4-9	9	#4	5-0	9	#4	5-0	9	#4	5-0
v	str	1	#4	12-9	1	#4	13-6	1	#4	14-3	1	#4	14-9	1	#4	15-[illegible]	1	#4	16-0	1	#4	16-9	1	#4	17-3	1	#4	18-0	1	#4	18-6
w	str	1	#4	9-6	1	#4	9-9	1	#4	10-3	1	#4	10-9	1	#4	11-3	1	#4	11-9	1	#4	12-3	1	#4	12-9	1	#4	13-3	1	#4	13-6

Pipe Dia	DIMENSIONS																		
	A	B	C	D	E	F	G	H	J	K	L	M	N	P	R	S	T	V	W	X
90"	0-6	2-1	1-2	1-10	5-1	12-0	5-1	9-6	4-7	15-1	7-2	4-6 1/4	0-3	9-1	9-6	4-9	14-6	4-0	6-1	5-5 7/8
96"	0-3	2-2	1-3	1-11	5-4	12-8	5-4	10-0	4-10	15-10	7-6	4-8 3/4	0-7	9-6	10-0	5-0	15-2	4-2	6-4	5-8 7/8
102"	0-6	2-2	1-4	2-1	5-7	13-4	5-7	10-6	5-1	16-7 5/8	7-10 5/8	4-11 3/4	0-5	10-0	10-6	5-3	15-11	4-5	6-7	5-11 7/8
108"	0-3	2-3	1-5	2-2	5-10	14-0	5-10	11-0	5-3	17-4 5/8	8-2 5/8	5-2	0-3	10-5	11-0	5-6	16-7	4-7	6-10	6-2 7/8
114"	0-6	2-3	1-7	2-3	6-1	14-8	6-1	11-6	5-6	18-2 1/4	8-7 1/4	5-5 1/4	0-7	10-11	11-6	5-9	17-4	4-10	7-1	6-5 7/8
120"	0-3	2-4	1-8	2-4	6-4	15-4	6-4	12-0	5-9	18-11 1/4	8-11 1/4	5-7 5/8	0-5	11-4	12-0	6-0	18-0	5-0	7-4	6-8 7/8
126"	0-6	2-6	1-7	2-6	6-7	16-0	6-7	12-6	6-0	19-8 3/4	9-3 7/8	5-10 5/8	0-3	11-10	12-6	6-3	18-9	5-3	7-9	7-2 1/4
132"	0-3	2-7	1-8	2-7	6-10	16-8	6-10	13-0	6-2	20-5 7/8	9-7 7/8	6-1 1/8	0-7	12-3	13-0	6-6	19-5	5-5	8-0	7-5 1/4
138"	0-6	2-7	1-10	2-8	7-1	17-4	7-1	13-6	6-5	21-3 3/8	10-0 3/8	6-4 1/8	0-5	12-9	13-6	6-9	20-2	5-8	8-3	7-8 1/4
144"	0-3	2-8	1-11	2-9	7-4	18-0	7-5	14-0	6-8	22-0 1/2	10-5 1/2	6-7 5/8	0-3	13-3	14-0	7-0	20-10	5-11	8-7	8-0 1/4

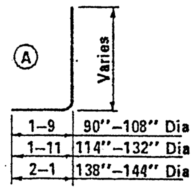

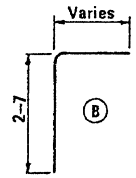

QUANTITIES

Pipe Dia.	Reinf. (lbs)	Conc. (CY)
90"	1025	20.02
96"	1180	21.86
102"	1330	23.83
108"	1595	25.79
114"	1760	27.99
120"	1955	30.15
126"	2180	34.27
132"	2395	36.72
138"	2645	39.37
144"	2920	42.20

NOTE:

Quantities and steel list shown are for one headwall.

DESIGN KW 9-72 | DRAWN LAM 9-72 | CHECKED RLC 9-72

DESIGN APPROVED R. C. Brechler

APPROVED FOR DISTRIBUTION

STATE OF ARIZONA
DEPARTMENT OF TRANSPORTATION
DIVISION OF HIGHWAYS
STANDARD DRAWINGS

INLET AND OUTLET HEADWALLS
15° SKEW PIPE CULVERT
2:1 SLOPE

REVISION 7-76

STANDARD NO. PH-8

DRAWING NO. B-13.02

STEEL LIST

Mark	Bend	90" Dia			96" Dia			102" Dia			108" Dia			114" Dia			120" Dia			126" Dia			132" Dia			138" Dia			144" Dia		
		No	Size	Lgth	No	Size	Lgth	No	Size	Lgth	No	Size	Lgth	No	Size	Lgth	No	Size	Lgth	No	Size	Lgth	No	Size	Lgth	No	Size	Lgth	No	Size	Lgth
a1	A	4	#5	9-9	3	#5	10-3	4	#5	10-6	4	#5	10-9	4	#6	11-3	4	#6	11-9	4	#6	12-0	4	#6	12-6	4	#7	12-9	5	#7	13-3
a2	A	4	#5	10-9	3	#5	10-9	3	#6	11-3	4	#6	11-6	4	#6	12-0	4	#7	12-6	4	#7	12-9	4	#7	13-3	4	#8	13-9	4	#8	14-3
a3	A	3	#6	11-6	3	#6	11-3	3	#6	12-0	3	#6	12-3	3	#7	12-9	4	#7	13-3	4	#8	13-6	4	#8	14-0	4	#8	14-6	4	#8	15-0
a4	A	3	#6	12-3	3	#6	12-0	3	#7	12-6	3	#7	13-0	3	#7	13-6	3	#8	14-0	4	#8	14-6	4	#8	14-9	4	#8	15-3	4	#8	15-9
a5	A				3	#7	12-6	3	#7	13-0	2	#7	13-6	3	#8	14-0	3	#8	14-6	3	#8	15-0	3	#8	15-6	4	#8	16-0	4	#8	16-6
a6	A																														
a7	A																			3	#4	7-3	6	#4	7-9	8	#4	8-3	11	#4	8-6
a8	A	3	#4	9-0	3	#4	9-6	4	#5	9-9	4	#5	10-3	4	#6	10-9	4	#6	11-0	4	#6	11-3	4	#6	11-9	4	#6	12-0	4	#7	12-6
a9	A	3	#4	9-9	3	#5	10-3	3	#5	10-9	4	#6	11-3	4	#6	11-9	4	#6	12-0	4	#7	12-3	4	#7	12-6	4	#7	13-0	4	#7	13-6
a10	A	3	#5	10-6	3	#6	11-0	3	#6	11-6	3	#7	12-0	3	#7	12-6	4	#7	13-0	4	#8	13-3	4	#8	13-6	4	#8	14-0	4	#8	14-6
a11	A	3	#6	11-3	3	#6	11-9	3	#7	12-3	3	#7	12-9	3	#7	13-6	3	#8	14-0	3	#8	14-3	4	#8	14-6	4	#8	15-0	4	#8	15-6
a12	A	2	#6	12-0	3	#7	12-3	3	#7	12-9	2	#7	13-3	3	#8	14-0	2	#8	14-6	3	#8	15-0	3	#8	15-6	3	#8	16-0	4	#8	16-6
a13	A																			2	#4	7-0	6	#4	7-0	6	#4	7-3	7	#4	7-9
b1	str	2	#4	13-6	2	#4	14-3	2	#4	15-0	2	#4	15-9	2	#4	16-6	2	#4	17-3	2	#4	18-0	2	#4	18-9	2	#4	19-6	2	#4	20-3
b2	str	10	#4	13-3	10	#4	14-0	10	#4	14-9	12	#4	15-6	12	#4	16-3	12	#4	17-0	12	#4	17-9	14	#4	18-6	14	#4	19-3	14	#4	20-0
b3	str	2	#4	8-0	2	#4	10-9	2	#4	13-0	2	#4	8-0	2	#4	10-6	2	#4	12-9	2	#4	15-3	2	#4	10-9	2	#4	12-9	2	#4	15-3
b4	str				2	#4	3-0	2	#4	5-9				2	#4	3-3	2	#4	5-6	2	#4	8-0	2	#4	3-3	2	#4	5-6	2	#4	7-9
b5	str																														
b6	str																														
b7	str	2	#4	13-6	2	#4	14-0	2	#4	14-9	2	#4	15-6	2	#4	16-0	2	#4	16-6	2	#4	17-3	2	#4	18-0	2	#4	18-6	2	#4	19-0
b8	str	8	#4	13-6	10	#4	14-0	10	#4	14-9	10	#4	15-6	10	#4	16-0	12	#4	16-6	12	#4	17-3	12	#4	18-0	12	#4	18-6	12	#4	19-0
b9	str	2	#4	12-9	2	#4	8-9	2	#4	10-9	2	#4	12-9	2	#4	14-6	2	#4	10-9	2	#4	12-6	2	#4	14-6	2	#4	16-6	2	#4	18-6
b10	str	2	#4	6-9	2	#4	2-9	2	#4	4-9	2	#4	6-9	2	#4	8-6	2	#4	4-9	2	#4	6-6	2	#4	8-9	2	#4	10-9	2	#4	12-6
b11	str													2	#4	2-9							2	#4	2-6	2	#4	4-6	2	#4	6-6
b12	str																														
c	str	5	#4	10-6	5	#4	11-0	5	#4	11-6	5	#4	12-0	5	#4	12-6	5	#4	13-0	5	#4	13-6	5	#4	14-0	5	#4	14-6	5	#4	15-0
d	A	6	#6	12-3	6	#6	12-9	6	#7	13-3	6	#7	13-9	6	#7	14-6	6	#7	15-0	6	#7	15-6	6	#7	16-0	6	#7	16-6	6	#7	17-0
e1	str	4	#4	3-0	3	#4	3-0	4	#4	3-3	4	#4	3-6	4	#4	3-9	4	#4	4-0	4	#4	4-0	4	#4	4-3	4	#4	4-6	5	#5	4-6
e2	str	4	#4	3-6	3	#4	3-6	3	#4	3-6	4	#4	3-9	4	#4	4-0	4	#4	4-3	4	#5	4-3	4	#5	4-6	4	#5	4-9	4	#6	5-0
e3	str	3	#4	3-9	3	#4	3-9	3	#4	4-0	3	#4	4-0	3	#5	4-3	4	#5	4-6	4	#5	4-9	4	#6	4-9	4	#6	5-0	4	#6	5-3
e4	str	3	#4	4-0	3	#4	4-0	3	#4	4-3	3	#5	4-6	3	#5	4-6	3	#6	4-9	4	#6	5-0	4	#6	5-3	4	#7	5-6	4	#7	5-9
e5	str				3	#5	4-3	3	#5	4-6	3	#5	4-9	3	#6	4-9	3	#6	5-0	3	#7	5-3	4	#7	5-6	4	#7	5-9	4	#8	6-0
e6	str																														
e7	str	2	#4	4-3	2	#5	4-6	2	#5	4-9	2	#5	5-0	2	#6	5-0	2	#6	5-3	2	#7	5-6	2	#7	5-9	2	#7	6-0	2	#8	6-3
e8	str	10	#4	4-3	11	#5	4-6	11	#5	4-9	12	#5	5-0	12	#6	5-0	13	#6	5-3	13	#7	5-6	14	#7	5-9	14	#7	6-0	15	#8	6-3
e9	str	4	#4	4-3	4	#5	4-6	4	#5	4-9	4	#5	5-0	4	#6	5-0	4	#6	5-3	4	#7	5-6	4	#7	5-9	4	#7	6-0	4	#8	6-3
e10	str	3	#4	4-0	3	#5	4-3	4	#5	4-6	3	#5	4-9	3	#6	4-9	3	#6	5-0	3	#7	5-3	3	#7	5-6	4	#7	5-9	4	#8	6-0
e11	str	3	#4	3-9	3	#4	4-0	4	#4	4-0	3	#5	4-6	3	#5	4-6	3	#6	4-9	3	#6	5-0	4	#6	5-3	4	#7	5-6	4	#7	5-9
e12	str	3	#4	3-6	3	#4	3-9	4	#4	3-9	3	#4	4-0	3	#4	4-3	4	#5	4-6	4	#5	4-9	4	#6	4-9	4	#6	5-0	4	#6	5-3
e13	str	3	#4	3-3	3	#4	3-6	4	#4	3-3	4	#4	3-9	4	#4	4-0	4	#4	4-3	4	#4	4-3	4	#5	4-6	4	#5	4-9	4	#5	5-0
e14	str	3	#4	3-0	3	#4	3-0				4	#4	3-6	4	#4	3-9	4	#4	4-0	4	#4	4-0	4	#4	4-3	4	#4	4-6	4	#4	4-6
f1	str	4	#4	7-9	4	#4	8-6	4	#4	8-9	4	#4	9-0	3	#4	9-3	3	#4	9-9	4	#4	10-0	4	#4	10-6	4	#4	10-9	4	#4	11-0
f2	str	3	#4	9-3	3	#4	9-9	4	#4	10-0	4	#4	10-3	3	#4	10-3	3	#4	10-9	3	#4	11-3	3	#4	11-9	4	#4	12-0	4	#4	12-3
f3	str	3	#4	10-0	3	#4	10-6	3	#4	11-0	3	#4	11-6	3	#4	11-3	3	#4	11-6	3	#4	12-3	3	#4	12-9	3	#4	13-3	3	#4	13-6
f4	str													3	#4	12-0	3	#4	12-6	3	#4	13-0	3	#4	13-6	3	#4	14-0	3	#4	14-6
f5	str																														
f6	str	4	#4	7-3	4	#4	7-9	4	#4	8-0	4	#4	8-6	3	#4	8-9	3	#4	9-0	3	#4	9-6	4	#4	9-9	4	#4	10-0	4	#4	10-6
f7	str	3	#4	8-9	3	#4	9-3	4	#4	9-6	4	#4	10-0	3	#4	9-9	3	#4	10-3	3	#4	10-6	3	#4	11-3	3	#4	11-6	4	#4	12-0
f8	str	3	#4	10-0	3	#4	10-6	3	#4	11-0	3	#4	11-6	3	#4	10-9	3	#4	11-3	3	#4	11-9	3	#4	12-3	3	#4	12-9	3	#4	13-6
f9	str													3	#4	12-0	3	#4	12-6	3	#4	12-9	3	#4	13-6	3	#4	13-9	3	#4	14-6
m1	str	3	#4	16-0	3	#4	16-9	3	#4	17-9	3	#4	18-6	3	#4	19-3	3	#4	20-3	3	#4	21-0	4	#4	22-0	4	#4	22-9	4	#4	23-9
m2	str	1	#4	16-0	1	#4	16-9	1	#4	17-9	1	#4	18-6	1	#4	19-3	1	#4	20-3	1	#4	21-0	1	#4	22-0	1	#4	22-9	1	#4	23-9
m3	str	3	#4	18-3	3	#4	18-9	3	#4	19-9	3	#4	20-9	3	#4	21-6	3	#4	22-3	3	#4	23-3	4	#4	24-0	4	#4	24-9	4	#4	25-6
m4	str	1	#4	18-3	1	#4	18-9	1	#4	19-9	1	#4	20-9	1	#4	21-6	1	#4	22-3	1	#4	23-3	1	#4	24-0	1	#4	24-9	1	#4	25-6
n1	str	3	#4	14-9	3	#4	15-6	3	#4	16-3	3	#4	17-0	3	#4	17-6	3	#4	18-3	3	#4	19-0	4	#4	19-9	4	#4	20-6	4	#4	21-3
n2	str	1	#4	14-9	1	#4	15-6	1	#4	16-3	1	#4	17-0	1	#4	17-6	1	#4	18-3	1	#4	19-0	1	#4	19-9	1	#4	20-6	1	#4	21-3
p	str	4	#5	11-0	4	#5	11-6	4	#5	12-0	4	#5	12-6	4	#5	13-0	4	#5	13-6	4	#5	14-0	4	#5	14-6	4	#5	15-0	4	#5	15-6
q	str	2	#6	13-0	2	#6	13-6	2	#6	15-0	2	#6	15-6	2	#6	15-0	2	#6	15-6	2	#6	16-0	2	#6	16-6	2	#6	17-0	2	#6	17-6
g	str	2	#4	9-3	2	#4	9-9	2	#4	10-0	2	#4	10-6	2	#4	11-0	2	#4	11-3	2	#4	11-9	2	#4	12-3	2	#4	12-9	2	#4	13-3
u	B	7	#4	4-6	7	#4	4-6	7	#4	4-6	8	#4	4-9	8	#4	4-9	8	#4	4-9	8	#4	4-9	9	#4	5-0	9	#4	5-0	9	#4	5-0
v	str	1	#4	14-0	1	#4	14-9	1	#4	15-6	1	#4	16-3	1	#4	17-0	1	#4	17-9	1	#4	18-6	1	#4	19-3	1	#4	20-0	1	#4	20-9
w	str	1	#4	13-6	1	#4	14-0	1	#4	14-6	1	#4	15-3	1	#4	15-9	1	#4	16-3	1	#4	17-0	1	#4	17-6	1	#4	18-0	1	#4	18-6

Pipe Dia	DIMENSIONS																			
	A	B	C	D	E	F	G	H	J	K	L	M	N	P	R	S	T	V	W	X
90"	0-6	2-1	2-0	1-0	5-1	13-3	5-1	9-6	6-9	16-4	7-2	4-6 1/4	0-4	9-1	13-6	6-2	18-6	4-0	6-1	5-5 7/8
96"	0-3	2-2	2-1	1-1	5-4	14-0	5-4	10-0	7-2	17-2	7-6	4-8 3/4	0-3	9-6	14-0	6-6	19-2	4-2	6-4	5-8 7/8
102"	0-1 1/2	2-2	2-3	1-2	5-7	14-9	5-7	10-6	7-6	18-0 5/8	7-10 5/8	4-11 3/4	0-2	10-0	14-9	6-10	20-2	4-5	6-7	5-11 7/8
108"	0-6	2-2	2-5	1-3	5-10	15-6	5-10	11-0	7-10	18-11 1/8	8-3 1/8	5-2 3/4	0-6	10-6	15-6	7-2	21-2	4-8	6-10	6-2 7/8
114"	0-3	2-3	2-6	1-4	6-1	16-3	6-1	11-6	8-2	19-9 1/4	8-7 1/4	5-5 1/4	0-4	10-11	16-0	7-6	21-10	4-10	7-1	6-5 7/8
120"	0-6	2-4	2-8	1-4	6-4	17-0	6-4	12-0	8-6	20-7 1/4	8-11 1/4	5-7 5/8	0-3	11-4	16-6	7-10	22-6	5-0	7-4	6-8 7/8
126"	0-4 1/2	2-6	2-8	1-5	6-7	17-9	6-7	12-6	8-10	21-5 3/4	9-3 7/8	5-10 5/8	0-2	11-10	17-3	8-2	23-6	5-3	7-9	7-2 1/4
132"	0-3	2-7	2-9	1-6	6-10	18-6	6-10	13-0	9-3	22-3 7/8	9-7 7/8	6-1 1/8	0-6	12-3	18-0	8-6	24-5	5-5	8-0	7-5 1/4
138"	0-6	2-7	2-11	1-7	7-1	19-3	7-1	13-6	9-7	23-2 3/8	10-0 3/8	6-4 1/8	0-4	12-9	18-6	8-10	25-2	5-8	8-3	7-8 1/4
144"	0-3	2-8	3-0	1-8	7-4	20-0	7-5	14-0	9-11	24-0 1/2	10-5 1/2	6-7 5/8	0-3	13-3	19-0	9-3	25-10	5-11	8-7	8-0 1/4

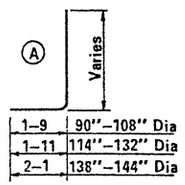

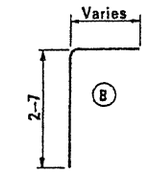

QUANTITIES

Pipe Dia.	Reinf. (lbs)	Conc. (CY)
90"	1235	24.21
96"	1460	26.36
102"	1690	28.83
108"	1805	31.40
114"	2140	33.82
120"	2360	36.39
126"	2745	41.74
132"	3040	44.85
138"	3320	47.94
144"	3720	51.22

NOTE:

Quantities and steel list shown are for one headwall.

DESIGN APPROVED R.C. Brechler	STATE OF ARIZONA DEPARTMENT OF TRANSPORTATION DIVISION OF HIGHWAYS STANDARD DRAWINGS		REVISION 7-76
APPROVED FOR DISTRIBUTION E.E. Hansen	INLET AND OUTLET HEADWALLS 15° SKEW PIPE CULVERT 4:1 SLOPE		STANDARD NO. PH-9 DRAWING NO. B-13.03

DESIGN	CHECKED	DRAWN	
K.W. 9-72	R.L.C. 9-72	LAM 9-72	

STEEL LIST

Mark	Bend	90" Dia			96" Dia			102" Dia			108" Dia			114" Dia			120" Dia			126" Dia			132" Dia			138" Dia			144" Dia		
		No	Size	Lgth	No	Size	Lgth	No	Size	Lgth	No	Size	Lgth	No	Size	Lgth	No	Size	Lgth	No	Size	Lgth	No	Size	Lgth	No	Size	Lgth	No	Size	Lgth
a1	A	5	#5	10-0	5	#5	10-6	5	#6	11-0	4	#6	11-6	5	#6	12-0	5	#6	12-3	5	#7	12-6	5	#7	12-9	5	#8	13-3	6	#8	13-9
a2	A	4	#6	10-9	5	#6	11-3	5	#6	11-9	4	#6	12-0	4	#7	12-6	5	#7	13-0	5	#7	13-3	5	#8	13-9	5	#8	14-0	5	#8	14-6
a3	A	4	#6	11-6	4	#6	12-0	5	#7	12-3	4	#7	12-6	4	#7	13-3	4	#8	13-9	5	#8	14-0	5	#8	14-3	5	#8	14-9	5	#8	15-3
a4	A	4	#6	12-0	4	#7	12-6	4	#7	13-0	4	#7	13-0	4	#8	13-9	4	#8	14-3	4	#8	14-9	5	#8	15-0	5	#8	15-6	5	#8	16-0
a5	A										4	#8	13-6	4	#8	14-3	4	#8	14-9	4	#8	15-3	4	#8	15-9	5	#8	16-3	5	#8	16-9
a6	A																														
a7	A																			3	#4	6-3	8	#4	7-0	14	#4	7-6	19	#4	8-3
a8	A	4	#4	10-0	5	#4	10-6	5	#5	10-9	5	#5	11-0	5	#5	11-9	4	#6	12-0	5	#6	12-6	5	#7	12-9	5	#7	13-3	5	#7	13-9
a9	A	4	#5	10-6	4	#5	11-0	5	#5	11-6	5	#6	11-9	5	#6	12-6	4	#6	12-6	4	#7	13-0	4	#7	13-6	5	#7	14-0	5	#7	14-6
a10	A	4	#5	11-3	4	#6	11-9	4	#6	12-3	4	#7	12-9	5	#7	13-3	4	#7	13-3	4	#7	13-9	4	#7	14-3	4	#8	14-9	5	#8	15-3
a11	A	4	#6	12-0	4	#7	12-6	3	#7	13-0	4	#7	13-3	4	#7	14-0	4	#7	14-0	4	#8	14-6	4	#8	15-0	4	#8	15-6	4	#8	16-0
a12	A																4	#8	14-6	3	#8	15-0	4	#8	15-6	4	#8	16-3	4	#8	16-9
a13	A																									3	#4	8-0	7	#4	8-9
b1	str	2	#4	16-3	2	#4	17-3	2	#4	18-3	2	#4	19-3	2	#4	20-3	2	#4	21-3	2	#4	22-3	2	#4	23-3	2	#4	24-3	2	#4	25-3
b2	str	10	#4	16-0	10	#4	17-0	12	#4	18-0	12	#4	19-0	12	#4	20-0	12	#4	21-0	14	#4	22-0	14	#4	23-0	14	#4	24-0	14	#4	25-0
b3	str	2	#4	12-0	2	#4	16-9	2	#4	8-9	2	#4	12-9	2	#4	17-0	2	#4	19-3	2	#4	11-9	2	#4	15-0	2	#4	18-9	2	#4	23-0
b4	str				2	#4	4-9							2	#4	5-3	2	#4	8-0				2	#4	4-3	2	#4	9-3	2	#4	11-3
b5	str																														
b6	str																														
b7	str	2	#4	15-3	2	#4	16-0	2	#4	16-9	2	#4	17-6	2	#4	18-3	2	#4	19-0	2	#4	19-9	2	#4	20-6	2	#4	21-3	2	#4	22-0
b8	str	10	#4	15-0	10	#4	15-9	10	#4	16-6	12	#4	17-3	12	#4	18-0	12	#4	18-9	14	#4	19-6	14	#4	20-3	14	#4	21-0	14	#4	21-9
b9	str	2	#4	10-0	2	#4	13-0	2	#4	15-9	2	#4	9-9	2	#4	12-9	2	#4	16-0	2	#4	10-0	2	#4	12-9	2	#4	15-9	2	#4	19-0
b10	str				2	#4	3-9	2	#4	6-9				2	#4	4-0	2	#4	7-0				2	#4	3-6	2	#4	6-9	2	#4	9-9
b11	str																														
b12	str																														
c	str	5	#4	10-6	5	#4	11-0	5	#4	11-6	5	#4	12-0	5	#4	12-6	5	#4	13-0	5	#4	13-6	5	#4	14-0	5	#4	14-6	5	#4	15-0
d	A	6	#6	12-3	6	#6	12-9	6	#7	13-3	6	#7	13-9	6	#7	14-6	6	#7	15-0	6	#7	15-6	6	#7	16-0	6	#7	16-6	6	#7	17-0
e1	str	5	#4	3-6	5	#4	3-6	5	#4	3-9	4	#4	3-9	5	#4	4-0	5	#5	4-0	5	#5	4-3	5	#5	4-3	5	#6	4-6	6	#6	4-9
e2	str	4	#4	3-9	5	#4	3-9	5	#4	4-0	4	#4	4-0	4	#5	4-3	5	#5	4-3	5	#5	4-6	5	#6	4-9	5	#6	5-0	5	#6	5-3
e3	str	4	#4	4-0	4	#4	4-0	5	#5	4-3	4	#5	4-3	4	#5	4-6	4	#5	4-9	5	#6	4-9	5	#6	5-0	5	#6	5-3	5	#7	5-6
e4	str	4	#4	4-3	4	#5	4-3	4	#5	4-6	4	#5	4-6	4	#5	4-9	4	#6	5-0	4	#6	5-3	5	#6	5-6	5	#7	5-9	5	#7	6-0
e5	str										4	#5	4-9	4	#6	5-0	4	#6	5-3	4	#6	5-6	4	#7	5-9	5	#7	6-0	5	#8	6-3
e6	str																														
e7	str	2	#4	4-3	2	#5	4-6	2	#5	4-9	2	#5	5-0	2	#6	5-3	2	#6	5-6	2	#6	5-9	2	#7	6-0	2	#7	6-3	2	#8	6-6
e8	str	10	#4	4-3	11	#5	4-6	11	#5	4-9	12	#5	5-0	12	#6	5-3	13	#6	5-6	13	#6	5-9	14	#7	6-0	14	#7	6-3	14	#8	6-6
e9	str	3	#4	4-3	3	#5	4-6	3	#5	4-9	3	#5	5-0	4	#6	5-3	4	#6	5-6	4	#6	5-9	4	#7	6-0	4	#7	6-3	4	#8	6-6
e10	str	4	#4	4-3	4	#5	4-3	4	#5	4-6	4	#5	4-9	4	#6	5-0	4	#6	5-3	4	#6	5-6	4	#7	5-9	4	#7	6-0	4	#8	6-3
e11	str	4	#4	4-0	4	#5	4-0	4	#5	4-3	4	#5	4-6	5	#5	4-9	4	#6	5-0	4	#6	5-3	4	#6	5-6	4	#7	5-9	4	#7	6-0
e12	str	4	#4	3-9	4	#4	3-9	5	#4	4-0	5	#4	4-3	5	#5	4-6	4	#5	4-9	4	#6	4-9	4	#6	5-0	4	#6	5-3	5	#7	5-6
e13	str	4	#4	3-6	5	#4	3-6	5	#4	3-9	5	#4	3-9	5	#4	4-0	4	#5	4-3	4	#5	4-6	4	#5	4-9	5	#6	5-0	5	#6	5-3
e14	str																4	#5	4-0	5	#5	4-3	5	#5	4-3	5	#6	4-6	5	#6	4-9
f1	str	3	#4	8-6	3	#4	9-0	4	#4	9-3	4	#4	9-9	4	#4	10-0	4	#4	10-3	4	#4	10-6	4	#4	10-9	4	#4	11-3	4	#4	11-9
f2	str	3	#4	9-0	3	#4	9-6	3	#4	10-0	4	#4	10-6	4	#4	10-9	4	#4	11-0	4	#4	11-6	4	#4	11-9	4	#4	12-3	4	#4	12-6
f3	str	3	#4	9-9	3	#4	10-0	3	#4	10-9	3	#4	11-3	3	#4	11-9	4	#4	11-9	4	#4	12-0	4	#4	12-6	3	#4	13-0	4	#4	13-3
f4	str	3	#4	10-3	3	#4	10-9	3	#4	11-3	3	#4	11-9	3	#4	12-3	3	#4	12-9	4	#4	13-0	4	#4	13-6	3	#4	13-9	3	#4	14-3
f5	str																									3	#4	14-3	3	#4	14-9
f6	str	4	#4	8-3	4	#4	8-6	4	#4	9-0	4	#4	9-3	4	#4	9-9	4	#4	10-3	4	#4	10-6	4	#4	10-9	4	#4	11-3	4	#4	11-9
f7	str	4	#4	9-3	4	#4	9-6	4	#4	9-9	4	#4	10-3	3	#4	10-6	3	#4	11-0	4	#4	11-6	4	#4	11-9	4	#4	12-3	4	#4	12-6
f8	str	3	#4	10-3	3	#4	10-6	4	#4	10-9	4	#4	11-3	3	#4	11-3	3	#4	12-0	3	#4	12-6	3	#4	12-9	4	#4	13-3	4	#4	13-6
f9	str													3	#4	12-3	3	#4	12-6	3	#4	13-3	3	#4	13-6	3	#4	14-3	3	#4	14-6
m1	str	3	#4	18-9	3	#4	19-9	3	#4	21-3	3	#4	22-0	4	#4	23-3	4	#4	24-6	4	#4	25-6	4	#4	26-6	4	#4	27-9	4	#4	28-6
m2	str	1	#4	18-9	1	#4	19-9	1	#4	21-3	1	#4	22-0	1	#4	23-3	1	#4	24-6	1	#4	25-6	1	#4	26-6	1	#4	27-9	1	#4	28-6
m3	str	3	#4	19-6	3	#4	20-6	3	#4	21-6	3	#4	22-6	4	#4	23-3	4	#4	24-3	4	#4	25-3	4	#4	26-3	4	#4	27-3	4	#4	28-3
m4	str	1	#4	19-6	1	#4	20-6	1	#4	21-6	1	#4	22-6	1	#4	23-3	1	#4	24-3	1	#4	25-3	1	#4	26-3	1	#4	27-3	1	#4	28-3
n1	str	3	#4	16-0	3	#4	16-9	3	#4	17-6	3	#4	18-3	4	#4	19-0	4	#4	19-9	4	#4	20-6	4	#4	21-3	4	#4	22-3	4	#4	23-3
n2	str	1	#4	16-0	1	#4	16-9	1	#4	17-6	1	#4	18-3	1	#4	19-0	1	#4	19-9	1	#4	20-6	1	#4	21-3	1	#4	22-3	1	#4	23-3
p	str	4	#5	11-0	4	#5	11-6	4	#5	12-0	4	#5	12-6	4	#5	13-0	4	#5	13-6	4	#5	14-0	4	#5	14-6	4	#5	15-0	4	#5	15-6
q	str	2	#6	13-0	2	#6	13-6	2	#6	14-0	2	#6	14-6	2	#6	15-0	2	#6	15-6	2	#6	16-0	2	#6	16-6	2	#6	17-0	2	#6	17-6
g	str	2	#4	9-6	2	#4	9-9	2	#4	10-3	2	#4	10-9	2	#4	11-0	2	#4	11-6	2	#4	12-0	2	#4	12-6	2	#4	13-0	2	#4	13-6
u	B	7	#4	4-6	7	#4	4-6	7	#4	4-6	8	#4	4-9	8	#4	4-9	8	#4	4-9	8	#4	4-9	9	#4	5-0	9	#4	5-0	9	#4	5-0
v	str	1	#4	16-3	1	#4	17-3	1	#4	18-3	1	#4	19-3	1	#4	20-3	1	#4	21-3	1	#4	22-3	1	#4	23-3	1	#4	24-3	1	#4	25-3
w	str	1	#4	15-3	1	#4	15-9	1	#4	16-6	1	#4	17-3	1	#4	17-9	1	#4	18-6	1	#4	19-3	1	#4	20-3	1	#4	20-9	1	#4	21-6

Pipe Dia	DIMENSIONS																		
	A	B	C	D	E	F	G	H	J	K	L	M	N	P	R	S	T	V	W	X
90"	0-3	2-1	2-3	0-9	5-1	16-0	5-1	9-6	7-4	19-1	7-2	4-6 1/4	0-3	9-1	15-0	7-0	20-0	4-0	6-1	5-5 7/8
96"	0-1 1/2	2-2	2-4	0-10	5-4	17-0	5-4	10-0	7-9	20-2	7-6	4-8 3/4	0-3	9-6	15-9	7-5	20-11	4-2	6-4	5-8 7/8
102"	0-6	2-2	2-6	0-11	5-7	18-0	5-7	10-6	8-2	21-3 5/8	7-10 5/8	4-11 3/4	0-3	10-0	16-6	7-9	21-11	4-5	6-7	5-11 7/8
108"	0-4 1/2	2-3	2-8	0-11	5-10	19-0	5-10	11-0	8-7	22-4 5/8	8-2 5/8	5-2	0-3	10-5	17-3	8-1	22-10	4-7	6-10	6-2 7/8
114"	0-3	2-4	2-10	0-11	6-1	20-0	6-1	11-6	9-0	23-5 5/8	8-6 5/8	5-4 5/8	0-3	10-10	18-0	8-6	23-9	4-9	7-1	6-5 7/8
120"	0-1 1/2	2-4	2-11	1-1	6-4	21-0	6-4	12-0	9-2	24-7 1/4	8-11 1/4	5-7 5/8	0-3	11-4	18-9	8-11	24-9	5-0	7-4	6-8 7/8
126"	0-6	2-6	2-10	1-3	6-7	22-0	6-7	12-6	9-6	25-8 3/4	9-3 3/4	5-10 5/8	0-3	11-10	19-6	9-3	25-9	5-3	7-9	7-2 1/4
132"	0-4 1/2	2-7	3-0	1-3	6-10	23-0	6-10	13-0	9-10	26-9 7/8	9-7 7/8	6-1 1/8	0-3	12-3	20-3	9-7	26-8	5-5	8-0	7-5 1/4
138"	0-3	2-7	3-1	1-5	7-1	24-0	7-1	13-6	10-3	27-11 3/8	10-0 3/8	6-4 1/8	0-3	12-9	21-0	10-0	27-8	5-8	8-3	7-8 1/4
144"	0-1 1/2	2-8	3-3	1-5	7-4	25-0	7-5	14-0	10-7	29-0 1/2	10-5 1/2	6-7 5/8	0-3	13-3	21-9	10-5	28-7	5-11	8-7	8-0 1/4

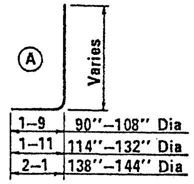

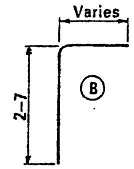

QUANTITIES

Pipe Dia.	Reinf. (lbs)	Conc. (CY)
90"	1435	27.29
96"	1680	29.93
102"	1915	32.73
108"	2180	35.65
114"	2560	38.73
120"	2890	41.76
126"	3180	47.88
132"	3610	51.49
138"	4060	55.22
144"	4530	59.31

NOTE:

Quantities and steel list shown are for one headwall.

DESIGN APPROVED	STATE OF ARIZONA DEPARTMENT OF TRANSPORTATION DIVISION OF HIGHWAYS STANDARD DRAWINGS	REVISION 7-76
R.C. Brechler		
APPROVED FOR DISTRIBUTION	INLET AND OUTLET HEADWALLS 15° SKEW PIPE CULVERT 6:1 SLOPE	STANDARD NO. PH-10 DRAWING NO. B-13.04

DESIGN KW 9-72 | DRAWN LAM 9-72 | CHECKED RLC 9-72

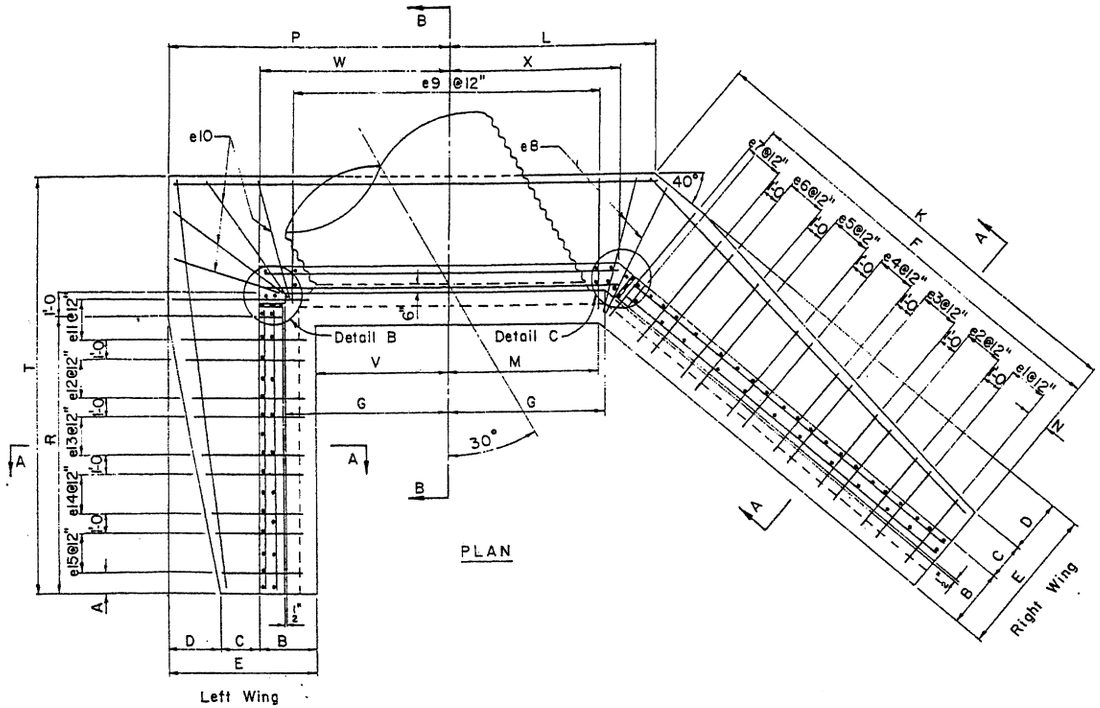

PLAN

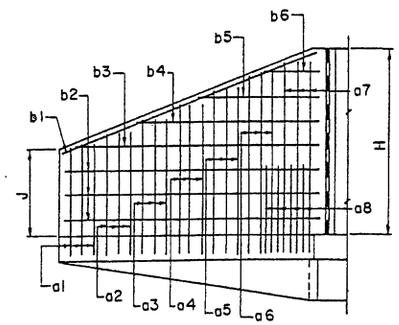

Back Face

RIGHT WING ELEVATION

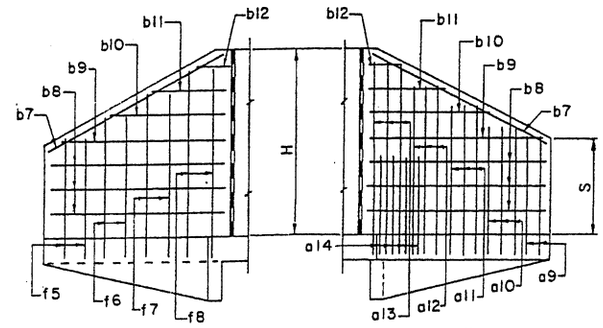

Front Face

Back Face

LEFT WING ELEVATION

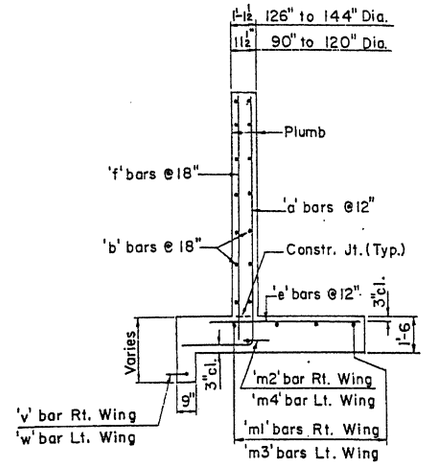

SECTION A-A

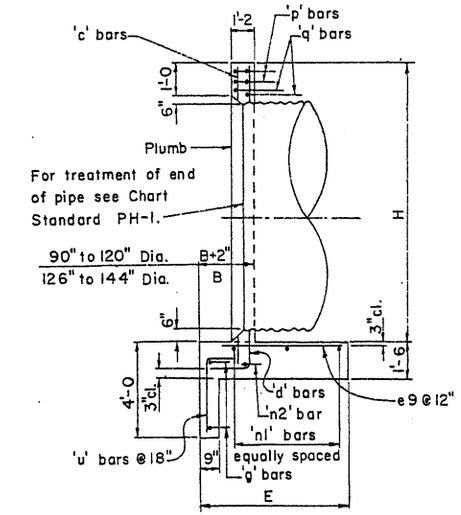

SECTION B-B

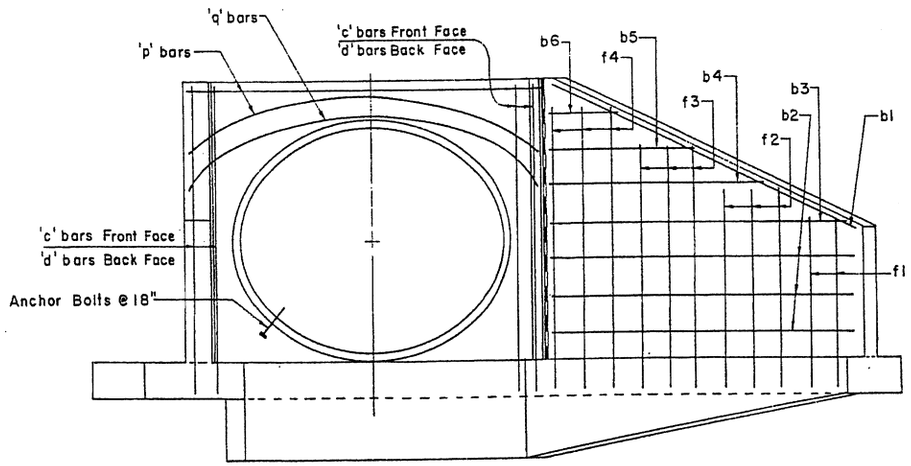

ELEVATION

Notes: For General Notes and Misc. Details see Std. PH-1.
For steel list and bend diagrams see Std. PH-12, PH-13, or PH-14.

DESIGN	K.W.	9-72	NO.	DESCRIPTION OF REVISIONS	MADE BY	DATE
DRAWN	G.H.	9-72	1	Revised ℄ of pipe.	WSK/KWS	2-11-75
CHECKED	R.L.C.	9-72	2	Wall Thicknesses	G.H.	7-14-76

DESIGN APPROVED: R. C. Bucklin

APPROVED FOR DISTRIBUTION: E. P. Scandlin

STATE OF ARIZONA
DEPARTMENT OF TRANSPORTATION
DIVISION OF HIGHWAYS
STANDARD DRAWINGS

INLET & OUTLET HEADWALLS
30° SKEW PIPE CULVERT

REVISION 7-14-76

STANDARD NO. PH-11

DRAWING NO. B-14.01

STEEL LIST

Mark	Bend	90" Dia No	90" Dia Size	90" Dia Lgth	96" Dia No	96" Dia Size	96" Dia Lgth	102" Dia No	102" Dia Size	102" Dia Lgth	108" Dia No	108" Dia Size	108" Dia Lgth	114" Dia No	114" Dia Size	114" Dia Lgth
a1	A	3	#4	8-3	3	#4	8-6	3	#4	8-9	3	#4	9-0	3	#4	9-3
a2	A	3	#4	9-3	3	#5	9-6	3	#5	9-9	3	#5	9-9	3	#5	10-3
a3	A	3	#5	10-3	3	#5	10-6	3	#5	10-9	3	#5	10-9	3	#6	11-3
a4	A	3	#6	11-3	3	#6	11-6	3	#6	11-6	3	#6	11-9	3	#7	12-3
a5	A	2	#6	12-0	3	#7	12-6	2	#7	12-6	2	#7	12-9	3	#7	13-3
a6	A							2	#7	13-3	2	#8	13-9	2	#8	14-3
a7	A															
a8	A															
a9	A	3	#4	7-9	3	#4	8-0	3	#4	8-3	3	#4	8-6	3	#4	9-0
a10	A	3	#5	9-0	3	#5	9-6	3	#5	9-9	3	#5	10-0	3	#5	10-3
a11	A	2	#6	10-6	3	#6	11-0	3	#6	11-3	3	#6	11-6	2	#6	11-9
a12	A	2	#6	11-6	2	#7	12-0	2	#7	12-6	3	#7	13-0	2	#7	13-0
a13	A													2	#7	14-0
a14	A													3	#4	6-0
b1	str	2	#4	13-6	2	#4	14-3	2	#4	15-0	2	#4	15-9	2	#4	16-9
b2	str	8	#4	13-3	8	#4	14-0	8	#4	14-9	8	#4	15-6	10	#4	16-6
b3	str	2	#4	10-0	2	#4	11-6	2	#4	13-3	2	#4	14-9	2	#4	11-9
b4	str	2	#4	5-6	2	#4	6-9	2	#4	8-6	2	#4	10-0	2	#4	7-0
b5	str							2	#4	3-3	2	#4	5-6	2	#4	2-0
b6	str															
b7	str	2	#4	10-3	2	#4	10-9	2	#4	11-3	2	#4	11-9	2	#4	12-3
b8	str	8	#4	9-6	8	#4	10-0	8	#4	10-6	8	#4	11-0	8	#4	11-6
b9	str	2	#4	6-6	2	#4	7-6	2	#4	8-6	2	#4	9-6	2	#4	10-6
b10	str	2	#4	3-6	2	#4	4-6	2	#4	5-6	2	#4	6-6	2	#4	7-6
b11	str				2	#4	1-6	2	#4	2-6	2	#4	3-6	2	#4	4-6
b12	str													2	#4	1-6
c	str	5	#4	10-6	5	#4	11-0	5	#4	11-6	5	#4	12-0	5	#4	12-6
d	A	6	#6	12-3	6	#6	12-9	6	#7	13-3	6	#7	13-9	6	#7	14-6
e1	str	3	#4	2-3	3	#4	2-3	3	#4	2-6	3	#4	2-6	3	#4	2-6
e2	str	3	#4	2-9	3	#4	2-9	3	#4	3-0	3	#4	3-0	3	#4	3-0
e3	str	3	#4	3-3	3	#4	3-6	3	#4	3-3	3	#4	3-6	3	#4	3-6
e4	str	3	#4	3-9	3	#4	4-0	3	#4	3-9	3	#4	4-0	3	#5	4-3
e5	str	2	#4	4-3	3	#5	4-6	2	#5	4-3	3	#5	4-6	3	#5	4-9
e6	str							2	#5	4-9	2	#5	5-0	3	#6	5-3
e7	str															
e8	str	2	#4	4-3	2	#5	4-6	2	#5	4-9	2	#5	5-0	2	#6	5-3
e9	str	11	#4	4-3	11	#5	4-6	12	#5	4-9	12	#5	5-0	13	#6	5-3
e10	str	4	#4	4-3	4	#5	4-6	4	#5	4-9	4	#5	5-0	4	#6	5-3
e11	str	2	#4	4-3	2	#5	4-6	3	#5	4-9	3	#5	4-6	2	#6	5-3
e12	str	3	#4	3-6	3	#4	3-9	3	#4	4-0	3	#5	4-0	2	#5	4-9
e13	str	3	#4	3-0	3	#4	3-0	3	#4	3-3	3	#4	3-3	3	#5	4-0
e14	str	3	#4	2-3	3	#4	2-3	3	#4	2-6	3	#4	2-9	3	#4	3-3
e15	str													3	#4	2-6
f1	str	3	#4	6-6	3	#4	6-9	3	#4	7-0	3	#4	7-3	3	#4	7-6
f2	str	3	#4	8-0	3	#4	8-3	3	#4	8-6	3	#4	8-9	3	#4	9-0
f3	str	2	#4	9-3	2	#4	9-9	3	#4	10-0	3	#4	10-3	3	#4	10-6
f4	str	2	#4	10-6	2	#4	10-9	2	#4	11-0	2	#4	11-6	3	#4	11-9
f5	str	3	#4	6-0	3	#4	6-0	3	#4	6-6	3	#4	6-9	3	#4	7-0
f6	str	2	#4	8-3	3	#4	8-3	3	#4	8-9	3	#4	9-0	2	#4	9-3
f7	str	2	#4	9-9	2	#4	10-6	2	#4	11-0	2	#4	11-3	2	#4	10-9
f8	str													2	#4	12-3
m1	str	3	#4	15-6	3	#4	16-0	3	#4	17-0	3	#4	18-0	4	#4	19-0
m2	str	1	#4	15-6	1	#4	16-0	1	#4	17-0	1	#4	18-0	1	#4	19-0
m3	str	3	#4	14-0	3	#4	14-9	3	#4	15-6	3	#4	16-3	4	#4	17-0
m4	str	1	#4	14-0	1	#4	14-9	1	#4	15-6	1	#4	16-3	1	#4	17-0
n1	str	3	#4	15-9	3	#4	16-9	3	#4	17-9	3	#4	18-9	4	#4	19-6
n2	str	1	#4	15-9	1	#4	16-9	1	#4	17-9	1	#4	18-9	1	#4	19-6
p	str	4	#5	11-9	4	#5	12-6	4	#5	13-0	4	#5	13-6	4	#5	14-3
q	str	2	#6	13-9	2	#6	14-6	2	#6	15-0	2	#6	15-6	2	#6	16-3
g	str	2	#4	10-0	2	#4	10-6	2	#4	11-3	2	#4	11-9	2	#4	12-3
u	B	7	#4	4-6	8	#4	4-6	8	#4	4-6	8	#4	4-9	9	#4	4-9
v	str	1	#4	14-3	1	#4	15-0	1	#4	15-9	1	#4	16-6	1	#4	17-3
w	str	1	#4	9-6	1	#4	9-9	1	#4	10-3	1	#4	10-9	1	#4	11-3

Mark	120" Dia No	120" Dia Size	120" Dia Lgth	126" Dia No	126" Dia Size	126" Dia Lgth	132" Dia No	132" Dia Size	132" Dia Lgth	138" Dia No	138" Dia Size	138" Dia Lgth	144" Dia No	144" Dia Size	144" Dia Lgth
a1	3	#4	9-6	3	#5	9-9	3	#5	10-0	3	#5	10-3	4	#5	10-9
a2	3	#5	10-6	3	#5	10-9	3	#6	11-0	3	#6	11-3	3	#6	12-0
a3	3	#6	11-6	3	#6	11-9	3	#7	12-0	3	#7	12-3	3	#7	12-9
a4	3	#7	12-3	3	#7	12-9	3	#8	13-0	3	#8	13-3	3	#8	13-9
a5	2	#8	13-3	3	#8	13-9	3	#8	14-0	3	#8	14-3	3	#8	14-9
a6	2	#8	14-0	2	#8	14-6	3	#8	14-9	3	#8	15-3	3	#8	15-9
a7	2	#8	14-9	2	#8	15-3	2	#8	15-9	3	#8	16-3	2	#8	16-9
a8	3	#4	6-3	3	#4	6-9	7	#4	7-6	8	#4	8-0	7	#4	8-3
a9	3	#4	9-3	3	#4	9-6	3	#5	9-9	3	#5	10-0	3	#5	10-3
a10	3	#6	10-9	3	#6	11-0	3	#6	11-3	3	#6	11-6	3	#6	11-9
a11	3	#7	12-3	3	#7	12-6	3	#7	12-9	3	#7	13-0	3	#8	13-3
a12	2	#7	13-6	2	#7	13-9	3	#8	14-3	3	#8	14-6	3	#8	15-0
a13	2	#7	14-9	2	#7	15-3	2	#8	15-9	2	#8	16-0	3	#8	16-6
a14	4	#4	6-0	4	#4	6-0	4	#4	7-0	4	#4	7-0	8	#4	7-0
b1	2	#4	17-9	2	#4	18-6	2	#4	19-3	2	#4	20-3	2	#4	21-0
b2	10	#4	17-6	10	#4	18-3	10	#4	19-0	10	#4	19-9	10	#4	20-6
b3	2	#4	13-3	2	#4	14-9	2	#4	16-3	2	#4	17-6	2	#4	19-6
b4	2	#4	8-6	2	#4	10-3	2	#4	11-9	2	#4	13-0	2	#4	14-9
b5	2	#4	3-9	2	#4	5-3	2	#4	7-0	2	#4	8-6	2	#4	10-3
b6										2	#4	4-0	2	#4	5-6
b7	2	#4	12-9	2	#4	13-3	2	#4	14-0	2	#4	14-6	2	#4	15-0
b8	8	#4	12-0	10	#4	12-6	10	#4	13-0	10	#4	13-6	10	#4	14-0
b9	2	#4	11-6	2	#4	9-6	2	#4	10-6	2	#4	11-3	2	#4	12-3
b10	2	#4	8-6	2	#4	6-6	2	#4	7-6	2	#4	8-3	2	#4	9-3
b11	2	#4	5-6	2	#4	3-3	2	#4	4-6	2	#4	5-3	2	#4	6-6
b12	2	#4	2-6				2	#4	1-3	2	#4	2-3	2	#4	3-3
c	5	#4	13-0	5	#4	13-6	5	#4	14-0	5	#4	14-6	5	#4	15-0
d	6	#7	15-0	6	#7	15-6	6	#7	16-0	6	#7	16-6	6	#7	17-0
e1	3	#4	2-9	3	#4	2-9	3	#4	3-0	3	#4	3-0	4	#4	3-6
e2	3	#4	3-3	3	#4	3-3	3	#4	3-6	3	#4	3-6	3	#4	3-9
e3	3	#4	3-9	3	#4	3-9	3	#4	4-0	3	#5	4-0	3	#5	4-3
e4	3	#5	4-3	3	#5	4-3	3	#5	4-6	3	#5	4-6	3	#6	4-9
e5	3	#5	4-6	3	#6	4-9	3	#6	5-0	3	#6	5-0	3	#6	5-3
e6	2	#6	5-0	2	#6	5-3	2	#7	5-6	3	#7	5-9	3	#7	6-0
e7	2	#6	5-6	2	#7	5-9	2	#7	6-0	3	#7	6-3	3	#8	6-6
e8	2	#6	5-6	2	#7	5-9	2	#7	6-0	2	#7	6-3	2	#8	6-6
e9	13	#6	5-6	14	#7	5-9	14	#7	6-0	15	#7	6-3	16	#8	6-6
e10	4	#6	5-6	4	#7	5-9	4	#7	6-0	4	#7	6-3	4	#8	6-6
e11	2	#6	5-6	2	#7	5-9	2	#7	6-0	3	#7	6-3	3	#8	6-6
e12	2	#6	5-0	3	#6	5-0	3	#6	5-3	3	#7	5-6	3	#7	5-9
e13	3	#5	4-3	3	#5	4-3	3	#5	4-6	3	#5	4-6	3	#6	4-9
e14	3	#4	3-6	3	#4	3-6	3	#4	3-9	3	#4	3-9	3	#5	4-0
e15	3	#4	2-9	3	#4	2-9	3	#4	3-0	3	#4	3-0	3	#4	3-6
f1	4	#4	7-6	4	#4	7-9	4	#4	8-0	4	#4	8-3	4	#4	8-9
f2	3	#4	9-6	3	#4	9-9	4	#4	10-0	4	#4	10-3	4	#4	10-6
f3	3	#4	10-9	3	#4	11-3	3	#4	12-0	3	#4	12-3	3	#4	12-6
f4	3	#4	12-3	3	#4	12-9	3	#4	13-3	3	#4	13-9	3	#4	14-0
f5	3	#4	7-3	3	#4	7-6	3	#4	7-9	3	#4	8-0	3	#4	8-3
f6	2	#4	9-6	2	#4	9-9	3	#4	9-9	3	#4	10-3	3	#4	10-6
f7	2	#4	11-0	2	#4	11-3	2	#4	12-0	2	#4	12-6	2	#4	12-9
f8	2	#4	12-6	2	#4	12-9	2	#4	13-9	2	#4	14-0	2	#4	14-3
m1	4	#4	20-0	4	#4	20-9	4	#4	21-6	4	#4	22-6	4	#4	23-3
m2	1	#4	20-0	1	#4	20-9	1	#4	21-6	1	#4	22-6	1	#4	23-3
m3	4	#4	17-6	4	#4	18-3	4	#4	19-0	4	#4	19-9	4	#4	20-6
m4	1	#4	17-6	1	#4	18-3	1	#4	19-0	1	#4	19-9	1	#4	20-6
n1	4	#4	20-3	4	#4	21-3	4	#4	22-0	4	#4	23-0	4	#4	23-6
n2	1	#4	20-3	1	#4	21-3	1	#4	22-0	1	#4	23-0	1	#4	23-6
p	4	#5	14-6	4	#5	15-6	4	#5	16-0	4	#5	16-6	4	#5	17-0
q	2	#6	16-6	2	#6	17-6	2	#6	18-0	2	#6	18-6	2	#6	19-0
g	2	#4	12-9	2	#4	13-3	2	#4	13-9	2	#4	14-3	2	#4	14-9
u	9	#4	4-9	9	#4	4-9	10	#4	5-0	10	#4	5-0	10	#4	5-0
v	1	#4	18-3	1	#4	19-0	1	#4	20-0	1	#4	20-9	1	#4	21-3
w	1	#4	11-9	1	#4	12-3	1	#4	12-9	1	#4	13-3	1	#4	13-6

DIMENSIONS

Pipe Dia	A	B	C	D	E	F	G	H	J	K	L	M	N	P	R	S	T	V	W	X
90"	0-6	2-1	1-4	1-8	5-1	13-3	5-5	9-6	5-3	15-8 1/2	6-10 3/8	5-0 1/4	0-4	9-5	9-6	4-9	14-6	4-4	6-5	5-7
96"	0-3	2-2	1-5	1-9	5-4	14-0	5-9	10-0	5-6	16-6 1/4	7-3 1/4	5-3 7/8	0-3	9-11	10-0	5-0	15-2	4-7	6-9	5-11
102"	0-6	2-2	1-6	1-11	5-7	14-9	6-1	10-6	5-9	17-4 1/4	7-8 1/4	5-7 7/8	0-2	10-6	10-6	5-3	15-11	4-11	7-1	6-3
108"	0-3	2-2	1-8	2-0	5-10	15-6	6-4	11-0	6-0	18-2 3/8	8-0 3/8	5-10 7/8	0-6	11-0	11-0	5-6	16-8	5-2	7-4	6-6
114"	0-6	2-3	1-8	2-2	6-1	16-6	6-8	11-6	6-3	19-3 1/8	8-5 1/8	6-2 1/2	0-6	11-6	11-6	5-9	17-4	5-5	7-8	6-10
120"	0-3	2-4	1-10	2-2	6-4	17-6	6-11	12-0	6-5	20-3 7/8	8-8 7/8	6-5 1/8	0-6	11-11	12-0	6-0	18-0	5-7	7-11	7-1
126"	0-6	2-6	1-8	2-5	6-7	18-3	7-3	12-6	6-8	21-1 7/8	9-1 7/8	6-9 1/8	0-4	12-6	12-6	6-3	18-9	5-11	8-5	7-8 1/8
132"	0-3	2-6	1-10	2-6	6-10	19-0	7-6	13-0	6-11	22-0	9-6	7-0 1/8	0-3	13-0	13-0	6-6	19-6	6-2	8-8	7-11 1/8
138"	0-6	2-7	2-0	2-6	7-1	19-9	7-10	13-6	7-2	22-9 3/4	9-10 3/4	7-3 7/8	0-2	13-6	13-6	6-9	20-2	6-5	9-0	8-3 1/8
144"	0-3	2-8	2-2	2-6	7-4	20-6	8-1	14-0	7-6	23-7 1/2	10-2 1/2	7-6 1/2	0-6	13-11	14-0	7-0	20-10	6-7	9-3	8-6 1/8

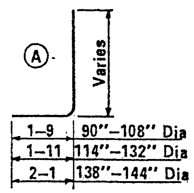

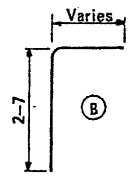

QUANTITIES

Pipe Dia.	Reinf. (lbs)	Conc. (CY)
90"	1065	21.88
96"	1240	23.04
102"	1395	25.20
108"	1505	27.38
114"	1800	29.79
120"	2025	32.22
126"	2250	36.76
132"	2585	39.45
138"	2775	42.38
144"	3075	45.27

NOTE:

Quantities and steel list shown are for one headwall.

Registered Professional Engineer, Certificate [stamp] R.C. Brechler, Dec. 31, 19.., Arizona

DESIGN APPROVED	STATE OF ARIZONA DEPARTMENT OF TRANSPORTATION DIVISION OF HIGHWAYS STANDARD DRAWINGS	REVISION 7-76
R.C. Brechler (signature)		
APPROVED FOR DISTRIBUTION (signature)	INLET AND OUTLET HEADWALLS 30° SKEW PIPE CULVERT 2:1 SLOPE	STANDARD NO. PH-12 DRAWING NO. B-14.02

DESIGN	K W	9-72
DRAWN	LAM	9-72
CHECKED	RLC	9-72

STEEL LIST

Mark	Bend	90" Dia			96" Dia			102" Dia			108" Dia			114" Dia			120" Dia			126" Dia			132" Dia			138" Dia			144" Dia		
		No	Size	Lgth	No	Size	Lgth	No	Size	Lgth	No	Size	Lgth	No	Size	Lgth	No	Size	Lgth	No	Size	Lgth	No	Size	Lgth	No	Size	Lgth	No	Size	Lgth
a1	A	4	#5	10-0	4	#5	10-6	4	#5	10-9	4	#6	11-3	4	#6	11-9	4	#6	12-3	4	#7	12-6	5	#7	13-0	5	#7	13-3	5	#8	13-9
a2	A	3	#5	10-6	4	#6	11-0	4	#6	11-3	4	#6	11-9	4	#6	12-3	4	#7	12-9	4	#7	13-0	4	#8	13-9	5	#8	14-3	5	#8	14-9
a3	A	3	#6	11-0	3	#6	11-9	3	#6	12-0	4	#7	12-6	4	#7	13-0	4	#7	13-3	4	#8	13-9	4	#8	14-3	4	#8	15-0	4	#8	15-6
a4	A	3	#6	11-9	3	#6	12-3	3	#7	12-6	3	#7	13-0	4	#7	13-9	4	#8	14-0	4	#8	14-6	4	#8	15-0	4	#8	15-6	4	#8	16-0
a5	A	3	#6	12-0	2	#7	12-6	3	#7	13-0	3	#7	13-6	3	#8	14-3	3	#8	14-6	4	#8	15-0	4	#8	15-6	3	#8	16-3	4	#8	16-9
a6	A																														
a7	A																														
a8	A																			3	#4	8-0	7	#4	8-3	10	#4	8-9	11	#4	8-3
a9	A	3	#4	9-0	3	#4	9-6	4	#5	9-9	4	#5	10-0	4	#6	10-9	4	#6	11-0	4	#6	11-3	4	#6	11-9	4	#6	12-0	4	#7	12-6
a10	A	3	#4	9-9	3	#5	10-3	3	#5	10-9	4	#6	11-0	4	#6	11-6	4	#6	12-0	4	#7	12-3	4	#7	12-6	4	#7	13-0	4	#7	13-6
a11	A	3	#5	10-6	3	#6	11-0	3	#6	11-6	3	#7	12-0	3	#7	12-6	4	#7	13-0	4	#8	13-3	4	#8	13-6	4	#8	14-0	4	#8	14-6
a12	A	3	#6	11-3	3	#6	11-9	3	#7	12-3	3	#7	12-9	3	#7	13-3	3	#8	14-0	3	#8	14-3	4	#8	14-6	4	#8	15-0	4	#8	15-6
a13	A	2	#6	11-9	3	#7	12-3	3	#7	12-9	2	#7	13-6	3	#8	14-0	2	#8	14-9	3	#8	15-0	3	#8	15-6	3	#8	16-0	4	#8	16-6
a14	A																			2	#4	7-0	6	#4	6-6	6	#4	7-3	7	#4	7-9
b1	str	2	#4	15-0	2	#4	15-9	2	#4	16-6	2	#4	17-3	2	#4	18-0	2	#4	18-9	2	#4	19-6	2	#4	20-0	2	#4	20-9	2	#4	21-3
b2	str	10	#4	14-9	10	#4	15-6	12	#4	16-3	12	#4	17-0	12	#4	17-9	12	#4	18-6	14	#4	19-3	14	#4	19-9	14	#4	20-6	14	#4	21-0
b3	str	2	#4	9-9	2	#4	13-6	2	#4	7-9	2	#4	10-6	2	#4	13-6	2	#4	16-9	2	#4	10-6	2	#4	13-6	2	#4	16-3	2	#4	19-3
b4	str				2	#4	4-6							2	#4	4-0	2	#4	7-3				2	#4	4-3	2	#4	7-0	2	#4	10-0
b5	str																														
b6	str	2	#4	13-6	2	#4	14-0	2	#4	14-9	2	#4	15-6	2	#4	16-0	2	#4	16-6	2	#4	17-3	2	#4	18-0	2	#4	18-6	2	#4	19-0
b7	str	8	#4	13-6	10	#4	14-0	10	#4	14-9	10	#4	15-6	10	#4	16-0	12	#4	16-6	12	#4	17-3	12	#4	18-0	12	#4	18-6	12	#4	19-0
b8	str	2	#4	12-9	2	#4	8-9	2	#4	10-9	2	#4	12-9	2	#4	14-6	2	#4	10-9	2	#4	12-6	2	#4	14-6	2	#4	16-6	2	#4	18-6
b9	str	2	#4	6-9	2	#4	2-9	2	#4	4-9	2	#4	6-9	2	#4	8-6	2	#4	4-9	2	#4	6-6	2	#4	8-9	2	#4	10-9	2	#4	12-6
b10	str													2	#4	2-9							2	#4	2-6	2	#4	4-6	2	#4	6-9
b11	str																														
b12	str																														
c	str	5	#4	10-6	5	#4	11-0	5	#4	11-6	5	#4	12-0	5	#4	12-6	5	#4	13-0	5	#4	13-6	5	#4	14-0	5	#4	14-6	5	#4	15-0
d	A	6	#6	12-3	6	#6	12-9	6	#7	13-3	6	#7	13-9	6	#7	14-6	6	#7	15-0	6	#7	15-6	6	#7	16-0	6	#7	16-6	6	#7	17-0
e1	str	4	#4	3-0	4	#4	3-3	4	#4	3-3	4	#4	3-6	4	#4	3-9	4	#4	4-0	4	#5	4-3	5	#5	4-3	5	#5	4-6	5	#5	4-9
e2	str	3	#4	3-3	4	#4	3-6	4	#4	3-6	4	#4	3-9	4	#5	4-3	4	#5	4-3	4	#5	4-6	4	#6	4-6	5	#6	4-9	5	#6	5-0
e3	str	3	#4	3-6	3	#4	3-9	3	#4	3-9	4	#5	4-3	4	#5	4-6	4	#5	4-6	4	#6	4-9	4	#6	5-0	4	#6	5-0	4	#7	5-3
e4	str	3	#4	3-9	3	#4	4-0	3	#5	4-3	3	#5	4-6	4	#5	4-9	4	#6	4-9	4	#6	5-0	4	#7	5-3	4	#7	5-6	4	#7	5-9
e5	str	3	#4	4-0	3	#5	4-3	3	#5	4-6	3	#5	4-9	3	#6	5-0	4	#6	5-0	4	#7	5-3	4	#7	5-6	4	#7	5-9	4	#8	6-0
e6	str																														
e7	str																														
e8	str	2	#4	4-3	2	#5	4-6	2	#5	4-9	2	#5	5-0	2	#6	5-0	2	#6	5-3	2	#7	5-6	2	#7	5-9	2	#7	6-0	2	#8	6-3
e9	str	10	#4	4-3	11	#5	4-6	11	#5	4-9	12	#5	5-0	12	#6	5-0	13	#6	5-3	13	#7	5-6	14	#7	5-9	14	#7	6-0	15	#8	6-3
e10	str	4	#4	4-3	4	#5	4-6	4	#5	4-9	4	#5	5-0	4	#6	5-0	4	#6	5-3	4	#7	5-6	4	#7	5-9	4	#7	6-0	4	#8	6-3
e11	str	3	#4	4-0	3	#5	4-3	4	#5	4-6	3	#5	4-9	3	#6	4-9	3	#6	5-0	3	#7	5-3	3	#7	5-6	4	#7	5-9	4	#8	6-0
e12	str	3	#4	3-9	3	#4	4-0	4	#4	4-0	3	#5	4-6	3	#5	4-6	3	#6	4-9	3	#6	5-0	4	#6	5-3	4	#7	5-6	4	#7	5-9
e13	str	3	#4	3-6	3	#4	3-9	4	#4	3-9	3	#4	4-0	3	#4	4-3	4	#5	4-6	4	#5	4-9	4	#6	4-9	4	#6	5-0	4	#6	5-3
e14	str	3	#4	3-3	3	#4	3-6	4	#4	3-3	4	#4	3-9	4	#4	4-0	4	#4	4-3	4	#4	4-3	4	#5	4-6	4	#5	4-9	4	#5	5-0
e15	str	3	#4	3-0	3	#4	3-0				4	#4	3-6	4	#4	3-9	4	#4	4-0	4	#4	4-0	4	#4	4-3	4	#4	4-6	4	#4	4-6
f1	str	4	#4	8-3	4	#4	8-9	3	#4	9-0	3	#4	9-6	4	#4	9-9	4	#4	10-3	4	#4	10-6	4	#4	11-0	4	#4	11-3	4	#4	11-9
f2	str	4	#4	9-3	4	#4	9-9	3	#4	9-9	3	#4	10-3	3	#4	10-9	3	#4	11-3	4	#4	11-6	4	#4	12-0	4	#4	12-3	4	#4	12-9
f3	str	3	#4	10-3	3	#4	10-9	3	#4	10-6	3	#4	11-0	3	#4	11-6	3	#4	12-0	3	#4	12-6	3	#4	13-0	4	#4	13-3	4	#4	13-9
f4	str							3	#4	11-3	3	#4	11-9	3	#4	12-3	3	#4	12-6	3	#4	13-3	3	#4	13-9	3	#4	14-3	3	#4	14-9
f5	str	4	#4	7-3	4	#4	7-9	4	#4	8-0	4	#4	8-6	3	#4	8-9	3	#4	9-0	3	#4	9-6	4	#4	9-9	4	#4	10-0	4	#4	10-6
f6	str	3	#4	8-9	3	#4	9-3	4	#4	9-6	4	#4	10-0	3	#4	9-9	3	#4	10-3	3	#4	10-6	3	#4	11-3	3	#4	11-6	4	#4	12-0
f7	str	3	#4	10-0	3	#4	10-3	3	#4	11-0	3	#4	11-6	3	#4	10-9	3	#4	11-3	3	#4	11-9	3	#4	12-3	3	#4	12-9	3	#4	13-6
f8	str													3	#4	12-0	3	#4	12-6	3	#4	12-9	3	#4	13-6	3	#4	13-9	3	#4	14-6
m1	str	3	#4	17-0	3	#4	17-9	3	#4	18-6	3	#4	19-6	3	#4	20-3	3	#4	21-0	3	#4	21-9	4	#4	22-6	4	#4	23-3	4	#4	23-9
m2	str	1	#4	17-0	1	#4	17-9	1	#4	18-6	1	#4	19-6	1	#4	20-3	1	#4	21-0	1	#4	21-9	1	#4	22-6	1	#4	23-3	1	#4	23-9
m3	str	3	#4	18-3	3	#4	18-9	3	#4	19-9	3	#4	20-9	3	#4	21-6	3	#4	22-3	3	#4	23-3	4	#4	24-0	4	#4	24-9	4	#4	25-6
m4	str	1	#4	18-3	1	#4	18-9	1	#4	19-9	1	#4	20-9	1	#4	21-6	1	#4	22-3	1	#4	23-3	1	#4	24-0	1	#4	24-9	1	#4	25-6
n1	str	3	#4	15-6	3	#4	16-6	3	#4	17-6	3	#4	18-6	3	#4	19-3	3	#4	20-0	3	#4	21-0	4	#4	21-9	4	#4	22-9	4	#4	23-3
n2	str	1	#4	15-6	1	#4	16-6	1	#4	17-6	1	#4	18-6	1	#4	19-3	1	#4	20-0	1	#4	21-0	1	#4	21-9	1	#4	22-9	1	#4	23-3
p	str	4	#5	11-9	4	#5	12-3	4	#5	13-0	4	#5	13-6	4	#5	14-0	4	#5	14-6	4	#5	15-3	4	#5	15-9	4	#5	16-6	4	#5	17-0
q	str	2	#6	12-9	2	#6	13-3	2	#6	14-0	2	#6	14-6	2	#6	15-0	2	#6	15-6	2	#6	16-3	2	#6	16-9	2	#6	17-6	2	#6	18-0
g	str	2	#4	9-6	2	#4	10-0	2	#4	10-9	2	#4	11-3	2	#4	11-9	2	#4	12-0	2	#4	12-9	2	#4	13-3	2	#4	14-0	2	#4	14-3
u	B	7	#4	4-0	8	#4	4-0	8	#4	4-0	8	#4	4-0	9	#4	4-3	9	#4	4-3	9	#4	4-3	10	#4	4-3	10	#4	4-6	10	#4	4-6
v	str	1	#4	15-9	1	#4	16-3	1	#4	17-3	1	#4	17-9	1	#4	18-6	1	#4	19-3	1	#4	20-3	1	#4	20-6	1	#4	21-3	1	#4	21-9
w	str	1	#4	14-0	1	#4	14-6	1	#4	15-0	1	#4	15-9	1	#4	16-3	1	#4	16-9	1	#4	17-6	1	#4	17-9	1	#4	18-6	1	#4	19-0

Pipe Dia	DIMENSIONS																		
	A	B	C	D	E	F	G	H	J	K	L	M	N	P	R	S	T	V	W	X
90"	0-6	2-1	2-2	0-10	5-1	14-9	5-5	9-6	7-2	17-2 1/2	6-10 1/4	5-0 1/4	0-2	9-5	13-6	6-2	18-6	4-4	6-5	5-7
96"	0-3	2-2	2-4	0-10	5-4	15-6	5-9	10-0	7-6	18-0 1/4	7-3 1/4	5-3 7/8	0-6	9-11	14-0	6-6	19-2	4-7	6-9	5-11
102"	0-1 1/2	2-2	2-6	0-11	5-7	16-3	6-1	10-6	7-11	18-10 1/4	7-8 1/4	5-7 7/8	0-4	10-6	14-9	6-10	20-2	4-11	7-1	6-3
108"	0-6	2-3	2-7	1-0	5-10	17-0	6-4	11-0	8-3	19-8 3/8	8-0 3/8	5-10 7/8	0-3	11-0	15-6	7-2	21-2	5-2	7-4	6-6
114"	0-3	2-3	2-8	1-2	6-1	17-9	6-8	11-6	8-8	20-6 1/8	8-5 1/8	6-2 1/2	0-2	11-6	16-0	7-6	21-10	5-5	7-8	6-10
120"	0-6	2-4	2-10	1-2	6-4	18-6	6-10	12-0	9-1	21-3 7/8	8-7 7/8	6-4 1/8	0-6	11-10	16-6	7-10	22-6	5-6	7-10	7-0
126"	0-4 1/2	2-6	2-10	1-3	6-7	19-3	7-3	12-6	9-5	22-1 7/8	9-1 7/8	6-9 1/8	0-4	12-6	17-3	8-2	23-6	5-11	8-5	7-8 1/8
132"	0-3	2-6	3-0	1-4	6-10	19-9	7-6	13-0	9-10	22-9	9-6	7-0 1/8	0-2	13-0	18-0	8-6	24-6	6-2	8-8	7-11 1/8
138"	0-6	2-7	3-1	1-5	7-1	20-6	7-10	13-6	10-2	23-6 3/4	9-10 3/4	7-3 7/8	0-6	13-6	18-6	8-10	25-2	6-5	9-0	8-3 1/8
144"	0-3	2-8	3-2	1-6	7-4	21-0	8-1	14-0	10-7	24-1 1/2	10-2 1/2	7-6 1/2	0-3	13-11	19-0	9-3	25-10	6-7	9-3	8-6 1/8

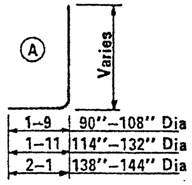

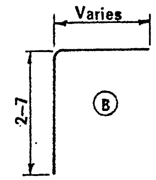

QUANTITIES

Pipe Dia.	Reinf. (lbs)	Conc. (CY)
90"	1305	25.47
96"	1520	27.84
102"	1755	30.49
108"	1950	33.10
114"	2245	35.65
120"	2470	38.14
126"	2895	43.91
132"	3270	46.95
138"	3455	50.13
144"	3900	53.09

NOTE:

Quantities and steel list shown are for one headwall.

DESIGN APPROVED R.C. Brechler

APPROVED FOR DISTRIBUTION

STATE OF ARIZONA
DEPARTMENT OF TRANSPORTATION
DIVISION OF HIGHWAYS
STANDARD DRAWINGS

INLET AND OUTLET HEADWALLS
30° SKEW PIPE CULVERT
4:1 SLOPE

REVISION 7-76

STANDARD NO. PH-13

DRAWING NO. B-14.03

DESIGN K W 9-72 | DRAWN LAM 9-72 | CHECKED RLC 9-72

STEEL LIST

Mark	Bend	90" Dia			96" Dia			102" Dia			108" Dia			114" Dia		
		No	Size	Lgth	No	Size	Lgth	No	Size	Lgth	No	Size	Lgth	No	Size	Lgth
a1	A	5	#5	10-6	4	#5	11-0	5	#6	11-3	5	#6	11-9	5	#6	12-3
a2	A	5	#5	11-0	4	#6	11-3	4	#6	11-9	5	#6	12-3	5	#7	12-9
a3	A	5	#6	11-6	4	#6	11-9	4	#6	12-3	4	#7	12-9	4	#7	13-3
a4	A	4	#6	12-0	4	#6	12-3	4	#7	12-6	4	#7	13-3	4	#7	13-9
a5	A				4	#7	12-9	4	#7	13-3	3	#7	13-9	4	#8	14-3
a6	A															
a7	A															
a8	A															
a9	A	4	#4	10-0	5	#4	10-6	5	#5	10-9	5	#5	11-0	5	#5	11-9
a10	A	4	#5	10-6	4	#5	11-0	5	#5	11-6	5	#6	11-9	5	#6	12-6
a11	A	4	#5	11-3	4	#6	11-9	4	#6	12-3	4	#7	12-9	5	#7	13-3
a12	A	4	#6	12-0	4	#7	12-6	3	#7	13-0	4	#7	13-3	4	#7	14-0
a13	A															
a14	A															
b1	str	2	#4	18-6	2	#4	19-3	2	#4	20-0	2	#4	20-9	2	#4	21-6
b2	str	10	#4	18-3	12	#4	19-0	12	#4	19-9	12	#4	20-6	12	#4	21-3
b3	str	2	#4	15-0	2	#4	5-9	2	#4	9-9	2	#4	15-0	2	#4	19-6
b4	str													2	#4	5-9
b5	str															
b6	str															
b7	str	2	#4	15-3	2	#4	16-0	2	#4	16-9	2	#4	17-6	2	#4	18-3
b8	str	10	#4	15-0	10	#4	15-9	10	#4	16-6	12	#4	17-3	12	#4	18-0
b9	str	2	#4	10-0	2	#4	13-0	2	#4	15-9	2	#4	9-9	2	#4	12-9
b10	str				2	#4	3-9	2	#4	6-9				2	#4	4-0
b11	str															
b12	str															
c	str	5	#4	10-6	5	#4	11-0	5	#4	11-6	5	#4	12-0	5	#4	12-6
d	A	6	#6	12-3	6	#6	12-9	6	#7	13-3	6	#7	13-9	6	#7	14-6
e1	str	5	#4	3-3	4	#4	3-6	5	#4	3-9	5	#4	4-0	5	#4	4-3
e2	str	5	#4	3-6	4	#4	3-9	4	#4	4-0	5	#4	4-3	5	#5	4-6
e3	str	5	#4	3-9	4	#4	4-0	4	#4	4-3	4	#5	4-6	4	#5	4-9
e4	str	4	#4	4-0	4	#4	4-3	4	#5	4-6	4	#5	4-9	4	#5	5-0
e5	str				4	#5	1-6	4	#5	4-9	4	#5	5-0	4	#6	5-3
e6	str															
e7	str															
e8	str	2	#4	4-3	2	#5	4-6	2	#5	4-9	2	#5	5-0	2	#6	5-3
e9	str	11	#4	4-3	12	#5	4-6	12	#5	4-9	13	#5	5-0	13	#6	5-3
e10	str	3	#4	4-3	3	#5	4-6	3	#5	4-9	3	#5	5-0	4	#6	5-3
e11	str	4	#4	4-0	4	#5	4-3	4	#5	4-6	4	#5	4-8	4	#6	5-0
e12	str	4	#4	3-9	4	#5	4-0	4	#5	4-3	4	#5	4-6	5	#5	4-9
e13	str	4	#4	3-6	4	#4	3-9	5	#4	4-0	5	#4	4-3	5	#5	4-6
e14	str	4	#4	3-3	5	#4	3-6	5	#4	3-9	5	#4	4-0	5	#4	4-3
e15	str															
f1	str	4	#4	8-9	4	#4	9-3	4	#4	9-6	4	#4	10-0	4	#4	10-6
f2	str	3	#4	9-3	4	#4	9-9	4	#4	10-0	4	#4	10-6	4	#4	11-0
f3	str	3	#4	9-9	3	#4	10-3	3	#4	10-9	4	#4	11-0	4	#4	11-6
f4	str	3	#4	10-3	3	#4	10-9	3	#4	11-3	3	#4	11-9	3	#4	12-3
f5	str	4	#4	8-3	4	#4	8-6	4	#4	9-0	4	#4	9-3	4	#4	9-9
f6	str	4	#4	9-3	4	#4	9-6	4	#4	9-9	4	#4	10-3	3	#4	10-6
f7	str	3	#4	10-3	3	#4	10-6	4	#4	10-9	4	#4	11-3	3	#4	11-3
f8	str													3	#4	12-6
m1	str	3	#4	20-6	3	#4	21-6	3	#4	22-3	3	#4	23-0	4	#4	24-0
m2	str	1	#4	20-6	1	#4	21-6	1	#4	22-3	1	#4	23-0	1	#4	24-0
m3	str	3	#4	19-6	3	#4	20-6	3	#4	21-6	3	#4	22-6	4	#4	23-3
m4	str	1	#4	19-6	1	#4	20-6	1	#4	21-6	1	#4	22-6	1	#4	23-3
n1	str	3	#4	15-9	3	#4	16-9	3	#4	17-6	3	#4	18-6	4	#4	19-6
n2	str	1	#4	15-9	1	#4	16-9	1	#4	17-6	1	#4	18-6	1	#4	19-6
p	str	4	#5	11-9	4	#5	12-6	4	#5	13-0	4	#5	13-6	4	#5	14-3
q	str	2	#6	13-9	2	#6	14-6	2	#6	15-0	2	#6	15-6	2	#6	16-3
g	str	2	#4	9-9	2	#4	10-3	2	#4	10-9	2	#4	11-6	2	#4	12-0
u	B	7	#4	4-6	8	#4	4-6	8	#4	4-6	8	#4	4-9	9	#4	4-9
v	str	1	#4	18-6	1	#4	19-9	1	#4	20-3	1	#4	21-3	1	#4	22-0
w	str	1	#4	15-0	1	#4	15-9	1	#4	16-3	1	#4	17-3	1	#4	17-9

Mark	Bend	120" Dia			126" Dia			132" Dia			138" Dia			144" Dia		
		No	Size	Lgth	No	Size	Lgth	No	Size	Lgth	No	Size	Lgth	No	Size	Lgth
a1	A	5	#7	12-9	5	#7	13-0	5	#7	13-6	5	#8	14-0	6	#8	14-6
a2	A	5	#7	13-3	5	#7	13-6	5	#8	14-0	5	#8	14-6	5	#8	15-0
a3	A	5	#7	13-9	5	#8	14-3	5	#8	14-6	5	#8	15-0	5	#8	15-6
a4	A	4	#8	14-3	5	#8	14-9	5	#8	15-0	5	#8	15-6	5	#8	16-0
a5	A	4	#8	14-9	4	#8	15-3	4	#8	15-6	5	#8	16-0	5	#8	16-6
a6	A															
a7	A															
a8	A				3	#4	7-0	8	#4	8-3	14	#4	7-0	19	#4	8-3
a9	A	4	#6	12-0	5	#6	12-6	5	#7	12-9	5	#7	13-3	5	#7	13-9
a10	A	4	#6	12-6	4	#7	13-0	4	#7	13-6	5	#7	14-3	5	#7	14-6
a11	A	4	#7	13-3	4	#7	13-9	4	#7	14-3	4	#8	15-0	5	#8	15-3
a12	A	4	#7	14-0	4	#8	14-6	4	#8	15-0	4	#8	15-6	4	#8	16-0
a13	A	4	#8	14-6	3	#8	15-0	4	#8	15-6	4	#8	16-3	4	#8	16-9
a14	A										3	#4	8-0	7	#4	8-9
b1	str	2	#4	22-3	2	#4	23-0	2	#4	23-9	2	#4	24-6	2	#4	25-3
b2	str	14	#4	22-0	14	#4	22-9	14	#4	23-6	16	#4	24-3	16	#4	25-0
b3	str	2	#4	10-0	2	#4	14-6	2	#4	19-9	2	#4	10-0	2	#4	15-0
b4	str							2	#4	5-9						
b5	str															
b6	str															
b7	str	2	#4	19-0	2	#4	19-9	2	#4	20-6	2	#4	21-3	2	#4	22-0
b8	str	12	#4	18-9	14	#4	19-6	14	#4	20-3	14	#4	21-0	14	#4	21-9
b9	str	2	#4	16-0	2	#4	10-0	2	#4	12-9	2	#4	15-9	2	#4	19-0
b10	str	2	#4	7-0				2	#4	3-6	2	#4	6-9	2	#4	9-9
b11	str															
b12	str															
c	str	5	#4	13-0	5	#4	13-6	5	#4	14-0	5	#4	14-6	5	#4	15-0
d	A	6	#7	15-0	6	#7	15-6	6	#7	16-0	6	#7	16-6	6	#7	17-0
e1	str	5	#5	4-3	5	#5	4-6	5	#5	4-6	5	#6	4-9	6	#6	5-0
e2	str	5	#5	4-6	5	#5	4-9	5	#6	4-9	5	#6	5-3	5	#6	5-6
e3	str	5	#5	4-9	5	#6	5-0	5	#6	5-0	5	#6	5-6	5	#7	5-9
e4	str	4	#6	5-3	5	#6	5-6	5	#7	5-6	5	#7	6-0	5	#7	6-3
e5	str	4	#6	5-6	4	#7	5-9	5	#7	6-0	5	#7	6-3	5	#8	6-6
e6	str															
e7	str															
e8	str	2	#6	5-6	2	#7	5-9	2	#7	6-0	2	#7	6-3	2	#8	6-6
e9	str	14	#6	5-6	14	#7	5-9	15	#7	6-0	16	#7	6-3	16	#8	6-6
e10	str	4	#6	5-6	4	#7	5-9	4	#7	6-0	4	#7	6-3	4	#8	6-6
e11	str	4	#6	5-3	4	#6	5-6	4	#7	5-9	4	#7	6-0	4	#8	6-3
e12	str	4	#6	5-0	4	#6	5-3	4	#6	5-6	4	#7	5-9	4	#7	6-0
e13	str	4	#5	4-9	4	#6	5-0	4	#6	5-3	4	#6	5-6	5	#7	5-9
e14	str	4	#5	4-6	4	#5	4-9	4	#5	4-9	5	#6	5-0	5	#6	5-3
e15	str	4	#5	4-3	5	#5	4-6	5	#5	4-6	5	#6	4-9	5	#6	5-0
f1	str	4	#4	10-9	4	#4	11-3	5	#4	11-9	5	#4	12-0	5	#4	12-6
f2	str	4	#4	11-3	4	#4	11-9	4	#4	12-3	4	#4	12-9	5	#4	13-3
f3	str	4	#4	12-0	4	#4	12-6	4	#4	13-0	4	#4	13-6	4	#4	14-0
f4	str	4	#4	12-6	4	#4	13-0	4	#4	13-9	4	#4	14-0	4	#4	14-6
f5	str	4	#4	10-3	4	#4	10-6	4	#4	10-9	4	#4	11-3	4	#4	11-9
f6	str	3	#4	11-0	4	#4	11-6	4	#4	11-9	4	#4	12-3	4	#4	12-6
f7	str	3	#4	12-0	3	#4	12-6	3	#4	12-9	4	#4	13-3	4	#4	13-6
f8	str	3	#4	12-3	3	#4	13-3	3	#4	13-6	3	#4	14-3	3	#4	14-6
m1	str	4	#4	25-9	4	#4	26-6	4	#4	27-3	4	#4	28-3	4	#4	29-0
m2	str	1	#4	25-9	1	#4	26-6	1	#4	27-3	1	#4	28-3	1	#4	29-0
m3	str	4	#4	24-3	4	#4	25-3	4	#4	26-3	4	#4	27-3	4	#4	28-3
m4	str	1	#4	24-3	1	#4	25-3	1	#4	26-3	1	#4	27-3	1	#4	28-3
n1	str	4	#4	20-3	4	#4	21-0	4	#4	21-9	4	#4	22-9	4	#4	23-6
n2	str	1	#4	20-3	1	#4	21-0	1	#4	21-9	1	#4	22-9	1	#4	23-6
p	str	4	#5	14-6	4	#5	15-6	4	#5	16-0	4	#5	16-6	4	#5	17-0
q	str	2	#6	16-6	2	#6	17-6	2	#6	18-0	2	#6	18-6	2	#6	19-0
g	str	2	#4	12-6	2	#4	13-0	2	#4	13 6	2	#4	14-0	2	#4	14-6
u	B	9	#4	4-9	9	#4	4-9	10	#4	5-0	10	#4	5-0	10	#4	5-0
v	str	1	#4	22-6	1	#4	23-3	1	#4	24-9	1	#4	24-9	1	#4	25-6
w	str	1	#4	18-6	1	#4	19-3	1	#4	20-9	1	#4	20-9	1	#4	21-6

DIMENSIONS

Pipe Dia	A	B	C	D	E	F	G	H	J	K	L	M	N	P	R	S	T	V	W	X
90"	0-3	2-1	2-4	0-8	5-1	18-3	5-6	9-6	7-6	20-8 1/2	6-11 1/2	5-1 1/4	0-4	9-6	15-0	7-0	20-0	4-5	6-6	5-8
96"	0-1 1/2	2-2	2-6	0-8	5-4	19-0	5-9	10-0	8-0	21-6 1/4	7-3 1/4	5-3 7/8	0-3	9-11	15-9	7-5	20-11	4-7	6-9	5-11
102"	0-6	2-3	2-8	0-8	5-7	19-9	6-1	10-6	8-4	22-3 7/8	7-7 7/8	5-7 1/2	0-2	10-5	16-6	7-9	21-10	4-10	7-1	6-3
108"	0-4 1/2	2-2	2-10	0-10	5-10	20-6	6-4	11-0	8-10	23-2 3/8	8-0 3/8	5-10 7/8	0-6	11-0	17-3	8-1	22-11	5-2	7-4	6-6
114"	0-3	2-3	3-0	0-10	6-1	21-3	6-8	11-6	9-3	24-0 1/8	8-5 1/8	6-2 1/2	0-4	11-6	18-0	8-6	23-10	5-5	7-8	6-10
120"	0-1 1/2	2-4	3-0	1-0	6-4	22-0	6-11	12-0	9-8	24-9 7/8	8-8 7/8	6-5 1/8	0-3	11-11	18-9	8-11	24-9	5-7	7-11	7-1
126"	0-6	2-7	3-0	1-0	6-7	22-9	7-3	12-6	10-0	25-7 5/8	9-1 5/8	6-8 3/4	0-2	12-5	19-6	9-3	25-8	5-10	8-5	7-8 1/8
132"	0-4 1/2	2-8	3-2	1-0	6-10	23-6	7-6	13-0	10-6	26-5 1/4	9-5 1/4	6-11 1/2	0-6	12-10	20-3	9-7	26-7	6-0	8-8	7-11 1/8
138"	0-3	2-8	3-5	1-0	7-1	24-3	7-10	13-6	10-11	27-3 3/8	9-10 3/8	7-3 1/2	0-4	13-5	21-0	10-0	27-7	6-4	9-0	8-3 1/8
144"	0-1 1/2	2-8	3-8	1-0	7-4	25-0	8-1	14-0	11-4	28-1 1/2	10-2 1/2	7-6 1/2	0-3	13-11	21-9	10-5	28-7	6-7	9-3	8-6 1/8

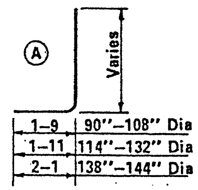

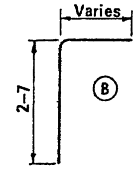

QUANTITIES

Pipe Dia.	Reinf. (lbs)	Conc. (CY)
90"	1430	28.92
96"	1780	31.55
102"	1995	34.33
108"	2220	37.18
114"	2615	40.26
120"	2985	43.12
126"	3370	49.49
132"	3720	52.99
138"	4150	56.89
144"	4600	60.74

NOTE:

Quantities and steel list shown are for one headwall.

Professional ... Registered ... Certificate ... Dec. 31, 19 ... Arizona

DESIGN APPROVED R C Buchler

APPROVED FOR DISTRIBUTION

STATE OF ARIZONA
DEPARTMENT OF TRANSPORTATION
DIVISION OF HIGHWAYS
STANDARD DRAWINGS

INLET AND OUTLET HEADWALLS
30° SKEW PIPE CULVERT
6:1 SLOPE

REVISION 7-76

STANDARD NO. PH-14

DRAWING NO. B-14.04

DESIGN KW 9-72 | DRAWN LAM 9-72 | CHECKED RLC 9-72

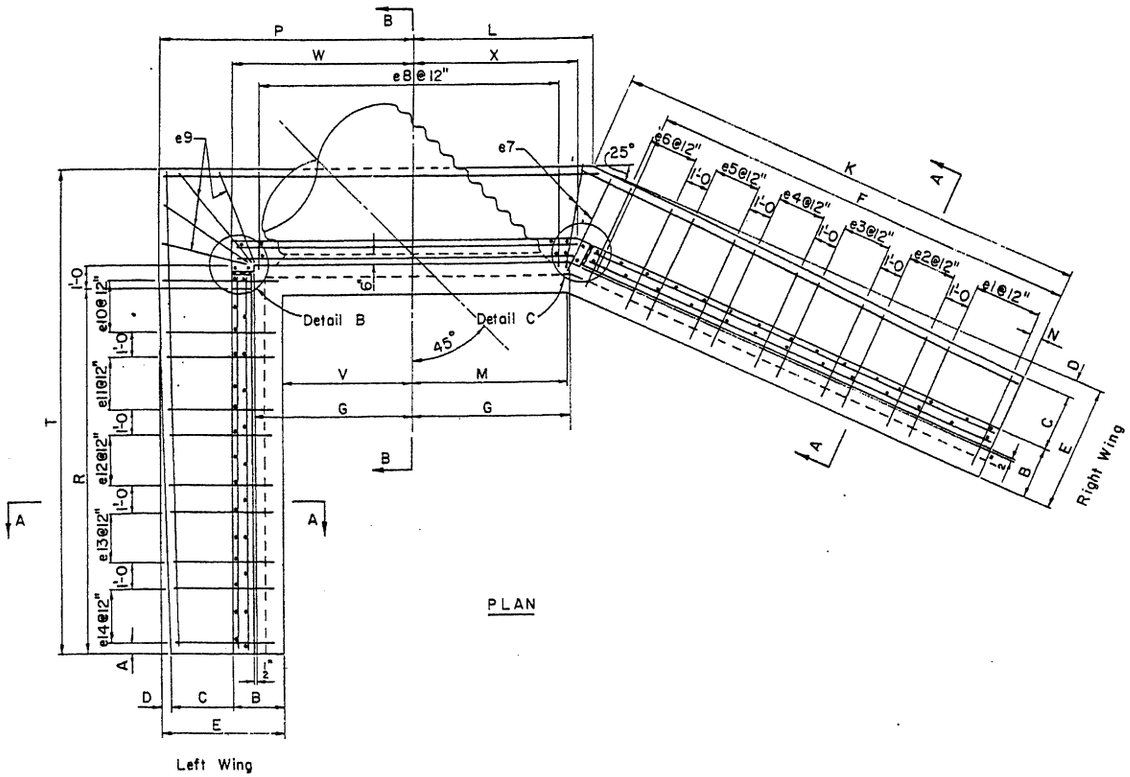

PLAN

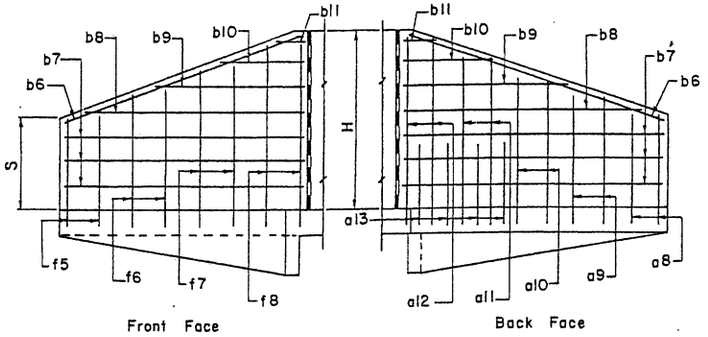

LEFT WING ELEVATION

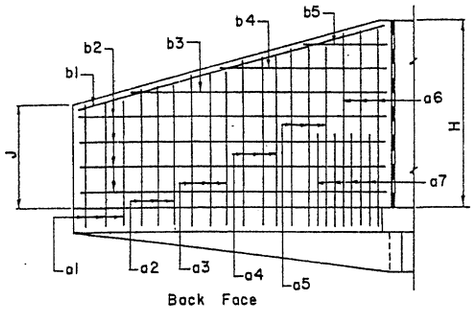

RIGHT WING ELEVATION

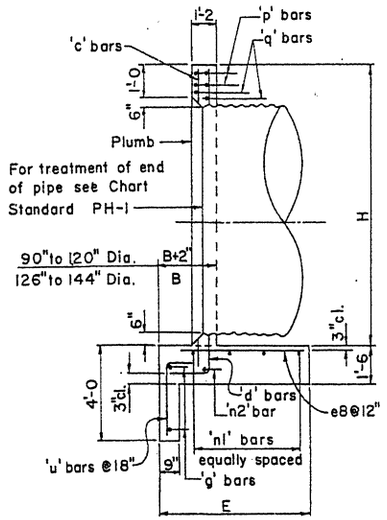

SECTION B-B

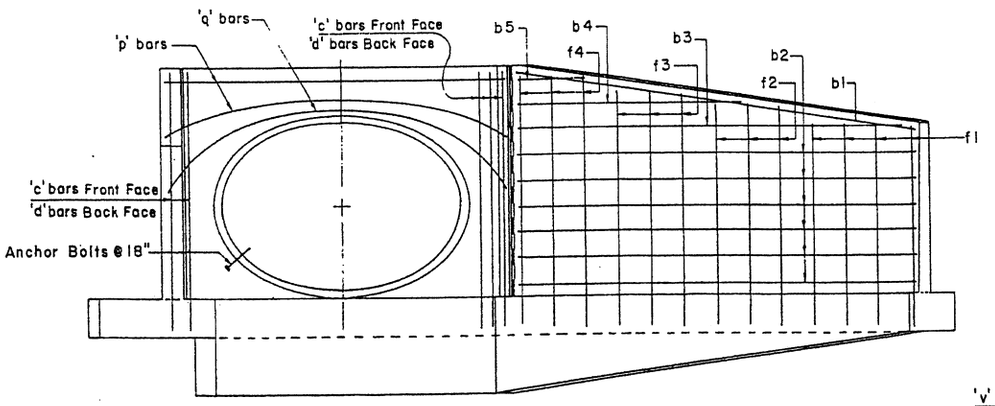

ELEVATION

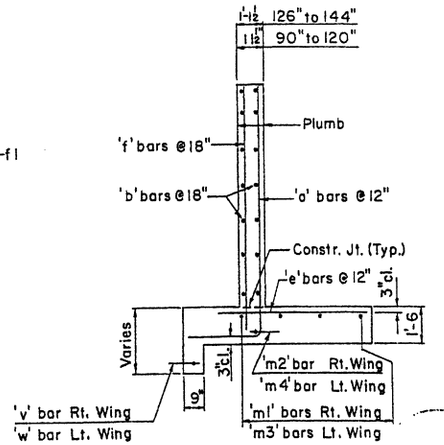

SECTION A-A

Notes: For General Notes and Misc. Details see Std. PH-1.
For steel list and bend diagrams see Std. PH-16, PH-17, or PH-18.

DESIGN	K. W.	9-72	NO.	DESCRIPTION OF REVISIONS	MADE BY	DATE
DRAWN	G. H.	9-72	1	Revised ℄ of pipe.	WSK:sas	2-11-75
CHECKED	R.L.C.	9-72	2	Wall Thicknesses	G.H.	7-14-76
			3			

DESIGN APPROVED	STATE OF ARIZONA DEPARTMENT OF TRANSPORTATION DIVISION OF HIGHWAYS STANDARD DRAWINGS	REVISION 7-14-76
APPROVED FOR DISTRIBUTION	INLET & OUTLET HEADWALLS 45° SKEW PIPE CULVERT	STANDARD NO. PH-15 DRAWING NO. B-15.01

STEEL LIST

Mark	Bend	90" Dia No	90" Dia Size	90" Dia Lgth	96" Dia No	96" Dia Size	96" Dia Lgth	102" Dia No	102" Dia Size	102" Dia Lgth	108" Dia No	108" Dia Size	108" Dia Lgth	114" Dia No	114" Dia Size	114" Dia Lgth
a1	A	4	#4	9-3	4	#5	9-6	4	#5	9-9	4	#5	10-3	4	#5	10-9
a2	A	4	#5	10-0	4	#5	10-3	4	#6	10-6	4	#6	11-0	4	#6	11-6
a3	A	4	#6	10-9	3	#6	11-0	4	#7	11-6	4	#7	11-9	4	#7	12-3
a4	A	4	#7	11-9	3	#7	11-9	3	#7	12-3	4	#7	12-6	4	#7	13-0
a5	A				3	#7	12-6	3	#7	13-0	3	#7	13-6	4	#7	13-9
a6	A															
a7	A										3	#4	6-0	7	#5	6-0
a8	A	3	#4	7-9	3	#4	8-0	3	#4	8-3	3	#4	8-6	3	#4	9-0
a9	A	3	#5	9-3	3	#5	9-6	3	#5	9-9	3	#5	10-0	3	#5	10-6
a10	A	2	#6	10-9	3	#6	11-0	3	#6	11-3	3	#6	11-6	2	#6	12-0
a11	A	2	#6	11-6	2	#7	12-6	2	#7	12-9	3	#7	13-0	2	#7	13-3
a12	A													2	#7	14-3
a13	A													3	#4	6-0
b1	str	2	#4	15-9	2	#4	16-9	2	#4	17-6	2	#4	18-3	2	#4	19-3
b2	str	8	#4	15-6	10	#4	16-6	10	#4	17-3	10	#4	18-0	10	#4	19-0
b3	str	2	#4	15-3	2	#4	10-0	2	#4	12-3	2	#4	15-3	2	#4	17-3
b4	str	2	#4	8-3	2	#4	3-3	2	#4	5-3	2	#4	8-0	2	#4	10-3
b5	str													2	#4	3-0
b6	str	2	#4	10-3	2	#4	10-9	2	#4	11-3	2	#4	11-9	2	#4	12-3
b7	str	8	#4	9-6	8	#4	10-0	8	#4	10-6	8	#4	11-0	8	#4	11-6
b8	str	2	#4	6-6	2	#4	7-6	2	#4	8-6	2	#4	9-6	2	#4	10-6
b9	str	2	#4	3-6	2	#4	4-6	2	#4	5-6	2	#4	6-6	2	#4	7-6
b10	str				2	#4	1-6	2	#4	2-6	2	#4	3-6	2	#4	4-6
b11	str													2	#4	1-6
c	str	5	#4	10-6	5	#4	11-0	5	#4	11-6	5	#4	12-0	5	#4	12-6
d	A	6	#6	12-3	6	#6	12-9	6	#7	13-3	6	#7	13-9	6	#7	14-6
e1	str	4	#4	3-0	4	#4	3-0	4	#4	3-3	4	#4	3-3	4	#4	3-6
e2	str	4	#4	3-3	4	#4	3-3	4	#4	3-6	4	#4	3-6	4	#4	3-9
e3	str	3	#4	3-6	3	#4	3-9	4	#4	3-9	4	#5	4-0	4	#5	4-0
e4	str	3	#4	3-9	3	#4	4-0	3	#5	4-3	4	#5	4-6	4	#5	4-3
e5	str	3	#4	4-0	3	#5	4-3	3	#5	4-6	3	#5	4-9	4	#6	4-9
e6	str															
e7	str	2	#4	4-3	2	#5	4-6	2	#5	4-9	2	#5	5-0	2	#6	5-3
e8	str	14	#4	4-3	14	#5	4-6	15	#5	4-9	15	#5	5-0	16	#6	5-3
e9	str	4	#4	4-3	4	#5	4-6	4	#5	4-9	4	#5	5-0	4	#6	5-3
e10	str	2	#4	4-3	2	#5	4-6	3	#5	4-9	3	#5	4-9	2	#6	5-3
e11	str	3	#4	3-9	3	#4	4-0	3	#4	4-3	3	#5	4-3	2	#5	4-9
e12	str	3	#4	3-3	3	#4	3-6	3	#4	3-9	3	#4	3-9	3	#5	4-3
e13	str	3	#4	3-0	3	#4	3-0	3	#4	3-3	3	#4	3-3	3	#4	4-0
e14	str													3	#4	3-6
f1	str	4	#4	7-6	4	#4	7-9	4	#4	8-3	4	#4	8-6	4	#4	8-9
f2	str	4	#4	8-9	4	#4	9-0	4	#4	9-6	3	#4	9-6	4	#4	9-9
f3	str	3	#4	10-0	4	#4	10-3	4	#4	11-3	3	#4	10-6	3	#4	11-0
f4	str										3	#4	11-6	3	#4	11-9
f5	str	3	#4	6-0	3	#4	6-3	3	#4	6-6	3	#4	6-9	3	#4	7-0
f6	str	2	#4	8-0	3	#4	8-6	3	#4	8-9	3	#4	9-3	2	#4	9-0
f7	str	2	#4	10-0	2	#4	10-8	2	#4	11-0	2	#4	11-6	2	#4	10-9
f8	str													2	#4	12-3
m1	str	3	#4	17-0	3	#4	18-0	3	#4	18-9	3	#4	19-9	4	#4	20-9
m2	str	1	#4	17-0	1	#4	18-0	1	#4	18-9	1	#4	19-9	1	#4	20-9
m3	str	3	#4	14-0	3	#4	14-9	3	#4	15-6	3	#4	16-3	4	#4	17-0
m4	str	1	#4	14-0	1	#4	14-9	1	#4	15-6	1	#4	16-3	1	#4	17-0
n1	str	3	#4	17-6	3	#4	18-6	3	#4	19-6	3	#4	20-3	4	#4	21-6
n2	str	1	#4	17-6	1	#4	18-6	1	#4	19-6	1	#4	20-3	1	#4	21-6
p	str	4	#5	13-0	4	#5	13-9	4	#5	14-3	4	#5	15-0	4	#5	15-9
q	str	2	#6	15-0	2	#6	15-9	2	#6	16-3	2	#6	17-0	2	#6	17-9
g	str	2	#4	12-3	2	#4	12-9	2	#4	13-6	2	#4	14-0	2	#4	14-9
u	B	9	#4	4-6	9	#4	4-6	10	#4	4-6	10	#4	4-9	10	#4	4-9
v	str	1	#4	16-9	1	#4	17-6	1	#4	18-3	1	#4	19-0	1	#4	19-9
w	str	1	#4	9-6	1	#4	9-9	1	#4	10-3	1	#4	10-9	1	#4	11-3

Mark	Bend	120" Dia No	120" Dia Size	120" Dia Lgth	126" Dia No	126" Dia Size	126" Dia Lgth	132" Dia No	132" Dia Size	132" Dia Lgth	138" Dia No	138" Dia Size	138" Dia Lgth	144" Dia No	144" Dia Size	144" Dia Lgth
a1	A	4	#6	11-0	4	#6	11-3	4	#7	11-9	4	#7	12-0	4	#7	12-3
a2	A	4	#7	11-9	4	#7	12-0	4	#7	12-6	4	#8	13-0	4	#8	13-3
a3	A	4	#7	12-9	4	#7	13-0	4	#8	13-3	4	#8	13-9	4	#8	14-0
a4	A	3	#7	13-6	4	#7	13-9	4	#8	14-3	4	#8	14-9	4	#8	15-0
a5	A	3	#7	14-0	3	#7	14-6	3	#8	15-0	4	#8	15-6	4	#8	15-9
a6	A	2	#7	14-6	2	#7	15-3	3	#8	15-6	3	#8	16-3	4	#8	16-9
a7	A	11	#5	6-0	12	#6	6-0	9	#5	7-0	10	#5	7-0	15	#6	7-0
a8	A	3	#4	9-3	3	#4	9-6	3	#5	9-9	3	#5	10-0	3	#5	10-3
a9	A	3	#6	10-9	3	#6	11-0	3	#6	11-3	3	#6	11-6	3	#6	11-9
a10	A	3	#7	12-3	3	#7	12-6	3	#7	12-9	3	#7	13-0	3	#8	13-3
a11	A	2	#7	13-6	2	#7	13-9	3	#8	14-3	3	#8	14-9	3	#8	14-9
a12	A	2	#7	14-9	2	#7	15-3	2	#8	15-9	2	#8	16-0	3	#8	16-3
a13	A	4	#4	6-0	4	#4	6-0	4	#4	7-0	4	#4	7-0	8	#4	7-0
b1	str	2	#4	20-0	2	#4	20-9	2	#4	21-9	2	#4	22-6	2	#4	23-3
b2	str	12	#4	19-9	12	#4	20-6	12	#4	21-6	12	#4	22-3	12	#4	23-0
b3	str	2	#4	12-9	2	#4	14-6	2	#4	17-6	2	#4	20-0	2	#4	22-0
b4	str	2	#4	5-6	2	#4	7-9	2	#4	10-3	2	#4	12-9	2	#4	15-0
b5	str							2	#4	3-0	2	#4	5-6	2	#4	8-0
b6	str	2	#4	12-9	2	#4	13-3	2	#4	14-0	2	#4	14-6	2	#4	15-0
b7	str	8	#4	12-0	10	#4	12-6	10	#4	13-0	10	#4	13-6	10	#4	14-0
b8	str	2	#4	11-6	2	#4	9-6	2	#4	10-6	2	#4	11-3	2	#4	12-3
b9	str	2	#4	8-6	2	#4	6-6	2	#4	7-6	2	#4	8-3	2	#4	9-3
b10	str	2	#4	5-6	2	#4	3-3	2	#4	4-6	2	#4	5-3	2	#4	6-6
b11	str	2	#4	2-6				2	#4	1-3	2	#4	2-3	2	#4	3-3
c	str	5	#4	13-0	5	#4	13-6	5	#4	14-0	5	#4	14-6	5	#4	15-0
d	A	6	#7	15-0	6	#7	15-6	6	#7	16-0	6	#7	16-6	6	#7	17-0
e1	str	4	#4	3-6	4	#4	3-6	4	#4	3-9	4	#4	3-9	4	#5	4-0
e2	str	4	#4	3-9	4	#4	4-0	4	#5	4-0	4	#5	4-0	4	#5	4-6
e3	str	4	#5	4-3	4	#5	4-3	4	#5	4-6	4	#6	4-6	4	#6	4-9
e4	str	3	#5	4-6	4	#6	4-6	4	#6	5-0	4	#6	5-0	4	#7	5-0
e5	str	3	#6	4-9	3	#6	5-0	3	#7	5-3	4	#7	5-6	4	#7	5-6
e6	str	3	#6	5-0	3	#7	5-6	3	#7	5-6	3	#7	5-9	4	#8	6-0
e7	str	2	#6	5-6	2	#7	5-9	2	#7	6-0	2	#7	6-3	2	#8	6-6
e8	str	16	#6	5-6	17	#7	5-9	17	#7	6-0	18	#7	6-3	19	#8	6-6
e9	str	4	#6	5-6	4	#7	5-9	4	#7	6-0	4	#7	6-3	4	#8	6-6
e10	str	2	#6	5-6	2	#7	5-9	2	#7	6-0	3	#7	6-3	3	#8	6-6
e11	str	2	#6	5-0	3	#6	5-0	3	#6	5-3	3	#7	5-6	3	#7	5-9
e12	str	3	#5	4-6	3	#5	4-6	3	#5	4-9	3	#5	5-0	3	#6	5-3
e13	str	3	#4	4-0	3	#4	4-0	3	#4	4-3	3	#4	4-3	3	#5	4-6
e14	str	3	#4	3-6	3	#4	3-6	3	#4	3-9	3	#4	3-9	3	#4	4-0
f1	str	4	#4	9-0	4	#4	9-6	4	#4	9-9	4	#4	10-0	4	#4	10-6
f2	str	4	#4	10-3	4	#4	10-6	4	#4	11-0	4	#4	11-3	4	#4	11-9
f3	str	3	#4	11-6	4	#4	11-9	4	#4	12-3	4	#4	12-6	4	#4	13-3
f4	str	3	#4	12-6	3	#4	13-0	3	#4	13-6	4	#4	13-9	4	#4	14-6
f5	str	3	#4	7-3	3	#4	7-6	3	#4	7-9	3	#4	8-0	3	#4	8-3
f6	str	2	#4	9-6	2	#4	10-0	3	#4	10-0	3	#4	10-3	3	#4	10-9
f7	str	2	#4	11-0	2	#4	11-6	2	#4	12-3	2	#4	12-6	2	#4	13-0
f8	str	2	#4	12-6	2	#4	13-0	2	#4	13-9	2	#4	14-0	2	#4	14-6
m1	str	4	#4	21-6	4	#4	22-6	4	#4	23-3	4	#4	24-0	4	#4	25-0
m2	str	1	#4	21-6	1	#4	22-6	1	#4	23-3	1	#4	24-0	1	#4	25-0
m3	str	4	#4	17-6	4	#4	18-3	4	#4	19-0	4	#4	19-9	4	#4	20-6
m4	str	1	#4	17-6	1	#4	18-3	1	#4	19-0	1	#4	19-9	1	#4	20-6
n1	str	4	#4	22-3	4	#4	23-3	4	#4	24-3	4	#4	25-3	4	#4	26-3
n2	str	1	#4	22-3	1	#4	23-3	1	#4	24-3	1	#4	25-3	1	#4	26-3
p	str	4	#5	16-6	4	#5	17-3	4	#5	17-9	4	#5	18-9	4	#5	19-3
q	str	2	#6	18-6	2	#6	19-3	2	#6	19-9	2	#6	20-9	2	#6	21-3
g	str	2	#4	15-6	2	#4	16-0	2	#4	16-9	2	#4	17-6	2	#4	18-0
u	B	11	#4	4-9	11	#4	4-9	12	#4	5-0	12	#4	5-0	13	#4	5-0
v	str	1	#4	20-6	1	#4	21-9	1	#4	22-6	1	#4	23-3	1	#4	24-0
w	str	1	#4	11-9	1	#4	12-6	1	#4	13-0	1	#4	13-3	1	#4	14-0

Pipe Dia	DIMENSIONS A	B	C	D	E	F	G	H	J	K	L	M	N	P	R	S	T	V	W	X
90"	0-6	2-1	2-2	0-10	5-1	15-6	6-6	9-6	6-3	17-4 5/8	7-4 5/8	6-3 1/8	0-6	10-6	9-6	4-9	14-6	5-5	7-6	6-4 3/8
96"	0-3	2-2	2-2	1-0	5-4	16-4	6-10	10-0	6-7	18-3 1/8	7-9 1/8	6-6 7/8	0-5	11-0	10-0	5-0	15-2	5-8	7-10	6-8 3/8
102"	0-6	2-2	2-4	1-1	5-7	17-2	7-2	10-6	6-11	19-1 3/4	8-1 3/4	6-10 7/8	0-4	11-7	10-6	5-3	15-11	6-0	8-2	7-0 3/8
108"	0-3	2-3	2-3	1-4	5-10	18-0	7-6	11-0	7-3	20-0 1/4	8-6 1/4	7-2 5/8	0-3	12-1	11-0	5-6	16-7	6-3	8-6	7-4 3/8
114"	0-6	2-3	2-4	1-6	6-1	18-10	7-11	11-6	7-6	20-10 7/8	8-11 7/8	7-7 5/8	0-2	12-9	11-6	5-9	17-4	6-8	8-11	7-9 3/8
120"	0-3	2-4	2-5	1-7	6-4	19-8	8-3	12-0	7-10	21-9 1/4	9-4 1/4	7-11 1/2	0-7	13-3	12-0	6-0	18-0	6-11	9-3	8-1 3/8
126"	0-6	2-6	2-4	1-9	6-7	20-6	8-7	12-6	8-2	22-8	9-9	8-3 1/2	0-6	13-10	12-6	6-3	18-9	7-3	9-9	8-10 1/8
132"	0-3	2-7	2-6	1-9	6-10	21-4	8-11	13-0	8-6	23-6 3/8	10-1 1/2	8-7 1/4	0-5	14-4	13-0	6-6	19-5	7-6	10-1	9-2 1/8
138"	0-6	2-7	2-7	1-11	7-1	22-2	9-4	13-6	8-10	24-5	10-7 1/8	9-0 1/4	0-4	15-0	13-6	6-9	20-2	7-11	10-6	9-7 1/8
144"	0-3	2-8	2-8	2-0	7-4	23-0	9-8	14-0	9-2	25-3 1/2	10-11 1/2	9-4	0-3	15-6	14-0	7-0	20-10	8-2	10-10	9-11 1/8

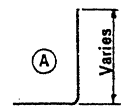

1-9	90"-108" Dia
1-11	114"-132" Dia
2-1	138"-144" Dia

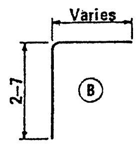

QUANTITIES

Pipe Dia.	Reinf. (lbs)	Conc. (CY)
90"	1215	23.99
96"	1415	26.13
102"	1605	28.52
108"	1765	30.78
114"	2080	33.40
120"	2305	35.99
126"	2585	41.02
132"	2945	44.05
138"	3210	47.29
144"	3705	50.47

NOTE:

Quantities and steel list shown are for one headwall.

DESIGN APPROVED R.C. Brechler

APPROVED FOR DISTRIBUTION

STATE OF ARIZONA
DEPARTMENT OF TRANSPORTATION
DIVISION OF HIGHWAYS
STANDARD DRAWINGS

INLET AND OUTLET HEADWALLS
45° SKEW PIPE CULVERT
2:1 SLOPE

REVISION 7-76

STANDARD NO. PH-16

DRAWING NO. B-15.02

DESIGN KW 9-72 | DRAWN LAM 9-72 | CHECKED RLC 9-72

STEEL LIST

Mark	Bend	90" Dia			96" Dia			102" Dia			108" Dia			114" Dia			120" Dia			126" Dia			132" Dia			138" Dia			144" Dia		
		No	Size	Lgth	No	Size	Lgth	No	Size	Lgth	No	Size	Lgth	No	Size	Lgth	No	Size	Lgth	No	Size	Lgth	No	Size	Lgth	No	Size	Lgth	No	Size	Lgth
a1	A	4	#5	10-6	4	#5	11-0	4	#6	11-6	4	#6	12-0	4	#6	12-6	5	#7	13-0	5	#7	13-3	5	#8	13-9	5	#8	14-3	5	#8	14-9
a2	A	4	#5	11-0	4	#6	11-6	4	#6	12-0	4	#6	12-6	4	#7	13-0	4	#7	13-6	5	#8	13-9	5	#8	14-3	5	#8	14-9	5	#8	15-3
a3	A	3	#6	11-6	4	#6	11-9	4	#6	12-3	4	#7	12-9	4	#7	13-3	4	#7	13-9	4	#8	14-3	5	#8	14-9	5	#8	15-3	5	#8	15-9
a4	A	3	#6	11-9	3	#6	12-3	4	#7	12-9	4	#7	13-3	4	#7	13-9	4	#8	14-3	4	#8	14-9	4	#8	15-3	5	#8	15-9	5	#8	16-3
a5	A	3	#6	12-3	3	#7	12-6	3	#7	13-3	3	#7	13-6	4	#8	14-0	4	#8	14-6	4	#8	15-3	4	#8	15-9	4	#8	16-3	4	#8	16-9
a6	A																														
a7	A																			3	#4	7-0	12	#4	6-6	13	#4	8-3	18	#4	8-9
a8	A	3	#4	9-0	3	#4	9-6	4	#5	9-9	4	#5	10-0	4	#6	10-9	4	#6	11-0	4	#6	11-3	4	#6	11-9	4	#6	12-0	4	#7	12-6
a9	A	3	#4	9-9	3	#5	10-3	3	#5	10-9	4	#6	11-0	4	#6	11-6	4	#6	11-9	4	#7	12-3	4	#7	12-6	4	#7	13-0	4	#7	13-6
a10	A	3	#5	10-6	3	#6	11-0	3	#6	11-6	3	#7	12-0	3	#7	12-6	4	#7	13-0	4	#8	13-3	4	#8	13-6	4	#8	14-0	4	#8	14-6
a11	A	3	#6	11-3	3	#6	11-9	3	#7	12-3	3	#7	12-9	3	#7	13-6	3	#8	14-0	3	#8	14-3	4	#8	14-6	4	#8	15-0	4	#8	15-6
a12	A	2	#6	11-9	3	#7	12-3	3	#7	12-9	2	#7	13-3	3	#8	14-0	2	#8	14-6	3	#8	15-3	3	#8	15-6	3	#8	16-0	4	#8	16-6
a13	A																			2	#4	7-0	6	#4	6-6	6	#4	7-3	7	#4	7-9
b1	str	2	#4	16-6	2	#4	17-3	2	#4	18-0	2	#4	18-9	2	#4	19-6	2	#4	20-3	2	#4	21-3	2	#4	22-0	2	#4	23-0	2	#4	23-9
b2	str	10	#4	16-3	12	#4	17-0	12	#4	17-9	12	#4	18-6	14	#4	19-3	14	#4	20-0	14	#4	21-0	14	#4	21-9	16	#4	22-9	16	#4	23-6
b3	str	2	#4	15-3	2	#4	6-6	2	#4	10-6	2	#4	15-6	2	#4	5-6	2	#4	10-6	2	#4	15-0	2	#4	19-6	2	#4	10-6	2	#4	15-0
b4	str																						2	#4	5-9						
b5	str																														
b6	str	2	#4	13-6	2	#4	14-0	2	#4	14-9	2	#4	15-6	2	#4	16-0	2	#4	16-6	2	#4	17-3	2	#4	18-0	2	#4	18-6	2	#4	19-0
b7	str	8	#4	13-6	10	#4	14-0	10	#4	14-9	10	#4	15-6	10	#4	16-0	12	#4	16-6	12	#4	17-3	12	#4	18-0	12	#4	18-6	12	#4	19-0
b8	str	2	#4	12-9	2	#4	8-9	2	#4	10-9	2	#4	12-9	2	#4	14-6	2	#4	10-9	2	#4	12-6	2	#4	14-6	2	#4	16-6	2	#4	18-6
b9	str	2	#4	6-9	2	#4	2-9	2	#4	4-9	2	#4	8-9	2	#4	8-6	2	#4	4-9	2	#4	6-6	2	#4	8-9	2	#4	10-9	2	#4	12-6
b10	str													2	#4	2-6							2	#4	2-6	2	#4	4-6	2	#4	6-9
b11	str																														
c	str	5	#4	10-6	5	#4	11-0	5	#4	11-6	5	#4	12-0	5	#4	12-6	5	#4	13-0	5	#4	13-6	5	#4	14-0	5	#4	14-6	5	#4	15-0
d	A	6	#6	12-3	6	#6	12-9	6	#7	13-3	6	#7	13-9	6	#7	14-6	6	#7	15-0	6	#7	15-6	6	#7	16-0	6	#7	16-6	6	#7	17-0
e1	str	5	#4	3-3	4	#4	3-6	5	#4	3-6	5	#4	3-9	5	#5	4-0	5	#5	4-0	5	#5	4-3	5	#5	4-3	5	#6	4-9	5	#6	5-0
e2	str	4	#4	3-6	5	#4	3-9	5	#4	3-9	5	#5	4-0	5	#5	4-3	4	#5	4-3	5	#5	4-6	5	#6	4-6	5	#6	5-0	5	#6	5-3
e3	str	4	#4	3-9	5	#4	4-0	5	#5	4-0	5	#5	4-3	5	#5	4-6	4	#5	4-6	4	#6	4-9	5	#6	5-0	5	#7	5-3	5	#7	5-6
e4	str	4	#4	4-0	4	#5	4-3	4	#5	4-3	5	#5	4-6	5	#6	4-9	4	#6	4-9	4	#6	5-0	4	#7	5-3	5	#7	5-6	5	#7	5-9
e5	str																4	#6	5-0	4	#7	5-3	4	#7	5-6	4	#7	5-9	5	#8	6-0
e6	str																														
e7	str	2	#4	4-3	2	#5	4-6	2	#5	4-9	2	#5	5-0	2	#6	5-0	2	#6	5-3	2	#7	5-6	2	#7	5-9	2	#7	6-0	2	#8	6-3
e8	str	13	#4	4-3	14	#5	4-6	15	#5	4-9	15	#5	5-0	16	#6	5-0	17	#6	5-3	17	#7	5-6	18	#7	5-9	19	#7	6-0	20	#8	6-3
e9	str	4	#4	4-3	4	#5	4-6	4	#5	4-9	4	#5	5-0	4	#6	5-0	4	#6	5-3	4	#7	5-6	4	#7	5-9	4	#7	6-0	4	#8	6-3
e10	str	5	#4	4-0	5	#5	4-3	5	#5	4-6	5	#5	4-9	4	#6	4-9	3	#6	5-3	3	#7	5-3	3	#7	5-6	4	#7	5-9	4	#8	6-0
e11	str	5	#4	3-9	5	#4	3-9	5	#4	4-3	4	#5	4-6	4	#5	4-6	3	#6	5-0	3	#6	5-0	4	#6	5-3	4	#7	5-6	4	#7	5-9
e12	str	5	#4	3-3	5	#4	3-6	6	#4	3-9	4	#4	4-3	4	#4	4-3	4	#5	4-9	4	#5	4-9	4	#6	5-0	4	#6	5-3	4	#6	5-6
e13	str										4	#4	3-9	5	#4	4-0	4	#4	4-6	4	#4	4-6	4	#5	4-9	4	#5	5-0	4	#5	5-3
e14	str																4	#4	4-3	4	#4	4-3	4	#4	4-6	4	#4	4-9	4	#4	5-0
f1	str	4	#4	8-9	4	#4	9-3	4	#4	9-9	4	#4	10-3	4	#4	10-6	4	#4	11-0	4	#4	11-3	4	#4	11-9	4	#4	12-3	5	#4	12-6
f2	str	4	#4	9-6	4	#4	10-0	3	#4	10-6	3	#4	10-9	4	#4	11-3	4	#4	11-9	4	#4	12-0	4	#4	12-6	4	#4	12-9	4	#4	13-3
f3	str	4	#4	10-3	4	#4	10-9	3	#4	11-0	3	#4	11-3	3	#4	11-9	3	#4	12-3	4	#4	12-9	4	#4	13-3	4	#4	13-6	4	#4	14-0
f4	str							3	#4	11-3	3	#4	11-9	3	#4	12-3	3	#4	12-9	3	#4	13-3	3	#4	13-9	4	#4	14-3	4	#4	14-9
f5	str	4	#4	7-3	4	#4	7-9	4	#4	8-0	4	#4	8-6	3	#4	8-9	3	#4	9-0	3	#4	9-6	4	#4	9-9	4	#4	10-0	4	#4	10-6
f6	str	3	#4	8-9	3	#4	9-3	4	#4	9-6	4	#4	10-0	3	#4	9-9	3	#4	10-3	3	#4	10-6	3	#4	11-3	3	#4	11-6	4	#4	12-0
f7	str	3	#4	10-0	3	#4	10-9	3	#4	11-0	3	#4	11-6	3	#4	10-9	3	#4	11-3	3	#4	11-9	3	#4	12-3	3	#4	12-9	3	#4	13-6
f8	str													3	#4	12-0	3	#4	12-6	3	#4	12-9	3	#4	13-6	3	#4	13-9	3	#4	14-6
m1	str	3	#4	17-9	3	#4	18-6	3	#4	19-3	3	#4	20-3	3	#4	21-0	3	#4	21-9	3	#4	22-9	4	#4	23-9	4	#4	24-9	4	#4	25-6
m2	str	1	#4	17-9	1	#4	18-6	1	#4	19-3	1	#4	20-3	1	#4	21-0	1	#4	21-9	1	#4	22-9	1	#4	23-9	1	#4	24-9	1	#4	25-6
m3	str	3	#4	18-3	3	#4	18-9	3	#4	19-9	3	#4	20-9	3	#4	21-6	3	#4	22-3	3	#4	23-3	4	#4	24-0	4	#4	24-9	4	#4	26-6
m4	str	1	#4	18-3	1	#4	18-9	1	#4	19-9	1	#4	20-9	1	#4	21-6	1	#4	22-3	1	#4	23-3	1	#4	24-0	1	#4	24-9	1	#4	26-6
n1	str	3	#4	17-9	3	#4	18-6	3	#4	19-6	3	#4	20-6	3	#4	21-6	3	#4	22-3	3	#4	23-3	4	#4	24-0	4	#4	25-0	4	#4	26-0
n2	str	1	#4	17-9	1	#4	18-6	1	#4	19-6	1	#4	20-6	1	#4	21-6	1	#4	22-3	1	#4	23-3	1	#4	24-0	1	#4	25-0	1	#4	26-0
p	str	4	#5	13-9	4	#5	14-6	4	#5	15-3	4	#5	15-9	4	#5	16-6	4	#5	17-3	4	#5	18-0	4	#5	18-9	4	#5	19-6	4	#5	20-3
q	str	2	#6	14-9	2	#6	15-6	2	#6	16-3	2	#6	16-9	2	#6	17-6	2	#6	18-3	2	#6	19-0	2	#6	19-9	2	#6	20-6	2	#6	21-3
g	str	2	#4	12-0	2	#4	12-6	2	#4	13-0	2	#4	13-6	2	#4	14-6	2	#4	15-3	2	#4	15-9	2	#4	16-3	2	#4	17-3	2	#4	17-9
u	B	9	#4	4-0	9	#4	4-0	10	#4	4-0	10	#4	4-0	10	#4	4-3	11	#4	4-3	11	#4	4-3	12	#4	4-3	12	#4	4-6	13	#4	4-6
v	str	1	#4	17-0	1	#4	17-9	1	#4	18-9	1	#4	19-6	1	#4	20-0	1	#4	20-9	1	#4	21-9	1	#4	22-6	1	#4	23-6	1	#4	24-3
w	str	1	#4	14-0	1	#4	14-6	1	#4	15-0	1	#4	15-6	1	#4	16-3	1	#4	16-9	1	#4	17-6	1	#4	17-9	1	#4	18-6	1	#4	19-0

Pipe Dia	DIMENSIONS																			
	A	B	C	D	E	F	G	H	J	K	L	M	N	P	R	S	T	V	W	X
90"	0-6	2-1	2-4	0-8	5-1	16-3	6-6	9-6	7-9	18-1 5/8	7-4 5/8	6-3 1/8	0-4	10-6	13-6	6-2	18-6	5-5	7-6	6-4 3/8
96"	0-3	2-2	2-6	0-8	5-4	17-0	6-10	10-0	8-2	18-11 1/8	7-9 1/8	6-6 7/8	0-3	11-0	14-0	6-6	19-2	5-8	7-10	6-8 3/8
102"	0-1 1/2	2-2	2-8	0-9	5-7	17-9	7-2	10-6	8-8	19-8 3/4	8-1 3/4	6-10 7/8	0-2	11-7	14-9	6-10	20-2	6-0	8-2	7-0 3/8
108"	0-6	2-3	2-10	0-9	5-10	18-6	7-6	11-0	9-1	20-6 1/4	8-6 1/4	7-2 5/8	0-6	12-1	15-6	7-2	21-1	6-3	8-6	7-4 3/8
114"	0-3	2-3	3-0	0-10	6-1	19-3	7-11	11-6	9-6	21-3 7/8	8-11 7/8	7-7 5/8	0-4	12-9	16-0	7-6	21-10	6-8	8-11	7-9 3/8
120"	0-6	2-4	3-2	0-10	6-4	20-0	8-3	12-0	9-11	22-1 1/4	9-4 1/4	7-11 1/2	0-3	13-3	16-6	7-10	22-6	6-11	9-3	8-1 3/8
126"	0-4 1/2	2-6	3-2	0-11	6-7	21-0	8-7	12-6	10-3	23-2	9-9	8-3 1/2	0-3	13-10	17-3	8-2	23-6	7-3	9-9	8-10 1/8
132"	0-3	2-7	3-4	0-11	6-10	21-9	8-11	13-0	10-8	23-11 3/8	10-1 3/8	8-7 1/4	0-2	14-4	18-0	8-6	24-5	7-6	10-1	9-2 1/8
138"	0-6	2-7	3-6	1-0	7-1	22-9	9-4	13-6	11-1	25-0 1/8	10-7 1/8	9-0 1/4	0-2	15-0	18-6	8-10	25-2	7-11	10-6	9-7 1/8
144"	0-3	2-8	3-8	1-0	7-4	23-6	9-8	14-0	11-6	25-9 1/2	10-11 1/2	9-4	0-6	15-6	19-0	9-3	25-10	8-2	10-10	9-11 1/8

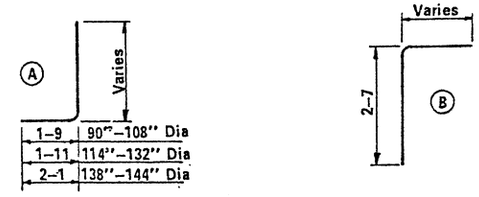

QUANTITIES

Pipe Dia.	Reinf. (lbs)	Conc. (CY)
90"	1395	27.51
96"	1655	29.95
102"	1920	32.67
108"	2090	35.47
114"	2460	38.38
120"	2700	41.24
126"	3155	47.41
132"	3580	50.91
138"	3880	54.69
144"	4315	58.23

NOTE:

Quantities and steel list shown are for one headwall.

Registered Professional Engineer — Certificate No. — Dec. 31, 19 — Arizona, U.S.A.

DESIGN APPROVED R.C. Brechler

APPROVED FOR DISTRIBUTION

STATE OF ARIZONA
DEPARTMENT OF TRANSPORTATION
DIVISION OF HIGHWAYS
STANDARD DRAWINGS

INLET AND OUTLET HEADWALLS
45° SKEW PIPE CULVERT
4:1 SLOPE

REVISION 7-76

STANDARD NO. PH-17

DRAWING NO. B-15.03

DESIGN KW 9-72 | DRAWN LAM 9-72 | CHECKED RLC 9-72

STEEL LIST

Mark	Bend	90" Dia			96" Dia.			102" Dia.			108" Dia.			114" Dia			120" Dia.			126" Dia			132" Dia.			138" Dia			144" Dia.		
		No	Size	Lgth	No	Size	Lgth	No	Size	Lgth	No	Size	Lgth	No	Size	Lgth	No	Size	Lgth	No	Size	Lgth	No	Size	Lgth	No	Size	Lgth	No	Size	Lgth
a1	A	5	#5	11-3	5	#6	11-9	5	#6	12-3	5	#6	12-6	5	#7	13-0	5	#7	13-6	5	#7	13-9	5	#8	14-3	6	#8	15-0	6	#8	15-6
a2	A	5	#6	11-6	5	#6	12-0	4	#6	12-6	5	#7	12-9	5	#7	13-6	5	#7	14-0	5	#8	14-3	5	#8	14-9	5	#8	15-6	6	#8	16-0
a3	A	5	#6	11-9	5	#6	12-3	4	#7	12-9	4	#7	13-0	5	#7	13-9	5	#8	14-3	5	#8	14-9	5	#8	15-0	5	#8	15-9	5	#8	16-3
a4	A	4	#6	12-3	5	#7	12-9	4	#7	13-0	4	#7	13-6	4	#8	14-0	4	#8	14-6	5	#8	15-0	5	#8	15-6	5	#8	16-0	5	#8	16-6
a5	A							4	#7	13-3	3	#7	13-9	3	#8	14-3	4	#8	14-9	4	#8	15-3	5	#8	15-9	5	#8	16-6	5	#8	17-0
a6	A																														
a7	A																			3	#4	7-3	14	#4	7-6	19	#4	7-9	26	#4	8-6
a8	A	4	#4	10-0	5	#4	10-6	5	#5	10-9	5	#5	11-0	5	#5	11-9	4	#6	12-0	5	#6	12-6	5	#7	12-9	5	#7	13-3	5	#7	13-9
a9	A	4	#5	10-6	4	#5	11-0	5	#5	11-6	5	#6	11-9	5	#6	12-6	4	#6	12-6	4	#7	13-0	4	#7	13-6	5	#7	14-0	5	#7	14-6
a10	A	4	#5	11-3	4	#6	11-9	4	#6	12-3	4	#7	12-9	5	#7	13-3	4	#7	13-3	4	#7	13-9	4	#7	14-3	4	#8	14-9	5	#8	15-3
a11	A	4	#6	12-0	4	#7	12-6	3	#7	13-0	4	#7	13-3	4	#7	14-0	4	#7	14-0	4	#8	14-6	4	#8	15-0	4	#8	15-6	4	#8	16-0
a12	A																4	#8	14-6	3	#8	15-0	4	#8	15-6	4	#8	16-3	4	#8	16-9
a13	A																									3	#4	8-0	7	#4	8-9
b1	str	2	#4	18-3	2	#4	19-0	2	#4	20-0	2	#4	20-9	2	#4	21-9	2	#4	22-6	2	#4	23-6	2	#4	24-6	2	#4	25-3	2	#4	26-3
b2	str	12	#4	18-0	12	#4	18-9	12	#4	19-9	14	#4	20-6	14	#4	21-6	14	#4	22-3	16	#4	23-3	16	#4	24-3	16	#4	25-0	16	#4	26-0
b3	str				2	#4	8-0	2	#4	15-3				2	#4	8-0	2	#4	14-6				2	#4	8-9	2	#4	14-9	2	#4	21-6
b4	str																														
b5	str																														
b6	str	2	#4	15-3	2	#4	16-0	2	#4	16-9	2	#4	17-6	2	#4	18-3	2	#4	19-0	2	#4	19-9	2	#4	20-6	2	#4	21-3	2	#4	22-0
b7	str	10	#4	15-0	10	#4	15-9	10	#4	16-6	12	#4	17-3	12	#4	18-0	12	#4	18-9	14	#4	19-6	14	#4	20-3	14	#4	21-0	14	#4	21-9
b8	str	2	#4	10-0	2	#4	13-0	2	#4	15-9	2	#4	9-9	2	#4	12-9	2	#4	16-0	2	#4	10-0	2	#4	12-9	2	#4	15-9	2	#4	19-0
b9	str				2	#4	3-9	2	#4	6-9				2	#4	4-0	2	#4	7-0				2	#4	3-6	2	#4	6-9	2	#4	9-9
b10	str																														
b11	str																														
c	str	5	#4	10-6	5	#4	11-0	5	#4	11-6	5	#4	12-0	5	#4	12-6	5	#4	13-0	5	#4	13-6	5	#4	14-0	5	#4	14-6	5	#4	15-0
d	A	6	#6	12-6	6	#6	13-0	6	#6	13-6	6	#7	14-0	6	#7	14-6	6	#7	15-0	6	#7	15-6	6	#7	16-0	6	#7	16-9	6	#7	17-3
e1	str	5	#4	3-3	5	#4	3-6	5	#4	3-9	6	#5	4-0	5	#5	4-3	5	#5	4-6	5	#6	4-6	5	#6	4-9	6	#6	5-0	6	#7	5-3
e2	str	5	#4	3-6	5	#4	3-9	4	#4	4-0	6	#5	4-3	5	#5	4-6	5	#5	4-9	5	#6	4-9	5	#6	5-0	5	#6	5-3	6	#7	5-6
e3	str	5	#4	3-9	5	#4	4-0	4	#5	4-0	5	#5	4-6	5	#5	4-9	5	#6	4-9	5	#6	5-0	5	#6	5-3	5	#7	5-6	5	#7	5-9
e4	str	4	#4	4-0	5	#5	4-3	4	#5	4-3	5	#5	4-9	4	#6	4-9	4	#6	5-0	5	#6	5-3	5	#7	5-6	5	#7	5-9	5	#7	6-0
e5	str							4	#5	4-6				4	#6	5-0	4	#6	5-3	4	#7	5-6	5	#7	5-9	5	#7	6-0	5	#8	6-3
e6	str																														
e7	str	2	#4	4-0	2	#5	4-3	2	#5	4-6	2	#5	4-9	2	#6	5-0	2	#6	5-3	2	#7	5-6	2	#7	5-9	2	#7	6-0	2	#8	6-3
e8	str	14	#4	4-0	14	#5	4-3	15	#5	4-6	15	#5	4-9	16	#6	5-0	16	#6	5-3	17	#7	5-6	17	#7	5-9	18	#7	6-0	19	#8	6-3
e9	str	3	#4	4-0	3	#5	4-3	3	#5	4-6	3	#5	4-9	4	#6	5-0	4	#6	5-3	4	#7	5-6	4	#7	5-9	4	#7	6-0	4	#8	6-3
e10	str	4	#4	4-0	4	#5	4-3	4	#5	4-6	4	#5	4-9	4	#6	5-0	4	#6	5-3	4	#6	5-6	4	#7	5-9	4	#7	6-0	4	#8	6-3
e11	str	4	#4	3-9	4	#5	4-0	4	#5	4-3	4	#5	4-6	5	#5	4-9	4	#6	5-0	4	#6	5-3	4	#6	5-6	4	#7	5-9	4	#7	6-0
e12	str	4	#4	3-6	4	#4	3-9	5	#4	4-0	5	#4	4-3	5	#5	4-6	4	#5	5-0	4	#6	5-0	4	#6	5-3	4	#6	5-6	5	#7	5-9
e13	str	4	#4	3-3	5	#4	3-6	5	#4	3-9	5	#4	4-0	5	#4	4-3	4	#5	4-9	4	#5	4-9	4	#5	5-0	5	#6	5-3	5	#6	5-6
e14	str																4	#5	4-6	5	#5	4-6	5	#5	4-9	5	#6	5-0	5	#6	5-3
f1	str	5	#4	9-6	5	#4	9-9	5	#4	10-3	5	#4	10-6	5	#4	11-0	4	#4	11-6	4	#4	12-0	5	#4	12-6	5	#4	12-9	5	#4	13-3
f2	str	4	#4	9-9	4	#4	10-3	5	#4	10-9	5	#4	11-3	5	#4	11-9	4	#4	12-0	4	#4	12-6	4	#4	13-0	5	#4	13-3	5	#4	13-9
f3	str	4	#4	10-3	4	#4	10-9	4	#4	11-3	5	#4	11-9	5	#4	12-3	4	#4	12-3	4	#4	12-9	4	#4	13-3	4	#4	13-9	4	#4	14-3
f4	str																4	#4	12-9	4	#4	13-3	4	#4	13-9	4	#4	14-3	4	#4	14-9
f5	str	4	#4	8-3	4	#4	8-6	4	#4	9-0	4	#4	9-3	4	#4	9-9	4	#4	10-3	4	#4	10-6	4	#4	10-9	4	#4	11-3	4	#4	11-9
f6	str	4	#4	9-3	4	#4	9-6	4	#4	9-9	4	#4	10-3	3	#4	10-6	3	#4	11-0	4	#4	11-6	4	#4	11-9	4	#4	12-3	4	#4	12-6
f7	str	3	#4	10-3	3	#4	10-6	4	#4	10-9	4	#4	11-3	3	#4	11-3	3	#4	12-0	3	#4	12-6	3	#4	12-9	4	#4	13-3	4	#4	13-6
f8	str													3	#4	12-3	3	#4	12-6	3	#4	13-3	3	#4	13-6	3	#4	14-3	3	#4	14-6
m1	str	3	#4	19-9	3	#4	20-6	3	#4	21-6	3	#4	22-3	3	#4	23-3	3	#4	24-3	3	#4	25-3	4	#4	26-3	4	#4	27-0	4	#4	28-0
m2	str	1	#4	19-9	1	#4	20-6	1	#4	21-6	1	#4	22-3	1	#4	23-3	1	#4	24-3	1	#4	25-3	1	#4	26-3	1	#4	27-0	1	#4	28-0
m3	str	3	#4	19-6	3	#4	20-6	3	#4	21-6	3	#4	22-6	3	#4	23-3	3	#4	24-3	3	#4	25-3	4	#4	26-3	4	#4	27-3	4	#4	28-0
m4	str	1	#4	19-6	1	#4	20-6	1	#4	21-6	1	#4	22-6	1	#4	23-3	1	#4	24-3	1	#4	25-3	1	#4	26-3	1	#4	27-3	1	#4	28-0
n1	str	3	#4	17-0	3	#4	17-9	3	#4	18-9	3	#4	19-6	3	#4	20-6	3	#4	21-6	3	#4	22-3	4	#4	23-3	4	#4	24-3	4	#4	25-0
n2	str	1	#4	17-0	1	#4	17-9	1	#4	18-9	1	#4	19-6	1	#4	20-6	1	#4	21-6	1	#4	22-3	1	#4	23-3	1	#4	24-3	1	#4	25-0
p	str	4	#5	13-0	4	#5	13-9	4	#5	14-3	4	#5	15-0	4	#5	15-9	4	#5	16-6	4	#5	17-3	4	#5	17-9	4	#5	18-9	4	#5	19-3
q	str	2	#6	15-0	2	#6	15-9	2	#6	16-3	2	#6	17-0	2	#6	17-9	2	#6	18-6	2	#6	19-3	2	#6	19-9	2	#6	20-9	2	#6	21-3
g	str	2	#4	12-0	2	#4	12-9	2	#4	13-6	2	#4	14-3	2	#4	14-9	2	#4	15-6	2	#4	16-0	2	#4	16-9	2	#4	17-3	2	#4	18-0
u	B	9	#4	4-6	9	#4	4-6	10	#4	4-6	10	#4	4-9	10	#4	4-9	11	#4	4-9	11	#4	4-9	12	#4	5-0	12	#4	5-0	13	#4	5-0
v	str	1	#4	19-0	1	#4	19-9	1	#4	20-6	1	#4	21-6	1	#4	22-3	1	#4	23-3	1	#4	24-0	1	#4	25-0	1	#4	25-9	1	#4	26-9
w	str	1	#4	15-0	1	#4	15-9	1	#4	16-6	1	#4	17-3	1	#4	17-9	1	#4	18-6	1	#4	19-3	1	#4	20-0	1	#4	20-9	1	#4	21-3

Pipe Dia.	DIMENSIONS																			
	A	B	C	D	E	F	G	H	J	K	L	M	N	P	R	S	T	V	W	X
90"	0-3	2-2	2-6	0-5	5-1	18-0	6-6	9-6	8-3	19-10 1/2	7-4 1/2	6-2 7/8	0-3	10-5	15-0	7-0	19-11	5-4	7-6	6-4 3/8
96"	0-1 1/2	2-2	2-9	0-5	5-4	18-9	6-10	10-0	8-8	20-8 1/8	7-9 1/8	6-6 7/8	0-2	11-0	15-9	7-5	20-11	5-8	7-10	6-8 3/8
102"	0-6	2-2	2-11	0-6	5-7	19-9	7-2	10-6	9-2	21-8 3/4	8-1 3/4	6-10 7/8	0-2	11-7	16-6	7-9	21-11	6-0	8-2	7-0 3/8
108"	0-4 1/2	2-3	3-0	0-7	5-10	20-6	7-6	11-0	9-6	22-6 1/4	8-6 1/4	7-2 5/8	0-6	12-1	17-3	8-1	22-10	6-3	8-6	7-4 3/8
114"	0-3	2-4	3-2	0-7	6-1	21-6	7-11	11-6	10-0	23-6 5/8	8-11 5/8	7-7 1/2	0-6	12-8	18-0	8-6	23-9	6-7	8-11	7-9 3/8
120"	0-1 1/2	2-4	3-5	0-7	6-4	22-3	8-3	12-0	10-5	24-4 1/4	9-4 1/4	7-11 1/2	0-4	13-3	18-9	8-11	24-9	6-11	9-3	8-1 3/8
126"	0-6	2-7	3-4	0-8	6-7	23-3	8-7	12-6	10-10	25-4 3/4	9-8 3/4	8-3 1/4	0-4	13-9	19-6	9-3	25-8	7-2	9-9	8-10 1/8
132"	0-4 1/2	2-7	3-7	0-8	6-10	24-3	8-11	13-0	11-4	26-5 3/8	10-1 3/8	8-7 1/4	0-4	14-4	20-3	9-7	26-8	7-6	10-1	9-2 1/8
138"	0-3	2-8	3-9	0-8	7-1	25-0	9-4	13-6	11-9	27-2 7/8	10-6 7/8	9-0	0-3	14-11	21-0	10-0	27-7	7-10	10-6	9-7 1/8
144"	0-1 1/2	2-8	4-0	0-8	7-4	26-0	9-8	14-0	12-2	28-3 1/4	10-11 1/4	9-3 3/4	0-3	15-5	21-9	10-5	28-6	8-1	10-10	9-11 1/8

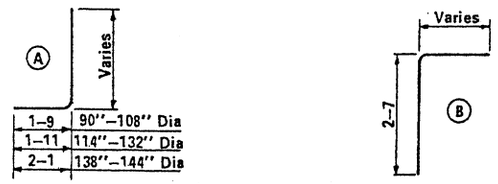

QUANTITIES

Pipe Dia.	Reinf. (lbs)	Conc. (CY)
90"	1560	29.98
96"	1840	32.78
102"	2050	35.80
108"	2325	38.64
114"	2720	42.08
120"	3075	45.38
126"	3490	52.07
132"	3960	56.09
138"	4370	60.09
144"	4910	64.31

NOTE:

Quantities and steel list shown are for one headwall.

Registered Professional Engineer (Civil) CERTIFICATE EXPIRES DEC. 31, 19 ARIZONA, U.S.A.

DESIGN APPROVED	STATE OF ARIZONA DEPARTMENT OF TRANSPORTATION DIVISION OF HIGHWAYS STANDARD DRAWINGS	REVISION 7-76	
APPROVED FOR DISTRIBUTION	INLET AND OUTLET HEADWALLS 45° SKEW PIPE CULVERT 6:1 SLOPE	STANDARD NO. PH-18	DRAWING NO. B-15.04

DESIGN	K W	9-72	DRAWN	LAM	9-72	CHECKED	RLC	9-72

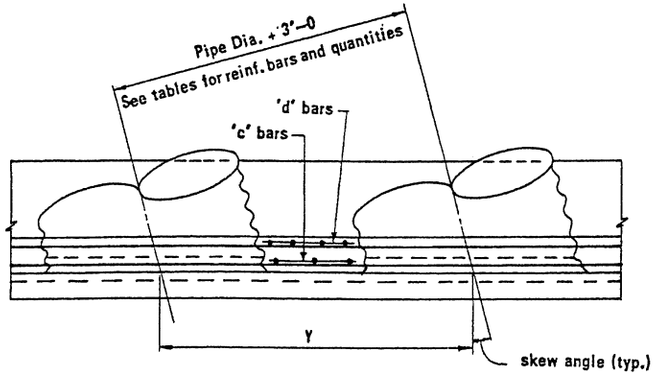

PLAN – INLET OR OUTLET END WITHOUT APRON

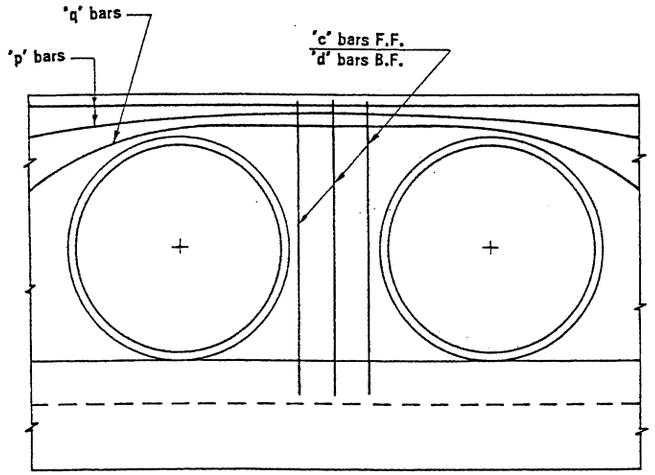

ELEVATION WITHOUT APRON

Note: Outlet end with apron similar.

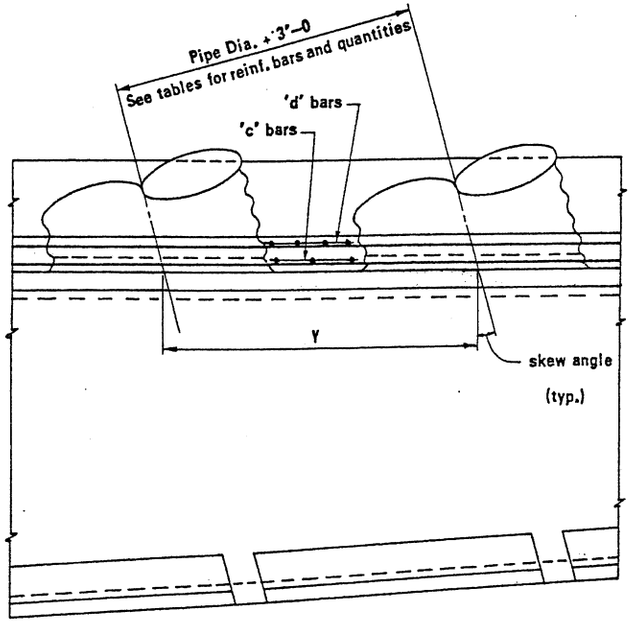

PLAN – OUTLET END WITH APRON

DIMENSION Y (FT)

SKEW	PIPE DIA (INCHES)									
	90"	96"	102"	108"	114"	120"	126"	132"	138"	144"
Rt ∢	10-6	11-0	11-6	12-0	12-6	13-0	13-6	14-0	14-6	15-0
15°	10-10 1/2	11-4 5/8	11-10 7/8	12-5 1/8	12-11 3/8	13-5 1/2	13-11 3/4	14-6	15-0 1/4	15-6 3/8
30°	12-1 1/2	12-8 3/8	13-3 1/4	13-10 1/4	14-5 1/8	15-0 1/8	15-7	16-1 7/8	16-8 7/8	17-3 7/8
45°	14-10 1/4	15-6 5/8	16-3 1/8	16-11 5/8	17-8	18-4 1/2	19-1 1/8	19-9 5/8	20-6	21-2 1/2

NO. OF ADDITIONAL BARS REQD. PER ADDITIONAL PIPE**

SKEW	MARK	PIPE DIA. (inches)									
		90"	96"	102"	108"	114"	120"	126"	132"	138"	144"
Rt ∢	c	3	3	3	3	3	3	3	3	3	3
	d	4	4	4	4	4	4	5	5	5	5
	e8, r1, s	10	10	11	11	12	12	13	13	14	14
	h, u	6	7	7	7	8	8	8	9	9	10
15°	c	3	3	3	3	3	3	3	3	3	3
	d	4	4	4	4	5	5	6	6	6	6
	e8, r1, s	10	11	11	12	12	13	13	14	14	15
	h, u	7	7	7	8	8	8	9	9	10	10
30°	c	3	3	3	3	3	3	3	3	3	3
	d	4	4	4	4	5	5	7	7	7	7
	e8, r1, s	11	12	13	13	14	14	15	15	16	17
	h, u	8	8	8	9	9	10	10	10	11	11
45°	c	4	4	4	4	4	4	4	4	4	4
	d	5	5	5	5	6	6	9	9	9	9
	e8, r1, s	14	15	16	16	17	18	18	19	20	20
	h, u	10	10	10	11	11	12	12	13	13	14

**For inlet and outlet without apron omit bars "r1," "s" and "h."
For outlet with apron omit "u" bar.

CONC. QUANTITIES PER ADDITIONAL PIPE (C.Y.) OUTLET END WITH APRON

Pipe Dia.	Rt ∢			15°			30°			45°		
	2:1	4:1	6:1	2:1	4:1	6:1	2:1	4:1	6:1	2:1	4:1	6:1
90"	8.69	8.96	9.20	8.75	9.32	9.69	9.66	10.31	10.71	11.63	12.47	12.81
96"	9.41	9.71	9.99	9.50	10.11	10.53	10.49	11.19	11.63	12.62	13.50	13.90
102"	10.21	10.55	10.83	10.26	10.93	11.40	11.32	12.08	12.57	13.64	14.58	15.04
108"	11.03	11.36	11.67	11.05	11.78	12.30	12.21	13.00	13.55	14.71	15.69	16.23
114"	11.90	12.25	12.56	11.89	12.67	13.24	13.05	13.90	14.52	15.80	16.83	17.43
120"	12.79	13.15	13.46	12.73	13.57	14.20	14.07	14.98	15.64	16.95	18.04	18.71
126"	13.67	14.08	14.44	13.61	14.51	15.20	15.04	16.00	16.72	18.12	19.26	20.01
132"	14.55	15.00	15.44	14.53	15.49	16.24	16.04	17.06	17.84	19.36	20.54	21.38
138"	15.47	16.00	16.41	15.47	16.49	17.31	17.09	18.17	19.01	20.60	21.83	22.76
144"	16.42	16.99	17.46	16.42	17.51	18.40	18.17	19.30	20.21	21.89	23.18	24.19

BAR LENGTH ADJUSTMENT PER ADDITIONAL PIPE (FT.)

SKEW	MARK*	PIPE DIA (inches)									
		90"	96"	102"	108"	114"	120"	126"	132"	138"	144"
Rt ∢	j, n, p q, v and t1 to t7	10-6	11-0	11-6	12-0	12-6	13-0	13-6	14-0	14-6	15-0
15°	g,j,n1,n2,p,q and t1 to t11	10-9	11-3	12-0	12-6	13-0	13-6	14-0	14-6	15-0	15-6
30°	g,j,n1,n2,p,q and t1 to t10	12-0	12-9	13-3	13-9	14-6	15-0	15-6	16-3	16-9	17-3
45°	g,j,n1,n2,p,q and t1 to t10	14-9	15-6	16-3	17-0	17-9	18-3	19-0	19-9	20-6	21-3

*Increase bar lengths for single pipes by dimensions in table for each additional pipe.

INLET OR OUTLET QUANTITIES PER ADDITIONAL PIPE WITHOUT APRON

Pipe Dia.	Conc. (CY)				Reinforcing (lbs)														
	Rt ∢	15°	30°	45°	Rt ∢ Inlet			Rt ∢ Outlet			15°			30°			45°		
					2:1	4:1	6:1	2:1	4:1	6:1	2:1	4:1	6:1	2:1	4:1	6:1	2:1	4:1	6:1
90"	6.02	6.23	6.95	8.51	280	270	265	260	265	265	280	265	265	280	280	280	350	350	350
96"	6.52	6.76	7.54	9.22	320	335	325	320	330	300	320	300	300	320	320	320	400	395	395
102"	7.05	7.30	8.13	9.96	335	345	345	335	340	340	365	340	340	370	365	370	460	455	420
108"	7.58	7.89	8.75	10.73	420	395	355	370	390	355	430	365	365	385	380	385	480	475	480
114"	8.15	8.44	9.34	11.51	450	455	440	445	445	445	485	435	445	485	465	485	590	570	575
120"	8.72	9.03	10.07	12.34	465	470	460	500	460	460	515	460	470	500	485	500	620	600	605
126"	9.32	9.65	10.75	13.18	580	580	565	575	575	565	620	550	525	640	620	640	795	770	775
132"	9.93	10.30	11.46	14.05	595	605	585	595	595	590	660	590	600	665	655	665	840	825	830
138"	10.57	10.95	12.20	14.94	685	635	620	675	630	620	680	610	620	705	690	705	885	870	880
144"	11.22	11.62	12.95	15.86	720	715	700	700	710	700	715	705	715	810	795	810	1000	980	990

REINF. BAR QUANTITIES PER ADDITIONAL PIPE (lbs) OUTLET END WITH APRON

Pipe Dia.	Rt ∢			15°			30°			45°		
	2:1	4:1	6:1	2:1	4:1	6:1	2:1	4:1	6:1	2:1	4:1	6:1
90"	430	445	460	440	465	495	450	495	525	550	620	640
96"	500	510	505	495	515	545	505	565	590	615	690	705
102"	540	560	575	550	580	615	570	630	665	685	770	765
108"	595	630	615	640	630	665	605	665	705	730	820	855
114"	680	705	730	705	710	760	720	770	835	840	945	975
120"	755	735	775	760	765	820	760	805	855	920	990	1040
126"	855	875	910	870	875	895	915	965	1040	1095	1170	1225
132"	905	920	955	935	940	1000	955	1020	1085	1185	1280	1335
138"	1005	990	1020	965	970	1040	1015	1080	1155	1145	1355	1410
144"	1040	1085	1120	1030	1030	1170	1140	1210	1275	1380	1480	1550

NOTES: Multipipe culvert headwall quantities are obtained by multiplying quantity shown in tables by the number of additional pipes and adding to single pipe headwall quantity.
Number of bars and quantities shown in tables are for one headwall.

REGISTERED PROFESSIONAL ENGINEER CERTIFICATE R. C. BRECHLER DEC. 31, 19 ARIZONA, U.S.A.

DESIGN APPROVED R. C. Brechler

APPROVED FOR DISTRIBUTION

STATE OF ARIZONA
DEPARTMENT OF TRANSPORTATION
DIVISION OF HIGHWAYS
STANDARD DRAWINGS

MULTIPIPE HEADWALLS

REVISION

STANDARD NO. PH-19

DRAWING NO. B-16.01

DESIGN	K W	9-72	DRAWN	L A M	9-72	CHECKED	R L C	9-72

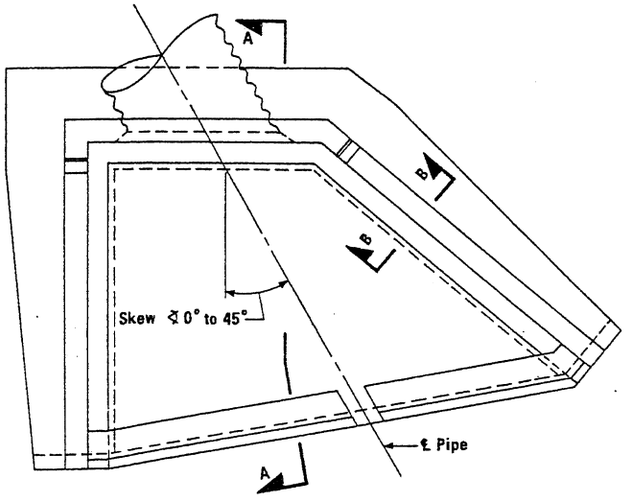

TYPICAL PLAN – HEADWALL WITH APRON

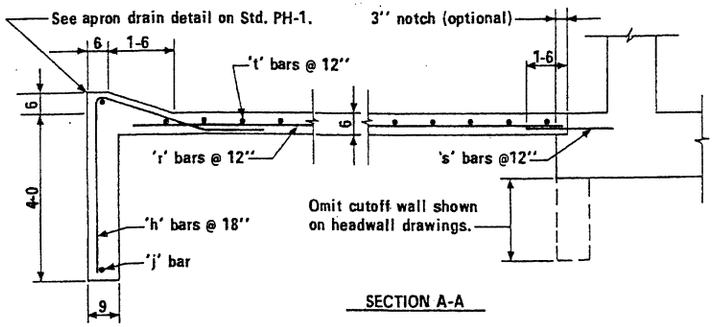

SECTION A-A

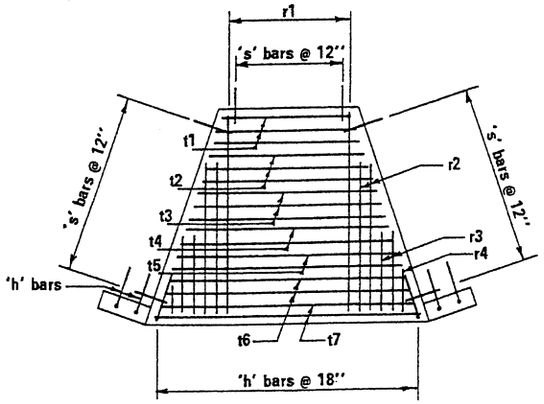

RIGHT ANGLE

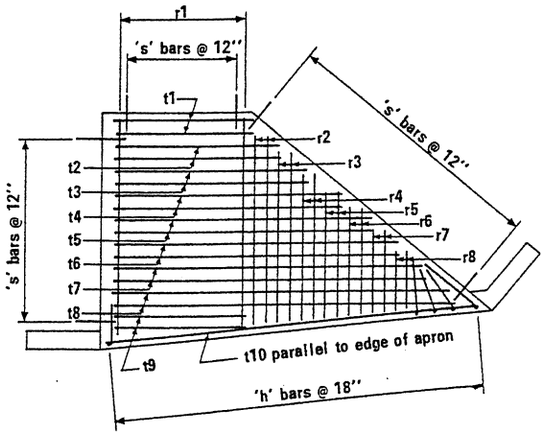

30° SKEW

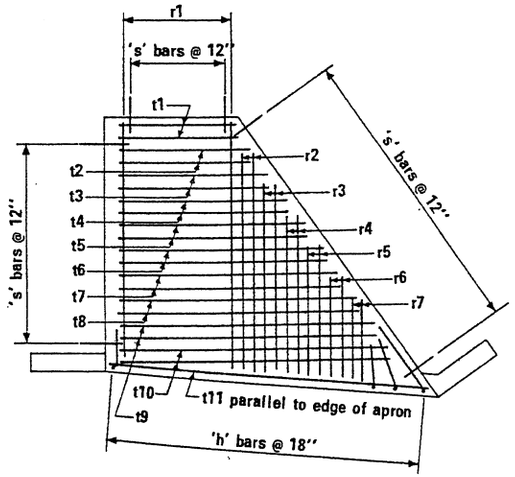

15° SKEW

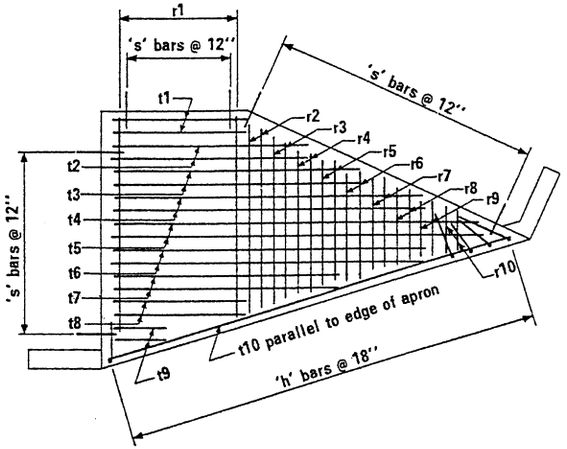

45° SKEW

REINFORCING STEEL LAYOUT

OUTLET APRON QUANTITIES*

SKEW	RT ∢						15°						30°						45°					
SLOPE	2:1		4:1		6:1		2:1		4:1		6:1		2:1		4:1		6:1		2:1		4:1		6:1	
PIPE DIA.	REINF. (lbs)	CONC. (CY)	REINF. (lbs)	CONC. (CY)	REINF. (lbs)	CONC. (CY)	REINF. (lbs)	CONC. (CY)	REINF. (lbs)	CONC. (CY)	REINF. (lbs)	CONC. (CY)	REINF. (lbs)	CONC. (CY)	REINF. (lbs)	CONC. (CY)	REINF. (lbs)	CONC. (CY)	REINF. (lbs)	CONC. (CY)	REINF. (lbs)	CONC. (CY)	REINF. (lbs)	CONC. (CY)
90''	190	3.70	235	4.38	265	4.88	205	3.38	250	4.21	325	4.91	245	4.17	305	5.28	400	6.36	275	5.42	380	6.54	430	7.31
96''	215	3.96	255	4.66	285	5.27	215	3.64	280	4.52	350	5.33	255	4.52	335	5.70	440	6.82	285	5.81	395	7.00	475	7.91
102''	240	4.35	270	5.07	315	5.71	235	3.95	305	4.93	385	5.83	280	4.92	365	6.22	465	7.34	305	6.28	430	7.57	515	8.58
108''	265	4.73	300	5.48	345	6.14	250	4.23	330	5.36	420	6.29	315	5.32	400	6.72	495	7.93	335	6.68	475	8.12	555	9.15
114''	290	5.15	340	5.95	370	6.61	270	4.58	355	5.71	440	6.78	330	5.75	425	7.15	545	8.50	360	7.21	500	8.70	595	9.88
120''	310	5.56	350	6.38	410	7.09	295	4.88	385	6.08	495	7.33	365	6.18	455	7.52	580	8.99	400	7.67	535	9.22	650	10.57
126''	330	5.85	385	6.79	425	7.50	315	5.23	415	6.56	530	7.88	390	6.63	485	8.18	620	9.60	425	8.18	565	9.94	690	11.28
132''	360	6.23	400	7.19	450	8.03	340	5.56	440	6.99	570	8.43	425	7.09	520	8.69	665	10.17	465	8.69	615	10.56	735	12.08
138''	380	6.59	430	7.68	500	8.56	355	5.96	470	7.44	605	9.03	455	7.56	555	9.20	680	10.87	485	9.29	660	11.30	775	12.83
144''	405	6.92	460	8.04	530	9.08	395	6.36	495	7.93	655	9.70	470	7.99	570	9.59	720	11.54	530	9.81	695	11.88	825	13.62

*The apron quantities take into consideration the cutoff walls being omitted along outlet headwall.

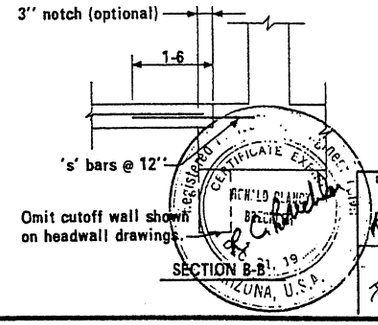

SECTION B-B

NOTES:

For General Notes and Misc. Details see Std. PH-1.

For steel list and bend diagrams see Std. PH-21, PH-22 and PH-23.

DESIGN APPROVED R. C. Buchler	STATE OF ARIZONA DEPARTMENT OF TRANSPORTATION DIVISION OF HIGHWAYS STANDARD DRAWINGS	REVISION	
APPROVED FOR DISTRIBUTION	OUTLET APRONS	STANDARD NO. PH-20	DRAWING NO. B-17.01

DESIGN K W 9-72 | DRAWN LAM 9-72 | CHECKED RLC 9-72

RIGHT ANGLE

Mark	Bend	90" Dia			96" Dia			102" Dia			108" Dia			114" Dia			120" Dia			126" Dia			132" Dia			138" Dia			144" Dia		
		No	Size	Lgth	No	Size	Lgth	No	Size	Lgth	No	Size	Lgth	No	Size	Lgth	No	Size	Lgth	No	Size	Lgth	No	Size	Lgth	No	Size	Lgth	No	Size	Lgth
h	C	12	#4	7-3	15	#4	7-3	15	#4	7-3	16	#4	7-3	17	#4	7-3	17	#4	7-3	18	#4	7-3	19	#4	7-3	20	#4	7-3	20	#4	7-3
j	str.	1	#4	21-9	1	#4	22-6	1	#4	24-0	1	#4	25-3	1	#4	26-3	1	#4	27-6	1	#4	28-6	1	#4	29-9	1	#4	30-6	1	#4	31-6
r1	str.	9	#4	10-6	9	#4	11-0	10	#4	11-6	10	#4	12-3	11	#4	12-9	11	#4	13-6	12	#4	14-0	12	#4	14-6	13	#4	15-0	13	#4	15-3
r2	str	4	#4	5-6	4	#4	6-6	4	#4	7-0	4	#4	7-9	4	#4	8-0	4	#4	8-9	4	#4	8-9	4	#4	9-6	4	#4	9-6	4	#4	10-0
r3	str	2	#4	2-9	2	#4	3-6	2	#4	3-6	2	#4	5-0	2	#4	5-0	4	#4	3-6	4	#4	3-0	4	#4	4-0	4	#4	3-6	4	#4	4-6
r4	str																														
s	str	31	#4	2-0	32	#4	2-0	33	#4	2-0	33	#4	2-6	36	#4	2-6	38	#4	2-6	40	#4	2-6	40	#4	3-0	41	#4	3-0	43	#4	3-0
t1	str	3	#4	8-3	3	#4	9-0	3	#4	9-6	3	#4	9-9	3	#4	10-3	3	#4	10-6	3	#4	11-0	3	#4	11-6	3	#4	12-3	3	#4	12-6
t2	str	3	#4	10-6	3	#4	11-0	3	#4	11-6	3	#4	11-9	3	#4	12-3	3	#4	12-6	3	#4	13-6	3	#4	13-9	3	#4	14-0	3	#4	14-6
t3	str	3	#4	13-0	3	#4	13-3	3	#4	14-0	3	#4	14-3	3	#4	14-6	3	#4	14-9	3	#4	15-9	3	#4	16-0	3	#4	16-3	3	#4	16-9
t4	str	2	#4	15-0	2	#4	15-6	3	#4	16-0	2	#4	16-6	2	#4	17-0	3	#4	17-3	3	#4	18-0	3	#4	18-0	3	#4	18-6	3	#4	19-0
t5	str										2	#4	18-0	2	#4	18-6	2	#4	19-6	2	#4	20-0	3	#4	20-0	3	#4	21-0	2	#4	21-0
t6	str																												2	#4	22-6
t7	str																														

30° SKEW

Mark	Bend	90" Dia			96" Dia			102" Dia			108" Dia			114" Dia			120" Dia			126" Dia			132" Dia			138" Dia			144" Dia		
		No	Size	Lgth	No	Size	Lgth	No	Size	Lgth	No	Size	Lgth	No	Size	Lgth	No	Size	Lgth	No	Size	Lgth	No	Size	Lgth	No	Size	Lgth	No	Size	Lgth
h	C	14	#4	7-3	15	#4	7-3	16	#4	7-3	17	#4	7-3	17	#4	7-3	18	#4	7-3	19	#4	7-3	20	#4	7-3	21	#4	7-3	22	#4	7-3
j	str	1	#4	25-6	1	#4	27-0	1	#4	28-6	1	#4	30-0	1	#4	31-0	1	#4	33-0	1	#4	34-6	1	#4	36-0	1	#4	37-6	1	#4	39-0
r1	str	10	#4	8-0	10	#4	7-9	10	#4	8-3	11	#4	8-9	12	#4	9-3	12	#4	9-9	13	#4	10-3	13	#4	10-6	14	#4	11-0	14	#4	11-6
r2	str	2	#4	6-9	2	#4	6-9	2	#4	7-9	2	#4	7-6	2	#4	8-0	2	#4	8-9	2	#4	9-3	2	#4	9-9	2	#4	10-0	2	#4	10-6
r3	str	2	#4	5-3	2	#4	5-0	2	#4	6-3	2	#4	6-0	2	#4	6-6	2	#4	7-0	2	#4	7-6	2	#4	8-0	2	#4	8-6	2	#4	9-0
r4	str	2	#4	3-9	2	#4	3-6	2	#4	4-6	2	#4	4-3	2	#4	4-6	2	#4	5-6	2	#4	5-9	2	#4	6-6	2	#4	7-0	2	#4	7-6
r5	str							2	#4	3-6	1	#4	3-6	1	#4	3-9	2	#4	3-9	2	#4	4-6	2	#4	5-0	2	#4	5-6	2	#4	6-0
r6	str																						2	#4	4-0	3	#4	3-0	3	#4	4-3
r7	str																														
r8	str																														
s	str	30	#4	3-0	30	#4	3-0	32	#4	3-0	34	#4	3-0	35	#4	3-0	37	#4	3-0	38	#4	3-0	41	#4	3-0	42	#4	3-0	44	#4	3-0
t1	str	2	#4	9-6	2	#4	10-3	2	#4	11-0	2	#4	11-6	2	#4	12-0	2	#4	12-0	2	#4	13-0	2	#4	13-6	2	#4	14-0	2	#4	14-9
t2	str	2	#4	12-0	2	#4	12-6	2	#4	13-3	2	#4	13-9	2	#4	14-0	2	#4	14-6	2	#4	15-6	2	#4	15-9	2	#4	16-3	2	#4	17-3
t3	str	2	#4	14-6	2	#4	15-0	2	#4	15-9	2	#4	16-3	2	#4	16-6	2	#4	17-0	2	#4	17-9	2	#4	18-0	2	#4	18-9	2	#4	19-6
t4	str	2	#4	17-0	2	#4	17-3	2	#4	18-0	2	#4	18-6	2	#4	18-9	2	#4	19-3	2	#4	20-0	2	#4	20-6	2	#4	21-0	2	#4	21-9
t5	str				1	#4	19-6	1	#4	20-0	2	#4	20-9	2	#4	21-0	2	#4	21-6	2	#4	22-6	2	#4	23-0	2	#4	23-3	2	#4	24-3
t6	str																1	#4	24-0	1	#4	25-0	2	#4	25-0	2	#4	25-9	2	#4	26-6
t7	str																														
t8	str																														
t9	str																														
t10	str	1	#4	19-3	1	#4	20-3	1	#4	21-6	1	#4	22-9	1	#4	24-0	1	#4	25-0	1	#4	26-3	1	#4	27-6	1	#4	28-6	1	#4	29-6

15° SKEW

Mark	Bend	90" Dia			96" Dia			102" Dia			108" Dia			114" Dia			120" Dia			126" Dia			132" Dia			138" Dia			144" Dia		
		No	Size	Lgth	No	Size	Lgth	No	Size	Lgth	No	Size	Lgth	No	Size	Lgth	No	Size	Lgth	No	Size	Lgth	No	Size	Lgth	No	Size	Lgth	No	Size	Lgth
h	C	12	#4	7-3	12	#4	7-3	13	#4	7-3	13	#4	7-3	14	#4	7-3	14	#4	7-3	15	#4	7-3	16	#4	7-3	16	#4	7-3	17	#4	7-3
j	str	1	#4	21-0	1	#4	22-0	1	#4	23-3	1	#4	24-3	1	#4	25-6	1	#4	26-6	1	#4	27-6	1	#4	28-6	1	#4	29-9	1	#4	31-0
r1	str	9	#4	8-3	9	#4	8-6	10	#4	9-3	10	#4	9-6	11	#4	10-3	11	#4	10-9	12	#4	11-3	12	#4	11-6	12	#4	12-0	12	#4	12-6
r2	str	2	#4	6-0	2	#4	7-0	2	#4	7-0	2	#4	7-9	2	#4	7-9	2	#4	8-9	2	#4	8-6	2	#4	9-0	2	#4	10-3	2	#4	11-3
r3	str	1	#4	4-6	2	#4	4-6	2	#4	4-3	2	#4	5-3	2	#4	5-0	2	#4	6-0	2	#4	6-0	2	#4	6-6	2	#4	7-6	2	#4	8-9
r4	str																1	#4	4-9	1	#4	5-0	1	#4	5-0	2	#4	5-0	2	#4	6-0
r5	str																														
r6	str																														
r7	str																														
s	str	26	#4	3-0	26	#4	3-0	28	#4	3-0	29	#4	3-0	31	#4	3-0	33	#4	3-0	33	#4	3-0	34	#4	3-0	36	#4	3-0	38	#4	3-0
t1	str	2	#4	8-6	2	#4	9-0	2	#4	9-3	2	#4	9-9	2	#4	10-3	2	#4	10-6	2	#4	11-0	2	#4	11-6	2	#4	12-0	2	#4	12-6
t2	str	2	#4	10-3	2	#4	10-6	2	#4	11-0	2	#4	11-3	2	#4	11-9	2	#4	12-0	2	#4	12-6	2	#4	12-9	2	#4	13-3	2	#4	13-9
t3	str	2	#4	11-3	2	#4	12-0	2	#4	12-3	2	#4	12-9	2	#4	13-0	2	#4	13-6	2	#4	14-0	2	#4	14-6	2	#4	15-0	2	#4	15-3
t4	str	2	#4	12-6	2	#4	13-0	2	#4	13-6	2	#4	14-0	2	#4	14-6	2	#4	14-9	2	#4	15-3	2	#4	15-9	2	#4	16-3	2	#4	17-0
t5	str	1	#4	14-0	1	#4	14-6	1	#4	15-0	2	#4	15-6	2	#4	16-0	2	#4	16-0	2	#4	16-9	2	#4	17-0	2	#4	17-6	2	#4	18-3
t6	str																1	#4	17-6	1	#4	18-0	2	#4	18-6	2	#4	19-0	2	#4	19-6
t7	str																												1	#4	21-0
t8	str																														
t9	str																														
t10	str																														
t11	str	1	#4	15-0	1	#4	15-6	1	#4	16-6	1	#4	17-6	1	#4	18-3	1	#4	19-0	1	#4	20-0	1	#4	20-6	1	#4	21-6	1	#4	22-6

45° SKEW

Mark	Bend	90" Dia			96" Dia			102" Dia			108" Dia			114" Dia			120" Dia			126" Dia			132" Dia			138" Dia			144" Dia		
		No	Size	Lgth	No	Size	Lgth	No	Size	Lgth	No	Size	Lgth	No	Size	Lgth	No	Size	Lgth	No	Size	Lgth	No	Size	Lgth	No	Size	Lgth	No	Size	Lgth
h	c	18	#4	7-3	19	#4	7-3	20	#4	7-3	21	#4	7-3	22	#4	7-3	23	#4	7-3	24	#4	7-3	25	#4	7-3	26	#4	7-3	27	#4	7-3
j	str	1	#4	33-3	1	#4	34-9	1	#4	36-6	1	#4	38-0	1	#4	39-9	1	#4	41-6	1	#4	43-3	1	#4	44-9	1	#4	46-6	1	#4	48-3
r1	str	12	#4	6-9	13	#4	7-0	13	#4	7-6	14	#4	7-9	15	#4	8-0	15	#4	8-9	16	#4	9-3	17	#4	9-9	17	#4	10-3	18	#4	11-0
r2	str	3	#4	5-0	3	#4	5-3	3	#4	5-9	3	#4	6-0	3	#4	6-3	3	#4	7-3	3	#4	7-6	3	#4	8-0	3	#4	8-6	3	#4	8-6
r3	str	3	#4	4-0	3	#4	3-9	2	#4	4-0	2	#4	4-3	3	#4	4-9	3	#4	5-6	3	#4	6-0	3	#4	6-0	3	#4	6-6	3	#4	6-9
r4	str							2	#4	3-0	2	#4	3-3	2	#4	3-6	3	#4	4-0	3	#4	4-3	3	#4	5-0	3	#4	4-9	3	#4	5-3
r5	str																									2	#4	4-0	3	#4	4-0
r6	str																														
r7	str																														
r8	str																														
r9	str																														
r10	str																														
s	str	32	#4	3-0	33	#4	3-0	34	#4	3-0	37	#4	3-0	39	#4	3-0	41	#4	3-0	43	#4	3-0	46	#4	3-0	46	#4	3-0	49	#4	3-0
t1	str	3	#4	12-6	3	#4	13-0	3	#4	13-0	3	#4	14-3	3	#4	15-0	3	#4	15-6	3	#4	16-0	3	#4	16-6	3	#4	17-6	3	#4	18-0
t2	str	3	#4	18-9	3	#4	19-0	3	#4	19-9	3	#4	20-6	3	#4	21-3	3	#4	21-6	3	#4	22-3	3	#4	23-0	3	#4	23-6	3	#4	24-3
t3	str							1	#4	23-0	1	#4	24-0	1	#4	27-0	2	#4	27-0	2	#4	28-0	3	#4	29-0	3	#4	30-0	3	#4	30-6
t4	str	2	#4	12-0	2	#4	11-6	1	#4	11-0	2	#4	11-6	2	#4	14-0	2	#4	14-0	2	#4	15-0	2	#4	13-0	2	#4	16-0	2	#4	21-0
t5	str																														
t6	str																														
t7	str																														
t8	str																														
t9	str																														
t10	str	1	#4	25-6	1	#4	26-6	1	#4	28-0	1	#4	29-0	1	#4	31-0	1	#4	32-0	1	#4	33-6	1	#4	35-0	1	#4	36-6	1	#4	38-0

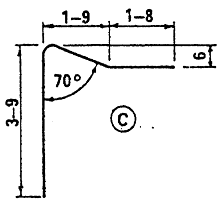

Registered Professional Engineer, Certificate, R. C. Brechler, Dec. 31, 19.., Arizona, U.S.

DESIGN APPROVED	STATE OF ARIZONA DEPARTMENT OF TRANSPORTATION DIVISION OF HIGHWAYS STANDARD DRAWINGS	REVISION
R.C. Brechler		
APPROVED FOR DISTRIBUTION	OUTLET APRON STEEL LIST	STANDARD NO. PH-21
	2:1 SLOPE	DRAWING NO. B-17.02

DESIGN KW 9-72 | DRAWN LAM 9-72 | CHECKED RLC 9-72

RIGHT ANGLE

Mark	Bend	90" Dia			96" Dia			102" Dia			108" Dia			114" Dia			120" Dia			126" Dia			132" Dia			138" Dia			144" Dia		
		No	Size	Lgth	No	Size	Lgth	No	Size	Lgth	No	Size	Lgth	No	Size	Lgth	No	Size	Lgth	No	Size	Lgth	No	Size	Lgth	No	Size	Lgth	No	Size	Lgth
h	C	16	#4	7-3	17	#4	7-3	17	#4	7-3	18	#4	7-3	18	#4	7-3	19	#4	7-3	20	#4	7-3	20	#4	7-3	21	#4	7-3	21	#4	7-3
j	str	1	#4	25-3	1	#4	26-3	1	#4	27-3	1	#4	28-6	1	#4	29-6	1	#4	30-6	1	#4	32-0	1	#4	33-0	1	#4	34-0	1	#4	35-3
r1	str	9	#4	11-0	9	#4	11-6	10	#4	12-3	10	#4	13-9	11	#4	13-6	11	#4	14-3	12	#4	15-0	12	#4	15-6	12	#4	16-0	13	#4	16-6
r2	str	4	#4	7-3	4	#4	8-0	4	#4	8-3	4	#4	8-0	4	#4	10-3	4	#4	10-0	4	#4	10-3	4	#4	11-3	4	#4	12-6	4	#4	12-0
r3	str	2	#4	4-6	2	#4	5-3	2	#4	5-0	2	#4	6-3	4	#4	5-3	4	#4	5-0	4	#4	6-3	4	#4	6-0	4	#4	7-0	4	#4	5-9
r4	str																														
s	str	33	#4	3-0	35	#4	3-0	36	#4	3-0	38	#4	3-0	39	#4	3-0	41	#4	3-0	42	#4	3-0	44	#4	3-0	46	#4	3-0	48	#4	3-0
t1	str	3	#4	8-6	3	#4	8-9	3	#4	9-3	3	#4	9-6	3	#4	10-0	3	#4	10-6	3	#4	11-0	3	#4	11-6	3	#4	12-0	3	#4	12-3
t2	str	3	#4	11-0	3	#4	11-0	3	#4	11-6	3	#4	12-0	3	#4	12-3	3	#4	12-9	3	#4	13-3	3	#4	13-9	3	#4	14-3	3	#4	14-6
t3	str	3	#4	13-0	3	#4	13-3	3	#4	13-9	3	#4	14-3	3	#4	14-6	3	#4	15-3	3	#4	15-6	3	#4	16-0	3	#4	16-6	3	#4	16-6
t4	str	3	#4	15-6	2	#4	15-3	2	#4	15-9	3	#4	16-6	3	#4	16-9	3	#4	17-6	3	#4	17-6	3	#4	18-0	3	#4	18-9	3	#4	18-9
t5	str				2	#4	17-0	2	#4	17-6	2	#4	18-6	3	#4	19-0	3	#4	19-6	2	#4	19-9	2	#4	20-3	3	#4	21-0	3	#4	21-0
t6	str																			2	#4	21-6	2	#4	22-0	2	#4	23-0	3	#4	23-0
t7	str																														

30° SKEW

Mark	Bend	90" Dia			96" Dia			102" Dia			108" Dia			114" Dia			120" Dia			126" Dia			132" Dia			138" Dia			144" Dia		
		No	Size	Lgth	No	Size	Lgth	No	Size	Lgth	No	Size	Lgth	No	Size	Lgth	No	Size	Lgth	No	Size	Lgth	No	Size	Lgth	No	Size	Lgth	No	Size	Lgth
h	C	14	#4	7-3	15	#4	7-3	16	#4	7-3	17	#4	7-3	17	#4	7-3	18	#4	7-3	18	#4	7-3	19	#4	7-3	20	#4	7-3	20	#4	7-3
j	str	1	#4	28-0	1	#4	29-3	1	#4	31-0	1	#4	32-6	1	#4	34-3	1	#4	35-0	1	#4	37-0	1	#4	39-0	1	#4	40-0	1	#4	42-0
r1	str	9	#4	11-0	10	#4	11-6	11	#4	12-3	11	#4	12-9	12	#4	13-0	12	#4	13-6	13	#4	14-0	13	#4	14-6	14	#4	15-0	14	#4	15-6
r2	str	2	#4	9-3	2	#4	9-3	2	#4	9-6	2	#4	10-6	2	#4	10-6	2	#4	11-3	2	#4	11-6	2	#4	12-6	2	#4	12-6	2	#4	13-3
r3	str	2	#4	7-3	2	#4	7-3	2	#4	7-6	2	#4	8-6	2	#4	8-6	2	#4	9-3	2	#4	9-6	2	#4	10-6	2	#4	10-6	2	#4	11-0
r4	str	2	#4	5-3	2	#4	5-3	2	#4	5-6	2	#4	6-6	2	#4	6-6	2	#4	7-3	2	#4	7-6	2	#4	8-6	2	#4	8-6	2	#4	9-0
r5	str	2	#4	3-3	2	#4	3-3	2	#4	3-6	2	#4	4-6	2	#4	4-6	2	#4	5-3	2	#4	5-3	2	#4	6-6	2	#4	6-6	2	#4	7-0
r6	str										1	#4	3-6	1	#4	3-6	2	#4	3-6	2	#4	3-6	2	#4	4-0	2	#4	4-6	2	#4	5-3
r7	str																						1	#4	3-6	1	#4	3-6	2	#4	3-6
r8	str																														
s	str	34	#4	3-0	35	#4	3-0	37	#4	3-0	39	#4	3-0	41	#4	3-0	43	#4	3-0	44	#4	3-0	47	#4	3-0	48	#4	3-0	50	#4	3-0
t1	str	2	#4	9-6	2	#4	10-0	2	#4	10-6	2	#4	11-0	2	#4	11-6	2	#4	12-0	2	#4	12-6	2	#4	13-0	2	#4	13-6	2	#4	14-0
t2	str	2	#4	12-0	2	#4	12-6	2	#4	13-0	2	#4	13-6	2	#4	14-0	2	#4	14-6	2	#4	15-0	2	#4	15-6	2	#4	16-0	2	#4	16-6
t3	str	2	#4	14-6	2	#4	15-0	2	#4	15-6	2	#4	16-0	2	#4	16-6	2	#4	17-0	2	#4	17-6	2	#4	18-0	2	#4	18-6	2	#4	19-0
t4	str	2	#4	16-9	2	#4	17-6	2	#4	18-0	2	#4	18-6	2	#4	19-0	2	#4	19-6	2	#4	20-0	2	#4	20-6	2	#4	21-0	2	#4	21-6
t5	str	1	#4	19-0	2	#4	19-9	2	#4	20-6	2	#4	21-0	2	#4	21-6	2	#4	22-0	2	#4	22-6	2	#4	23-0	2	#4	23-6	2	#4	24-0
t6	str										1	#4	22-6	1	#4	24-0	2	#4	24-6	2	#4	25-0	2	#4	25-0	2	#4	25-0	2	#4	26-6
t7	str																						1	#4	25-6	1	#4	27-6	1	#4	29-0
t8	str	2	#4	12-0	2	#4	9-0	2	#4	14-0	2	#4	11-0	2	#4	14-9	2	#4	11-9	2	#4	15-9	2	#4	14-0	2	#4	17-0	2	#4	18-3
t9	str																														
t10	str	1	#4	20-0	1	#4	21-3	1	#4	22-3	1	#4	23-6	1	#4	24-6	1	#4	26-0	1	#4	27-0	1	#4	28-3	1	#4	29-3	1	#4	30-3

15° SKEW

Mark	Bend	90" Dia			96" Dia			102" Dia			108" Dia			114" Dia			120" Dia			126" Dia			132" Dia			138" Dia			144" Dia		
		No	Size	Lgth	No	Size	Lgth	No	Size	Lgth	No	Size	Lgth	No	Size	Lgth	No	Size	Lgth	No	Size	Lgth	No	Size	Lgth	No	Size	Lgth	No	Size	Lgth
h	C	11	#4	7-3	12	#4	7-3	12	#4	7-3	13	#4	7-3	13	#4	7-3	14	#4	7-3	14	#4	7-3	15	#4	7-3	15	#4	7-3	16	#4	7-3
j	str	1	#4	23-9	1	#4	25-0	1	#4	26-0	1	#4	27-3	1	#4	28-6	1	#4	30-0	1	#4	31-0	1	#4	32-3	1	#4	33-3	1	#4	34-9
r1	str	8	#4	11-3	9	#4	11-9	9	#4	12-6	10	#4	13-0	11	#4	13-6	11	#4	14-0	11	#4	14-9	12	#4	15-6	12	#4	16-0	13	#4	16-3
r2	str	2	#4	9-3	2	#4	9-3	2	#4	10-9	2	#4	10-9	2	#4	10-6	2	#4	11-3	2	#4	12-9	2	#4	12-6	2	#4	13-9	2	#4	13-6
r3	str	2	#4	6-3	2	#4	6-6	2	#4	7-9	2	#4	7-6	2	#4	7-6	2	#4	8-6	2	#4	10-0	2	#4	9-6	2	#4	10-9	2	#4	10-6
r4	str	1	#4	4-9	1	#4	4-9	2	#4	4-9	2	#4	4-6	2	#4	4-6	2	#4	5-6	2	#4	7-0	2	#4	6-6	2	#4	7-9	2	#4	7-9
r5	str																			1	#4	5-6	1	#4	5-3	2	#4	5-0	2	#4	4-9
r6	str																														
r7	str																														
s	str	30	#4	3-0	33	#4	3-0	35	#4	3-0	36	#4	3-0	38	#4	3-0	39	#4	3-0	42	#4	3-0	43	#4	3-0	44	#4	3-0	46	#4	3-0
t1	str	2	#4	8-3	2	#4	9-0	2	#4	9-6	2	#4	9-9	2	#4	10-0	2	#4	10-6	2	#4	11-0	2	#4	11-3	2	#4	11-9	2	#4	12-3
t2	str	2	#4	9-9	2	#4	10-3	2	#4	10-6	2	#4	11-0	2	#4	11-6	2	#4	12-0	2	#4	12-3	2	#4	12-9	2	#4	13-3	2	#4	13-9
t3	str	2	#4	11-3	2	#4	11-9	2	#4	12-0	2	#4	12-6	2	#4	13-0	2	#4	13-6	2	#4	13-9	2	#4	14-3	2	#4	14-6	2	#4	15-3
t4	str	2	#4	12-6	2	#4	13-0	2	#4	13-6	2	#4	14-0	2	#4	14-6	2	#4	14-9	2	#4	15-3	2	#4	15-9	2	#4	16-0	2	#4	16-9
t5	str	2	#4	14-3	2	#4	14-6	2	#4	15-0	2	#4	15-6	2	#4	16-0	2	#4	16-3	2	#4	16-9	2	#4	17-3	2	#4	17-6	2	#4	18-3
t6	str							1	#4	16-3	2	#4	16-9	2	#4	17-3	2	#4	17-9	2	#4	18-3	2	#4	18-9	2	#4	19-0	2	#4	19-9
t7	str																1	#4	19-3	2	#4	19-9	2	#4	20-3	2	#4	20-6	2	#4	21-3
t8	str	2	#4	9-3	2	#4	11-3	2	#4	8-9	2	#4	9-9	2	#4	14-3	2	#4	9-9	2	#4	9-0	2	#4	9-6	2	#4	15-6	2	#4	17-9
t9	str																														
t10	str																														
t11	str	1	#4	16-0	1	#4	16-9	1	#4	17-9	1	#4	18-6	1	#4	19-6	1	#4	20-3	1	#4	21-0	1	#4	22-0	1	#4	22-9	1	#4	24-0

45° SKEW

Mark	Bend	90" Dia			96" Dia			102" Dia			108" Dia			114" Dia			120" Dia			126" Dia			132" Dia			138" Dia			144" Dia		
		No	Size	Lgth	No	Size	Lgth	No	Size	Lgth	No	Size	Lgth	No	Size	Lgth	No	Size	Lgth	No	Size	Lgth	No	Size	Lgth	No	Size	Lgth	No	Size	Lgth
h	C	18	#4	7-3	19	#4	7-3	20	#4	7-3	21	#4	7-3	22	#4	7-3	22	#4	7-3	23	#4	7-3	24	#4	7-3	25	#4	7-3	26	#4	7-3
j	str	1	#4	36-6	1	#4	33-3	1	#4	38-9	1	#4	40-9	1	#4	42-6	1	#4	44-0	1	#4	46-3	1	#4	48-0	1	#4	50-3	1	#4	51-9
r1	str	12	#4	10-3	12	#4	10-9	13	#4	11-3	13	#4	11-9	14	#4	12-3	15	#4	12-6	16	#4	13-0	16	#4	13-9	17	#4	14-0	17	#4	14-6
r2	str	3	#4	7-6	3	#4	8-3	3	#4	8-6	3	#4	9-6	3	#4	10-0	3	#4	9-9	3	#4	10-6	3	#4	11-0	3	#4	11-9	3	#4	12-3
r3	str	3	#4	5-6	3	#4	6-3	3	#4	6-6	3	#4	7-9	3	#4	7-9	3	#4	7-9	3	#4	8-6	3	#4	9-0	3	#4	9-9	3	#4	10-3
r4	str	3	#4	3-6	2	#4	4-0	2	#4	4-6	3	#4	5-6	3	#4	5-9	3	#4	6-0	3	#4	6-6	3	#4	7-0	3	#4	7-9	3	#4	8-9
r5	str				2	#4	3-0	2	#4	3-6	2	#4	4-0	3	#4	4-0	3	#4	4-0	2	#4	4-0	2	#4	5-0	3	#4	5-9	3	#4	6-3
r6	str																			2	#4	3-0	2	#4	4-0	3	#4	3-9	3	#4	4-3
r7	str																														
r8	str																														
r9	str																														
r10	str																														
s	str	39	#4	3-0	40	#4	3-0	42	#4	3-0	45	#4	3-0	47	#4	3-0	48	#4	3-0	50	#4	3-0	52	#4	3-0	54	#4	3-0	56	#4	3-0
t1	str	2	#4	12-0	2	#4	12-6	2	#4	13-0	2	#4	13-6	2	#4	14-6	2	#4	15-0	2	#4	15-6	2	#4	16-0	2	#4	16-9	2	#4	17-6
t2	str	2	#4	16-3	2	#4	16-9	2	#4	17-3	2	#4	17-9	2	#4	18-9	2	#4	19-3	2	#4	19-9	2	#4	20-0	2	#4	21-0	2	#4	22-0
t3	str	2	#4	20-6	2	#4	21-0	2	#4	21-6	2	#4	22-0	2	#4	23-0	2	#4	23-6	2	#4	24-0	2	#4	24-3	2	#4	25-6	2	#4	26-3
t4	str	2	#4	23-3	2	#4	24-0	2	#4	24-9	2	#4	26-0	2	#4	27-0	2	#4	27-9	2	#4	28-6	2	#4	28-6	2	#4	29-9	2	#4	30-6
t5	str	2	#4	12-0	2	#4	16-0	2	#4	17-0	2	#4	21-0	2	#4	21-0	2	#4	26-0	2	#4	27-6	2	#4	32-0	2	#4	33-0	2	#4	34-0
t6	str	2	#4	6-0	2	#4	7-0	2	#4	8-6	2	#4	12-6	2	#4	14-0	2	#4	17-3	2	#4	19-0	2	#4	23-0	2	#4	26-9	2	#4	30-0
t7	str										1	#4	7-6	2	#4	7-6	2	#4	9-0	2	#4	10-6	2	#4	14-0	2	#4	17-6	2	#4	19-6
t8	str																						1	#4	10-0	2	#4	9-0	2	#4	11-0
t9	str																														
t10	str	1	#4	26-0	1	#4	27-6	1	#4	28-9	1	#4	30-0	1	#4	31-6	1	#4	32-9	1	#4	34-6	1	#4	35-9	1	#4	37-6	1	#4	38-9

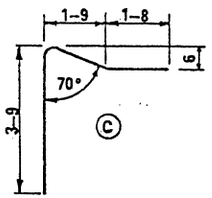

DESIGN	KW	9-72	DRAWN	LAM	9-72	CHECKED	RLC	9-72

DESIGN APPROVED R.C. Brechler

APPROVED FOR DISTRIBUTION

STATE OF ARIZONA
DEPARTMENT OF TRANSPORTATION
DIVISION OF HIGHWAYS
STANDARD DRAWINGS

OUTLET APRON STEEL LIST

4:1 SLOPE

REVISION

STANDARD NO. PH-22

DRAWING NO. B-17.03

RIGHT ANGLE

Mark	Bend	90" Dia			96" Dia			102" Dia			108" Dia			114" Dia			120" Dia			126" Dia			132" Dia			138" Dia			144" Dia		
		No	Size	Lgth	No	Size	Lgth	No	Size	Lgth	No	Size	Lgth	No	Size	Lgth	No	Size	Lgth	No	Size	Lgth	No	Size	Lgth	No	Size	Lgth	No	Size	Lgth
h	C	17	#4	7-3	18	#4	7-3	18	#4	7-3	19	#4	7-3	20	#4	7-3	20	#4	7-3	20	#4	7-3	21	#4	7-3	22	#4	7-3	22	#4	7-3
j	str	1	#4	26-6	1	#4	28-0	1	#4	29-0	1	#4	30-3	1	#4	31-6	1	#4	32-9	1	#4	33-9	1	#4	35-0	1	#4	36-3	1	#4	37-6
r1	str	9	#4	12-6	9	#4	13-3	10	#4	14-0	10	#4	14-9	11	#4	15-6	11	#4	16-3	11	#4	17-0	12	#4	17-9	12	#4	18-6	13	#4	19-3
r2	str	4	#4	7-6	4	#4	8-9	4	#4	8-9	4	#4	10-0	4	#4	10-9	4	#4	12-0	4	#4	12-0	4	#4	12-0	4	#4	13-6	4	#4	13-3
r3	str	2	#4	5-0	2	#4	6-0	2	#4	6-0	4	#4	4-6	4	#4	4-3	4	#4	6-9	4	#4	6-9	4	#4	6-9	4	#4	8-0	4	#4	7-9
r4	str																									2	#4	5-3	2	#4	4-9
s	str	34	#4	2-0	36	#4	2-0	39	#4	2-0	41	#4	2-6	42	#4	2-6	44	#4	2-6	47	#4	2-6	47	#4	3-0	48	#4	3-0	50	#4	3-0
t1	str	3	#4	8-0	3	#4	8-9	3	#4	9-3	3	#4	9-6	3	#4	10-0	3	#4	10-0	3	#4	10-9	3	#4	11-3	3	#4	11-9	3	#4	12-0
t2	str	3	#4	10-6	3	#4	11-0	3	#4	11-9	3	#4	11-9	3	#4	12-3	3	#4	13-0	3	#4	13-0	3	#4	13-6	3	#4	14-0	3	#4	14-0
t3	str	3	#4	12-9	3	#4	13-0	3	#4	13-9	3	#4	14-0	3	#4	14-6	3	#4	15-3	3	#4	15-3	3	#4	15-9	3	#4	16-6	3	#4	17-0
t4	str	3	#4	15-0	3	#4	15-6	3	#4	16-0	3	#4	16-3	3	#4	16-6	3	#4	17-6	3	#4	17-9	3	#4	18-0	3	#4	18-6	3	#4	19-0
t5	str	2	#4	17-0	2	#4	17-6	3	#4	18-0	2	#4	18-6	2	#4	19-0	3	#4	19-6	3	#4	20-0	3	#4	20-0	3	#4	20-6	3	#4	20-9
t6	str										2	#4	20-0	2	#4	20-6	2	#4	21-6	3	#4	22-0	3	#4	22-3	2	#4	22-9	3	#4	23-0
t7	str																									2	#4	24-3	2	#4	25-0

30° SKEW

Mark	Bend	90" Dia			96" Dia			102" Dia			108" Dia			114" Dia			120" Dia			126" Dia			132" Dia			138" Dia			144" Dia		
		No	Size	Lgth	No	Size	Lgth	No	Size	Lgth	No	Size	Lgth	No	Size	Lgth	No	Size	Lgth	No	Size	Lgth	No	Size	Lgth	No	Size	Lgth	No	Size	Lgth
h	C	17	#4	7-3	18	#4	7-3	18	#4	7-3	19	#4	7-3	20	#4	7-3	20	#4	7-3	21	#4	7-3	22	#4	7-3	22	#4	7-3	23	#4	7-3
j	str	1	#4	32-0	1	#4	33-6	1	#4	34-0	1	#4	36-6	1	#4	38-0	1	#4	39-0	1	#4	40-0	1	#4	41-0	1	#4	42-0	1	#4	43-0
r1	str	10	#4	12-9	11	#4	13-3	11	#4	14-0	12	#4	14-9	12	#4	15-6	12	#4	16-0	13	#4	16-6	13	#4	17-6	14	#4	18-0	14	#4	18-3
r2	str	2	#4	11-3	2	#4	11-6	2	#4	12-3	2	#4	13-0	2	#4	14-0	2	#4	14-9	2	#4	14-9	2	#4	16-0	2	#4	16-0	2	#4	17-0
r3	str	2	#4	9-6	2	#4	9-6	2	#4	10-3	2	#4	11-0	2	#4	12-0	2	#4	12-9	2	#4	13-0	2	#4	14-0	2	#4	14-0	2	#4	15-3
r4	str	2	#4	7-0	2	#4	7-9	2	#4	8-6	2	#4	9-0	2	#4	10-3	2	#4	10-9	2	#4	11-0	2	#4	12-0	2	#4	12-0	2	#4	13-3
r5	str	2	#4	5-3	2	#4	6-0	2	#4	6-6	2	#4	7-3	2	#4	8-3	2	#4	9-0	2	#4	9-0	2	#4	10-0	2	#4	10-0	2	#4	11-3
r6	str	1	#4	4-9	2	#4	4-0	2	#4	4-9	2	#4	5-3	2	#4	6-3	2	#4	7-0	2	#4	7-0	2	#4	8-0	2	#4	8-0	2	#4	9-3
r7	str										1	#4	4-3	2	#4	4-6	2	#4	5-0	2	#4	5-0	2	#4	6-3	2	#4	6-0	2	#4	7-6
r8	str																1	#4	4-0				2	#4	4-3	2	#4	4-0	2	#4	5-6
s	str	40	#4	3-0	42	#4	3-0	44	#4	3-0	45	#4	3-0	47	#4	3-0	49	#4	3-0	51	#4	3-0	52	#4	3-0	54	#4	3-0	56	#4	3-0
t1	str	2	#4	9-6	2	#4	10-0	2	#4	10-6	2	#4	11-0	2	#4	11-6	2	#4	12-0	2	#4	12-6	2	#4	13-0	2	#4	13-0	2	#4	14-0
t2	str	2	#4	12-0	2	#4	12-6	2	#4	13-0	2	#4	13-6	2	#4	14-0	2	#4	14-6	2	#4	15-0	2	#4	15-6	2	#4	15-6	2	#4	16-6
t3	str	2	#4	14-6	2	#4	15-0	2	#4	15-6	2	#4	16-0	2	#4	16-6	2	#4	17-0	2	#4	17-6	2	#4	18-0	2	#4	18-0	2	#4	19-0
t4	str	2	#4	17-0	2	#4	17-6	2	#4	18-0	2	#4	18-6	2	#4	19-0	2	#4	19-6	2	#4	20-0	2	#4	20-6	2	#4	20-3	2	#4	21-6
t5	str	2	#4	19-6	2	#4	20-0	2	#4	20-0	2	#4	21-0	2	#4	21-6	2	#4	22-0	2	#4	22-6	2	#4	22-9	2	#4	22-9	2	#4	24-0
t6	str	1	#4	22-0	2	#4	22-0	2	#4	23-0	2	#4	23-0	2	#4	24-0	2	#4	24-6	2	#4	25-0	2	#4	25-0	2	#4	25-0	2	#4	26-6
t7	str										1	#4	26-0	2	#4	26-0	2	#4	26-6	2	#4	27-0	2	#4	27-6	2	#4	27-6	2	#4	29-0
t8	str																			1	#4	28-6	2	#4	27-0	2	#4	30-0	2	#4	30-6
t9	str	2	#4	12-0	2	#4	12-0	2	#4	14-3	2	#4	12-6	2	#4	12-9	2	#4	15-0	2	#4	13-3	2	#4	13-0	2	#4	14-0	2	#4	20-6
t10	str	1	#4	23-9	1	#4	24-0	1	#4	25-9	1	#4	26-9	1	#4	28-0	1	#4	29-0	1	#4	30-0	1	#4	31-0	1	#4	32-0	1	#4	33-0

15° SKEW

Mark	Bend	90" Dia			96" Dia			102" Dia			108" Dia			114" Dia			120" Dia			126" Dia			132" Dia			138" Dia			144" Dia		
		No	Size	Lgth	No	Size	Lgth	No	Size	Lgth	No	Size	Lgth	No	Size	Lgth	No	Size	Lgth	No	Size	Lgth	No	Size	Lgth	No	Size	Lgth	No	Size	Lgth
h	C	13	#4	7-3	13	#4	7-3	14	#4	7-3	15	#4	7-3	15	#4	7-3	16	#4	7-3	16	#4	7-3	17	#4	7-3	18	#4	7-3	19	#4	7-3
j	str	1	#4	25-9	1	#4	27-0	1	#4	28-3	1	#4	29-9	1	#4	31-0	1	#4	32-3	1	#4	33-6	1	#4	34-6	1	#4	36-3	1	#4	37-9
r1	str	9	#4	13-3	9	#4	14-0	10	#4	14-9	10	#4	15-6	11	#4	16-0	11	#4	16-9	12	#4	17-6	12	#4	18-3	12	#4	19-0	13	#4	19-9
r2	str	2	#4	11-0	2	#4	12-0	2	#4	11-6	2	#4	13-0	2	#4	12-9	2	#4	14-0	2	#4	14-6	2	#4	15-6	2	#4	17-0	2	#4	17-0
r3	str	2	#4	7-6	2	#4	9-0	2	#4	8-6	2	#4	10-0	2	#4	10-0	2	#4	11-6	2	#4	12-0	2	#4	12-6	2	#4	14-0	2	#4	14-0
r4	str	2	#4	5-0	2	#4	6-0	2	#4	6-0	2	#4	7-6	2	#4	7-0	2	#4	8-6	2	#4	8-6	2	#4	9-6	2	#4	11-6	2	#4	11-6
r5	str				2	#4	4-0	1	#4	4-6	2	#4	5-0	2	#4	4-0	2	#4	6-0	2	#4	5-0	2	#4	7-0	2	#4	8-6	2	#4	8-6
r6	str																						1	#4	5-0	2	#4	5-6	2	#4	5-6
r7	str																												1	#4	4-0
s	str	36	#4	3-0	38	#4	3-0	41	#4	3-0	42	#4	3-0	44	#4	3-0	47	#4	3-0	49	#4	3-0	51	#4	3-0	53	#4	3-0	55	#4	3-0
t1	str	2	#4	8-6	2	#4	9-0	2	#4	9-3	2	#4	9-6	2	#4	9-9	2	#4	10-3	2	#4	11-0	2	#4	11-3	2	#4	11-9	2	#4	12-3
t2	str	2	#4	10-0	2	#4	10-6	2	#4	11-0	2	#4	11-3	2	#4	11-6	2	#4	12-0	2	#4	12-6	2	#4	13-0	2	#4	13-6	2	#4	14-0
t3	str	2	#4	11-3	2	#4	11-9	2	#4	12-3	2	#4	12-6	2	#4	13-0	2	#4	13-6	2	#4	14-0	2	#4	14-6	2	#4	15-0	2	#4	15-3
t4	str	2	#4	13-0	2	#4	13-0	2	#4	13-6	2	#4	14-3	2	#4	14-6	2	#4	15-0	2	#4	15-6	2	#4	16-0	2	#4	16-6	2	#4	16-9
t5	str	2	#4	14-3	2	#4	14-6	2	#4	15-0	2	#4	15-9	2	#4	16-0	2	#4	16-6	2	#4	17-0	2	#4	17-6	2	#4	18-0	2	#4	18-3
t6	str	2	#4	15-6	2	#4	16-0	2	#4	16-6	2	#4	17-0	2	#4	17-6	2	#4	18-0	2	#4	18-3	2	#4	18-9	2	#4	19-3	2	#4	19-9
t7	str	1	#4	17-0	2	#4	17-6	2	#4	18-0	2	#4	18-6	2	#4	19-0	2	#4	19-0	2	#4	19-6	2	#4	20-0	2	#4	20-6	2	#4	21-3
t8	str	1	#4	9-0				1	#4	15-6	1	#4	20-0	2	#4	20-0	2	#4	20-6	2	#4	21-0	2	#4	21-6	2	#4	22-0	2	#4	22-6
t9	str										1	#4	14-0				1	#4	22-0	2	#4	22-6	2	#4	22-6	2	#4	23-6	2	#4	24-0
t10	str																						1	#4	24-0	1	#4	25-0	2	#4	25-6
t11	str	1	#4	17-3	1	#4	18-3	1	#4	19-3	1	#4	20-6	1	#4	21-6	1	#4	22-3	1	#4	23-0	1	#4	24-3	1	#4	25-3	1	#4	26-6

45° SKEW

Mark	Bend	90" Dia.			96" Dia.			102" Dia			108" Dia			114" Dia			120" Dia			126" Dia.			132" Dia.			138" Dia.			144" Dia		
		No	Size	Lgth	No	Size	Lgth	No	Size	Lgth	No	Size	Lgth	No	Size	Lgth	No	Size	Lgth	No	Size	Lgth	No	Size	Lgth	No	Size	Lgth	No	Size	Lgth
h	C	20	#4	7-3	21	#4	7-3	22	#4	7-3	23	#4	7-3	24	#4	7-3	25	#4	7-3	26	#4	7-3	27	#4	7-3	28	#4	7-3	29	#4	7-3
j	str	1	#4	39-0	1	#4	41-0	1	#4	43-0	1	#4	45-0	1	#4	47-0	1	#4	49-0	1	#4	51-0	1	#4	53-0	1	#4	55-0	1	#4	57-0
r1	str	12	#4	11-6	13	#4	11-9	13	#4	12-9	14	#4	13-6	15	#4	14-0	15	#4	14-9	16	#4	15-3	16	#4	16-0	17	#4	16-6	17	#4	17-0
r2	str	2	#4	9-9	2	#4	10-6	2	#4	11-6	2	#4	11-9	2	#4	12-0	2	#4	13-0	2	#4	13-6	2	#4	14-3	2	#4	14-6	2	#4	15-3
r3	str	2	#4	8-6	2	#4	9-0	2	#4	10-0	2	#4	10-3	2	#4	10-6	2	#4	11-6	2	#4	12-0	2	#4	13-0	2	#4	13-3	2	#4	14-0
r4	str	2	#4	7-3	2	#4	7-6	2	#4	8-9	2	#4	9-0	2	#4	9-3	2	#4	10-3	2	#4	10-6	2	#4	11-6	2	#4	11-9	2	#4	12-6
r5	str	2	#4	6-0	2	#4	6-3	2	#4	7-3	2	#4	7-6	2	#4	7-9	2	#4	9-0	2	#4	9-3	2	#4	10-3	2	#4	10-6	2	#4	11-0
r6	str	2	#4	4-6	2	#4	4-9	2	#4	6-0	2	#4	6-0	2	#4	6-6	2	#4	7-6	2	#4	7-9	2	#4	8-6	2	#4	9-0	2	#4	9-9
r7	str				1	#4	4-0	2	#4	4-6	2	#4	4-6	2	#4	5-0	2	#4	6-0	2	#4	6-3	2	#4	7-3	2	#4	7-6	2	#4	8-3
r8	str													2	#4	3-6	2	#4	4-6	2	#4	5-0	2	#4	6-0	2	#4	6-3	2	#4	6-9
r9	str																1	#4	4-0	1	#4	4-3	2	#4	4-6	2	#4	4-9	2	#4	5-6
r10	str																									1	#4	4-0	2	#4	4-0
s	str	41	#4	3-0	43	#4	3-0	45	#4	3-0	47	#4	3-0	49	#4	3-0	52	#4	3-0	54	#4	3-0	56	#4	3-0	58	#4	3-0	60	#4	3-0
t1	str	2	#4	12-0	2	#4	12-6	2	#4	13-6	2	#4	14-0	2	#4	14-9	2	#4	15-3	2	#4	15-9	2	#4	16-3	2	#4	17-0	2	#4	17-3
t2	str	2	#4	16-3	2	#4	16-9	2	#4	17-6	2	#4	18-3	2	#4	19-0	2	#4	19-6	2	#4	20-0	2	#4	20-6	2	#4	21-3	2	#4	21-9
t3	str	2	#4	20-6	2	#4	21-0	2	#4	21-9	2	#4	22-6	2	#4	23-6	2	#4	23-9	2	#4	24-3	2	#4	24-6	2	#4	25-6	2	#4	26-3
t4	str	2	#4	25-0	2	#4	25-9	2	#4	26-0	2	#4	26-9	2	#4	27-9	2	#4	28-0	2	#4	28-6	2	#4	29-0	2	#4	29-9	2	#4	30-6
t5	str	2	#4	17-6	2	#4	22-6	2	#4	25-0	2	#4	28-0	2	#4	31-0	2	#4	32-6	2	#4	32-9	2	#4	33-6	2	#4	34-6	2	#4	35-0
t6	str	2	#4	10-6	2	#4	14-6	2	#4	16-6	2	#4	20-0	2	#4	21-0	2	#4	25-3	2	#4	26-0	2	#4	31-9	2	#4	33-0	2	#4	38-0
t7	str	1	#4	7-0	1	#4	10-0	2	#4	9-6	2	#4	11-6	2	#4	13-0	2	#4	17-3	2	#4	18-6	2	#4	23-3	2	#4	24-0	2	#4	28-0
t8	str										1	#4	7-6	1	#4	8-6	2	#4	9-3	2	#4	10-0	2	#4	15-6	2	#4	15-6	2	#4	20-0
t9	str																						1	#4	11-6	1	#4	11-0	2	#4	12-6
t10	str	1	#4	28-6	1	#4	30-0	1	#4	31-6	1	#4	33-0	1	#4	34-6	1	#4	36-0	1	#4	37-6	1	#4	39-0	1	#4	40-0	1	#4	42-0

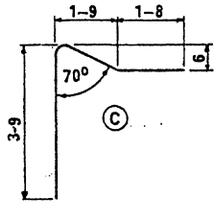

Registered Professional Engineer
CERTIFICATE EXPIRES
R. C. BRECHLER
DEC. 31, 19
ARIZONA, U.S.

DESIGN APPROVED	STATE OF ARIZONA DEPARTMENT OF TRANSPORTATION DIVISION OF HIGHWAYS STANDARD DRAWINGS	REVISION
R.C. Brechler		
APPROVED FOR DISTRIBUTION	OUTLET APRON STEEL LIST 6:1 SLOPE	STANDARD NO. PH-23 DRAWING NO. B-17.04

DESIGN	KW	9-72	DRAWN	LAM	9-72	CHECKED	RLC	9-72

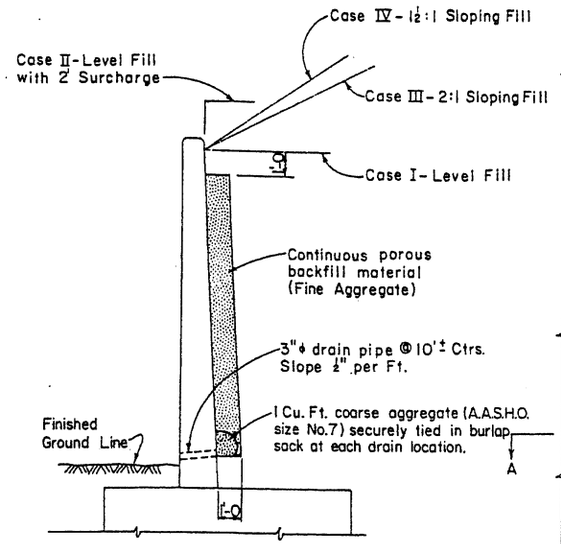

TYPICAL SECTION

Showing Design Cases & Drainage

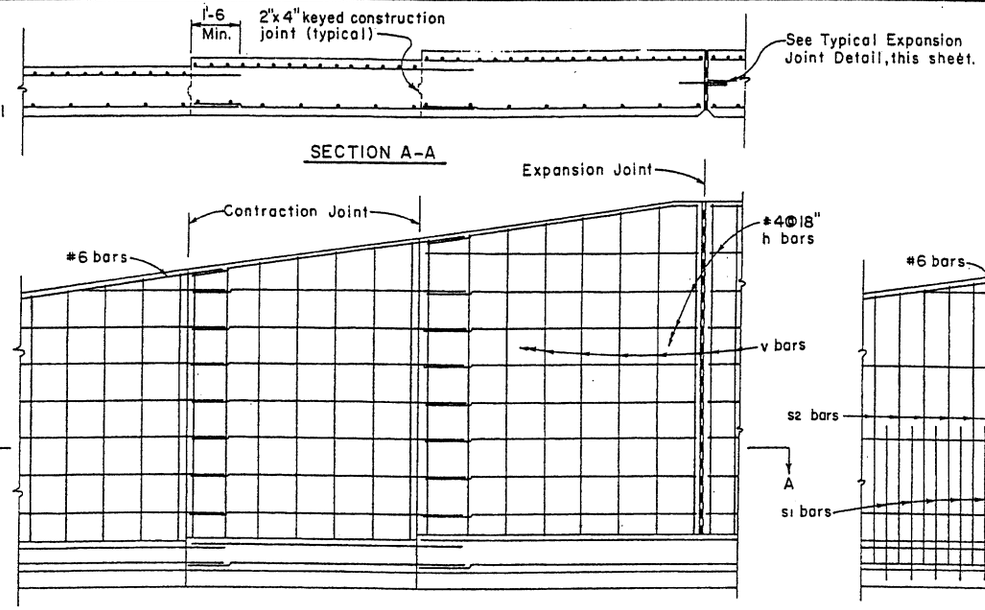

TYPICAL ELEVATION

Outside Face Reinforcing

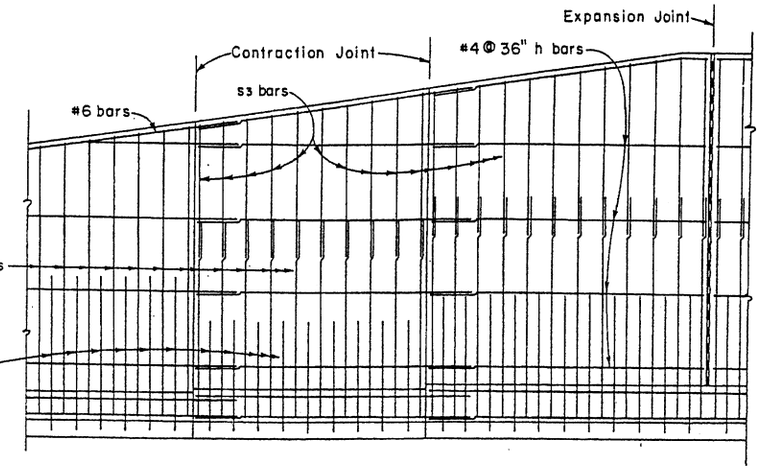

TYPICAL ELEVATION

Inside Face Reinforcing

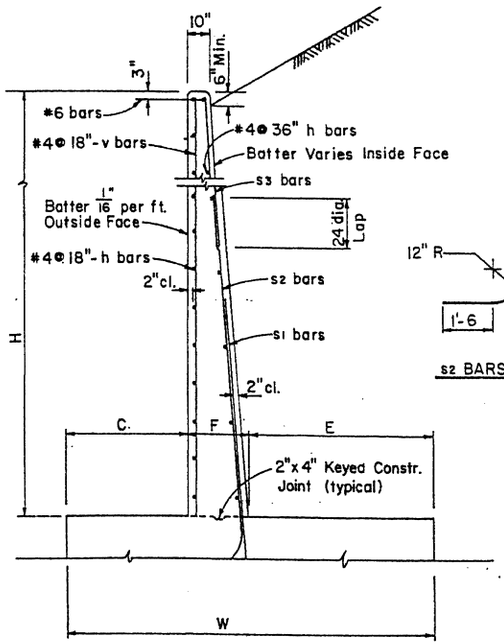

TYPICAL STEM DETAIL

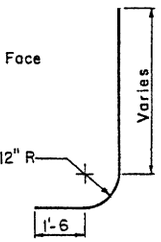

s2 BARS

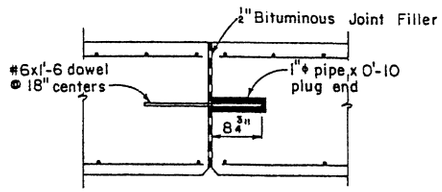

TYPICAL EXPANSION JOINT DETAIL

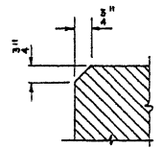

Chamfer all exposed corners thus unless otherwise noted.

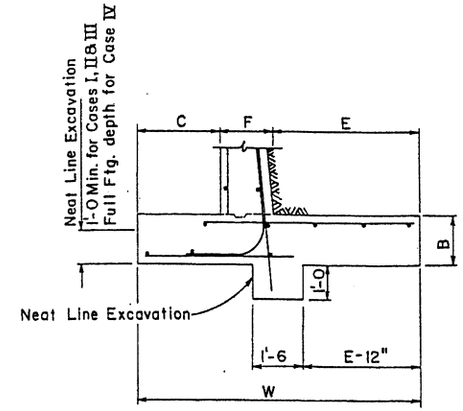

SPREAD FOOTING DETAIL

See Footing Steel Detail on Std. RW-2

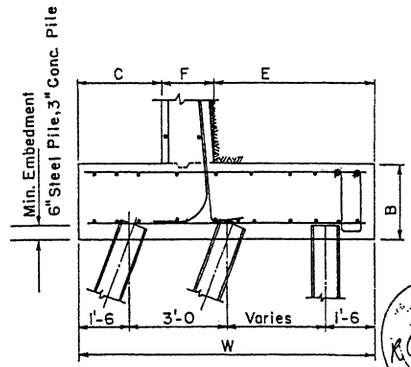

PILE FOOTING DETAIL

See Footing Steel Detail on Std. RW-3 & RW-4

GENERAL NOTES

Construction - Std. Specs. Arizona Highway Department Edition of 1969, revised to date.
Design - A.A.S.H.O. Std. Specs. for Highway Bridges 1973.

Dead Load - Weight of backfill = 120 P.C.F.
Equivalent Fluid Pressure = 35 P.C.F.
Stresses - Class A Concrete fc = 1000 P.S.I., n = 12
Reinforcing Steel fs = 20,000 P.S.I.
All Concrete shall be Class A.
Reinforcing Steel shall conform to A.S.T.M. Spec. A-615, Grade 40.
All Reinforcing Steel shall have 2" clear cover unless noted otherwise.

JOINT NOTE

All Retaining Walls shall have Formed Contraction Joints spaced not more than 30'-0 apart or as shown. Reinforcing Steel shall project through the joint.
Expansion Joints shall be provided at intervals not exceeding 90'-0.
Footings may be continuous with no joint.

BATTERED PILE NOTE

Batter Piles 3:12 for Cases I & II, 4:12 for Cases III & IV.

NO.	DESCRIPTION OF REVISIONS	MADE BY	DATE
1			
2			
3			

DESIGN	DHY	9-72
DRAWN	GFB	2-73
CHECKED	NAB	3-73

DESIGN APPROVED: R.C. Brechler

APPROVED FOR DISTRIBUTION: F. E. Hendrickson

STATE OF ARIZONA
DEPARTMENT OF TRANSPORTATION
DIVISION OF HIGHWAYS
STANDARD DRAWINGS

CANTILEVER
RETAINING WALL DETAILS

REVISION

STANDARD NO. RW-1

DRAWING NO. B-18.01

CASE I - LEVEL FILL

H	W	B	C	F	E	s1 Size	s1 Spacing	s1 Length	s2 Size	s2 Spacing	s2 Length	s3 Size	s3 Spacing	s3 Length	h Number ⊕	v Length	b Size	b Spacing	b Length	f1 Number ⊕	t Size	t Spacing	t Length	f2 Number ⊕	Concrete Cu. Yds. / Lin. Ft.	Steel Lbs. / Lin. Ft.	Max. Toe Press. Lbs. / Sq. Ft.
4'	2'-9	1'-3	0'-9	1'-0	1'-0	#5	12"	5'-9							3	3'-9	#5	12"	2'-0	2	#5	12"	2'-3	3	.319	20.45	980
5'	3'-0	1'-3	1'-0	1'-0	1'-0	#5	12"	6'-9							4	4'-9	#5	12"	2'-3	2	#5	12"	2'-3	3	.364	22.87	1190
6'	3'-3	1'-3	1'-1	1'-0	1'-2	#5	12"	7'-9							5	5'-9	#5	12"	2'-6	2	#5	12"	2'-6	3	.410	25.54	1510
7'	3'-9	1'-3	1'-3	1'-0	1'-6	#5	12"	8'-9							6	6'-9	#5	12"	2'-6	2	#5	12"	2'-9	3	.467	27.96	1650
8'	4'-3	1'-3	1'-5	1'-0	1'-10	#5	12"	9'-9							7	7'-9	#5	12"	2'-9	3	#5	12"	3'-3	3	.524	31.57	1790
9'	4'-9	1'-3	1'-7	1'-0	2'-2	#5	12"	10'-9							8	8'-9	#5	12"	3'-0	3	#5	12"	3'-6	3	.581	34.24	1930
10'	5'-3	1'-3	1'-9	1'-0	2'-6	#6	12"	11'-9							9	9'-9	#5	12"	3'-0	3	#5	12"	3'-9	3	.638	42.06	2070
11'	5'-9	1'-3	1'-11	1'-0	2'-10	#5	13"	5'-9	#5	13"	13'-9				10	10'-9	#5	13"	3'-3	3	#6	13"	4'-3	4	.695	46.94	2210
12'	6'-3	1'-3	2'-1	1'-0	3'-2	#6	12"	6'-9	#5	12"	14'-9				11	11'-9	#5	12"	3'-6	3	#5	6"	4'-6	4	.752	58.82	2350
13'	6'-9	1'-3	2'-3	1'-0	3'-6	#7	11"	7'-6	#5	11"	15'-9				12	12'-9	#5	11"	3'-6	3	#7	11"	5'-3	4	.809	71.71	2490
14'	7'-0	1'-3	2'-4	1'-1	3'-7	#8	14"	8'-0	#6	14"	16'-9				13	13'-9	#6	14"	3'-9	3	#6	7"	5'-0	4	.877	80.06	2810
15'	7'-6	1'-3	2'-6	1'-2	3'-10	#8	12"	8'-6	#6	12"	17'-9				14	14'-9	#6	12"	4'-0	3	#6	6"	5'-3	4	.958	94.74	2950
16'	8'-0	1'-3	2'-8	1'-3	4'-1	#8	12"	8'-3	#7	12"	11'-3	#5	12"	8'-9	15	15'-9	#5	6"	4'-3	3	#7	6"	5'-9	4	1.043	111.23	3090
17'	8'-6	1'-4	2'-10	1'-4	4'-4	#8	11"	8'-9	#7	11"	12'-0	#5	11"	9'-3	16	16'-9	#5	5½"	4'-6	3	#7	5½"	6'-0	4	1.157	125.59	3240
18'	9'-0	1'-5	3'-0	1'-5	4'-7	#9	11"	9'-6	#7	11"	13'-0	#5	11"	9'-3	17	17'-9	#5	5½"	4'-9	4	#7	5½"	6'-3	5	1.278	141.71	3480
19'	9'-6	1'-6	3'-2	1'-7	4'-9	#10	14"	10'-3	#8	14"	13'-3	#6	14"	10'-3	18	18'-9	#6	7"	5'-0	4	#8	7"	7'-3	6	1.434	157.51	3680
20'	10'-0	1'-7	3'-4	1'-8	5'-0	#10	13"	10'-6	#8	13"	14'-0	#6	13"	10'-9	19	19'-9	#6	6½"	5'-3	4	#8	6½"	7'-3	6	1.568	172.56	3880

CASE II - LEVEL FILL WITH 2' SURCHARGE

H	W	B	C	F	E	s1 Size	s1 Spacing	s1 Length	s2 Size	s2 Spacing	s2 Length	s3 Size	s3 Spacing	s3 Length	h Number ⊕	v Length	b Size	b Spacing	b Length	f1 Number ⊕	t Size	t Spacing	t Length	f2 Number ⊕	Concrete Cu. Yds. / Lin. Ft.	Steel Lbs. / Lin. Ft.	Max. Toe Press. Lbs. / Sq. Ft.
4'	3'-3	1'-3	1'-1	1'-0	1'-2	#5	12"	5'-9							3	3'-9	#5	12"	2'-6	2	#5	12"	2'-6	3	.342	21.23	1180
5'	3'-6	1'-3	1'-2	1'-0	1'-4	#5	12"	6'-9							4	4'-9	#5	12"	2'-6	2	#5	12"	2'-9	3	.387	23.65	1530
6'	4'-0	1'-3	1'-4	1'-0	1'-8	#5	12"	7'-9							5	5'-9	#5	12"	2'-9	2	#5	12"	3'-0	3	.444	26.32	1700
7'	4'-6	1'-3	1'-6	1'-0	2'-0	#5	12"	8'-9							6	6'-9	#5	12"	2'-9	3	#5	12"	3'-3	3	.502	29.41	1860
8'	5'-0	1'-3	1'-8	1'-0	2'-4	#5	9"	9'-9							7	7'-9	#5	12"	3'-0	3	#5	12"	3'-9	3	.559	35.74	2020
9'	5'-6	1'-3	1'-10	1'-0	2'-8	#5	14"	5'-3	#5	14"	11'-9				8	8'-9	#5	14"	3'-3	3	#6	14"	4'-0	4	.616	40.17	2170
10'	6'-0	1'-3	2'-0	1'-0	3'-0	#5	11"	5'-9	#5	11"	12'-9				9	9'-9	#5	11"	3'-3	3	#6	11"	4'-3	4	.673	49.75	2330
11'	6'-6	1'-3	2'-2	1'-0	3'-4	#7	12"	7'-3	#5	12"	13'-9				10	10'-9	#5	12"	3'-6	3	#6	9"	4'-9	4	.730	61.47	2480
12'	7'-0	1'-3	2'-4	1'-1	3'-7	#8	14"	7'-9	#6	14"	14'-9				11	11'-9	#6	14"	3'-9	3	#6	7"	5'-0	4	.806	74.69	2630
13'	7'-6	1'-3	2'-6	1'-2	3'-10	#8	12"	8'-0	#6	12"	15'-9				12	12'-9	#6	12"	4'-0	3	#6	6"	5'-3	4	.884	88.17	2780
14'	8'-0	1'-3	2'-8	1'-3	4'-1	#8	13"	8'-3	#7	13"	11'-0	#5	13"	7'-0	13	13'-9	#5	6½"	4'-3	3	#7	6½"	5'-9	4	.966	100.20	2940
15'	8'-6	1'-3	2'-10	1'-4	4'-4	#8	11"	8'-3	#7	11"	11'-3	#5	11"	7'-9	14	14'-9	#5	5½"	4'-6	3	#7	5½"	6'-0	4	1.051	118.53	3090
16'	9'-0	1'-5	3'-0	1'-5	4'-7	#9	11"	9'-6	#7	11"	12'-6	#5	11"	7'-9	15	15'-9	#5	5½"	4'-9	4	#7	5½"	6'-3	5	1.195	136.66	3340
17'	9'-6	1'-6	3'-2	1'-6	4'-10	#9	10"	9'-6	#7	10"	13'-0	#5	10"	8'-3	16	16'-9	#5	5"	5'-0	4	#7	5"	6'-9	5	1.318	153.76	3540
18'	10'-0	1'-7	3'-4	1'-8	5'-0	#9	12"	10'-0	#8	12"	13'-6	#6	12"	9'-3	17	17'-9	#6	6"	5'-3	4	#8	6"	7'-3	6	1.475	167.36	3750
19'	10'-6	1'-8	3'-6	1'-9	5'-3	#10	12"	11'-0	#8	12"	14'-6	#6	12"	9'-3	18	18'-9	#6	6"	5'-6	4	#8	6"	7'-6	6	1.613	186.56	3950
20'	11'-0	1'-9	3'-8	1'-10	5'-6	#10	11"	11'-6	#8	11"	15'-0	#6	11"	9'-9	19	19'-9	#6	5½"	5'-9	4	#8	5½"	7'-9	6	1.756	208.81	4150

CASE III - 2:1 SLOPING FILL

H	W	B	C	F	E	s1 Size	s1 Spacing	s1 Length	s2 Size	s2 Spacing	s2 Length	s3 Size	s3 Spacing	s3 Length	h Number ⊕	v Length	b Size	b Spacing	b Length	f1 Number ⊕	t Size	t Spacing	t Length	f2 Number ⊕	Concrete Cu. Yds. / Lin. Ft.	Steel Lbs. / Lin. Ft.	Max. Toe Press. Lbs. / Sq. Ft.
4'	2'-6	1'-3	0'-9	1'-0	0'-9	#5	12"	5'-9							3	3'-9	#5	12"	2'-0	2	#5	12"	2'-0	3	.307	20.19	1290
5'	3'-0	1'-3	0'-11	1'-0	1'-1	#5	12"	6'-9							4	4'-9	#5	12"	2'-3	2	#5	12"	2'-6	3	.364	23.13	1520
6'	3'-6	1'-3	1'-1	1'-0	1'-5	#5	12"	7'-9							5	5'-9	#5	12"	2'-6	2	#5	12"	2'-9	3	.421	25.80	1740
7'	4'-0	1'-3	1'-3	1'-0	1'-9	#5	12"	8'-9							6	6'-9	#5	12"	2'-6	2	#5	12"	3'-0	3	.478	28.22	1960
8'	4'-6	1'-3	1'-6	1'-0	2'-0	#5	12"	9'-9							7	7'-9	#5	12"	2'-9	3	#5	12"	3'-3	3	.536	31.57	2120
9'	5'-0	1'-3	1'-8	1'-0	2'-4	#5	9"	10'-9							8	8'-9	#5	12"	3'-0	3	#5	12"	3'-9	3	.593	38.24	2340
10'	5'-6	1'-3	1'-10	1'-0	2'-8	#5	14"	5'-9	#5	14"	12'-9				9	9'-9	#5	14"	3'-3	3	#6	14"	4'-0	4	.650	42.63	2560
11'	6'-0	1'-3	2'-0	1'-0	3'-0	#6	12"	6'-3	#5	12"	13'-9				10	10'-9	#5	12"	3'-3	3	#5	6"	4'-3	4	.707	55.13	2780
12'	6'-6	1'-3	2'-2	1'-0	3'-4	#7	11"	6'-9	#5	11"	14'-9				11	11'-9	#5	11"	3'-6	3	#5	5½"	4'-9	4	.764	66.89	3000
13'	7'-3	1'-3	2'-5	1'-1	3'-9	#8	14"	8'-0	#6	14"	15'-9				12	12'-9	#5	7"	3'-9	3	#7	7"	5'-6	4	.853	85.94	3030
14'	7'-9	1'-3	2'-7	1'-2	4'-0	#8	12"	8'-0	#6	12"	16'-9				13	13'-9	#5	6"	4'-0	3	#7	6"	5'-9	4	.933	100.85	3250
15'	8'-3	1'-5	2'-9	1'-3	4'-3	#8	12"	8'-3	#7	12"	11'-0	#5	12"	8'-3	14	14'-9	#5	6"	4'-3	3	#7	6"	6'-0	4	1.067	110.11	3590
16'	8'-9	1'-6	2'-11	1'-5	4'-5	#8	11"	8'-6	#7	11"	11'-6	#5	11"	8'-9	15	15'-9	#5	5½"	4'-9	3	#7	5½"	6'-3	5	1.208	124.42	3880
17'	9'-3	1'-7	3'-1	1'-6	4'-8	#9	13"	9'-3	#8	13"	12'-6	#6	13"	9'-3	16	16'-9	#6	6½"	5'-0	4	#8	6½"	7'-0	5	1.333	148.18	4160
18'	10'-0	1'-9	3'-4	1'-7	5'-1	#10	13"	10'-3	#8	13"	13'-0	#6	13"	9'-9	17	17'-9	#6	6½"	5'-3	4	#8	6½"	7'-6	6	1.509	166.74	4320
19'	10'-6	1'-11	3'-6	1'-9	5'-3	#10	12"	10'-9	#8	12"	13'-9	#6	12"	10'-3	18	18'-9	#6	6"	5'-6	4	#8	6"	7'-6	6	1.710	184.99	4670
20'	11'-3	2'-0	3'-9	1'-10	5'-8	#10	11"	11'-3	#8	11"	14'-3	#6	11"	10'-9	19	19'-9	#6	5½"	6'-0	4	#8	5½"	8'-0	6	1.877	209.38	4760

CASE IV - 1½:1 SLOPING FILL

H	W	B	C	F	E	s1 Size	s1 Spacing	s1 Length	s2 Size	s2 Spacing	s2 Length	s3 Size	s3 Spacing	s3 Length	h Number ⊕	v Length	b Size	b Spacing	b Length	f1 Number ⊕	t Size	t Spacing	t Length	f2 Number ⊕	Concrete Cu. Yds. / Lin. Ft.	Steel Lbs. / Lin. Ft.	Max. Toe Press. Lbs. / Sq. Ft.
4'	3'-0	1'-3	1'-0	1'-0	1'-0	#5	12"	5'-9							3	3'-9	#5	12"	2'-3	2	#5	12"	2'-3	3	.330	20.71	1520
5'	3'-9	1'-3	1'-3	1'-0	1'-6	#5	12"	6'-9							4	4'-9	#5	12"	2'-6	2	#5	12"	2'-9	3	.399	23.65	1720
6'	4'-6	1'-3	1'-6	1'-0	2'-0	#5	12"	7'-9							5	5'-9	#5	12"	2'-9	3	#5	12"	3'-3	3	.468	27.25	1920
7'	5'-0	1'-3	1'-8	1'-0	2'-4	#5	11"	8'-9							6	6'-9	#5	11"	3'-0	3	#5	11"	3'-6	3	.525	31.38	2290
8'	5'-9	1'-3	1'-11	1'-0	2'-10	#6	10½"	9'-9							7	7'-9	#5	10½"	3'-3	3	#5	10½"	4'-0	4	.593	41.19	2490
9'	6'-6	1'-3	2'-2	1'-0	3'-4	#6	11"	5'-9	#5	11"	11'-9				8	8'-9	#5	11"	3'-6	3	#6	11"	4'-6	4	.662	51.07	2680
10'	7'-3	1'-4	2'-5	1'-0	3'-10	#7	11"	6'-9	#5	11"	13'-0				9	9'-9	#6	11"	3'-9	3	#6	11"	5'-3	4	.753	62.62	2950
11'	8'-0	1'-5	2'-8	1'-1	4'-3	#8	12"	7'-3	#6	12"	14'-0				10	10'-9	#6	9"	4'-0	3	#6	9"	5'-6	4	.866	78.55	3220
12'	8'-9	1'-6	2'-11	1'-3	4'-7	#8	12"	7'-0	#7	12"	9'-6	#5	12"	6'-9	11	11'-9	#7	12"	4'-6	3	#7	9"	6'-3	5	1.005	92.31	3500
13'	9'-6	1'-7	3'-2	1'-4	5'-0	#9	12"	8'-0	#7	12"	10'-9	#5	12"	6'-9	12	12'-9	#7	9"	4'-9	4	#6	6"	6'-3	5	1.134	110.63	3770
14'	10'-3	1'-8	3'-5	1'-6	5'-4	#9	11"	8'-9	#7	11"	11'-3	#5	11"	7'-3	13	13'-9	#8	11"	5'-3	4	#6	5½"	6'-9	5	1.293	127.03	4040
15'	11'-0	1'-9	3'-8	1'-8	5'-8	#9	12"	9'-0	#8	12"	11'-6	#6	12"	8'-3	14	14'-9	#9	12"	5'-9	4	#7	6"	7'-6	6	1.463	149.51	4310
16'	11'-9	1'-10	3'-11	1'-9	6'-1	#10	12"	10'-0	#8	12"	12'-9	#6	12"	8'-3	15	15'-9	#7	6"	6'-0	4	#8	6"	8'-3	6	1.619	184.77	4590
17'	12'-6	2'-0	4'-2	1'-11	6'-5	#10	11"	10'-3	#8	11"	13'-3	#6	11"	8'-9	16	16'-9	#7	5½"	6'-6	4	#8	5½"	8'-6	6	1.847	207.39	4930
18'	13'-3	2'-1	4'-5	2'-1	6'-9	#10	10"	10'-9	#8	10"	14'-0	#6	10"	9'-3	17	17'-9	#7	5"	6'-9	4	#8	5"	9'-0	6	2.050	236.76	5200
19'	14'-0	2'-2	4'-8	2'-3	7'-1	#11	10"	11'-6	#8	10"	15'-0	#6	10"	9'-3	18	18'-9	#9	7½"	7'-3	5	#8	5"	9'-6	7	2.264	269.75	5480
20'	14'-9	2'-3	4'-11	2'-5	7'-5	#11	10"	11'-9	#9	10"	16'-0	#6	10"	9'-3	19	19'-9	#8	5"	7'-9	5	#8	5"	10'-0	7	2.488	303.11	5750

⊕ Total number of bars in cross-section

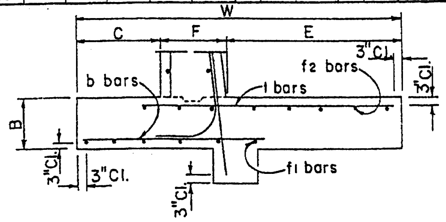

FOOTING STEEL DETAIL

NOTES:

See Standard RW-1 for all General Notes and Details.

All h, v, f1 and f2 bars shall be #4 bars spaced as shown.

DESIGN	DRAWN	CHECKED	NO.	DESCRIPTION OF REVISIONS	MADE BY	DATE
DHY	SFB	NAB				
10-72	3-73	3-73				
			①			
			②			
			③			

DESIGN APPROVED R.C. Brechler

APPROVED FOR DISTRIBUTION

STATE OF ARIZONA
DEPARTMENT OF TRANSPORTATION
DIVISION OF HIGHWAYS
STANDARD DRAWINGS

CANTILEVER RETAINING WALLS ON SPREAD FOOTINGS

REVISION

STANDARD NO. RW-2

DRAWING NO. B-18.02

CASE I – LEVEL FILL

DIMENSIONS						PILE PATTERN			STEEL LIST																		QUANTITIES	
									s1			s2			s3			h	v	b		t		p1	p2	p3	f3		
H	W	B	C	F	E	Type	Sp 1	Sp 2	Size	Spacing	Length	Size	Spacing	Length	Size	Spacing	Length	Number ✠	Length	Size	Spacing	Size	Spacing	Size	Size	Size	Number ✠	Concrete C.Y./Lin.Ft.	Reinforcing Steel Lbs./Lin.Ft.
4'	4'-0	2'-3	1'-3	1'-0	1'-9	1	8'-0		#5	12"	5'-6							3	3'-9	#5	12"	#5	12"			#6		.469	36.9
5'	4'-3	2'-3	1'-6	1'-0	1'-9	1	8'-0		#5	12"	6'-6							4	4'-9	#5	12"	#5	12"	#6*		#6		.524	44.1
6'	4'-6	2'-3	1'-6	1'-0	2'-0	1	8'-0		#5	12"	7'-6							5	5'-9	#5	12"	#5	12"	#6*		#6		.579	46.8
7'	4'-9	2'-3	1'-9	1'-0	2'-0	1	8'-0		#5	12"	8'-6							6	6'-9	#5	12"	#5	12"	#6*		#6		.634	49.5
8'	5'-0	2'-3	1'-9	1'-0	2'-3	1	8'-0		#5	12"	9'-6							7	7'-9	#5	12"	#5	12"	#6*		#6		.688	52.1
9'	5'-6	2'-3	2'-0	1'-0	2'-6	1	8'-0		#5	12"	10'-6							8	8'-9	#5	12"	#5	12"	#7		#6		.764	63.1
10'	5'-9	2'-3	2'-0	1'-0	2'-9	1	8'-0		#6	12"	11'-6							9	9'-9	#5	12"	#5	12"	#8		#6		.819	74.8
11'	6'-0	2'-3	2'-0	1'-0	3'-0	1	8'-0		#5	13"	5'-6	#5	13"	14'-6				10	10'-9	#5	13"	#5	13"	#8		#6	2	.874	78.9
12'	6'-6	2'-3	2'-3	1'-0	3'-3	1	7'-6		#6	12"	6'-6	#5	12"	15'-6				11	11'-9	#5	12"	#5	12"	#8		#6	2	.949	88.7
13'	6'-9	2'-3	2'-3	1'-0	3'-6	1	6'-6		#7	11"	7'-3	#5	11"	16'-6				12	12'-9	#5	11"	#5	11"	#8		#6	2	1.004	100.9
14'	7'-0	2'-3	2'-6	1'-1	3'-5	1	6'-0		#8	14"	7'-9	#6	14"	17'-6				13	13'-9	#5	7"	#6	14"	#8		#6	2	1.080	113.4
15'	7'-3	2'-3	2'-6	1'-2	3'-7	2	8'-0	16'-0	#8	12"	7'-9	#6	12"	18'-6				14	14'-9	#5	12"	#5	9"	#6		#6	2	1.160	110.3
16'	7'-6	2'-3	2'-6	1'-3	3'-9	2	8'-0	16'-0	#8	12"	7'-9	#7	12"	12'-0	#5	12"	8'-9	15	15'-9	#5	12"	#5	8"	#6		#6	4	1.242	120.4
17'	8'-0	2'-3	2'-9	1'-4	3'-11	2	8'-0	16'-0	#8	11"	8'-0	#7	11"	12'-6	#5	11"	9'-3	16	16'-9	#5	5½"	#5	5½"	#6		#6	4	1.349	144.8
18'	8'-9	2'-3	3'-0	1'-5	4'-4	2	8'-0	16'-0	#9	11"	10'-6	#7	11"	13'-6	#5	11"	9'-3	17	17'-9	#5	5½"	#6	5½"	#6		#6	4	1.479	175.5
19'	9'-3	2'-3	3'-3	1'-7	4'-5	2	7'-0	16'-0	#10	14"	11'-0	#8	14"	13'-9	#6	14"	10'-3	18	18'-9	#6	7"	#6	7"	#5		#6	6	1.621	180.1
20'	9'-6	2'-3	3'-3	1'-8	4'-7	2	6'-6	16'-0	#10	13"	11'-3	#8	13"	14'-3	#6	13"	10'-9	19	19'-9	#6	6½"	#6	6½"	#5		#6	6	1.718	195.5

CASE II – LEVEL FILL WITH 2' SURCHARGE

DIMENSIONS						PILE PATTERN			STEEL LIST																		QUANTITIES	
									s1			s2			s3			h	v	b		t		p1	p2	p3	f3		
H	W	B	C	F	E	Type	Sp 1	Sp 2	Size	Spacing	Length	Size	Spacing	Length	Size	Spacing	Length	Number ✠	Length	Size	Spacing	Size	Spacing	Size	Size	Size	Number ✠	Concrete C.Y./Lin.Ft.	Reinforcing Steel Lbs./Lin.Ft.
4'	4'-0	2'-3	1'-6	1'-0	1-6	1	8'-0		#5	12"	5'-6							3	3'-9	#5	12"	#5	12"			#6		.469	36.9
5'	4'-6	2'-3	1'-6	1'-0	2'-0	1	8'-0		#5	12"	6'-6							4	4'-9	#5	12"	#5	12"	#6*		#6		.545	44.6
6'	4'-9	2'-3	1'-9	1'-0	2'-0	1	8'-0		#5	12"	7'-6							5	5'-9	#5	12"	#5	12"	#6*		#6		.600	47.3
7'	5'-0	2'-3	1'-9	1'-0	2'-3	1	8'-0		#5	12"	8'-6							6	6'-9	#5	12"	#5	12"	#6*		#6		.654	50.0
8'	5'-6	2'-3	2'-0	1'-0	2'-6	1	8'-0		#5	9"	9'-6							7	7'-9	#5	12"	#5	12"	#7		#6		.730	64.2
9'	5'-9	2'-3	2'-0	1'-0	2'-9	1	8'-0		#5	14"	5'-0	#5	14"	12'-6				8	8'-9	#5	12"	#5	12"	#8		#6		.785	72.1
10'	6'-3	2'-3	2'-3	1'-0	3'-0	1	8'-0		#5	11"	5'-6	#5	11"	13'-6				9	9'-9	#5	12"	#5	12"	#8		#6	2	.860	81.5
11'	6'-6	2'-3	2'-3	1'-0	3'-3	1	7'-0		#7	12"	7'-0	#5	12"	14'-6				10	10'-9	#5	12"	#5	12"	#8		#6	2	.915	91.3
12'	7'-3	2'-3	2'-6	1'-1	3'-8	1	6'-6		#8	14"	7'-3	#6	14"	15'-6				11	11'-9	#5	7"	#6	14"	#8		#6	2	1.030	108.0
13'	7'-6	2'-3	2'-6	1'-2	3'-10	1	5'-6		#8	12"	7'-9	#6	12"	16'-6				12	12'-9	#5	6"	#5	8"	#8		#6	4	1.107	124.6
14'	8'-0	2'-3	2'-9	1'-3	4'-0	2	8'-0	16'-0	#8	13"	8'-0	#7	13"	11'-9	#5	13"	7'-0	13	13'-9	#6	13"	#5	6½"	#6		#6	4	1.207	119.1
15'	8'-6	2'-3	3'-0	1'-4	4'-2	2	8'-0	16'-0	#8	11"	8'-0	#7	11"	12'-0	#5	11"	7'-9	14	14'-9	#6	11"	#5	5½"	#6		#6	4	1.310	136.9
16'	8'-9	2'-3	3'-0	1'-5	4'-4	2	8'-0	16'-0	#9	12"	10'-6	#7	12"	13'-3	#5	12"	7'-6	15	15'-9	#6	9"	#6	6"	#6		#6	4	1.396	159.8
17'	9'-0	2'-3	3'-0	1'-6	4'-6	2	7'-3	16'-0	#9	11"	11'-0	#7	11"	14'-0	#5	11"	7'-9	16	16'-9	#7	11"	#6	5½"	#5		#6	4	1.485	173.8
18'	9'-3	2'-3	3'-3	1'-8	4'-4	2	6'-3	16'-0	#9	12"	11'-0	#8	12"	13'-9	#6	12"	9'-3	17	17'-9	#7	9"	#7	9"	#5		#6	6	1.604	184.4
19'	9'-9	2'-3	3'-4	1'-9	4'-8	2	5'-9	16'-0	#10	12"	12'-0	#8	12"	14'-9	#6	12"	9'-3	18	18'-9	#7	8"	#7	8"	#5		#6	6	1.721	211.4
20'	10'-0	2'-3	3'-6	1'-10	4'-8	2	5'-3	16'-0	#10	11"	12'-3	#8	11"	15'-3	#6	11"	9'-9	19	19'-9	#7	5½"	#6	5½"	#5		#6	6	1.821	242.3

CASE III – 2:1 SLOPING FILL

DIMENSIONS						PILE PATTERN			STEEL LIST																		QUANTITIES	
									s1			s2			s3			h	v	b		t		p1	p2	p3	f3		
H	W	B	C	F	E	Type	Sp 1	Sp 2	Size	Spacing	Length	Size	Spacing	Length	Size	Spacing	Length	Number ✠	Length	Size	Spacing	Size	Spacing	Size	Size	Size	Number ✠	Concrete C.Y./Lin.Ft.	Reinforcing Steel Lbs./Lin.Ft.
4'	4'-0	2'-3	1'-3	1'-0	1'-9	1	8'-0		#5	12"	5'-6							3	3'-9	#5	12"	#5	12"			#6		.469	36.9
5'	4'-3	2'-3	1'-6	1'-0	1'-9	1	8'-0		#5	12"	6'-6							4	4'-9	#5	12"	#5	12"	#6*		#6		.524	44.1
6'	4'-6	2'-3	1'-6	1'-0	2'-0	1	8'-0		#5	12"	7'-6							5	5'-9	#5	12"	#5	12"	#6*		#6		.579	46.8
7'	4'-9	2'-3	1'-9	1'-0	2'-0	1	8'-0		#5	12"	8'-6							6	6'-9	#5	12"	#5	12"	#6*		#6		.634	49.5
8'	5'-0	2'-3	1'-9	1'-0	2'-3	1	8'-0		#5	12"	9'-6							7	7'-9	#5	12"	#5	12"	#7		#6		.688	53.8
9'	5'-6	2'-3	2'-0	1'-0	2'-6	1	8'-0		#5	9"	10'-6							8	8'-9	#5	12"	#5	12"	#8		#6		.764	70.5
10'	5'-9	2'-3	2'-0	1'-0	2'-9	1	7'-0		#5	14"	5'-6	#5	14"	13'-6				9	9'-9	#5	12"	#5	12"	#8		#6		.819	74.8
11'	6'-0	2'-3	2'-0	1'-0	3'-0	1	6'-0		#6	12"	6'-0	#5	12"	14'-6				10	10'-9	#5	12"	#5	12"	#8		#6		.874	84.0
12'	6'-6	2'-3	2'-3	1'-0	3'-3	2	8'-0	16'-0	#7	11"	6'-6	#5	11"	15'-6				11	11'-9	#5	11"	#5	11"	#6		#7	2	.949	91.1
13'	6'-9	2'-3	2'-3	1'-1	3'-5	2	8'-0	16'-0	#8	14"	7'-6	#6	14"	16'-6				12	12'-9	#6	14"	#5	7"	#6		#7	2	1.024	104.0
14'	7'-0	2'-3	2'-6	1'-2	3'-4	2	8'-0	16'-0	#8	12"	7'-9	#6	12"	17'-6				13	13'-9	#6	12"	#6	12"	#6		#7	2	1.102	114.0
15'	7'-3	2'-3	2'-6	1'-3	3'-6	2	7'-6	16'-0	#8	12"	8'-0	#7	12"	11'-6	#5	12"	8'-3	14	14'-9	#6	12"	#6	9"	#6		#6	2	1.183	122.5
16'	7'-6	2'-3	2'-6	1'-5	3'-7	2	6'-9	16'-0	#8	11"	8'-3	#7	11"	12'-0	#5	11"	8'-9	15	15'-9	#6	11"	#7	11"	#6		#6	4	1.292	135.7
17'	8'-0	2'-3	2'-9	1'-6	3'-9	2	6'-0	16'-0	#9	13"	9'-9	#8	13"	12'-9	#6	13"	9'-3	16	16'-9	#6	8"	#6	8"	#6		#6	4	1.401	157.6
18'	9'-0	2'-3	3'-0	1'-7	4'-5	3	7'-6	16'-0	#10	13"	10'-9	#8	13"	13'-3	#6	13"	9'-9	17	17'-9	#6	8"	#7	8"	#6	#5	#6	4	1.556	186.2
19'	9'-3	2'-3	3'-3	1'-9	4'-3	3	7'-0	16'-0	#10	12"	11'-3	#8	12"	13'-9	#6	12"	10'-3	18	18'-9	#6	6"	#7	8"	#6	#5	#5	6	1.680	205.5
20'	9'-6	2'-3	3'-3	1'-10	4'-5	3	6'-0	16'-0	#10	11"	11'-9	#8	11"	14'-3	#6	11"	10'-9	19	19'-9	#6	5½"	#7	5½"	#6	#5	#5	6	1.779	236.9

* Top p1 bars Omitted

CASE IV – 1½:1 SLOPING FILL

DIMENSIONS						PILE PATTERN			STEEL LIST																		QUANTITIES	
									s1			s2			s3			h	v	b		t		p1	p2	p3	f3		
H	W	B	C	F	E	Type	Sp 1	Sp 2	Size	Spacing	Length	Size	Spacing	Length	Size	Spacing	Length	Number ✠	Length	Size	Spacing	Size	Spacing	Size	Size	Size	Number ✠	Concrete C.Y./Lin.Ft.	Reinforcing Steel Lbs./Lin.Ft.
4'	4'-0	2'-3	1'-6	1'-0	1'-6	1	8'-0		#5	12"	5'-6							3	3'-9	#5	12"	#5	12"			*7		.469	40.2
5'	4'-6	2'-3	1'-6	1'-0	2'-0	1	8'-0		#5	12"	6'-6							4	4'-9	#5	12"	#5	12"	#6*		#7		.545	47.9
6'	5'-0	2'-3	1'-9	1'-0	2'-3	1	8'-0		#5	12"	7'-6							5	5'-9	#5	12"	#5	12"	*7*		#7		.620	52.7
7'	5'-6	2'-3	2'-0	1'-0	2'-6	1	7'-6		#5	11"	8'-6							6	6'-9	#5	12"	#5	12"	*8		*7		.696	66.8
8'	6'-0	2'-3	2'-0	1'-0	3'-0	1	6'-0		#6	10"	9'-6							7	7'-9	#5	12"	#5	12"	*8		*7		.772	76.9
9'	6'-3	2'-3	2'-3	1'-0	3'-0	2	8'-0	16'-0	#6	11"	5'-6	#5	11"	12'-6				8	8'-9	#5	11"	#5	11"	*6		*7	2	.826	78.3
10'	6'-6	2'-3	2'-3	1'-0	3'-3	2	7'-6	16'-0	#7	11"	6'-6	#5	11"	13'-6				9	9'-9	#5	11"	#6	11"	*6		*7	2	.881	89.6
11'	6'-9	2'-3	2'-3	1'-1	3'-5	2	6'-0	16'-0	#8	12"	6'-9	#6	12"	14'-6				10	10'-9	#5	12"	#6	9"	#5		*7	2	.953	100.3
12'	7'-6	2'-3	2'-6	1'-3	3'-9	2	5'-0	16'-0	#8	12"	6'-6	#7	12"	10'-0	#5	12"	6'-9	11	11'-9	#6	12"	*6	8"	#5		*7	4	1.088	115.0
13'	8'-3	2'-3	2'-9	1'-4	4'-2	2	4'-6	16'-0	#9	12"	9'-0	#7	12"	11'-0	#5	12"	6'-9	12	12'-9	#6	9"	*6	6"	#5		*8	4	1.209	147.7
14'	8'-6	2'-3	2'-9	1'-6	4'-3	2	3'-6	16'-0	#9	11"	9'-6	#7	11"	11'-6	#5	11"	7'-3	13	13'-9	*5	5½"	*6	5½"	#5		*8	4	1.313	163.4
15'	9'-0	2'-3	3'-0	1'-8	4'-4	3	5'-0	16'-0	#9	12"	9'-9	#8	12"	11'-9	#6	12"	8'-3	14	14'-9	#7	9"	*8	9"	#5	#5	#6	4	1.445	176.4
16'	9'-6	2'-3	3'-3	1'-9	4'-6	3	4'-3	16'-0	#10	12"	10'-9	#8	12"	12'-9	#6	12"	8'-3	15	15'-9	*6	6"	#7	6"	#5	#5	#6	6	1.557	205.0
17'	10'-0	2'-3	3'-6	1'-11	4'-7	3	4'-0	16'-0	#10	11"	11'-0	#8	11"	13'-3	#6	11"	8'-9	16	16'-9	*6	5½"	*7	5½"	#5	#5	#6	6	1.699	227.7
18'	10'-6	2'-4	3'-6	2'-1	4'-11	3	3'-3	16'-0	#10	10"	11'-3	#8	10"	13'-9	#6	10"	9'-3	17	17'-9	*6	5"	*7	5"	#5	#5	*6	6	1.880	254.7
19'	10'-9	2'-6	3'-9	2'-3	4'-9	3	3'-0	15'-0	*11	10"	12'-0	*8	10"	15'-0	*6	10"	9'-3	18	18'-9	*7	5"	*7	5"	*5	*5	*5	8	2.080	292.3
20'	11'-6	2'-6	4'-0	2'-5	5'-1	3	3'-0	9'-0	*11	10"	12'-6	*9	10"	16'-0	*6	10"	9'-3	19	19'-9	*7	5"	*9	7½"	*5	*5	*5	8	2.269	327.8

✠ Total number of bars in the cross-section

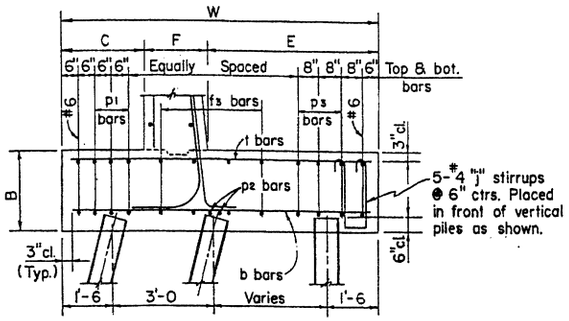

FOOTING STEEL DETAIL

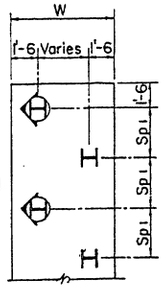

TYPE 1

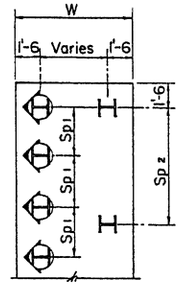

TYPE 2

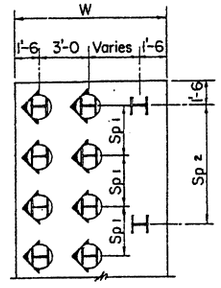

TYPE 3

Vertical Pile Battered Pile

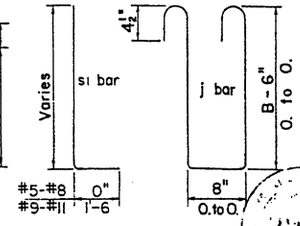

BENDS

NOTES:

All Piles shall be HP10x42 and Material shall conform to ASTM. A36.
Piling shall be driven to a minimum bearing of 55 tons.
Maximum shear resistance of each pile is assumed to be 20 kips.
If the soil immediately below the pile cap is unstable or poorly consolidated, The pile pattern shall be checked.
All h, v, and f3 bars shall be #4 spaced as shown.
See Std. RW-1 for General Notes and all other Details.
If pile splice is required, see Std. BM-1 (B-19.01) for Details.

DESIGN APPROVED	STATE OF ARIZONA DEPARTMENT OF TRANSPORTATION DIVISION OF HIGHWAYS STANDARD DRAWINGS	REVISION	
APPROVED FOR DISTRIBUTION	CANTILEVER RETAINING WALLS ON STEEL PILES	STANDARD NO. RW-3	DRAWING NO. B-18.03

DESIGN	DRAWN	CHECKED	DHT	6FB	NAB	1-73	1-73	3-73	NO.	DESCRIPTION OF REVISIONS	MADE BY	DATE
									①			
									②			
									③			

CASE I - LEVEL FILL

H	W	B	C	F	E	Pile Type	Sp1	Sp2	s1 Size	s1 Spacing	s1 Length	s2 Size	s2 Spacing	s2 Length	s3 Size	s3 Spacing	s3 Length	h Number⊕	v Length	b Size	b Spacing	t Size	t Spacing	p1 Size	p2 Size	p3 Size	f3 Number⊕	Concrete CY./Lin.Ft.	Reinforcing Steel Lbs./Lin.Ft.
4'	4'-0	2'-0	1'-3	1'-0	1'-9	1	8'-0		#5	12"	5'-6							3	3'-9	#5	12"	#5	12"			#6		.432	34.7
5'	4'-3	2'-0	1'-6	1'-0	1'-9	1	8'-0		#5	12"	6'-6							4	4'-9	#5	12"	#5	12"	#6*		#6		.485	41.9
6'	4'-6	2'-0	1'-6	1'-0	2'-0	1	8'-0		#5	12"	7'-6							5	5'-9	#5	12"	#5	12"	#6*		#6		.537	44.6
7'	4'-9	2'-0	1'-9	1'-0	2'-0	1	8'-0		#5	12"	8'-6							6	6'-9	#5	12"	#5	12"	#6*		#6		.590	47.3
8'	5'-0	2'-0	1'-9	1'-0	2'-3	1	8'-0		#5	12"	9'-6							7	7'-9	#5	12"	#5	12"	#6*		#6		.642	50.0
9'	5'-6	2'-0	2'-0	1'-0	2'-6	1	8'-0		#5	12"	10'-6							8	8'-9	#5	12"	#5	12"	#7		#6		.713	60.9
10'	5'-9	2'-0	2'-0	1'-0	2'-9	1	8'-0		#6	12"	11'-6							9	9'-9	#5	12"	#5	12"	#7		#6		.765	68.9
11'	6'-0	2'-0	2'-0	1'-0	3'-0	1	7'-0		#5	13"	5'-6	#5	13"	14'-6				10	10'-9	#5	13"	#5	13"	#7		#6	2	.818	72.9
12'	6'-6	2'-0	2'-3	1'-0	3'-3	1	6'-6		#6	12"	6'-6	#5	12"	15'-6				11	11'-9	#5	12"	#5	12"	#7		#6	2	.890	82.7
13'	6'-9	2'-0	2'-3	1'-0	3'-6	1	5'-6		#7	11"	7'-3	#5	11"	16'-6				12	12'-9	#6	11"	#6	11"	#6		#6	2	.941	97.5
14'	7'-0	2'-0	2'-6	1'-1	3'-5	1	5'-3		#8	14"	7'-9	#6	14"	17'-6				13	13'-9	#5	7"	#6	14"	#6		#6	2	1.015	103.4
15'	7'-3	2'-0	2'-6	1'-2	3'-7	2	8'-0	16'-0	#8	12"	7'-9	#6	12"	18'-6				14	14'-9	#5	12"	#6	12"	#5		#6	2	1.093	107.2
16'	7'-6	2'-0	2'-6	1'-3	3'-9	2	8'-0	16'-0	#8	12"	7'-9	#7	12"	12'-0	#5	12"	8'-9	15	15'-9	#5	9"	#6	9"	#5		#6	4	1.173	122.1
17'	8'-0	2'-0	2'-9	1'-4	3'-11	2	6'-9	16'-0	#8	11"	8'-0	#7	11"	12'-6	#5	11"	9'-3	16	16'-9	#6	11"	#7	11"	#5		#6	4	1.275	135.8
18'	8'-9	2'-0	3'-0	1'-5	4'-4	2	6'-0	16'-0	#9	11"	10'-6	#7	11"	13'-6	#5	11"	9'-3	17	17'-9	#5	5½"	#6	5½"	#5		#6	4	1.398	171.6
19'	9'-3	2'-0	3'-0	1'-7	4'-8	2	5'-3	16'-0	#10	14"	11'-0	#8	14"	13'-9	#6	14"	10'-3	18	18'-9	#6	7"	#7	7"	#5		#6	6	1.536	187.1
20'	9'-6	2'-0	3'-0	1'-8	4'-10	2	4'-9	16'-0	#10	13"	11'-3	#8	13"	14'-3	#6	13"	10'-9	19	19'-9	#6	6½"	#7	6½"	#5		#6	6	1.630	203.4

CASE II - LEVEL FILL WITH 2' SURCHARGE

H	W	B	C	F	E	Pile Type	Sp1	Sp2	s1 Size	s1 Spacing	s1 Length	s2 Size	s2 Spacing	s2 Length	s3 Size	s3 Spacing	s3 Length	h Number⊕	v Length	b Size	b Spacing	t Size	t Spacing	p1 Size	p2 Size	p3 Size	f3 Number⊕	Concrete CY./Lin.Ft.	Reinforcing Steel Lbs./Lin.Ft.
4'	4'-0	2'-0	1'-6	1'-0	1-6	1	8'-0		#5	12"	5'-6							3	3'-9	#5	12"	#5	12"			#6		.432	34.7
5'	4'-6	2'-0	1'-6	1'-0	2'-0	1	8'-0		#5	12"	6'-6							4	4'-9	#5	12"	#5	12"	#6*		#6		.503	42.4
6'	4'-9	2'-0	1'-9	1'-0	2'-0	1	8'-0		#5	12"	7'-6							5	5'-9	#5	12"	#5	12"	#6*		#6		.556	45.1
7'	5'-0	2'-0	1'-9	1'-0	2'-3	1	8'-0		#5	12"	8'-6							6	6'-9	#5	12"	#5	12"	#6*		#6		.608	47.8
8'	5'-6	2'-0	2'-0	1'-0	2'-6	1	8'-0		#5	9"	9'-6							7	7'-9	#5	12"	#5	12"	#7		#6		.679	62.1
9'	5'-9	2'-0	2'-0	1'-0	2'-9	1	7'-6		#5	14"	5'-0	#5	14"	12'-6				8	8'-9	#5	12"	#5	12"	#7		#6		.732	66.1
10'	6'-3	2'-0	2'-3	1'-0	3'-0	1	7'-0		#5	11"	5'-6	#5	11"	13'-6				9	9'-9	#5	11"	#5	11"	#7		#6	2	.803	76.7
11'	6'-6	2'-0	2'-3	1'-0	3'-3	1	6'-0		#7	12"	7'-0	#5	12"	14'-6				10	10'-9	#5	9"	#5	9"	#7		#6	2	.855	89.2
12'	7'-3	2'-0	2'-6	1'-1	3'-8	1	5'-3		#8	14"	7'-3	#6	14"	15'-6				11	11'-9	#5	7"	#5	7"	#6		#6	2	.963	101.6
13'	7'-6	2'-0	2'-6	1'-2	3'-10	1	4'-6		#8	12"	7'-9	#6	12"	16'-6				12	12'-9	#5	6"	#6	9"	#6		#6	4	1.037	117.5
14'	8'-0	2'-0	2'-9	1'-3	4'-0	2	8'-0	16'-0	#8	13"	8'-0	#7	13"	11'-9	#5	13"	7'-0	13	13'-9	#6	13"	#6	6½"	#5		#6	4	1.133	121.6
15'	8'-6	2'-0	2'-9	1'-4	4'-5	2	7'-0	16'-0	#8	11"	8'-0	#7	11"	12'-0	#5	11"	7'-9	14	14'-9	#6	11"	#6	5½"	#5		#6	4	1.232	141.1
16'	8'-9	2'-0	3'-0	1'-5	4'-4	2	6'-0	16'-0	#9	12"	10'-6	#7	12"	13'-3	#5	12"	7'-6	15	15'-9	#6	9"	#7	9"	#5		#6	4	1.315	153.6
17'	9'-0	2'-0	3'-0	1'-6	4'-6	2	5'-6	16'-0	#9	11"	11'-0	#7	11"	14'-0	#5	11"	7'-9	16	16'-9	#7	11"	#8	11"	#5		#6	4	1.401	169.6
18'	9'-3	2'-0	3'-3	1'-8	4'-4	2	5'-0	16'-0	#9	12"	11'-0	#8	12"	13'-9	#6	12"	9'-3	17	17'-9	#7	8"	#7	8"	#5		#6	6	1.519	189.2
19'	9'-6	2'-0	3'-3	1'-9	4'-6	2	4'-6	16'-0	#10	12"	12'-0	#8	12"	14'-9	#6	12"	9'-3	18	18'-9	#7	8"	#8	9"	#5		#6	6	1.613	212.5
20'	10'-0	2'-0	3'-6	1'-10	4'-8	2	4'-3	16'-0	#10	11"	12'-3	#8	11"	15'-3	#6	11"	9'-9	19	19'-9	#7	5½"	#7	5½"	#5		#6	6	1.728	252.4

CASE III - 2:1 SLOPING FILL

H	W	B	C	F	E	Pile Type	Sp1	Sp2	s1 Size	s1 Spacing	s1 Length	s2 Size	s2 Spacing	s2 Length	s3 Size	s3 Spacing	s3 Length	h Number⊕	v Length	b Size	b Spacing	t Size	t Spacing	p1 Size	p2 Size	p3 Size	f3 Number⊕	Concrete CY./Lin.Ft.	Reinforcing Steel Lbs./Lin.Ft.
4'	4'-0	2'-0	1'-3	1'-0	1'-9	1	8'-0		#5	12"	5'-6							3	3'-9	#5	12"	#5	12"			#6		.432	34.7
5'	4'-3	2'-0	1'-6	1'-0	1'-9	1	8'-0		#5	12"	6'-6							4	4'-9	#5	12"	#5	12"	#6*		#6		.485	41.9
6'	4'-6	2'-0	1'-6	1'-0	2'-0	1	8'-0		#5	12"	7'-6							5	5'-9	#5	12"	#5	12"	#6*		#6		.537	44.6
7'	4'-9	2'-0	1'-9	1'-0	2'-0	1	8'-0		#5	12"	8'-6							6	6'-9	#5	12"	#5	12"	#6*		#6		.590	47.3
8'	5'-0	2'-0	1'-9	1'-0	2'-3	1	8'-0		#5	12"	9'-6							7	7'-9	#5	12"	#5	12"	#7*		#6		.642	51.6
9'	5'-6	2'-0	2'-0	1'-0	2'-6	1	7'-6		#5	9"	10'-6							8	8'-9	#5	12"	#5	12"	#7		#6		.713	64.6
10'	5'-9	2'-0	2'-0	1'-0	2'-9	1	6'-0		#5	14"	5'-6	#5	14"	13'-6				9	9'-9	#5	12"	#5	12"	#7		#6		.765	68.6
11'	6'-0	2'-0	2'-0	1'-0	3'-0	1	5'-0		#6	12"	6'-0	#5	12"	14'-6				10	10'-9	#5	12"	#5	12"	#6		#6		.818	74.1
12'	6'-6	2'-0	2'-3	1'-0	3'-3	2	8'-0	16'-0	#7	11"	6'-6	#5	11"	15'-6				11	11'-9	#5	11"	#6	11"	#6		#7	2	.890	93.0
13'	6'-9	2'-0	2'-3	1'-1	3'-5	2	8'-0	16'-0	#8	14"	7'-6	#6	14"	16'-6				12	12'-9	#6	14"	#5	7"	#6		#7	2	.961	102.9
14'	7'-0	2'-0	2'-6	1'-2	3'-4	2	7'-6	16'-0	#8	12"	7'-9	#6	12"	17'-6				13	13'-9	#6	12"	#5	6"	#6		#7	2	1.037	116.7
15'	7'-3	2'-0	2'-6	1'-3	3'-6	2	6'-3	16'-0	#8	12"	8'-0	#7	12"	11'-6	#5	12"	8'-3	14	14'-9	#6	12"	#5	6"	#5		#6	2	1.116	119.2
16'	7'-6	2'-0	2'-6	1'-5	3'-7	2	5'-3	16'-0	#8	11"	8'-3	#7	11"	12'-0	#5	11"	8'-9	15	15'-9	#6	11"	#7	11"	#5		#6	4	1.222	131.8
17'	8'-0	2'-0	2'-9	1'-6	3'-9	2	4'-6	16'-0	#9	13"	9'-9	#8	13"	12'-9	#6	13"	9'-3	16	16'-9	#7	10"	#7	10"	#5		#6	4	1.327	156.7
18'	9'-0	2'-0	3'-0	1'-7	4'-5	3	6'-0	16'-0	#10	13"	10'-9	#8	13"	13'-3	#6	13"	9'-9	17	17'-9	#6	6½"	#7	6½"	#5	#5	#6	4	1.472	192.8
19'	9'-3	2'-0	3'-3	1'-9	4'-3	3	6'-0	16'-0	#10	12"	11'-3	#8	12"	13'-9	#6	12"	10'-3	18	18'-9	#6	6"	#7	6"	#5	#5	#6	6	1.594	213.3
20'	10'-0	2'-0	3'-6	1'-10	4'-8	3	5'-9	16'-0	#10	11"	11'-9	#8	11"	14'-3	#6	11"	10'-9	19	19'-9	#6	5½"	#7	5½"	#5	#5	#6	6	1.728	239.6

* Top p1 bars Omitted

CASE IV - 1½:1 SLOPING FILL

H	W	B	C	F	E	Pile Type	Sp1	Sp2	s1 Size	s1 Spacing	s1 Length	s2 Size	s2 Spacing	s2 Length	s3 Size	s3 Spacing	s3 Length	h Number⊕	v Length	b Size	b Spacing	t Size	t Spacing	p1 Size	p2 Size	p3 Size	f3 Number⊕	Concrete CY./Lin.Ft.	Reinforcing Steel Lbs./Lin.Ft.
4'	4'-0	2'-0	1'-6	1'-0	1'-6	1	8'-0		#5	12"	5'-6							3	3'-9	#5	12"	#5	12"			#6		.432	34.7
5'	4'-6	2'-0	1'-6	1'-0	2'-0	1	8'-0		#5	12"	6'-6							4	4'-9	#5	12"	#5	12"	#6*		#7		.503	45.7
6'	5'-0	2'-0	1'-9	1'-0	2'-3	1	8'-0		#5	12"	7'-6							5	5'-9	#5	12"	#5	12"	#6*		#7		.574	48.9
7'	5'-6	2'-0	2'-0	1'-0	2'-6	1	6'-0		#5	11"	8'-6							6	6'-9	#5	12"	#5	12"	#6		#6		.645	54.2
8'	6'-0	2'-0	2'-0	1'-0	3'-0	1	4'-9		#6	10"	9'-6							7	7'-9	#5	12"	#5	12"	#6		#6		.716	63.8
9'	6'-3	2'-0	2'-0	1'-0	3'-3	2	7'-0	16'-0	#6	11"	5'-6	#5	11"	12'-6				8	8'-9	#5	11"	#5	11"	#5		#7	2	.769	74.4
10'	6'-6	2'-0	2'-3	1'-0	3'-3	2	5'-9	16'-0	#7	11"	6'-6	#5	11"	13'-6				9	9'-9	#5	11"	#6	11"	#5		#7	2	.821	85.7
11'	7'-0	2'-0	2'-6	1'-1	3'-5	2	4'-9	16'-0	#8	12"	6'-9	#6	12"	14'-6				10	10'-9	#5	9"	#6	9"	#5		#7	2	.909	102.2
12'	7'-6	2'-0	2'-6	1'-3	3'-9	2	4'-0	16'-0	#8	12"	6'-6	#7	12"	10'-0	#5	12"	6'-9	11	11'-9	#6	9"	#7	9"	#5		#8	4	1.019	124.5
13'	8'-3	2'-0	2'-6	1'-4	4'-5	2	3'-3	16'-0	#9	12"	9'-0	#7	12"	11'-0	#5	12"	6'-9	12	12'-9	#6	9"	#8	9"	#5		#8	4	1.133	150.9
14'	8'-6	2'-0	2'-9	1'-6	4'-3	2	3'-0	6'-0	#9	11"	9'-6	#7	11"	11'-6	#5	11"	7'-3	13	13'-9	#7	9"	#8	9"	#5		#6	4	1.235	161.2
15'	9'-0	2'-0	3'-0	1'-8	4'-4	3	3'-9	16'-0	#9	12"	9'-9	#8	12"	11'-9	#6	12"	8'-3	14	14'-9	#7	9"	#7	6"	#5	#5	#6	4	1.361	179.8
16'	9'-3	2'-0	3'-3	1'-9	4'-3	3	3'-6	16'-0	#10	12"	10'-9	#8	12"	12'-9	#6	12"	8'-3	15	15'-9	#8	9"	#7	6"	#5	#5	#6	6	1.451	207.0
17'	9'-9	2'-0	3'-3	1'-11	4'-7	3	3'-0	16'-0	#10	11"	11'-0	#8	11"	13'-3	#6	11"	8'-9	16	16'-9	#8	8"	#9	8"	#5	#5	#6	6	1.588	237.3
18'	10'-3	2'-1	3'-6	2'-1	4'-8	3	3'-0	7'-0	#10	10"	11'-3	#8	10"	13'-9	#6	10"	9'-3	17	17'-9	#8	6"	#8	6"	#5	#5	#5	6	1.763	269.8

⊕ Total number of bars in the cross-section.

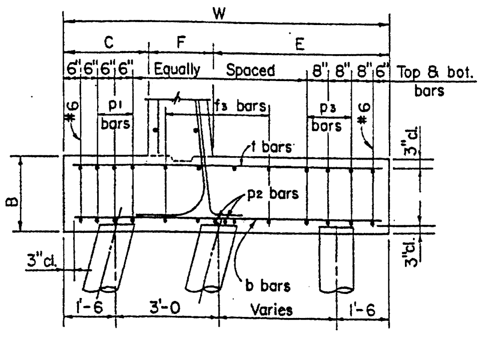

FOOTING STEEL DETAIL

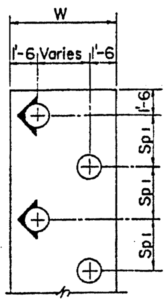

TYPE 1

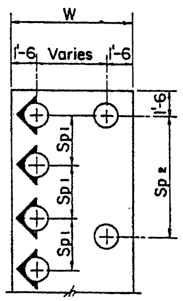

TYPE 2

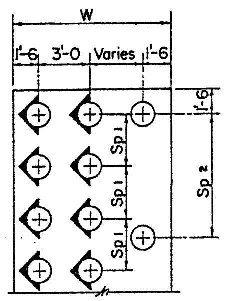

TYPE 3

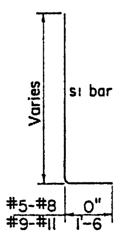

BEND

⊕ Vertical Pile ⊕ Battered Pile

NOTES:

All Piles shall be 14"ϕ Cast-in-place or Precast Concrete, see Std. CP-1. Piling shall be driven to a minimum bearing of 45 tons.

Maximum shear resistance of each pile is assumed to be 15 kips. If the soil immediately below the pile cap is unstable or poorly consolidated, The pile pattern shall be checked.

All h, v, and f3 bars shall be #4 spaced as shown.

See Std. RW-1 for General Notes and all other Details.

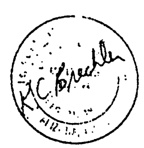

DESIGN APPROVED	STATE OF ARIZONA DEPARTMENT OF TRANSPORTATION DIVISION OF HIGHWAYS STANDARD DRAWINGS	REVISION
R.C. Brechler		
APPROVED FOR DISTRIBUTION	CANTILEVER RETAINING WALLS ON CONCRETE PILES	STANDARD NO. RW-4
[signature]		DRAWING NO. B-18.04

DESIGN	DRAWN	CHECKED
DHY	RDS	NAB
1-73	2-73	3-73

NO.	DESCRIPTION OF REVISIONS	MADE BY	DATE
1			
2			
3			

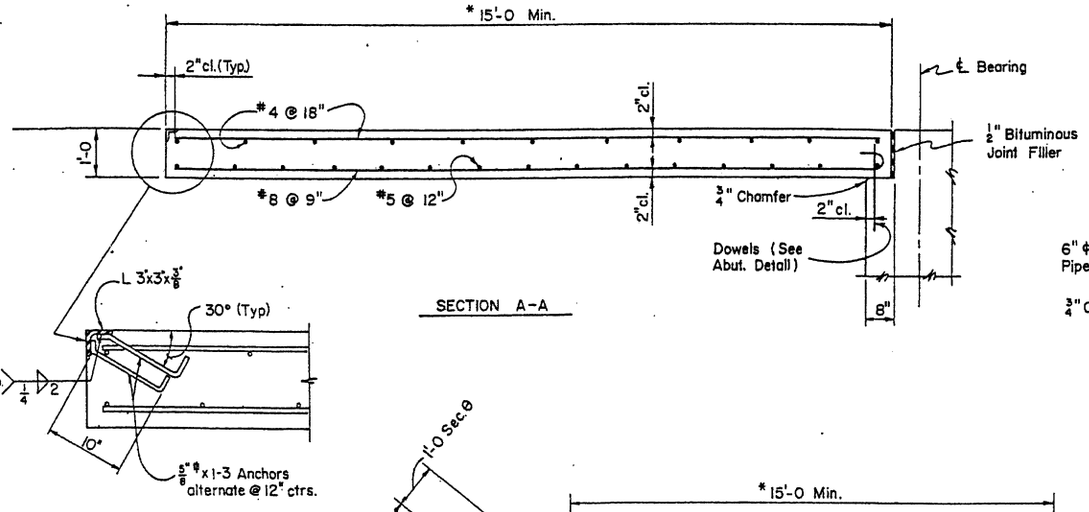

SECTION A-A

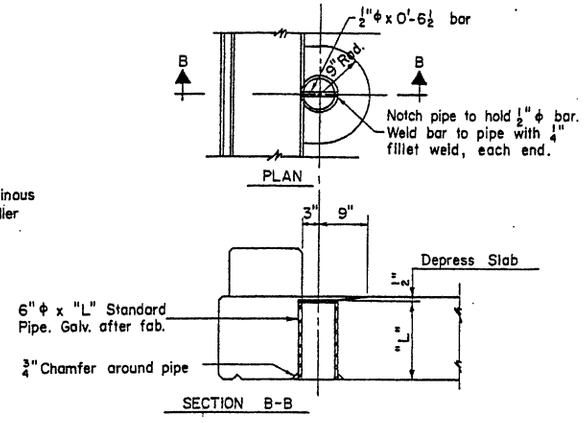

SECTION B-B

ROADWAY DRAIN DETAIL

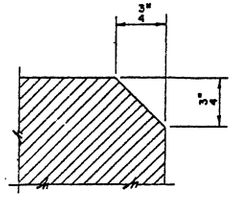

Chamfer all exposed corners thus unless otherwise noted. This note applicable to all sheets pertaining to the structure.

CHAMFER DETAIL

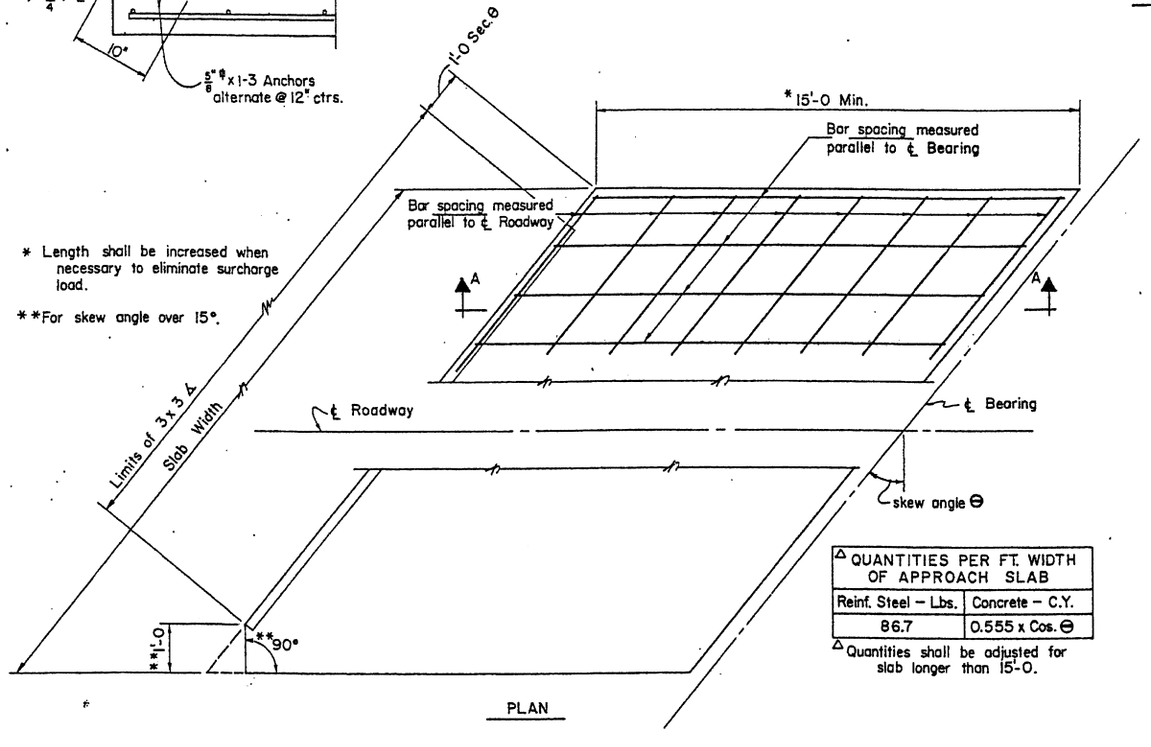

* Length shall be increased when necessary to eliminate surcharge load.

**For skew angle over 15°.

PLAN

APPROACH SLAB

△ QUANTITIES PER FT. WIDTH OF APPROACH SLAB	
Reinf. Steel – Lbs.	Concrete – C.Y.
86.7	0.555 x Cos. θ

△ Quantities shall be adjusted for slab longer than 15'-0.

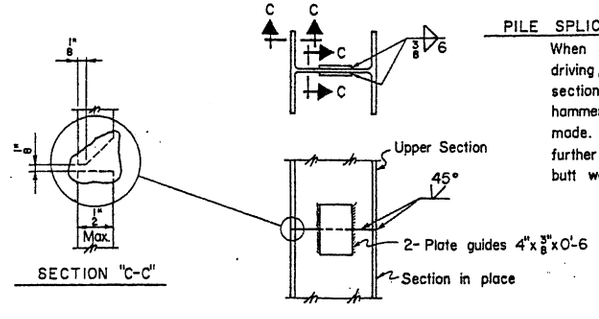

PILE SPLICE DETAIL

PILE SPLICE NOTE

When piling is to be spliced for further driving, upper section shall be lowered on section in place and tapped lightly with hammer to full bearing before butt welds are made. When piling is to be extended without further driving, omit guide plates and make butt welds continuous across web.

GENERAL NOTES

Concrete shall be class "A".
Reinforcing steel shall conform to A.S.T.M. Specifications A615, grade 40.
Welding shall conform to American Welding Society Specifications For Structural Welding, latest edition.
Roadway drains shall conform to A.S.T.M. Specifications A53, type S, grade "B". Galvanize after fabrication in accordance with A.S.T.M. Specifications A123.

NOTES

Structural steel shall conform to ASTM Specification A36.
Paint and painting shall conform to Std. Specifications. Contact surfaces shall not be painted. Structural steel - Shop - 1 coat paint #1A or #1B, #3 and #10. No field paint required.

DESIGN	JBS	2-73	NO.	DESCRIPTION OF REVISIONS	MADE BY	DATE
DRAWN	RDS	3-73	1	Added Struct. steel & painting note	J T W	7-76
CHECKED	HAB, DHY	3-73	2			
			3			

DESIGN APPROVED	STATE OF ARIZONA DEPARTMENT OF TRANSPORTATION DIVISION OF HIGHWAYS STANDARD DRAWINGS	REVISION 7-76
APPROVED FOR DISTRIBUTION	MISCELLANEOUS DETAILS FOR BRIDGES	STANDARD NO. BM-1
		DRAWING NO. B-19.01

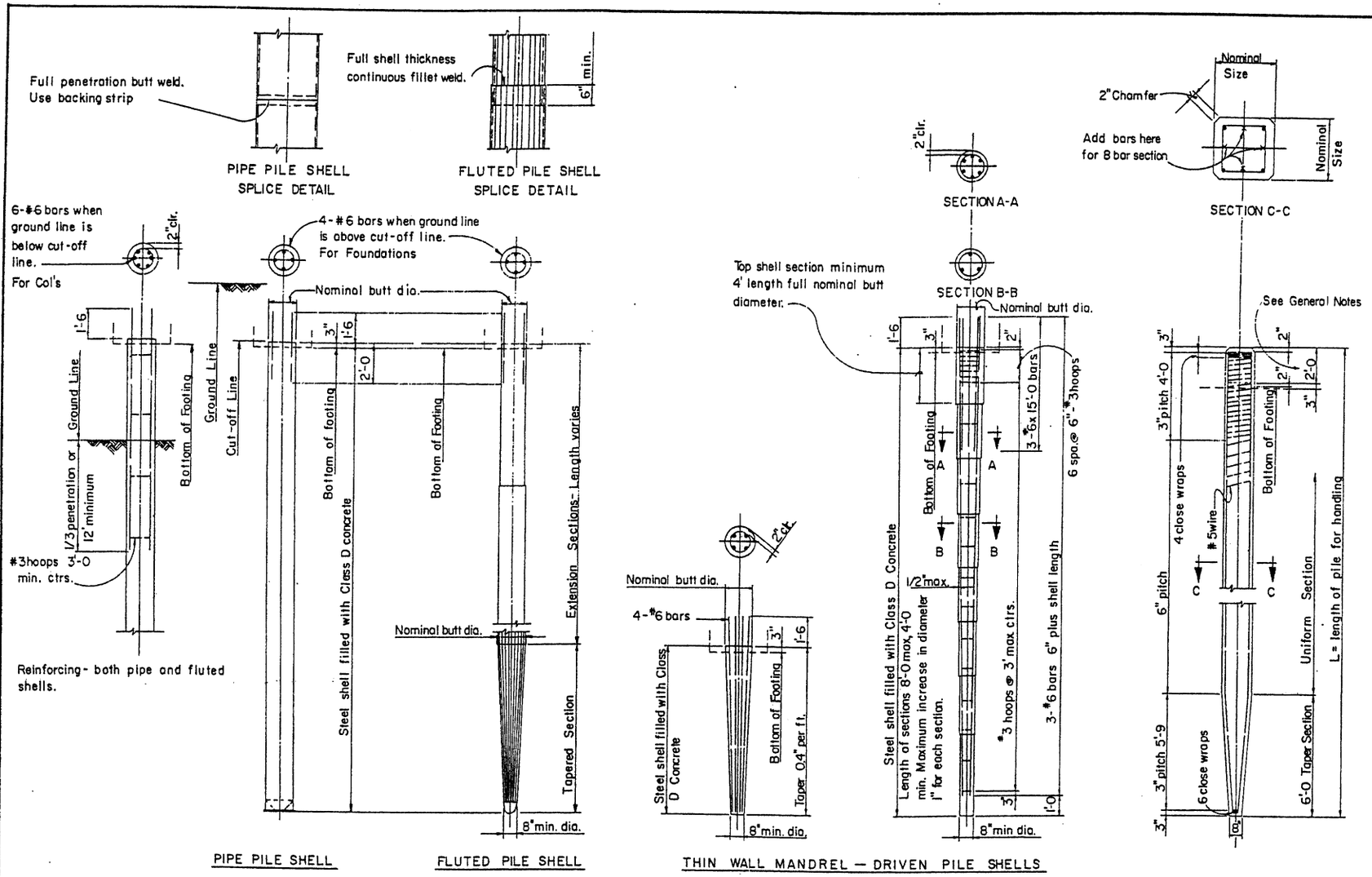

GENERAL NOTES

PRECAST AND CAST-IN-PLACE PILES

Design - AASHO Standard Specifications for Highway Bridges 1973.

Construction - Arizona Highway Department Standard Specification 1969, revised to date.

Reinforcing Steel shall conform to ASTM Spec. A615 Grade 40.

Spiral reinforcing shall be cold drawn wire conforming to ASTM Spec. A82.

PRECAST PILES

Precast piles shall be cast 2'-0 longer than net required length, or approved driving head provided. After driving to a depth satisfactory to the Engineer, the excess length shall be trimmed off to 3" above the bottom of the footing and the pile edges beveled. Vertical reinforcement shall be cut off to provide 1'-6 embedment. If extended pile is to be driven further, the longitudinal steel shall be lapped 40 diameters for the splice. Concrete for precast piles shall be Class A-A, internally vibrated.

CAST-IN-PLACE PILES

Contractor shall be responsible for furnishing shells and waterproof end closure of sufficient strength to drive without distortion, damage or leakage. Type of end closure shall be chosen by contractor to suit driving conditions, and shall not exceed shell diameter plus 1/2". Shells shall be driven only with manufacturer's standard driving head and, if necessary, with a driving mandrel.

Mill inspection of all shells shall conform to current Standard Specifications.

All shells shall be filled to cut off elevation with Class D concrete internally vibrated.

Trestle bent piles shall have a minimum butt diameter of 14".

All pile material shall be new or unused.

PRECAST PILE PICK-UP NOTE: Pick-up points shall be plainly marked on all piles after removal of forms unless special lifting devices are attached for pick-up and all lifting shall be done at these points.

The use of special embedded or attached lifting devices, the employment of other pick-up points or any other method of pick-up shall be subject to approval by the Engineer.

CAST - IN - PLACE CONCRETE PILES

CAST - IN - PLACE PILES

Type of shell	Min. shell thickness	Pile Shell Specifications
Pipe	.164 in.	ASTM A252 - 50,000 psi min. Ult.
Fluted	9 guage	SAE 1010 or 1015 - 50,000 psi min. Ult.
Mandrel Driven	18 guage	Manufacturer's standard sheet steel.

PRECAST CONCRETE PILES

PRECAST CONCRETE PILES

Pile Size	No. of Bars & Size	Approx. Wt. per Lin. Ft.	Area of nominal cross-sect	Max. Length L for 1 point pick-up	Max. Length L for 2 point pick-up
14"	4 - #8	205#	196 □"	44'	66'
16"	4 - #9	265	256	46	70
18"	8 - #7	335	324	49	74

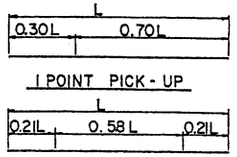

NO.	DESCRIPTION OF REVISIONS	MADE BY	DATE
1			
2			
3			

DESIGN
DRAWN CAG 1-73
CHECKED WO 3-73

DESIGN APPROVED K.C. Brechler

APPROVED FOR DISTRIBUTION R. Stanelin

STATE OF ARIZONA
DEPARTMENT OF TRANSPORTATION
DIVISION OF HIGHWAYS
STANDARD DRAWINGS

PRECAST AND CAST-IN-PLACE CONCRETE PILES

REVISION

STANDARD NO. CP-1

DRAWING NO. B-20.01

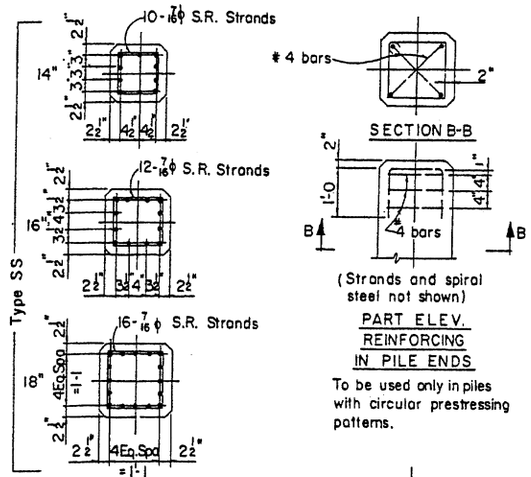

SECTIONS A-A

PART ELEV.
REINFORCING
IN PILE ENDS

To be used only in piles with circular prestressing patterns.

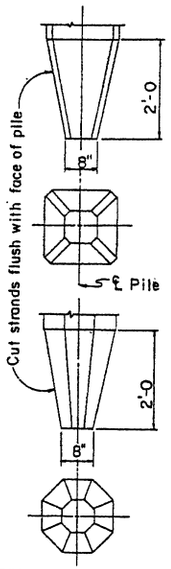

ALTERNATE PILE TIPS

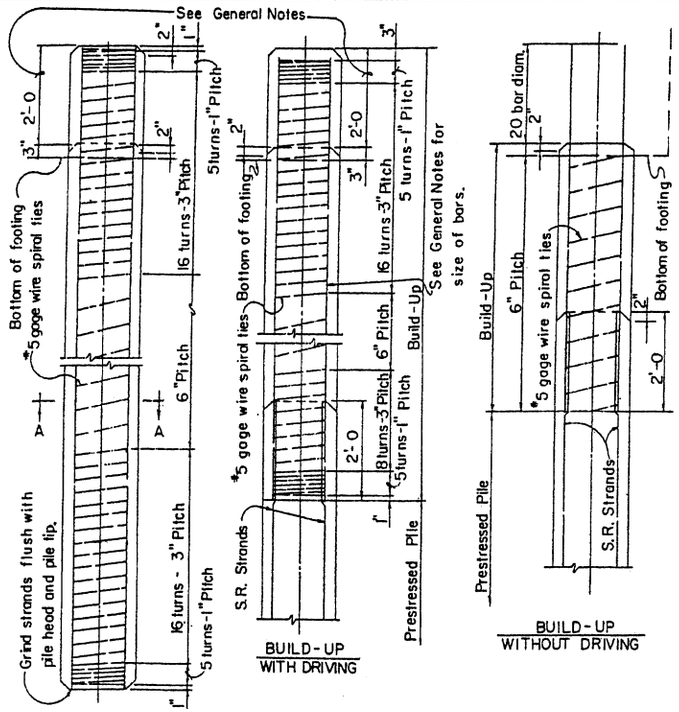

ELEVATION

GENERAL NOTES

DESIGN - AASHO Standard Specifications For Highway Bridges 1973.

CONSTRUCTION - Standard Specifications of the Arizona Highway Department Edition 1969. All construction Specifications for precast concrete piling shall apply except as otherwise noted here.

CONCRETE - Concrete in the prestressed pile shall be Class S and shall have a minimum compressive cylinder strength ($f'c$) of 5000 psi at 28 days. Compressive cylinder strength at transfer of prestressing force shall be not less than 4000 psi. Piles may be removed from casting bed to nearby storage anytime after transfer of stress. Shipment from plant site or driving will not be permitted until full compressive cylinder strength is reached. Concrete in Build-Ups shall be Class A-A internally vibrated having a minimum compressive cylinder strength ($f'c$) of 2800 psi at 28 days. Build-Ups with driving shall have reached full compressive cylinder strength before driving starts.

MILD STEEL REINFORCING - Spiral reinforcement shall be cold drawn wire conforming to ASTM, A-82. All other mild reinforcement shall be in accordance with ASTM, A-615 Grade 40.

PRESTRESSING REINFORCING - Seven-wire stress relieved strand conforming to the requirements of ASTM, A-416 shall be used. In general the unit prestress after losses shall not exceed $0.2f'c$. Initial tension in strands before release shall be as follows:

3/8"φ Strands - 14,000#
7/16"φ Strands - 18,900#
1/2"φ Strands - 25,200#

The unit prestress after losses shall be not less than 700 psi.

TOLERANCES - Pile ends shall be plane surfaces and perpendicular to axis of pile. The maximum sweep (deviation from straightness measured along two perpendicular faces of the pile, while not subject to bending forces) shall not exceed 1/8" in any 10' of its length, 3/8" in any 40' or 3/16" x (total length in ft.) ÷ 20 feet.

BUILD-UPS - Build-ups as detailed may be used only if specified or authorized by the Engineer. Attachment of the build-up to the pile shall be by the same methods given for pile heads except that edges need not be beveled. If the joint is subject to conditions which would cause deterioration, suitable steps satisfactory to the Engineer shall be taken to protect the joint. The minimum area of vertical reinforcing steel shall be 1-1/2% of the gross cross-section of concrete. Bars shall be placed in a symmetrical pattern of not less than four bars.

PILE HEADS - Prestressed piles shall be cast 2'-0 longer than net required length. After driving to a depth satisfactory to the Engineer the excess length shall be cut off on a plane normal to the axis of the pile and the pile edges beveled. Prestressing strands shall be cut off to provide 2'-0 embedment into cap, footing or build-up. Any concrete at the pile head damaged below cut off elevation in driving shall be removed to solid material and built-up to cut off elevation. If the pile head is a built-up section, it shall be trimmed same as a pre-stressed section and the vertical bars cut off to provide 20 diameters embedment into the cap or footing.

FORMS - The use of steel forms on concrete founded casting beds is required unless otherwise approved in advance by the Engineer. Outer forms shall enclose all except top horizontal surface. The side forms may have a maximum draft on each side not exceeding 1/4" per foot. All corners shall be chamfered to 1-1/2" or rounded to 2" radius. Forms for piles shall be such as to avoid the formation of fins at intersection of surfaces. Top of concrete casting shall be given a uniformly smooth finish to match the finish surface of the formed sides.

PILE PICK-UP NOTE: Pick-up points shall be plainly marked on all piles after removal of the forms unless special lifting devices are attached for pick-up and all lifting shall be done at these points.

The use of special embedded or attached lifting devices, the employment of other pick-up points or any other method of pick-up shall be subject to approval by the Engineer.

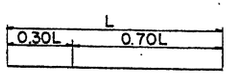

1 POINT PICK-UP

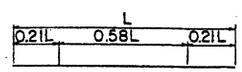

2 POINT PICK-UP

SQUARE PILE PROPERTIES											
Pile Size	No. and size of S.R. Strands		Unit Prestress after losses		Approx. Wt. per Lin. Ft.	Area of nominal cross-section	Section modulus of cross-section	Max. Lgth "L"* 1 Point Pick-Up		Max Lgth "L"* 2 Point Pick-Up	
	Square Pattern	Circular Pattern	Square Pattern	Circular Pattern				Square Pattern	Circular Pattern	Square Pattern	Circular Pattern
14	10-7/16φ	10-7/16φ	771psi	771psi	205#	196□"	457in³	57'	57'	82'	82'
16	12-7/16φ	12-7/16φ	709	709	265	256	683	60	60	85	85
18	16-7/16φ	15-7/16φ	747	700	335	324	972	64	63	92	90

*The length "L" is the distance end to end of pile including alternate pile tip used. Tabulated lengths may be used for minimum pick-up lengths when the concrete has attained a compressive cylinder strength of 5,000 psi. If piles are picked up when the concrete strength is less than 5,000 psi, the maximum pick-up length shall be the tabulated length reduced by 3%.

OCTAGON PILE PROPERTIES							
Pile Size	No. & size of S.R. Strands	Unit Pre-stress after losses	Approx. Wt. per Lin. Ft.	Area of nominal cross sect.	Section modulus of cross sect.	Max. lgth "L" * 1 point pick-up	Max. lgth "L" * 2 point pick-up
14	8-7/16φ	747psi	170#	162 □"	301 in³	50'	72'
16	11-7/16φ	785	220	212	449	55	78
18	13-7/16φ	733	280	268	639	57	81

DESIGN APPROVED R.C. Brechler	STATE OF ARIZONA DEPARTMENT OF TRANSPORTATION DIVISION OF HIGHWAYS STANDARD DRAWINGS	REVISION	
APPROVED FOR DISTRIBUTION F. Hamilton	PRESTRESSED CONCRETE PILES	STANDARD NO. CP-2	DRAWING NO. B-20.02

NO.	DESCRIPTION OF REVISIONS	MADE BY	DATE
1			
2			
3			

DESIGN
DRAWN CAG 1-73
CHECKED WO 3-73

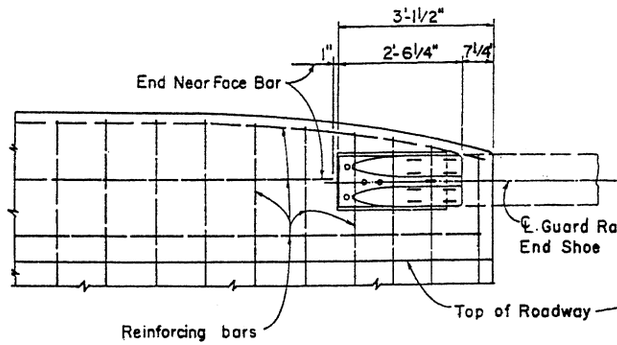

ROADWAY ELEVATION

Showing Guard Rail Shoe Connection
Scale: 3/4" = 1'- 0"

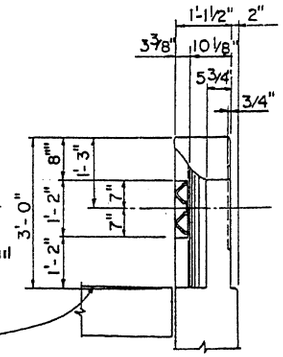

END ELEVATION OF DADO

Scale: 3/4" = 1'- 0"

GENERAL NOTES.

All dadoes shall be provided with Guard Rail connections for structures carrying two way traffic.
Only dadoes at the approach end shall be provided with Guard Rail connections for structures carrying one way traffic.
For dadoes without Guard Rail connections the inside face of dado shall be similar to the outside face.

Connect End Shoe to dado with 7/8" ϕ high strength bolts set in internally threaded tubular expansion anchors having an externally slit expansion element and a single cone expander. Tensile proof test load in 2500 psi concrete shall be 6500 Lbs. or more.
The Guard Rail End Shoe shall be 10 gage steel and galvanized after fabrication in accordance with A.S.T.M. Spec's A123.
For all other dado details, see Abutment Sheets.

Guard Rail End Shoe shall be furnished and installed with roadway approach guardrail.
The 7/8" ϕ high strength bolts shall be galvanized in accordance with A.S.T.M. Spec's A153.

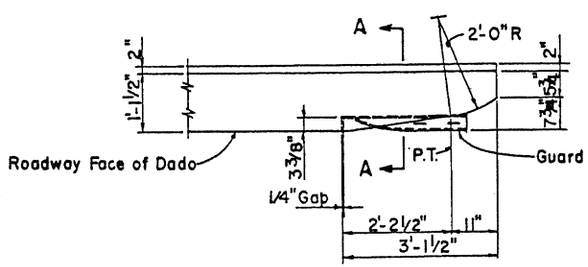

PLAN OF DADO

Showing Guard Rail Shoe Connection
Scale: 3/4" = 1'- 0"

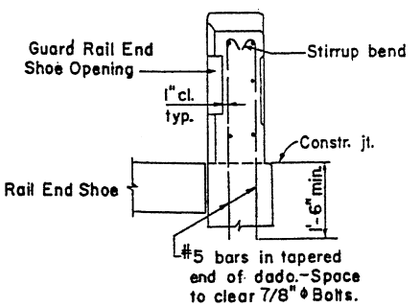

SECTION A-A

Scale: 3/4" = 1'-0"

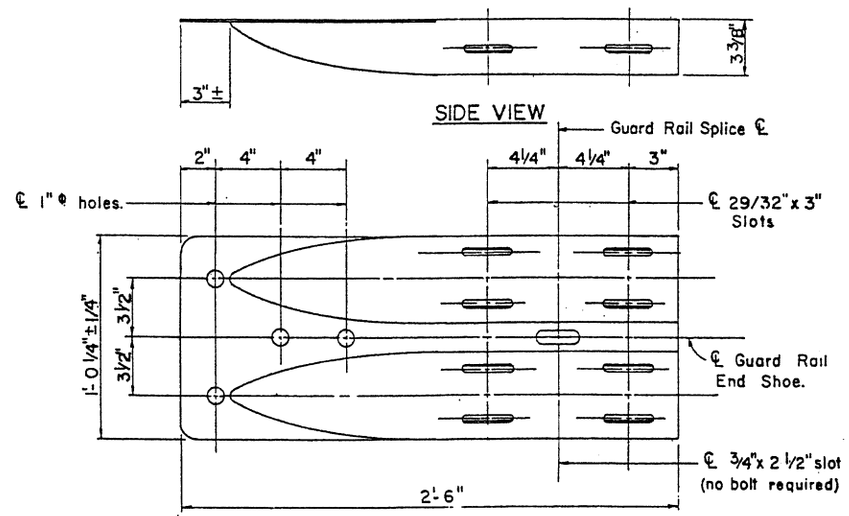

PLAN
GUARD RAIL END SHOE DETAIL

Scale: 3" = 1'- 0"

DESIGN APPROVED R.C. Buchler	STATE OF ARIZONA DEPARTMENT OF TRANSPORTATION DIVISION OF HIGHWAYS STANDARD DRAWINGS	REVISION	
APPROVED FOR DISTRIBUTION	GUARD RAIL END SHOE DADO CONNECTION	STANDARD NO. GD-1	DRAWING NO. B-21.01

DESIGN	DRAWN	CHECKED	NO.	DESCRIPTION OF REVISIONS	MADE BY	DATE
	MAH		11-69			

6 #/1

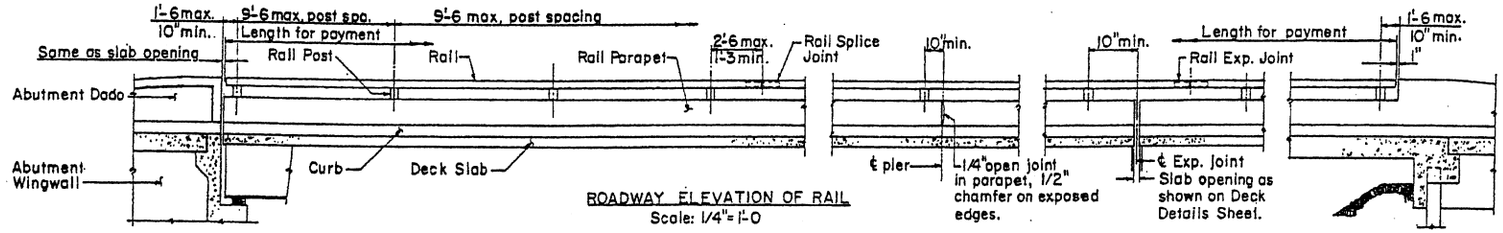

ROADWAY ELEVATION OF RAIL
Scale: 1/4" = 1'-0

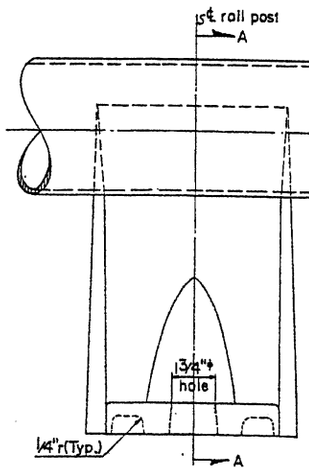

FRONT VIEW
Scale: 3/8" = 1"

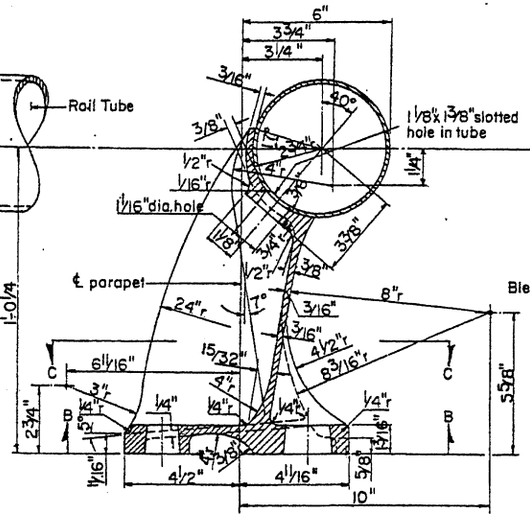

SECTION A-A
Scale: 3/8" = 1"

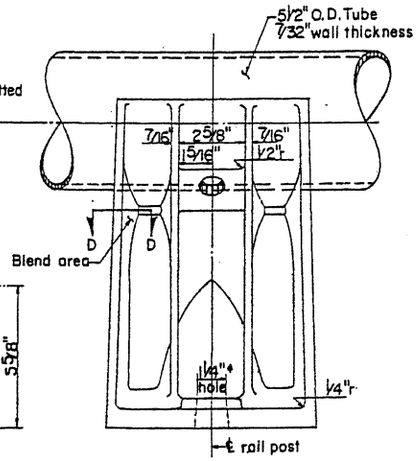

REAR VIEW
Scale: 3/8" = 1"

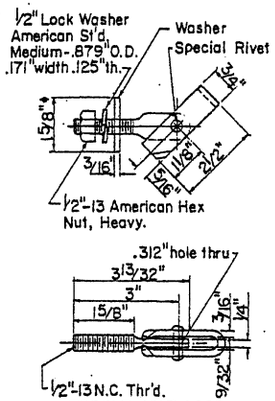

TOGGLE BOLT ASSEMBLY
Scale: 1/2" = 1"

MATERIALS

At the option of the contractor, tubing and rail posts shall be either galvanized steel or aluminum. Material for metal handrail shall be as follows:

Aluminum Tubing: Alloy 6061-T6, ASTM Specification B221.

Steel Tubing: ASTM A36 or ASTM A53, Grade A or B; galvanized after fabrication in accordance with ASTM A123.

Cast Aluminum Posts: AASHO M193 (Alloy A444-T4).

Cast Steel Posts: AASHO M192, Class 70; galvanized in accordance with ASTM A123.

Toggle Bolt Assembly: Toggle Bolt-1335 C.R. steel heat treated RC 32-38, ASTM A354; Toggle-1015 H.R. steel, ASTM A303; Washer-SAE 1020 H.R. steel plate, ASTM A7; Nut-1035 C.R. steel heat treated, ASTM A325, Grade 2H; Special Rivet-1038 C.R. steel heat treated, ASTM A195. All parts shall be cadmium plated type N5 .0005" thick, ASTM A165.

Anchor Bolts, Nuts, and Washers: ASTM A325, galv. in accordance with ASTM A153.

GENERAL NOTES

Design: AASHO 1973. Specifications for Highway Bridges.

All posts shall be normal to parapet.

All open ends of rail members shall be capped.

For horizontal curves of radius less than 200 ft., the rail member shall be fabricated to follow the curvature of the roadway.

All post dimensions shown are minimum.

Panel lengths of rail shall be attached to a minimum of three posts. All joints in railing shall be spliced as detailed.

Rail posts shall be seated on at least one shim having dimensions as shown. Additional shims or half-shims may be used in shimming for alignment. These shims shall be 1/16" in thickness and made of tightly twisted asbestos yarn spun with brass wire, woven into Asbestos-Metallic cloth and impregnated with a rubber heat-resisting compound.

At the centerline of each pier there shall be a 1/4" open joint in the parapet. The reinforcing steel in the parapet shall be discontinuous at this joint. If a rail post falls within 10" of this joint, the joint shall be relocated so as to maintain a 10" minimum between it and centerline of rail post.

Anchor bolts shall be preset in concrete. For spacing of rail posts see Deck Details Sheet.

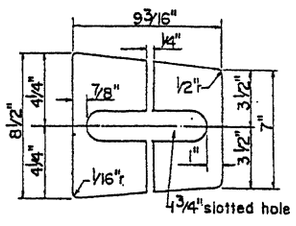

SHIM DETAIL
Scale: 1/4" = 1"

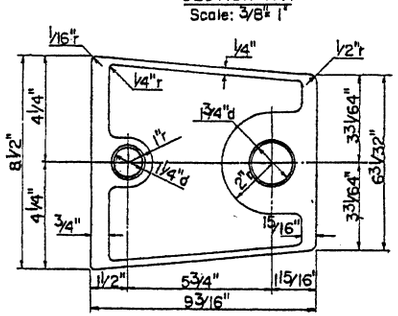

VIEW B-B
Scale: 3/8" = 1"

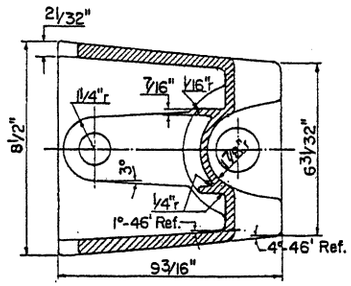

SECTION C-C
Scale: 3/8" = 1"

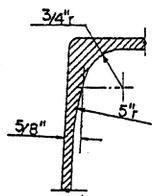

SECTION D-D
Scale: 3/4" = 1"

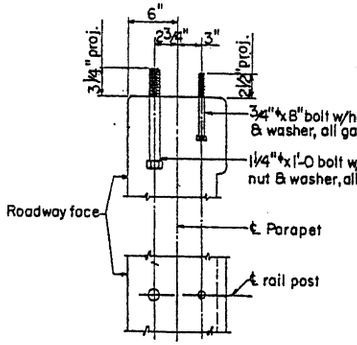

RAIL POST ANCHOR BOLT LAYOUT
Scale: 1 1/2" = 1'-0

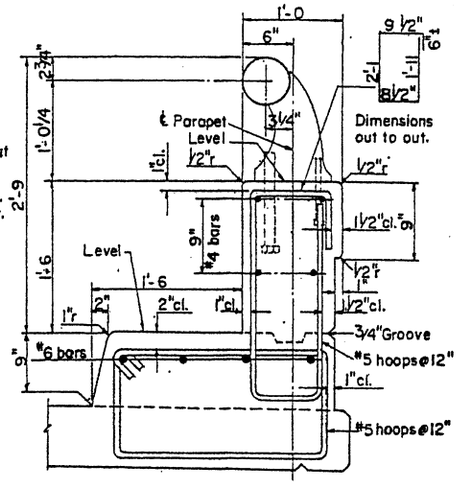

PARAPET DETAILS
Scale: 1 1/2" = 1'-0

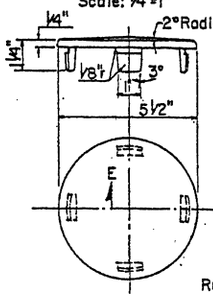

RAIL CAP
Scale: 3/8" = 1"

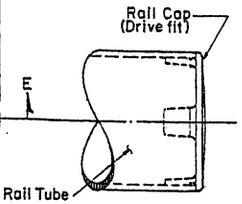

RAIL CAP CONNECTION
Scale: 3/8" = 1"

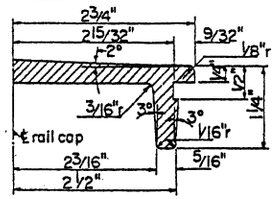

SECTION E-E
Full Scale

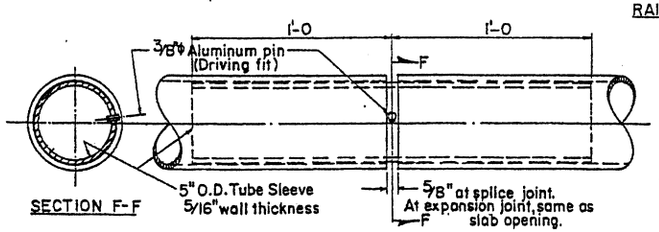

SECTION F-F

EXPANSION & SPLICE JOINT
Scale: 3" = 1'-0

DESIGN	RCB	10-64	1	DESCRIPTION OF REVISIONS	MADE BY	DATE	
DRAWN	RWB	11-64	2				
CHECKED	ABS	11-64	3				

Revise sale specs to from ASTM A123 & A153. Added Aluminum Rail Spec's AASHO M193-64T. Aluminum tubing alloy 6061-T6 detailed. 4-1-66

Add "post" to note "All dim. shown are min." Rev. 3/4" proj. to 3/4" proj. for 1/2" anchor bolts. Rev. 3" proj. to 2 1/2" proj. for 1/2" anchor bolts.

DESIGN APPROVED R.C. Buehler

APPROVED FOR DISTRIBUTION

STATE OF ARIZONA
DEPARTMENT OF TRANSPORTATION
DIVISION OF HIGHWAYS
STANDARD DRAWINGS

SINGLE HANDRAIL

REVISION

STANDARD NO. H-1-1

DRAWING NO. B-22.01

11 #11

Rev. galv. Spec. from ASTM A123 to A153.
Rev. Rail Anchor Bolt Assembly.
Rev. 2" proj. to 2¼" for ½" ϕ anchor bolts.

4-1-66. Added "Post" to note "All dimensions are mm."
Added Alum. Post Spec. AASHO M193-641.
Alum. Tubing 6062-T6 deleted.

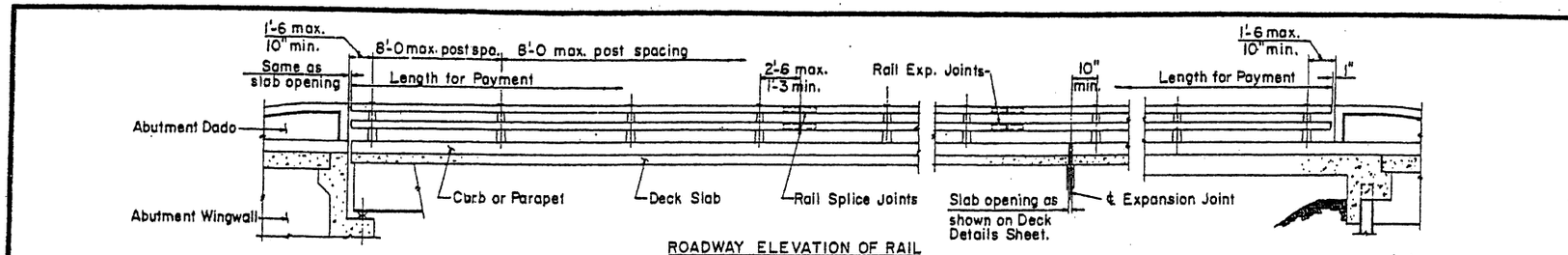

ROADWAY ELEVATION OF RAIL
Scale: 1/4" = 1'-0

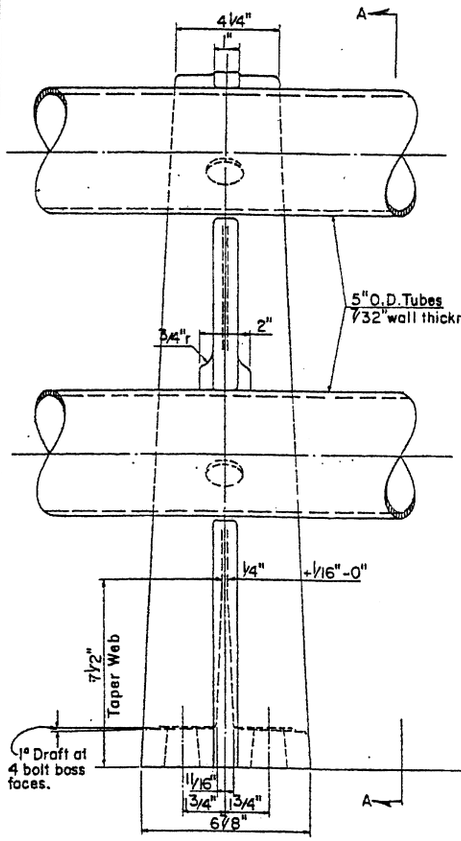

ROADWAY ELEVATION OF RAIL
Scale: 3/8" = 1"

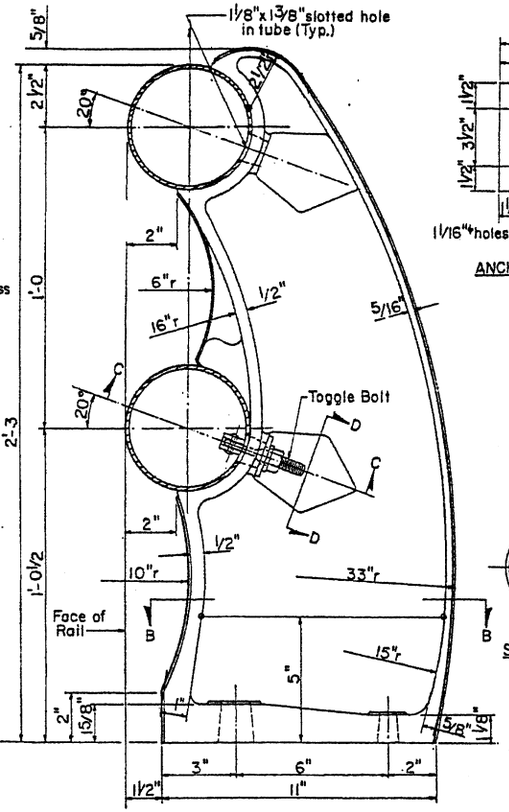

SECTION A-A THRU RAILS
Scale: 3/8" = 1"

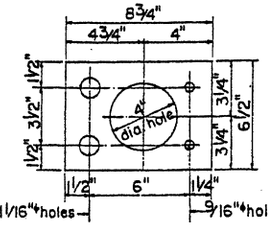

ANCHOR PLATE DETAILS
Scale: 1/4" = 1"

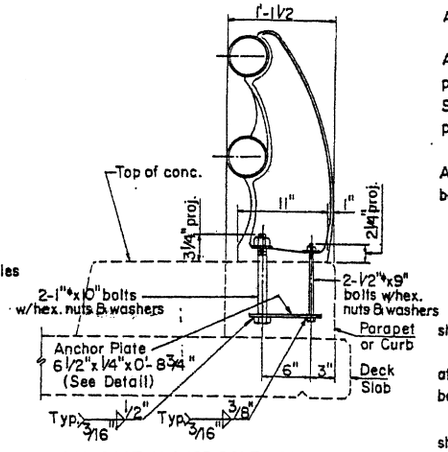

RAIL POST ANCHOR BOLT ASSEMBLY
Scale: 1½" = 1'-0

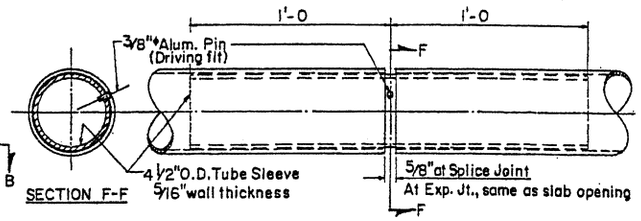

SECTION F-F

EXPANSION & SPLICE JOINT
Scale: 3" = 1'-0

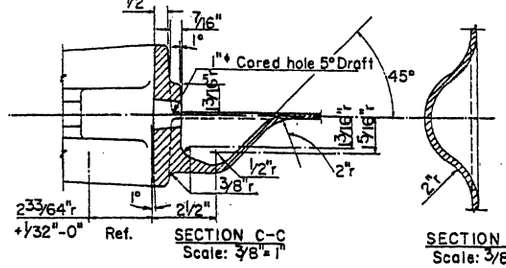

SECTION C-C
Scale: 3/8" = 1"

SECTION D-D
Scale: 3/8" = 1"

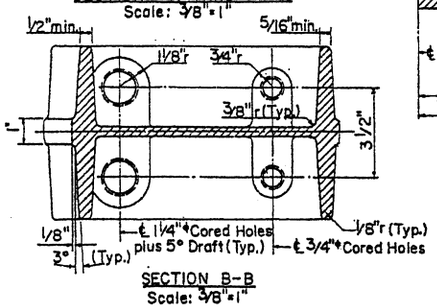

SECTION B-B
Scale: 3/8" = 1"

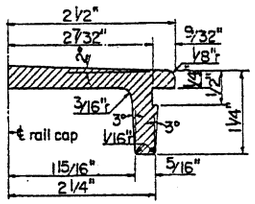

SECTION E-E
Full Scale.

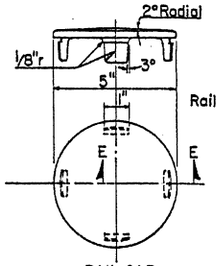

RAIL CAP
Scale: 3/8" = 1"

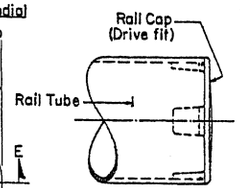

RAIL CAP CONNECTION
Scale: 3/8" = 1"

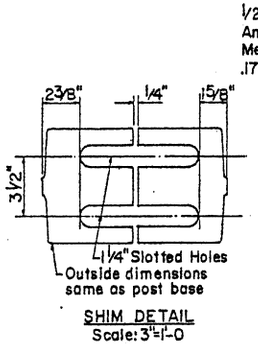

SHIM DETAIL
Scale: 3" = 1'-0

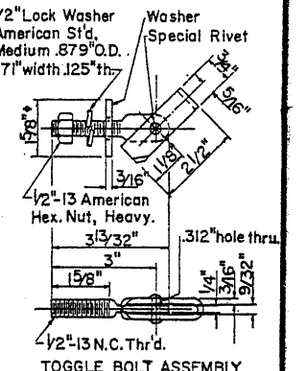

TOGGLE BOLT ASSEMBLY
Scale: 1/2" = 1"

MATERIALS

At the option of the contractor, tubing and rail posts shall be either galvanized steel or aluminum. Castings shall have a maximum draft of 3° and a minimum radius of fillet of 1/4" unless otherwise shown. All post dimensions are minimum. Material for metal handrail shall be as follows:

Aluminum Tubing: Alloy 6061-T6, ASTM Specification B221.

Steel Tubing: ASTM A36 or ASTM A53, Grade A or B; galvanized after fabrication in accordance with ASTM A123.

Cast Aluminum Posts: AASHO M193 (Alloy A 444-T4).

Cast Steel Posts: AASHO M192, Class 70; galvanized in accordance with ASTM A123.

Toggle Bolt Assembly: Toggle Bolt-1335 C.R. steel heat treated RC 32-38, ASTM A354; Toggle-1015 H.R. steel, ASTM A303; Washer-SAE 1020 H.R. steel plate, ASTM A7; Nut-1035 C.R. steel heat treated, ASTM A325, Grade 2H; Special Rivet-1038 C.R. steel heat treated, ASTM A195. All parts shall be cadmium plated type NS .0005" thick, ASTM A165.

Anchor Bolt Assembly: Anchor Bolts, Nuts, and Washers shall be ASTM A325. Anchor Plates shall be ASTM A36. Exposed portion of the assembly to be galvanized in accordance with ASTM A153.

GENERAL NOTES

Design: AASHO 1973, [illegible] Sections for Highway Bridges.

All posts shall be normal to parapet or curb.

All open ends of rail members shall be capped.

For horizontal curves of radius less than 2,000 ft., the rail member shall be fabricated to follow the curvature of the roadway.

Panel lengths of rail shall be attached to a minimum of four posts, (except at Abutment Dados). Rail tube sections shall be spliced in the same panel, joints being spliced as detailed.

Rail posts shall be seated on at least one shim having dimensions as shown. Additional shims or half-shims may be used in shimming for alignment. These shims shall be 1/16" in thickness and made of tightly twisted asbestos yarn spun with brass wire, woven into Asbestos-Metallic cloth and impregnated with a rubber heat-resisting compound.

For spacing of rail posts, concrete dimensions, and reinforcing steel, see Deck Details Sheet.

DESIGN	ARS, RCB	10-64	NO.	DESCRIPTION OF REVISIONS	MADE BY	DATE	
DRAWN	RWB	12-64	1				
CHECKED	ARS	12-64	2				
			3				

DESIGN APPROVED: R.C. Buehler

APPROVED FOR DISTRIBUTION: E. Hendricks

STATE OF ARIZONA
DEPARTMENT OF TRANSPORTATION
DIVISION OF HIGHWAYS
STANDARD DRAWINGS

DOUBLE HANDRAIL

REVISION

STANDARD NO. H-2-1

DRAWING NO. B-22.02

14 #1,

Rev. gen. specs from ASTM-A148 to A193.
Rev. Rail Anchor Bolt Assembly.
Rev. 2" proj. to 2¼" for ½" anchor bolts.

4-1-66 Added "Post" to note #18 dimension are min.
Added Alum. Post Spec. AASHO M193-61.
Alum. Tubing Alloy 6061-T6 deleted.

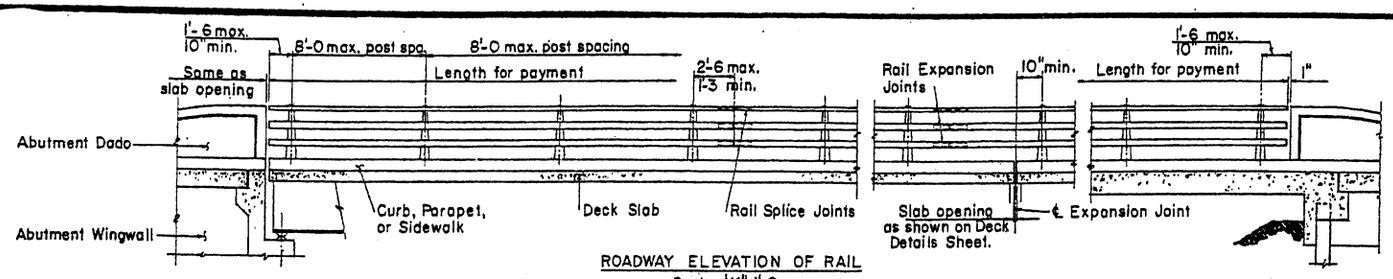

ROADWAY ELEVATION OF RAIL
Scale: ¼"=1'-0

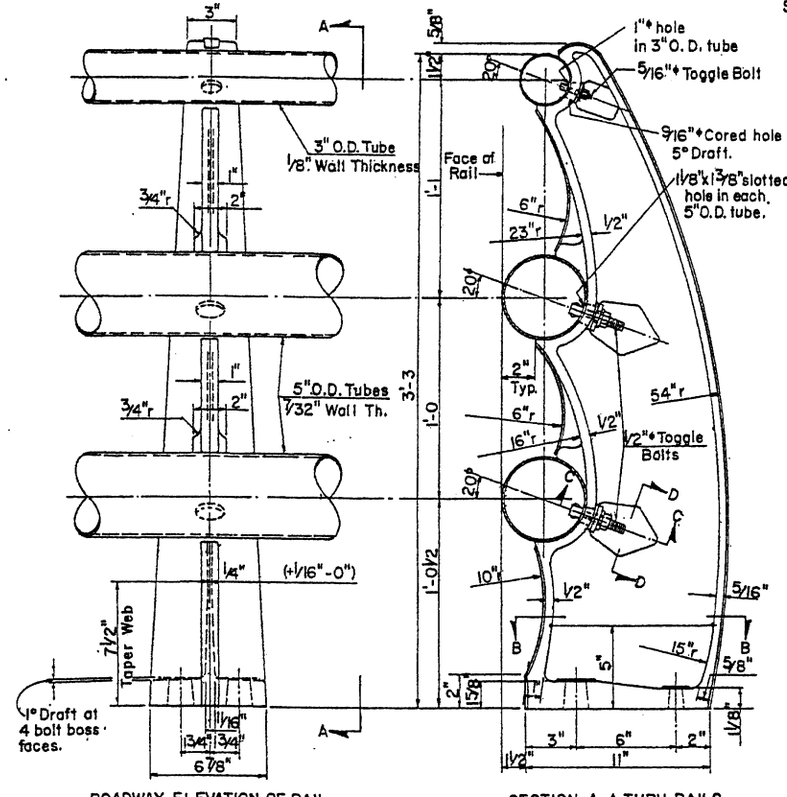

ROADWAY ELEVATION OF RAIL
Scale: ¼"=1'-0

SECTION A-A THRU RAILS
Scale: ¼"=1"

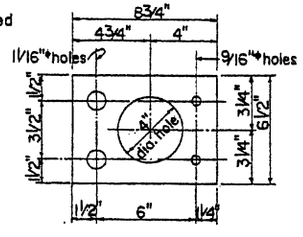

ANCHOR PLATE DETAILS
Scale: ¼"=1"

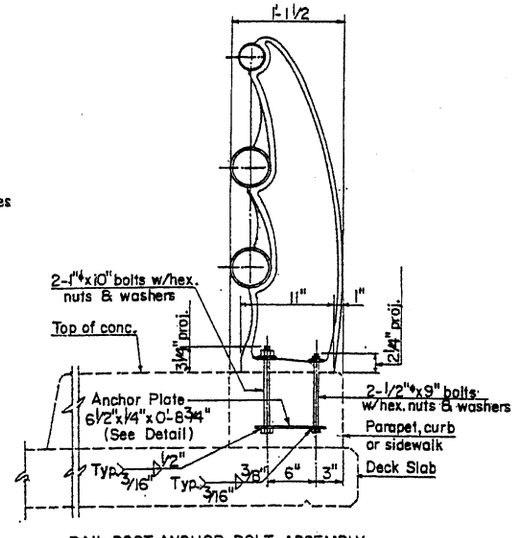

RAIL POST ANCHOR BOLT ASSEMBLY
Scale: 1½"=1'-0

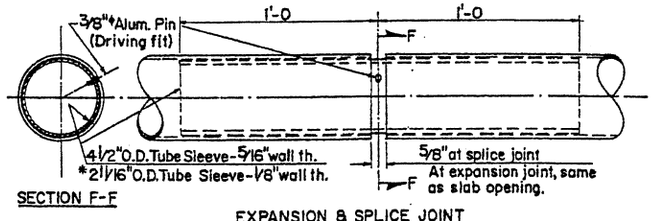

SECTION F-F

EXPANSION & SPLICE JOINT
Scale: 3"=1'-0

MATERIALS

At the option of the contractor, tubing and rail posts shall be either galvanized steel or aluminum. Castings shall have a maximum draft of 3° and a minimum radius of fillet of ¼" unless otherwise shown. All post dimensions are minimum. Material for metal handrail shall be as follows:

Aluminum Tubing: Alloy 6061-T6, ASTM Specification B221.

Steel Tubing: ASTM A36 or ASTM A53, Grade A or B; galvanized after fabrication in accordance with ASTM A123.

Cast Aluminum Posts: AASHO M193 (Alloy A444-T4).

Cast Steel Posts: AASHO M192, Class 70; galvanized in accordance with ASTM A123.

Toggle Bolt Assemblies: All material for the 5/16" ϕ toggle bolt shall conform to SAE 1020. Material for the ½" ϕ toggle bolt shall be as follows: Toggle Bolt - 1335 C.R. steel heat treated RC 32-38, ASTM A354; Toggle - 1015 H.R. steel, ASTM A303; Washer - SAE 1020 H.R. steel plate, ASTM A7; Nut - 1035 C.R. steel heat treated, ASTM A325, Grade 2H; Special Rivet - 1038 C.R. steel heat treated, ASTM A195. All parts shall be cadmium plated type NS .0005" thick, ASTM A165.

Anchor Bolt Assembly: Anchor Bolts, Nuts, and Washers shall be ASTM A325. Anchor Plates shall be ASTM A36. Exposed portion of the assembly to be galvanized in accordance with ASTM A153.

GENERAL NOTES

Design: AASHO 1973. Specifications for Highway Bridges.

All posts shall be normal to parapet, curb, or sidewalk.

All open ends of rail members shall be capped.

For horizontal curves of radius less than 2,000 ft., the rail member shall be fabricated to follow the curvature of the roadway.

Panel lengths of rail shall be attached to a minimum of four posts, (except at Abutment Dados). Rail tube sections shall be spliced in the same panel, joints being spliced as detailed.

Rail posts shall be seated on at least one shim having dimensions as shown. Additional shims or half-shims may be used in shimming for alignment. These shims shall be 1/16" in thickness and made of tightly twisted asbestos yarn spun with brass wire, woven into Asbestos-Metallic cloth and impregnated with a rubber heat-resisting compound.

For spacing of rail posts, concrete dimensions, and reinforcing steel, see Deck Details Sheet.

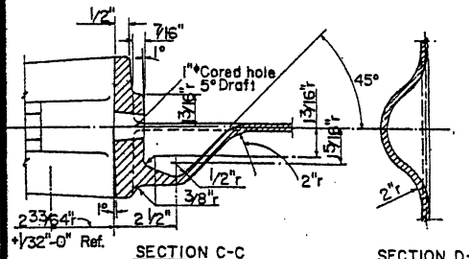

SECTION C-C
Scale: 3/8"=1"

SECTION D-D
Scale: 3/8"=1"

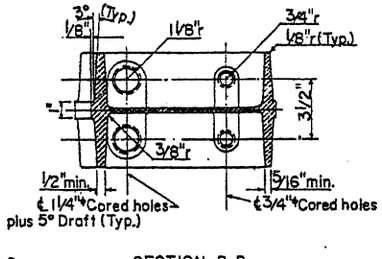

SECTION B-B
Scale: ¼"=1"

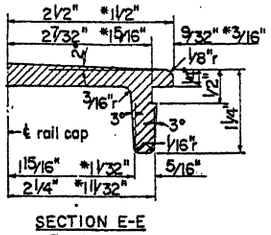

SECTION E-E
Full Scale

* Denotation thus applies to top rail member only.

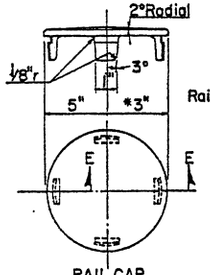

RAIL CAP
Scale: 3/8"=1"

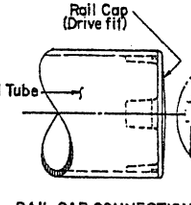

RAIL CAP CONNECTION
Scale: 3/8"=1"

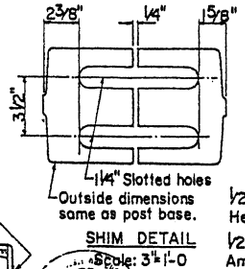

SHIM DETAIL
Scale: 3"=1'-0

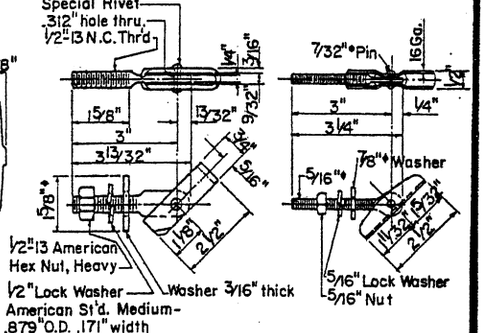

TOGGLE BOLT ASSEMBLIES
Scale ½"=1"

DESIGN	AGS, RCB	10-64	⑦	DESCRIPTION OF REVISIONS	MADE BY	DATE	
DRAWN	RWB	12-64	⑧				
CHECKED	AGS	12-64	⑨				

DESIGN APPROVED R.C. Buchler

APPROVED FOR DISTRIBUTION

STATE OF ARIZONA
DEPARTMENT OF TRANSPORTATION
DIVISION OF HIGHWAYS
STANDARD DRAWINGS

TRIPLE HANDRAIL

REVISION

STANDARD NO. H-3-1

DRAWING NO. B-22.03

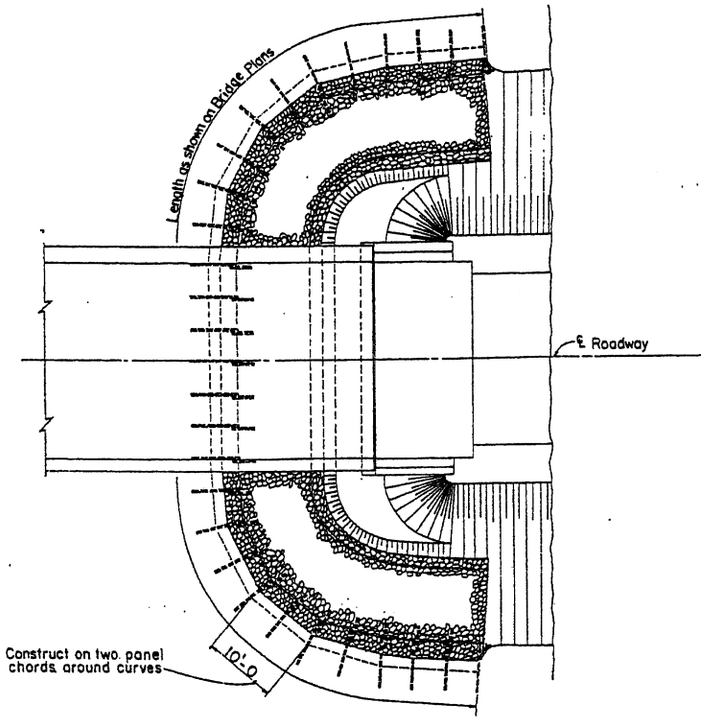

PLAN OF BANK PROTECTION AT ABUTMENT
Scale: 1" = 10'

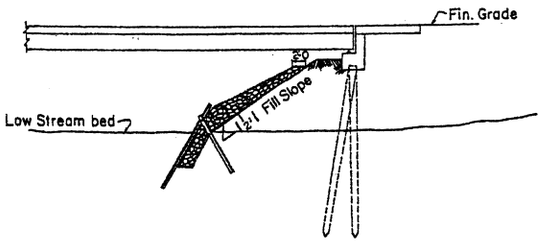

SECTION ON ℄ ROADWAY

RAIL CONNECTION DETAIL
Scale: 1½" = 1'-0
Burn holes through rails in field and bolt together as shown

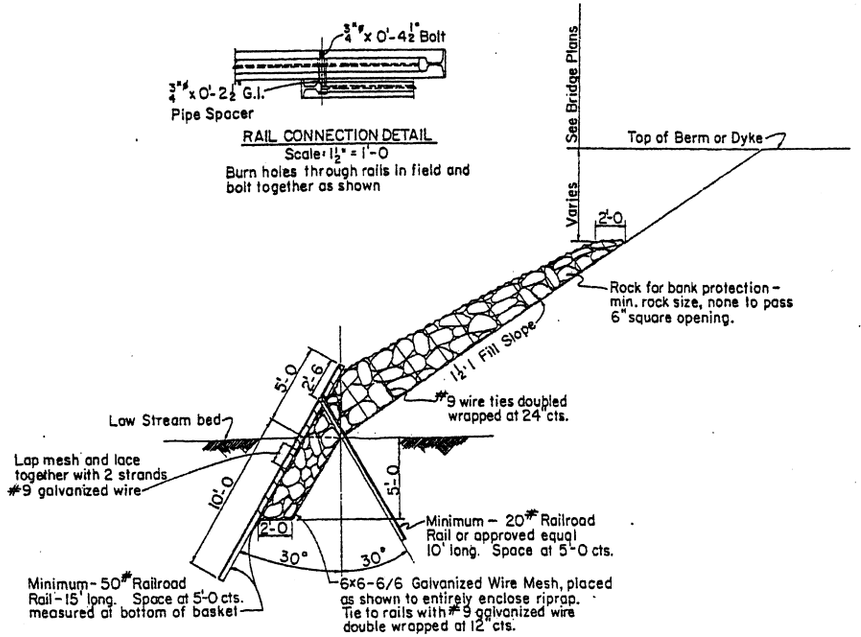

DETAIL - A
Scale: ¼" = 1'-0

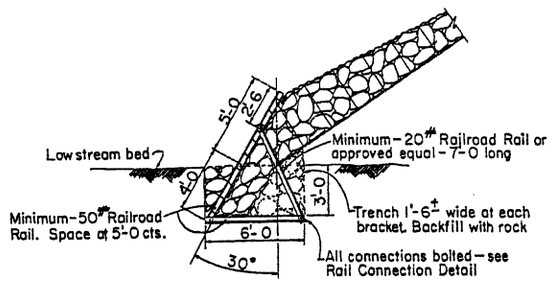

DETAIL - B
Scale ¼" = 1'-0

Use this Detail ONLY when called for on Bridge Plans

NOTE:
See Detail - A for dimensions and other details not shown

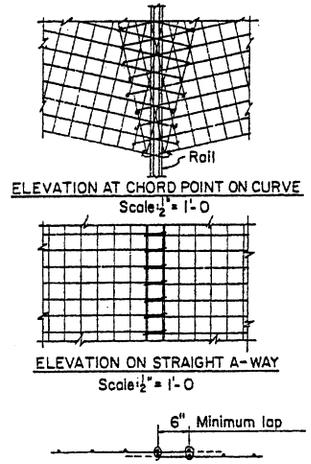

ELEVATION AT CHORD POINT ON CURVE
Scale: ½" = 1'-0

ELEVATION ON STRAIGHT A-WAY
Scale: ½" = 1'-0

SECTION
Scale: 1" = 1'-0

WIRE MESH SPLICE DETAILS

GENERAL NOTES

Construction - St'd. Spec's. Arizona Highway Department Edition of 1969, revised to date.

Rails may be either new or used. If used rails are furnished they shall be free from rust and equal to 95% of original section.

All wire mesh, bolts, pipe spacers and tie wire shall be galvanized.

DESIGN	KST	2-73
DRAWN	JRM	3-73
CHECKED		

NO.	DESCRIPTION OF REVISIONS	MADE BY	DATE
1	Removed 2:1 Rock Slope note	JTW	7-76
2			
3			

DESIGN APPROVED	STATE OF ARIZONA DEPARTMENT OF TRANSPORTATION DIVISION OF HIGHWAYS STANDARD DRAWINGS	REVISION 7-76
APPROVED FOR DISTRIBUTION	RAIL BANK PROTECTION FOR BRIDGES	STANDARD NO. RB-2 DRAWING NO. B-23.01

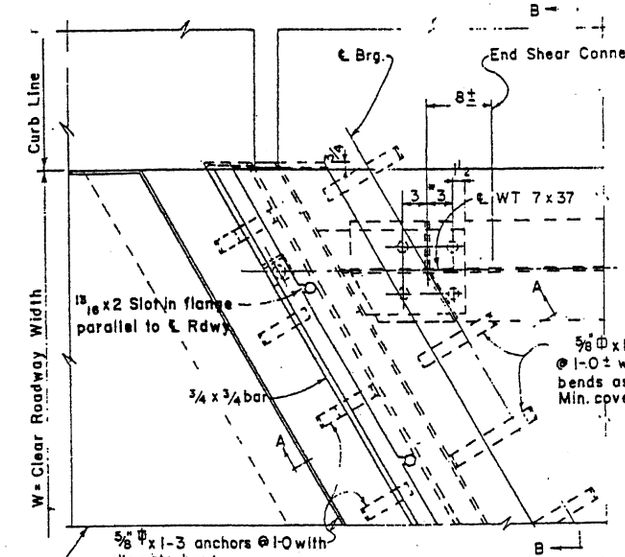

PLAN
SKEW BRIDGE

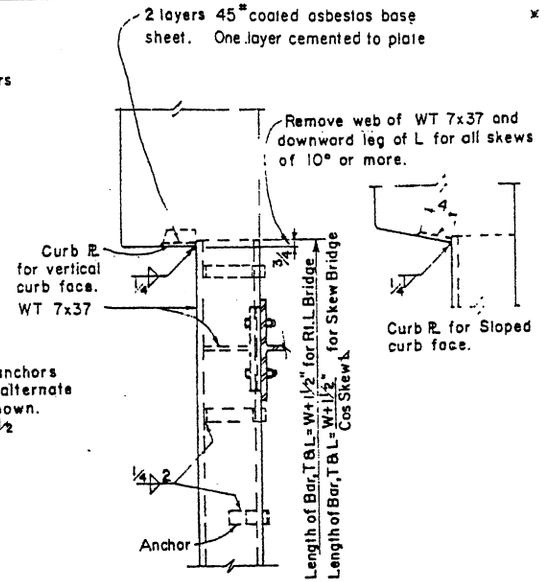

SECTION B-B

× Revise to clear bearing stiffeners if necessary.

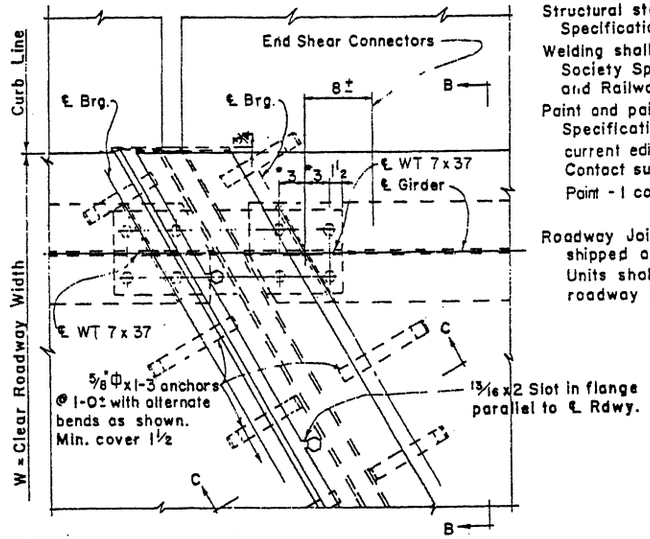

PLAN
SKEW BRIDGE

GENERAL NOTES :-

Structural steel shall conform to A.S.T.M. Specification A-36.

Welding shall conform to American Welding Society Specifications for Welded Highway and Railway Bridges.

Paint and painting shall conform to Standard Specifications of Arizona Highway Dept. - current edition.

Contact surfaces shall not be painted.

Point - 1 coat each 1A or 1B, 3-and 10

Roadway Joint shall be shop assembled, shipped and erected as a unit.

Units shall be contoured to conform to the roadway section as noted on deck details.

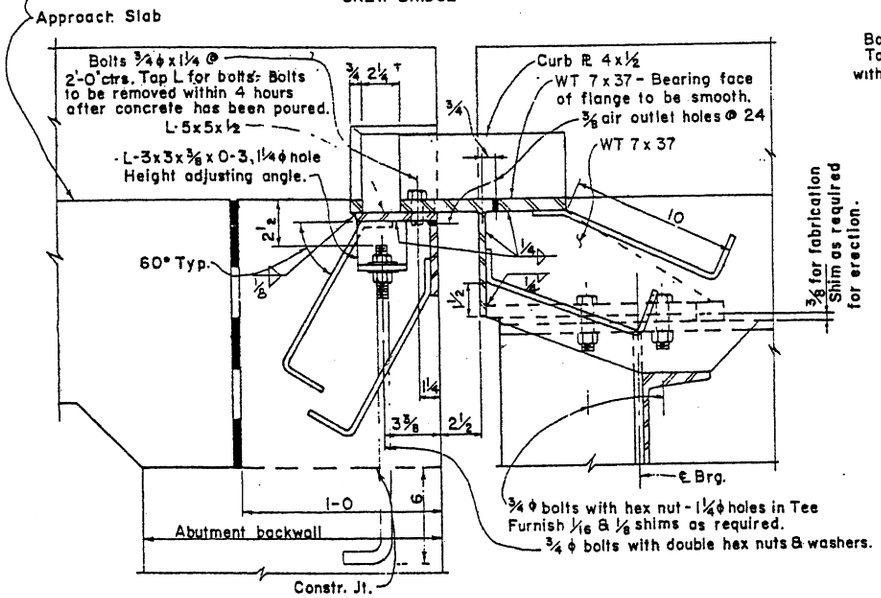

SECTION A-A
AT ABUTMENTS

‡ 2¼" max. at 70° F

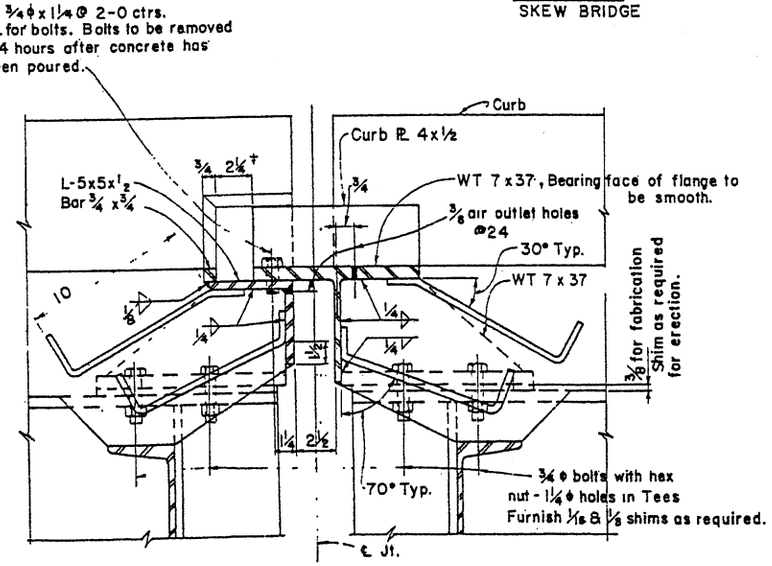

SECTION C-C
AT PIERS & HINGED SPANS

DESIGN	RJR	6-62	NO.	DESCRIPTION OF REVISIONS	MADE BY	DATE
DRAWN	CW	8-62	1			
CHECKED	RJR	10-62	2			
			3			

DESIGN APPROVED R.C. Brechler

APPROVED FOR DISTRIBUTION F. R. Sandi

STATE OF ARIZONA
DEPARTMENT OF TRANSPORTATION
DIVISION OF HIGHWAYS
STANDARD DRAWINGS

ROADWAY JOINT-STEEL

REVISION

STANDARD NO. RJ-3

DRAWING NO. B-24.01

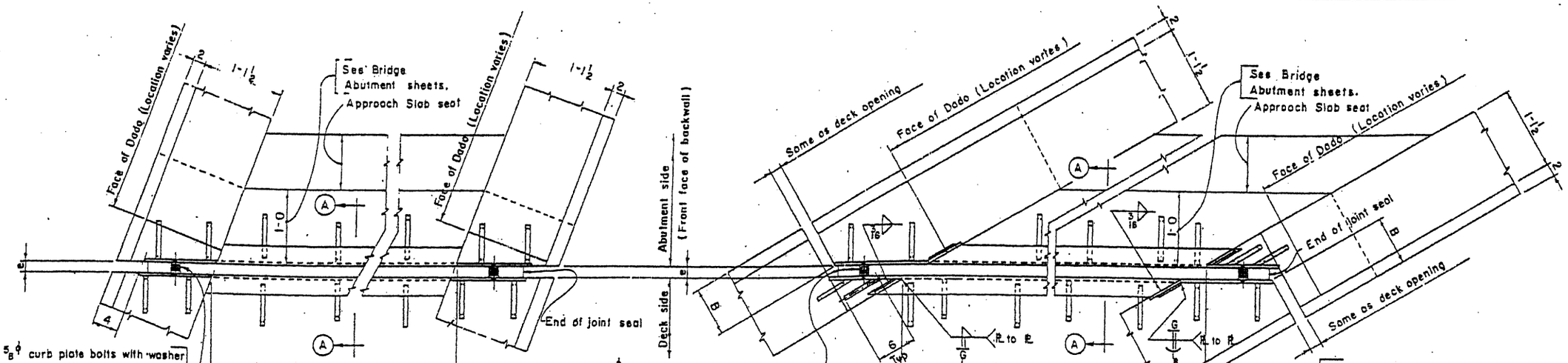

Skew Angle	Dimension B
21° thru 33°	4
34° thru 36°	4 1/2
37° thru 40°	5
41° thru 43°	5 1/2
44° thru 47°	6
48° thru 51°	6 1/2
52° thru 54°	7
55° thru 57°	7 1/2
58° thru 60°	8

	2 x 2 Nominal Dim. Polychloroprene Cellular Joint Seal	3x3 Nominal Dim. Polychloroprene Cellular Joint Seal
a	6 1/2	7
b	1 3/8	1 5/16
c	3 3/4	4 3/8
d	2x2 x 1/4 x 0-6 1/2 angles	3x3x3/8 x 0-7 angles
e	1 1/4 @ 70°F	1 1/8 @ 70°F
f	2 1/2	3 5/8
g or g1	1/4 x 3/4 bar	3/8 x 3/4 bar

NOTES

Paint -- 1 coat each #1A or #1B, #3 and #10 on surfaces of 5 x 3 x 5/16 guard angles, bar g, bar g1 and 5/16 plates not in contact with joint seal or concrete.

1 coat #1A or #1B on joint seal face of guard angles, bar g, bar g1 and 5/16 plates.

Joint opening e shall be adjusted in the field for any variation of temperature above or below 70°F, for temperature correction refer to Bridge sheets.

Material -- Structural Steel - A.S.T.M. - A36.

Erection angles and curb plate bolts shall not be removed until joint is fully encased in concrete (except curbs) and such concrete has attained its initial set.

Holes for curb plate bolts shall be plugged before placing curb concrete.

DESIGN APPROVED R.C. Buchli

APPROVED FOR DISTRIBUTION

STATE OF ARIZONA
DEPARTMENT OF TRANSPORTATION
DIVISION OF HIGHWAYS
STANDARD DRAWINGS

ROADWAY JOINT
POLYCHLOROPRENE

REVISION

STANDARD NO. RJ-4

DRAWING NO. B-24.02