ARIZONA DEPARTMENT OF TRANSPORTATION

206 South Seventeenth Avenue - Phoenix, Arizona 85007-3213
Phone: (602) 255-7226 - FAX: (602) 255-6941

FIFE SYMINGTON
Governor

LARRY S. BONINE
Director

May 25, 1994

Engineering Consultants Section

# INFORMATION BULLETIN 93-27

TO: CONSULTANTS

FROM: ENGINEERING CONSULTANTS SECTION

SUBJECT: MAY, 1994 REVISED CONSTRUCTION STANDARD DRAWINGS

The purpose of this letter is to inform you that the Construction Standard Drawings have been revised as shown on the attachment.

Copies of the revised standards are available from Engineering Records Services.

For further information, please contact Terry Otterness at 255-7341.

RET/ret

attachment

202/2

ARIZONA DEPARTMENT OF TRANSPORTATION

**OFFICE MEMO**

May 23, 1994

RECEIVED
MAY 24 1994
ENGINEERING CONSULTANTS SERVICES

TO: AUGUST V. HARDT
Deputy State Engineer
District Operations Group, 174A

FROM: TERRY H. OTTERNESS
Design Program Manager
Roadway Engineering Group

RE: May, 1994 Revised Construction Standard Drawings

Reference is made to the attached May 6th FHWA letter approving the revised Construction Standard Drawings. Please be advised that Construction Standard Drawings: C-09.20, C-10.23, C-10.24, C-10.25, C-10.30, C-10.35, C-10.40, C-10.45, C-10.50, C-10.55 and C-10.96 are officially deleted. Please note that sheet 1 of the index for the Construction Standard Drawings has also been revised.

Copies of the revised standards are available from Engineering Records Services. These revised standards will be in effect upon distribution from Engineering Records. However, these revised standards will not be in effect for projects that have already been advertised for bid. All projects that are already in Contracts and Specifications and have not been advertised should be individually evaluated as to whether to use the revised standards. Also, please note that plan sheet 1A is being revised.

Terry H. Otterness

THO:PNB:tbw
No. 2560

Attachment

c: John Louis, Roadway Engineering Group
Robert Mickelson, Program and Project Management
Dallas Saxton, Transportation Support Group
Ron Williams, Construction Group
Larry Langer, Statewide Project Management Section
Mark Danelowitz, Local Government Section
E. Leroy Brady, Roadside Development Section
David Allocco, Contracts and Specifications Section
Charles Eaton, Traffic Group
Peter Eno, Engineering Consultants
F. Dan Davis, Bridge Group
Douglas Forstie, Materials Group

U.S. DEPARTMENT OF TRANSPORTATION
FEDERAL HIGHWAY ADMINISTRATION
REGION NINE
ARIZONA DIVISION
234 N. Central Ave., Suite 330
Phoenix, Arizona 85004

ARIZONA
CALIFORNIA
NEVADA
HAWAII
GUAM
AMERICAN SAMOA
N. MARIANA IS.

May 6, 1994

IN REPLY REFER TO

HEC-AZ
(430.2)
Revisions to Construction
Standard Drawings

Mr. Terry Otterness
Design Program Manager
Roadway Engineering Group
Arizona Dept. of Transportation
Phoenix, Arizona 85007

Dear Mr. Otterness:

In response to your letter of April 27, 1994, the following Construction Standard Drawings are approved by the Federal Highway Administration:

| Drawing Number | Description | Revision Date |
|---|---|---|
| C-03.10 (1 of 5) | Ditches, Channels, Dikes & Berms Ditches and Channels | 3/94 |
| C-03.10 (2 of 5) | Ditches, Channels, Dikes & Berms Dikes | 3/94 |
| C-03.10 (3 of 5) | Ditches, Channels, Dikes & Berms Ditch Dike | 3/94 |
| C-03.10 (4 of 5) | Ditches, Channels, Dikes & Berm Pipe Berms | 3/94 |
| C-03.10 (5 of 5) | Ditches, Channels, Dikes & Berms Headwall Berms | 3/94 |
| C-05.30 (1 of 4) | Sidewalk Ramp, Type 1 | 3/94 |
| C-05.30 (2 of 4) | Sidewalk Ramp, Type 2 | 3/94 |
| C-05.30 (4 of 4) | Sidewalk Ramp, Type 4 | 3/94 |
| C-07-01 (2 of 2) | PCCP Joints | 3/94 |

RECEIVED
MAY 10 1994
DESIGN SECTION
ROADWAY ENGINEERING GROUP

| Drawing Number | Description | Revision Date |
|---|---|---|
| C-10.28 (1 of 2) | Nested Steel W Beam Short Span-Type 1 & 2 | 3/94 |
| C-10.28 (2 of 2) | Nested Steel W Beam Long Span-Type 3 | 3/94 |
| C-10.29 (1 of 2) | Bolted Anchor Guard Rail | 3/94 |
| C-10.29 (2 of 2) | Bolted Anchor Guard Rail | 3/94 |
| C-10.30 (1 of 3) | Guard Rail Transition W Beam to Concrete Half Barrier (Approach) | 3/94 |
| C-10.30 (2 of 3) | Guard Rail Transition W Beam to Concrete Half Barrier (Approach) | 3/94 |
| C-10.30 (3 of 3) | Guard Rail Transition W Beam to Concrete Half Barrier (Approach) | 3/94 |
| C-10.31 (1 of 3) | Guard Rail Transition W Beam to Concrete Half Barrier (Approach)(With Curb) | 3/94 |
| C-10.31 (2 of 3) | Guard Rail Transition W Beam to Concrete Half Barrier (Approach)(With Curb) | 3/94 |
| C-10.31 (3 of 3) | Guard Rail Transition W Beam to Concrete Half Barrier (Approach)(with Curb) | 3/94 |
| C-10.32 (1 of 3) | Guard Rail Transition W Beam to Concrete Half Barrier (Departure) | 3/94 |
| C-10.32 (2 of 3) | Guard Rail Transition W Beam to Concrete Half Barrier (Departure) | 3/94 |
| C-10.32 (3 of 3) | Guard Rail Transition W Beam to Concrete Half Barrier (Departure) | 3/94 |
| C-10.39 | Hardware for W Beam Transition to Concrete Barrier | 3/94 |

| Drawing Number | Description | Revision Date |
|---|---|---|
| C-10.70 (1 of 4) | Concrete Half Barrier Transition | 3/94 |
| C-10.70 (2 of 4) | Concrete Half Barrier Transition | 3/94 |
| C-10.70 (3 of 4) | Concrete Half Barrier Transition | 3/94 |
| C-10.70 (4 of 4) | Concrete Half Barrier Transition | 3/94 |
| C-10.74 | Hardware for Concrete Barrier Transitions | 3/94 |
| C-10.80 (1 of 2) | Rub Rail | 3/94 |
| C-10.80 (2 of 2) | Rub Rail | 3/94 |
| C-10-83 | Hardware for Rub Rail | 3/94 |
| C-10.97 (1 of 3) | Glare Screen Concrete Median Barrier | 3/94 |
| C-10.97 (2 of 3) | Glare Screen Concrete Median Barrier | 3/94 |
| C-10.97 (3 of 3) | Glare Screen Concrete Median Barrier | 3/94 |
| C-12.20 (1 of 3) | Fence, Chain Link Type 1 | 3/94 |
| C-12.20 (2 of 3) | Fence, Chain Link Type 2 | 3/94 |
| C-12.20 (3 of 3) | Fence, Chain Link Gates | 3/94 |

This letter also deletes Standard Drawings C-09.20, C-10.23, C-10.24, C-10.25, C-10.30, C-10.35, C-10.40, C-10.45, C-10.50, C-10.55, and C-10.96 as they have been replaced with new standards having new numbers.

Enclosed is one copy of each of the above Standard Drawings with FHWA approval indicated thereon.

Sincerely yours,

David E. Bender
Assistant Division Administrator

Enclosure

May 11, 1994

RECEIVED
MAY 24 1994
ENGINEERING CONSULTANTS SERVICES

TO: All Users of Construction Standards

FROM: Mr. Terry H. Otterness, Design Program Manager, Roadway Engineering Group
Mr. August V. Hardt, Assistant State Engineer, District Operations Group, Administration

SUBJECT: Revisions to Construction Standards

Several changes are being made to existing Construction Standard Drawings and the Construction Standards Index.

Major changes include: revising and expanding dikes and berms, replacing buried anchor guard rail with nested guard rail, consolidating bolted anchor guard rail into one standard, updating glare screen, and new standards for: guard rail transitions, concrete half barrier transition, and rub rail. Also, eleven existing standards are being deleted.

A complete listing of the changed Standards and the various revisions is as follows:

| REVISED DRAWING | REVISION |
|---|---|
| C-03.10 Ditches, Channels, Dikes & Berms | Deleted old note 4 that referred to a non-existant standard.<br>Corrected spelling of "dyke".<br>Added slope rounding to crown and grader ditch details.<br>Added a callout for profile grades on channels with a bottom width more than 10'.<br>Expanded standard: ditches and channels on one sheet and dikes on another.<br>Added items frequently used as details: ditch dikes, pipe berms, headwall berms.<br>Fixed dike slopes within clear zone or "recovery area" at 10:1.<br>Added a perspective view of a typical median dike installation. |
| C-05.30 Sidewalk Ramps | Type 1 - Added note indicating 4' minimum bottom width, as per ADA.<br>Types 2 & 4 - Added note indicating that for curb heights over 7" to see plans.<br>Modified note indicating that for curb heights under 6" to use values shown for 6" high curb. |

| REVISED DRAWING | REVISION |
|---|---|
| C-07.01 PCCP Joints | Revised median barrier joint to show all PCCP.<br>Revised median barrier joint to show AC and PCCP and revised the joint.<br>Added note on pavement cross slope. |
| C-10.28 Nested Steel W Beam | New standard replaces old buried anchor portions of old Stds C-10.23 & C-10.24. |
| C-10.29 Bolted Anchor Guard Rail | New standard from bolted anchor portions of old Stds C-10.23 & C-10.24. |
| C-10.30 Guard Rail Transition W Beam to Half Barrier (Approach) | New standard from portions of old Stds C-10.25, C-10.30, & C-10.35.<br>Removed all but first two rectangular plate washers.<br>For steel posts, changed the W structural shape blockouts on the first two posts to 6"x6" tube. |
| C-10.31 Guard Rail Transition W Beam to Half Barrier (Appr.)(Curb) | New standard from portions of old Stds C-10.25, C-10.30, & C-10.35.<br>Removed all but first two rectangular plate washers.<br>For steel posts, changed the W structural shape blockouts on the first two posts to 6"x6" tube.<br>Added rub rail.<br>Added 25' of Nested (additional) Steel W Beam. |
| C-10.32 Guard Rail Transition W Beam to Half Barrier (Departure) | New standard. |
| C-10.39 Hardware for W Beam Transition to Concrete Barrier | New standard. |
| C-10.70 Concrete Half Barrier Transition | New standard from portions of old Stds C-10.25, C-10.30, & C-10.35.<br>Revised shape of end of transition to that of bridge concrete barrier transition.<br>Changed the long bolt holes to embedded anchors as per Std B-21.21. |

| REVISED DRAWING | REVISION |
|---|---|
| C-10.74 Hardware for Concrete Barrier Transitions | New standard. |
| C-10.80 Rub Rail | New standard from portions of old Stds C-10.25, C-10.30, C-10.35 & C-10.40.<br>Standard 25' length of rub rail is to be cut, bent, and welded.<br>End of rub rail is attached to last guard rail post with an additional blockout. |
| C-10.83 Hardware for Rub Rail | New standard. |
| C-10.97 Glare Screen | Added details showing location of glare screen on median barrier.<br>Added detail that shows the routing of the top and bottom tension wires.<br>Deleted size of hole for expansion anchor bolts.<br>Added three types of wire ties for fastening the tension wires to the posts.<br>Added a note and detail indicating that the glare screen fabric shall be installed such that it blocks headlight glare.<br>Added details clarifying assembly of the top and bottom bolts.<br>Changed the large Type B washer.<br>Added a detail for when the glare encounters an obstruction. |
| C-12.20 Fence, Chain Link | Corrected bottom clearance dimension in note six.<br>Revised length of corner posts on Type 2 fence.<br>Revised the typical fence location drawing. |

The following existing Construction Standard Drawings are being deleted.

**DELETED DRAWINGS**

C-09.20 Grooving for Concrete Shoulders (Rev. 1/83)

C-10.23 Buried & Bolted Anchor, Timber Post (Rev. 7/85)

C-10.24 Buried & Bolted Anchor, Steel Post (Rev. 7/85)

C-10.25 Transition W Beam (Timber Post) to Concrete Half Barrier (Rev. 3/87)

C-10.30 Transition W Beam (Steel Post) to Concrete Half Barrier (Rev. 6/86)

C-10.35 Transition W Beam (Steel Post) to Concrete Half Barrier, Curb Installation (Rev. 6/86)

C-10.40 Transition W Beam to Concrete Median Barrier (Rev. 6/86)

C-10.45 W Beam BCT Attenuator Assembly (Rev. 7/85)

C-10.50 W Beam BCT Attenuator Assembly (Rev. 7/85)

C-10.55 W Beam BCT Attenuator Assembly (Rev. 7/85)

C-10.96 Glare Screen, Type "P", Concrete Median Barrier (Rev. 1/83)

# CONSTRUCTION STANDARD - INDEX


| DRAWING NO. | TITLE |
|---|---|
| C-01.10 | SYMBOL LEGEND |
| C-01.11 | SYMBOL LEGEND |
| C-01.12 | SYMBOL LEGEND |
| C-01.13 | SYMBOL LEGEND |
| C-01.30 | GENERAL ABBREVIATIONS |
| C-01.31 | GENERAL ABBREVIATIONS |
| C-01.32 | GENERAL ABBREVIATIONS |
| C-02.10 | SLOPES, INTERSTATE |
| C-02.20 | SLOPES, PRIMARY ROADWAYS |
| C-02.30 | SLOPES, SECONDARY/MISC ROADWAYS |
| C-02.40 | PAVEMENT CROWN, PARABOLIC |
| C-03.10 | DITCHES, CHANNELS, DIKES AND BERMS (5 SHEETS) |
| C-04.10 | SPILLWAY, EMBANKMENT |
| C-04.20 | DOWNDRAIN, EMBANKMENT |
| C-04.30 | SPILLWAY, EMBANKMENT LENGTH TABLE |
| C-04.40 | DOWNDRAIN, EMBANKMENT LENGTH TABLE |
| C-04.50 | DOWNDRAIN ENERGY DISSAPATOR |
| C-05.10 | SINGLE CURB, CURB & GUTTER EMBANKMENT CURB |
| C-05.11 | RAMP CURB & GUTTER LAYOUT |
| C-05.12 | CURB & GUTTER TRANSITIONS |
| C-05.20 | CONCRETE DRIVEWAYS & SIDEWALKS |
| C-05.30 | SIDEWALK RAMP (4 SHEETS) |
| C-05.40 | MEDIAN PAVING AND MOSE TRANSITION |
| C-05.50 | CONCRETE BUS BAY |
| C-06.10 | DRIVEWAY & TURNOUT LAYOUTS (2 SHEETS) |
| C-06.20 | GEOMETRICS, DETOUR |
| C-07.01 | PCCP JOINTS (2 SHEETS) |
| C-07.02 | LOAD TRANSFER DOWEL ASSEMBLY |
| C-07.03 | MAINLINE PCCP JOINT LOCATIONS (8 SHEETS) |
| C-07.04 | ENTRANCE RAMP PCCP JOINTS |
| C-07.05 | EXIT RAMP PCCP JOINTS |
| C-07.06 | TRENCH BACKFILL AND PAVEMENT REPLACEMENT |
| C-08.10 | RAMP GEOMETRICS |
| C-08.20 | PAVED GORE AREA |
| C-09.10 | GROOVING FOR BITUMINOUS SHOULDERS |

| DRAWING NO. | TITLE |
|---|---|
| C-10.01 | TYPE A GUARD RAIL INSTALLATION, REFLECTOR TAB |
| C-10.02 | TYPE B GUARD RAIL INSTALLATION, REFLECTOR TAB |
| C-10.03 | MEASUREMENT LIMITS FOR W BEAM AND THRIE BEAM SYSTEM |
| C-10.04 | G4(1W) AND G4(2W) BLOCKED OUT W BEAM (TIMBER POST) |
| C-10.05 | G4(1S) AND G4(2S) BLOCKED OUT W BEAM (STEEL POST) |
| C-10.06 | G4(1S-MODIFIED) BLOCKED OUT W BEAM (STEEL POST) WITH SPECIAL CURB AND GUTTER |
| C-10.07 | G9(A) AND G9(B) BLOCKED OUT THRIE BEAM (STEEL POST) |
| C-10.08 | G9(C) BLOCKED OUT THRIE BEAM (STEEL POST) |
| C-10.09 | HALF BARRIER, CAST IN PLACE, SLIP FORM |
| C-10.10 | HALF BARRIER, CAST IN PLACE, FIXED FORM |
| C-10.11 | HALF BARRIER, PRECAST |
| C-10.12 | MEDIAN BARRIER, CAST IN PLACE, SLIP FORM |
| C-10.13 | MEDIAN BARRIER, CAST IN PLACE, FIXED FORM |
| C-10.14 | MEDIAN BARRIER, PRECAST |
| C-10.15 | FLARED BREAKAWAY CABLE TERMINAL ASSEMBLY (TIMBER POST) |
| C-10.16 | FLARED BREAKAWAY CABLE TERMINAL ASSEMBLY (STEEL POST) |
| C-10.17 | BCT ASSEMBLY STEEL |
| C-10.18 | BCT ASSEMBLY TIMBER |
| C-10.19 | GUARDRAIL ASSEMBLY (2 SHEETS) |
| C-10.20 | BARRIER DETAILS AT PIERS |
| C-10.21 | GUARD RAIL ANCHOR ASSEMBLY STEEL TERMINAL POST |
| C-10.22 | GUARD RAIL ANCHOR ASSEMBLY TIMBER TERMINAL POST |
| C-10.28 | NESTED STEEL W BEAM (2 SHEETS) |
| C-10.29 | BOLTED ANCHOR GUARD RAIL (2 SHEETS) |
| C-10.30 | GUARD RAIL TRANSITION, W BEAM TO CONCRETE HALF BARRIER (APPROACH) (3 SHEETS) |
| C-10.31 | GUARD RAIL TRANSITION, W BEAM TO CONCRETE HALF BARRIER (APPROACH) (CURB) (3 SHEETS) |
| C-10.32 | GUARD RAIL TRANSITION, W BEAM TO CONCRETE HALF BARRIER (DEPARTURE) (3 SHEETS) |
| C-10.39 | HARDWARE FOR W BEAM TRANSITION TO CONCRETE BARRIER |
| C-10.70 | CONCRETE HALF BARRIER TRANSITION (4 SHEETS) |
| C-10.74 | HARDWARE FOR CONCRETE BARRIER TRANSITIONS |
| C-10.80 | RUB RAIL (2 SHEETS) |
| C-10.83 | HARDWARE FOR RUB RAIL |
| C-10.97 | GLARE SCREEN, CONCRETE MEDIAN BARRIER (3 SHEETS) |
| C-10.98 | BARRIER TRANSITION - TANGENT TYPES A & B (2 SHEETS) |
| C-10.99 | BARRIER TRANSITION - CURVE |
| C-11.10 | ROADWAY CATTLE GUARD - FOOTING TYPE |
| C-11.11 | ROADWAY CATTLE GUARD - GRILL & GRILL CLAMP DETAIL |
| C-11.12 | ROADWAY CATTLE GUARD - FOOTING TYPE, MISC. DETAILS |
| C-11.20 | CATTLE GUARD, DRAINAGE |
| C-11.30 | CATTLE GUARD, RAILROAD |
| C-12.10 | FENCE, WOVEN AND BARBED WIRE WITH GATES (5 SHEETS) |
| C-12.20 | FENCE, CHAIN LINK TYPES 1 AND 2 WITH GATES (3 SHEETS) |
| C-12.30 | CHAINLINK CABLE BARRIER (3 SHEETS) |

| NO | DESCRIPTION OF REVISIONS | MADE BY | DATE |
|---|---|---|---|
| 1 | REMOVED NOTE | PNB | 3/94 |
| 2 | ADDED SLOPE ROUNDING | PNB | 3/94 |
| 3 | | | |
| 4 | | | |

## GENERAL NOTES

1. Dimensions of ditches shall be shown on the plans, as bottom width, depth and length.
2. Ditches shall be constructed with a minimum grade to prevent erosion. Ditch outlet treatment shall be as provided on plans.

①

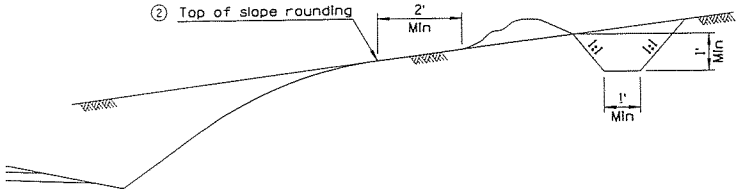


CROWN DITCH

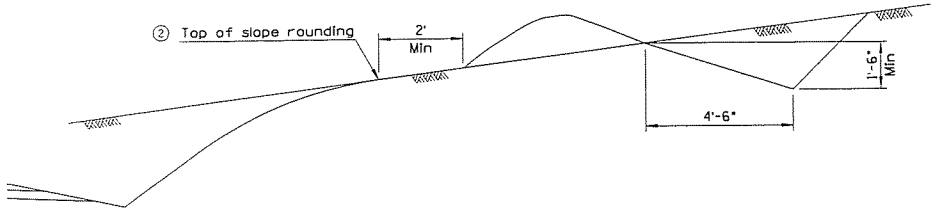


GRADER DITCH

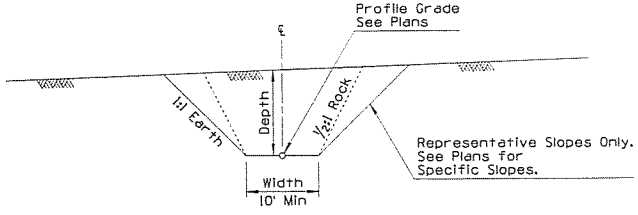


CHANNEL

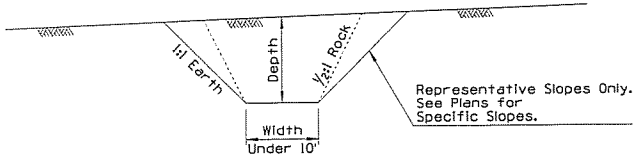


DITCH

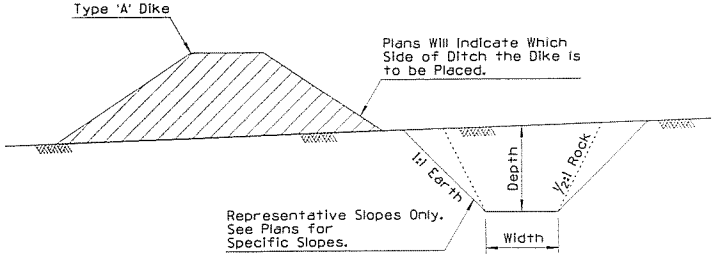


DITCH AND DIKE

| | | |
|---|---|---|
| DESIGN APPROVED: Terry H. Otterness | STATE OF ARIZONA<br>DEPARTMENT OF TRANSPORTATION<br>DIVISION OF HIGHWAYS<br>STANDARD DRAWINGS | REV. 3/94 |
| APPROVED FOR DISTRIBUTION: [signature] | DITCHES, CHANNELS, DIKES AND BERMS<br>DITCHES AND CHANNELS | DRAWING NO. C-03.10<br>Sheet 1 of 5 |

| NO | DESCRIPTION OF REVISIONS | MADE BY | DATE |
|---|---|---|---|
| 1 | MODIFIED SLOPE | PNB | 3/94 |
| 2 | MODIFIED INSTALLATION DETAIL | PNB | 3/94 |
| 3 | ADDED PERSPECTIVE VIEW | PNB | 3/94 |
| 4 | | | |

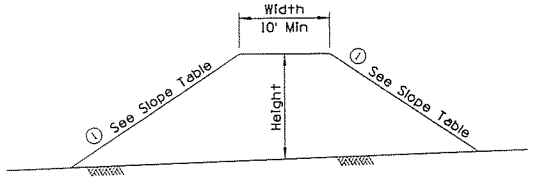


TYPE A DIKE

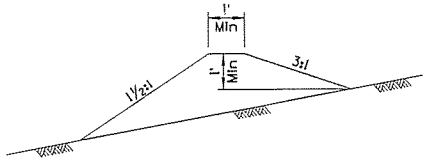


CROWN DIKE

## GENERAL NOTES

1. Dimensions of dikes shall be shown on the plans as top width, height, length and top of dike elevation.
2. Dike side slopes outside the recovery area shall be shown on the plans.

| SLOPE TABLE | | |
|---|---|---|
| Inside Recovery Area | Outside Recovery Area | |
| | Desirable | Maximum |
| 10:1 | 4:1 | 1½:1 |

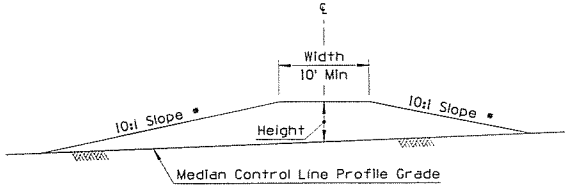


TYPE B TRANSVERSE MEDIAN DIKE

* Slope relative to grade of median at intersection with toe

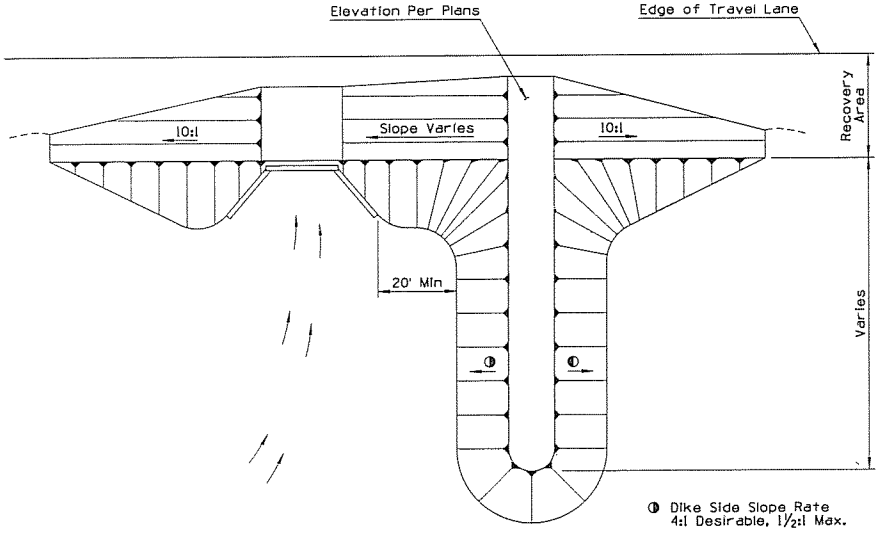


② TYPICAL DIKE INSTALLATION AT STRUCTURE

Place dikes at structures to create water cushion.

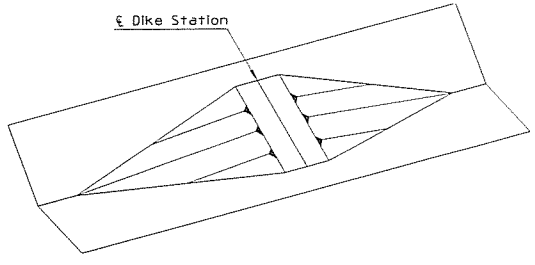


③ TYPICAL TRANSVERSE MEDIAN DIKE INSTALLATION

| | | |
|---|---|---|
| DESIGN APPROVED Terry H. Otterness | STATE OF ARIZONA<br>DEPARTMENT OF TRANSPORTATION<br>DIVISION OF HIGHWAYS<br>STANDARD DRAWINGS | REV. 3/94 |
| APPROVED FOR DISTRIBUTION | DITCHES, CHANNELS, DIKES AND BERMS<br>DIKES | DRAWING NO. C-03.10<br>Sheet 2 of 5 |

| NO | DESCRIPTION OF REVISIONS | MADE BY | DATE |
|---|---|---|---|
| 1 | | | |
| 2 | | | |
| 3 | | | |
| 4 | | | |

## GENERAL NOTES

1. Dimensions for ditch dikes shall be shown on the plans as dike stationing, height, length, dike back slope and top of dike elevation.
2. Dimensions for cut ditch widening shall be shown on the plans as beginning and ending stations.

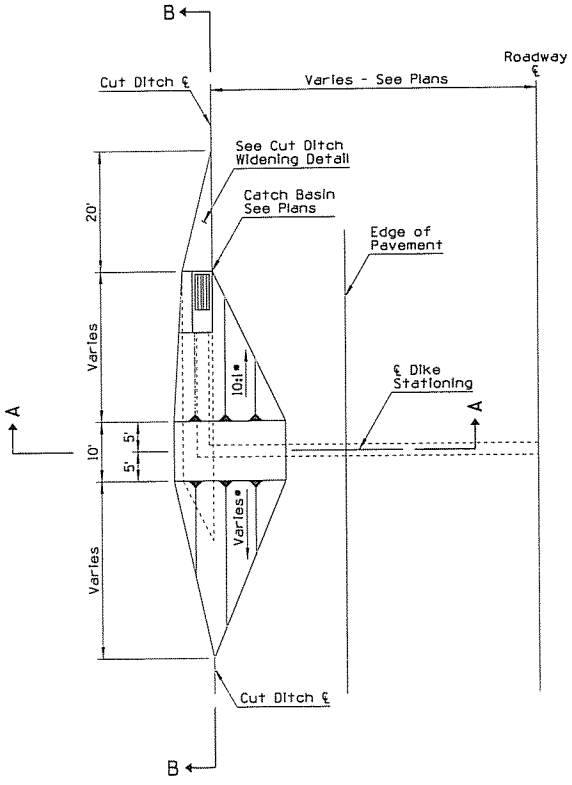


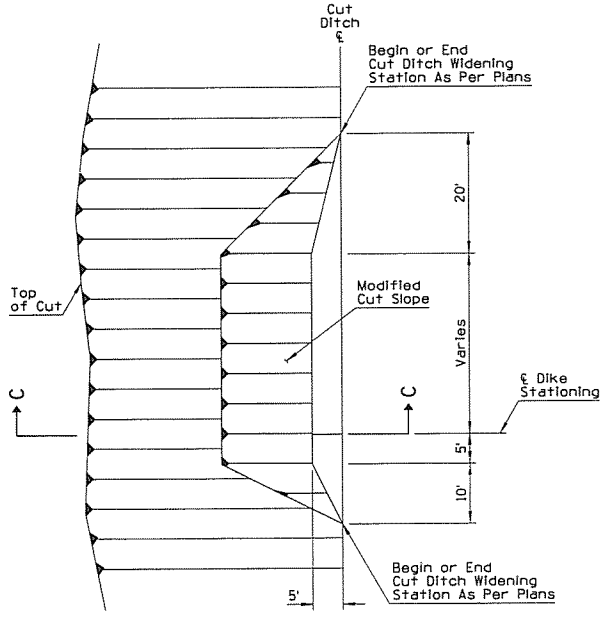


CUT DITCH WIDENING DETAIL

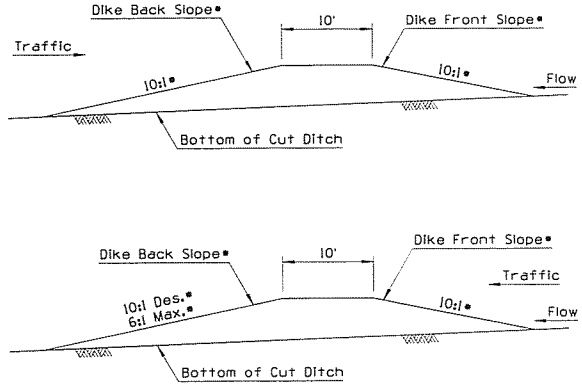


SECTION B-B

* Slope relative to grade of cut ditch at intersection with toe

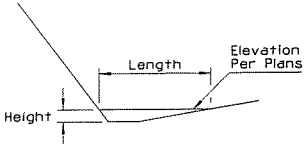


SECTION A-A

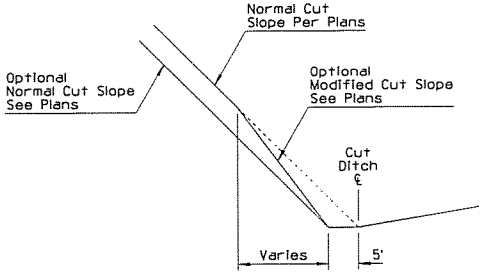


SECTION C-C

| | | |
|---|---|---|
| DESIGN APPROVED Terry H. Otterness | STATE OF ARIZONA<br>DEPARTMENT OF TRANSPORTATION<br>DIVISION OF HIGHWAYS<br>STANDARD DRAWINGS | 3/94 |
| APPROVED FOR DISTRIBUTION | DITCHES, CHANNELS, DIKES AND BERMS<br>DITCH DIKE | DRAWING NO. C-03.10<br>Sheet 3 of 5 |

| NO. | DESCRIPTION OF REVISIONS | MADE BY | DATE |
|---|---|---|---|
| 1 | | | |
| 2 | | | |
| 3 | | | |
| 4 | | | |

## GENERAL NOTES

1. Pipe berms not required when pipe projection is protected by guard rail.
2. Berm construction similar for multiple pipe installation and for pipes without end sections.
3. Berm construction shown is for pipe extensions. Berm construction similar for new pipe installation. See Pipe Berm Requirement Detail. If Point A is within the recovery area, then a pipe berm is required and Point B is set at the edge of the recovery area.

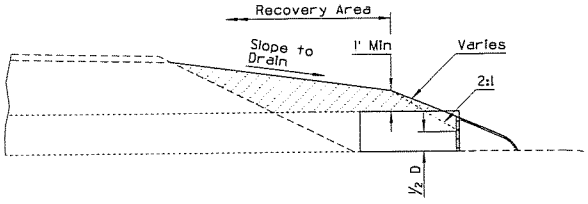


SECTION A-A (WITH END SECTION)

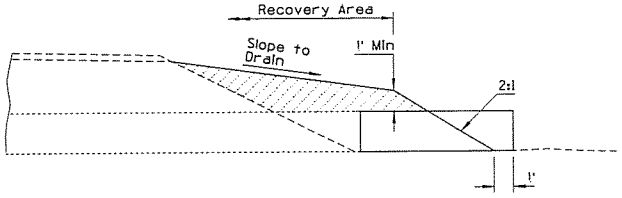


SECTION A-A (WITHOUT END SECTION)

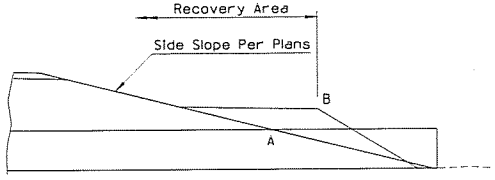


PIPE BERM REQUIREMENT DETAIL

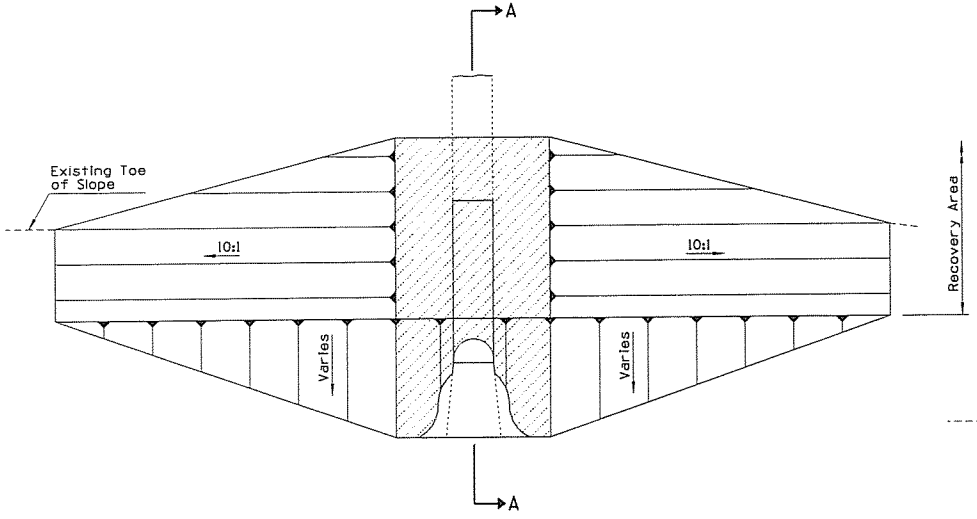


STRAIGHT PIPE PLAN

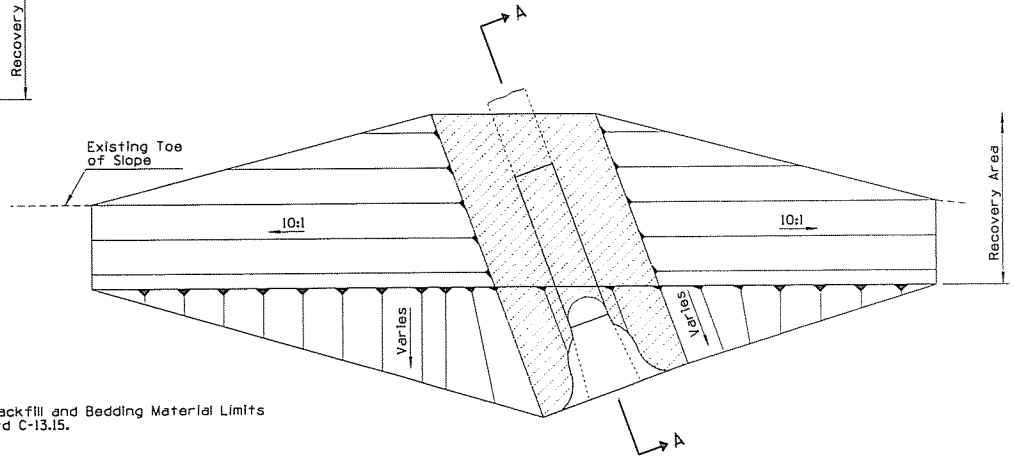


SKEWED PIPE PLAN

Pipe Backfill and Bedding Material Limits
See Std C-13.15.

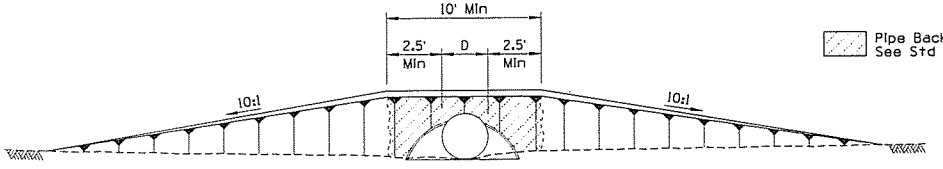


ELEVATION

NOTE:
Single Pipe Installation: D = Outside Diameter of Pipe
Multiple Pipe Installation: D = Outside Edge to Outside Edge of Pipes

| | | |
|---|---|---|
| DESIGN APPROVED<br>Terry H. Otterness | STATE OF ARIZONA<br>DEPARTMENT OF TRANSPORTATION<br>DIVISION OF HIGHWAYS<br>STANDARD DRAWINGS | 3/94 |
| APPROVED FOR DISTRIBUTION | DITCHES, CHANNELS, DIKES AND BERMS<br>PIPE BERMS | DRAWING NO.<br>C-03.10<br>Sheet 4 of 5 |

| NO | DESCRIPTION OF REVISIONS | MADE BY | DATE |
|---|---|---|---|
| 1 | | | |
| 2 | | | |
| 3 | | | |
| 4 | | | |

## GENERAL NOTES

1. Berm construction similar for box culvert and pipe with headwall.
2. Berm construction shown is for extension of existing facilities. Berm construction similar for new facilities.

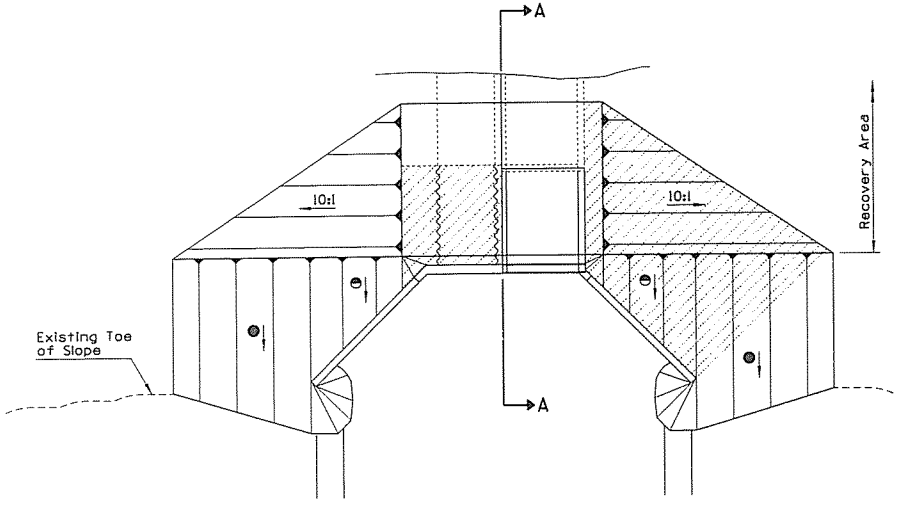


STRAIGHT HEADWALL PLAN

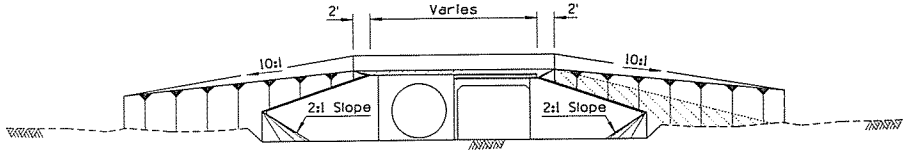


ELEVATION

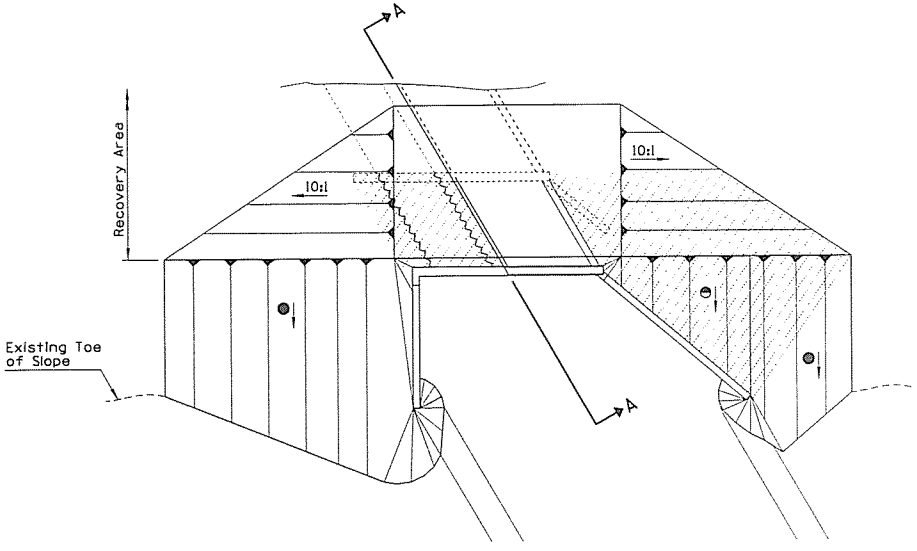


SKEWED HEADWALL PLAN

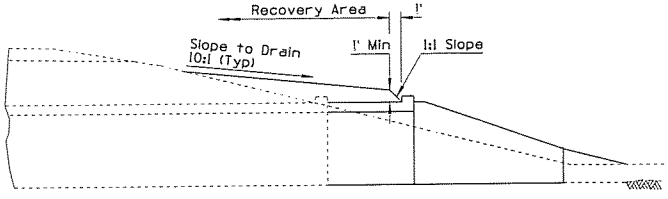


SECTION A-A (FOR CBC)

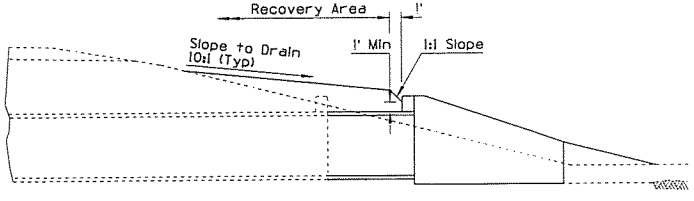


SECTION A-A (FOR PIPE WITH HEADWALL)

◑ Vary slope. Slope shall match to top of wing wall.

● Slope shall match wing wall design slope (2:1, 4:1, or 6:1).

Structure Backfill Limits See Std B-19.50

| | | |
|---|---|---|
| DESIGN APPROVED | STATE OF ARIZONA<br>DEPARTMENT OF TRANSPORTATION<br>DIVISION OF HIGHWAYS<br>STANDARD DRAWINGS | 3/94 |
| APPROVED FOR DISTRIBUTION | DITCHES, CHANNELS, DIKES AND BERMS<br>HEADWALL BERMS | DRAWING NO. C-03.10<br>Sheet 5 of 5 |

| NO | DESCRIPTION OF REVISIONS | MADE BY | DATE |
|---|---|---|---|
| 1 | ADDED NOTE | PNG | 3/94 |
| 2 | | | |
| 3 | | | |
| 4 | | | |

## GENERAL NOTES

1. Top of curb (TC) and top of ramp elevations shown are in relation to the gutter. Gutter=0".
2. See Std C-05.10, C-05.11 and C-05.20 for joint requirements.
3. When curb heights of 6" are shown on plans, use dimensions shown in ( )'s.
4. If field modification is required, bottom width shall be 4' minimum, as per ADA requirements.

● Use type A1 curb if median is to be landscaped.

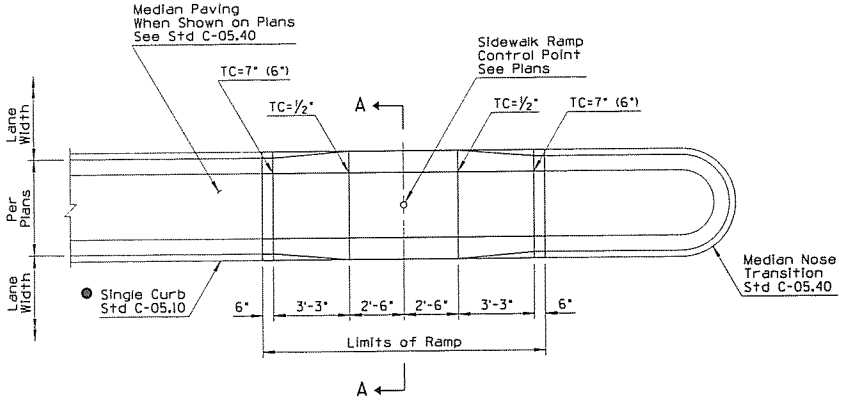


PLAN

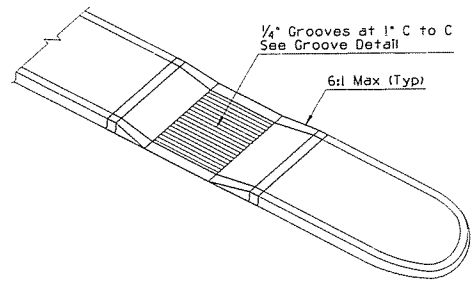


PERSPECTIVE

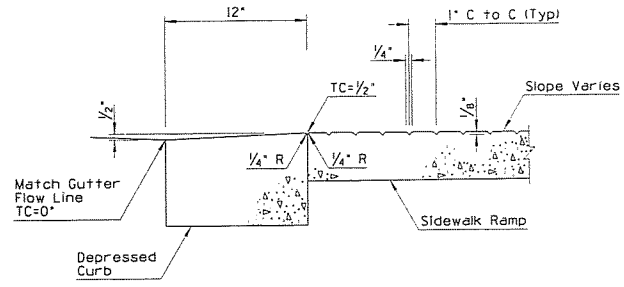


GROOVE DETAIL

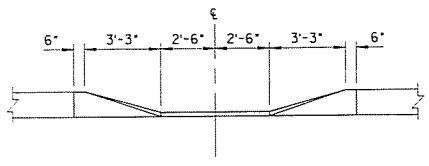


ELEVATION
DEPRESSED CURB AT SIDEWALK RAMP

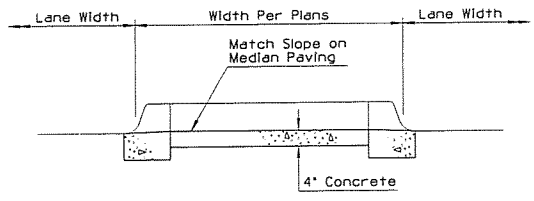


SECTION A-A

| | | |
|---|---|---|
| DESIGN APPROVED<br>APPROVED FOR DISTRIBUTION | STATE OF ARIZONA<br>DEPARTMENT OF TRANSPORTATION<br>DIVISION OF HIGHWAYS<br>STANDARD DRAWINGS | REV.<br>3/94 |
| | SIDEWALK RAMP<br>TYPE 1 | DRAWING NO.<br>C-05.30<br>Sheet 1 of 4 |

| NO | DESCRIPTION OF REVISIONS | MADE BY | DATE |
|---|---|---|---|
| 1 | ADDED NOTE | PNB | 3/94 |
| 2 | MODIFIED NOTE | PNB | 3/94 |
| 3 | | | |
| 4 | | | |

## GENERAL NOTES

1. Top of curb (TC) and top of ramp elevations shown are in relation to the gutter and are located radially. Gutter=0".
2. See Std C-05.10, C-05.11 and C-05.20 for joint requirements.
2. 3. When curb heights of 6" or less are shown on plans, use dimensions shown in ( )'s.
1. 4. When curb heights of 7" or more are shown on plans, see plans and ADA requirements.

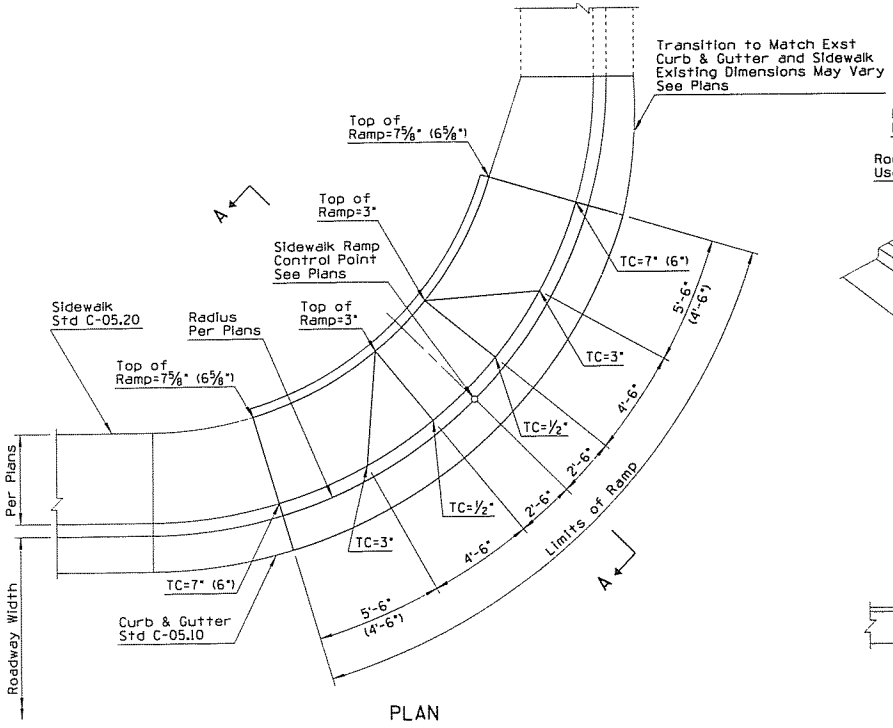


PLAN

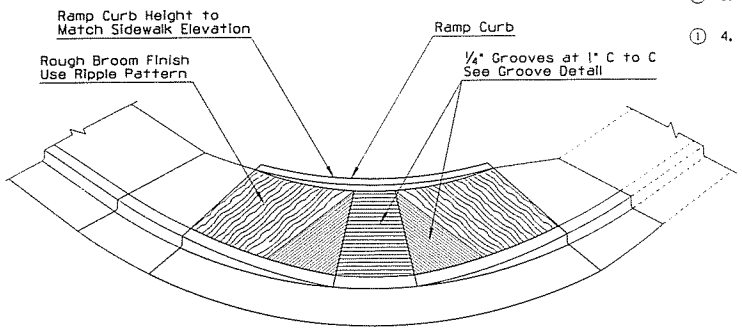


PERSPECTIVE

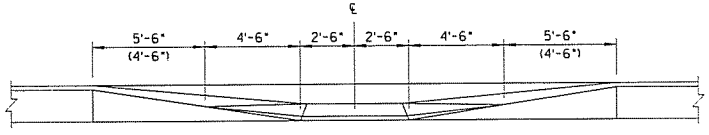


ELEVATION
DEPRESSED CURB AT SIDEWALK RAMP

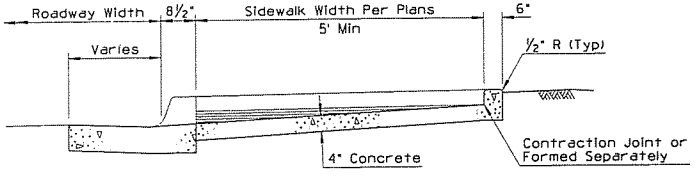


SECTION A-A

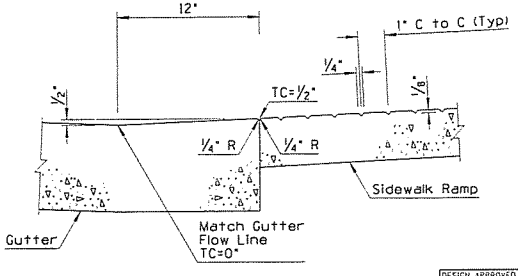


GROOVE DETAIL

| | | |
|---|---|---|
| DESIGN APPROVED | STATE OF ARIZONA<br>DEPARTMENT OF TRANSPORTATION<br>DIVISION OF HIGHWAYS<br>STANDARD DRAWINGS | REV. 3/94 |
| APPROVED FOR DISTRIBUTION | SIDEWALK RAMP<br>TYPE 2 | DRAWING NO. C-05.30<br>Sheet 2 of 4 |

| NO | DESCRIPTION OF REVISIONS | MADE BY | DATE |
|---|---|---|---|
| 1 | ADDED NOTE | PNB | 3/94 |
| 2 | MODIFIED NOTE | PNB | 3/94 |
| 3 | | | |
| 4 | | | |

## GENERAL NOTES

1. Top of curb (TC) and top of ramp elevations shown are in relation to the gutter. Gutter=0".
2. See Std C-05.10, C-05.11 and C-05.20 for joint requirements
2. 3. When curb heights of 6" or less are shown on plans, use dimensions shown in ( )'s.
1. 4. When curb heights of 7" or more are shown on plans, see plans and ADA requirements.

● For sidewalk widths greater than 6'-5", the overall sidewalk ramp width shall match the sidewalk width.

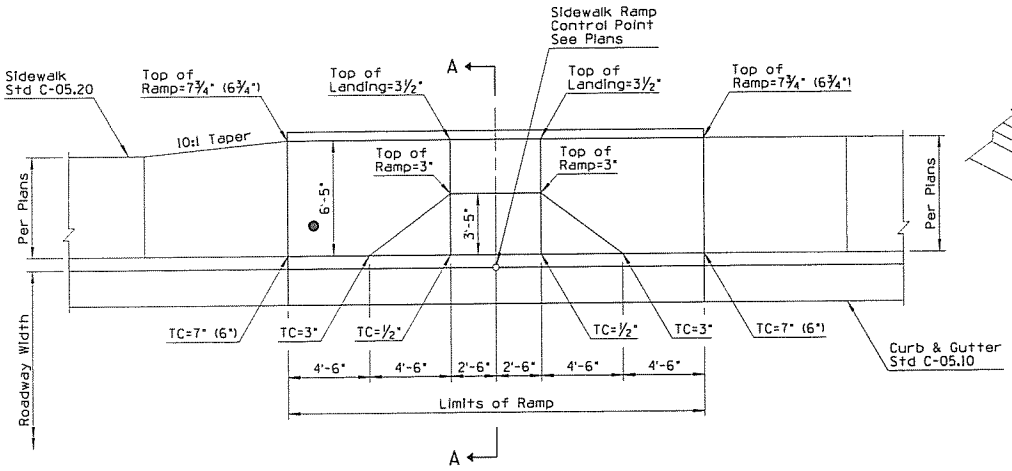


PLAN

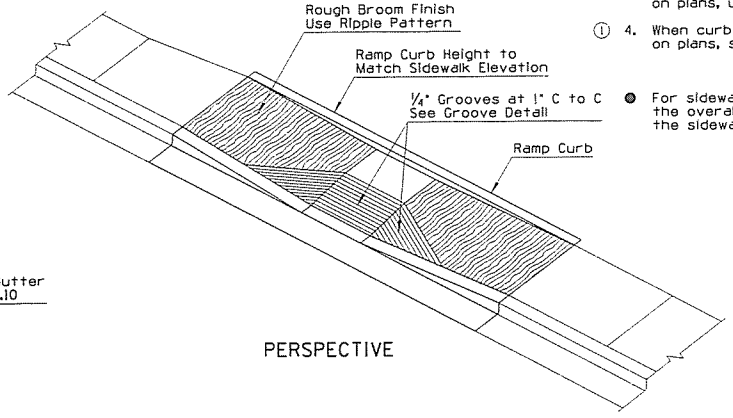


PERSPECTIVE

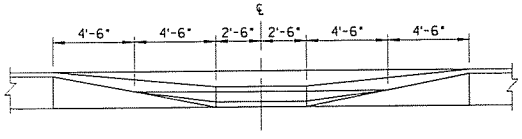


ELEVATION
DEPRESSED CURB AT SIDEWALK RAMP

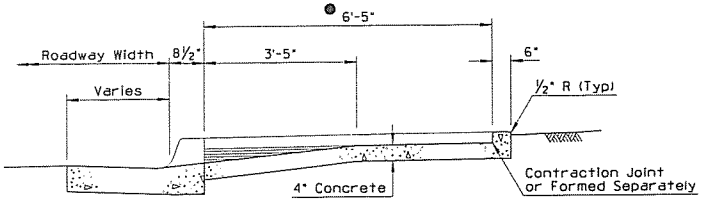


SECTION A-A

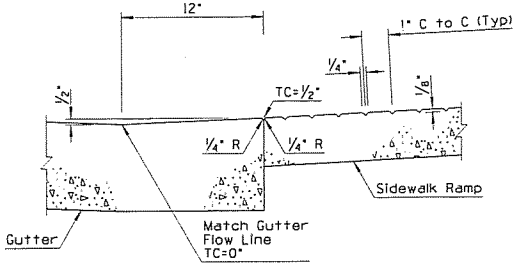


GROOVE DETAIL

| | | |
|---|---|---|
| DESIGN APPROVED Terry H. Otterness | STATE OF ARIZONA DEPARTMENT OF TRANSPORTATION DIVISION OF HIGHWAYS STANDARD DRAWINGS | 3/94 |
| APPROVED FOR DISTRIBUTION | 1 SIDEWALK RAMP TYPE 4 | DRAWING NO. C-05.30 Sheet 4 of 4 |

| NO. | DESCRIPTION OF REVISIONS | MADE BY | DATE |
|---|---|---|---|
| 1 | REVISED DETAIL TO SHOW ALL PCCP | PNB | 3/94 |
| 2 | REVISED DETAIL TO SHOW AC & PCCP | PNB | 3/94 |
| 3 | DELETED EXPANSION MATERIAL | PNB | 3/94 |
| 4 | ADDED NOTE ON PAVEMENT SLOPE | PNB | 3/94 |

## GENERAL NOTES

(4) 1. Joints are generally shown with pavement sloping toward the joint. Joints are similar with pavement sloping away from the joint.

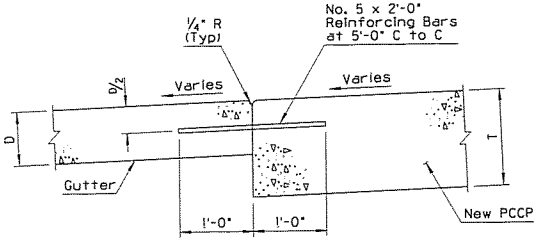


### CURB & GUTTER JOINT
G Joint

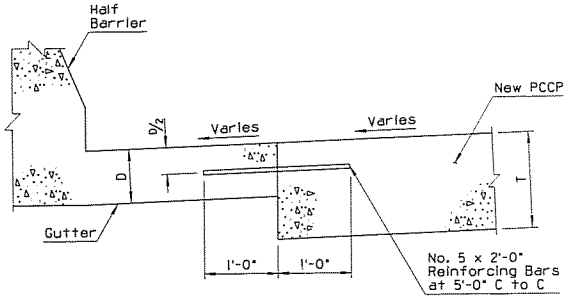


### HALF BARRIER JOINT
B Joint

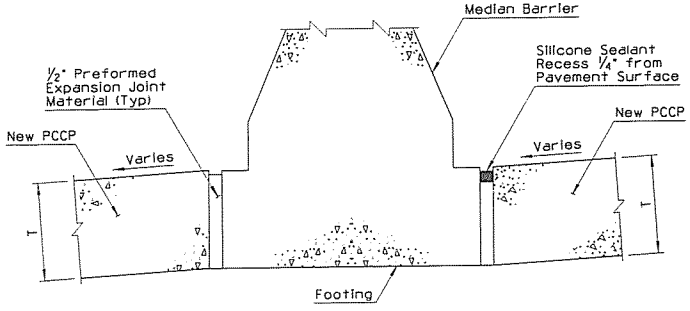


### (1) MEDIAN BARRIER JOINT
B Joint
PCCP On Both Sides of Barrier

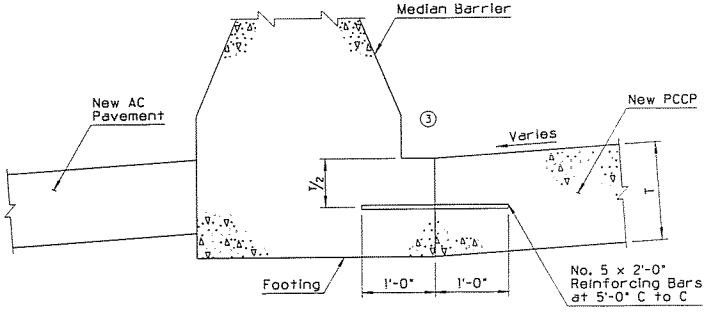


### (2) MEDIAN BARRIER JOINT
B Joint
AC Pavement On Back Side of Barrier

## JOINT ABBREVIATIONS

G - Gutter Joint
T - PCCP Thickness
D - Gutter Thickness
B - Barrier Joint

| | | |
|---|---|---|
| DESIGN APPROVED | STATE OF ARIZONA<br>DEPARTMENT OF TRANSPORTATION<br>DIVISION OF HIGHWAYS<br>STANDARD DRAWINGS | 3/94 |
| APPROVED FOR DISTRIBUTION | PCCP JOINTS | DRAWING NO. C-07.01<br>Sheet 2 of 2 |

| NO | DESCRIPTION OF REVISIONS | MADE BY | DATE |
|---|---|---|---|
| 1 | NEW STD FROM C-10.23 & C-10.24 | PMB | 3/94 |
| 2 | | | |
| 3 | | | |
| 4 | | | |

## GENERAL NOTES

1. ● - Indicates ARTBA designation.
2. See Std C-10.04 and C-10.05 for additional information and dimensions.

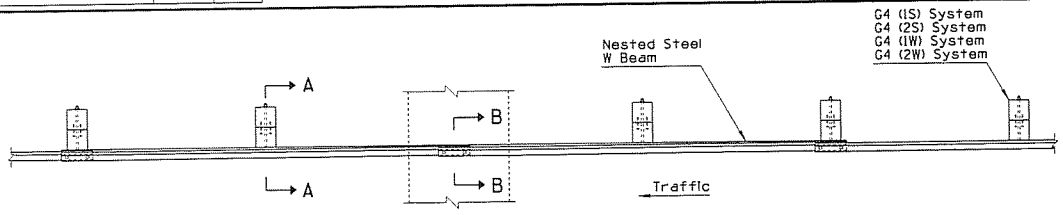


PLAN

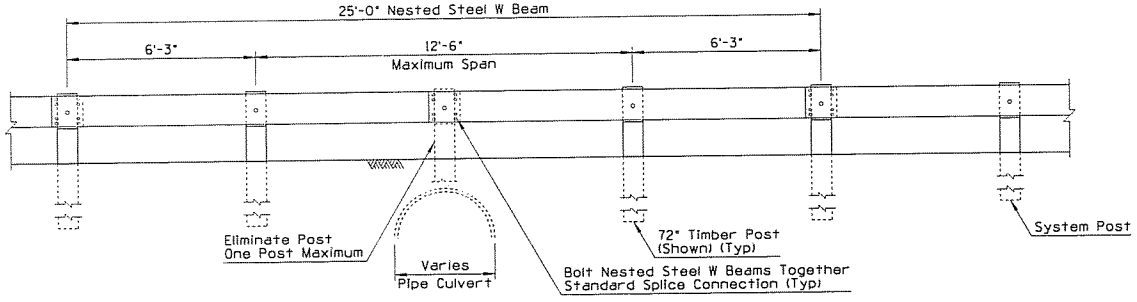


ELEVATION
NESTED STEEL W BEAM - TYPE 1 - SHORT SPAN
(Splice Connection Inside Span) Length = 25'-0"

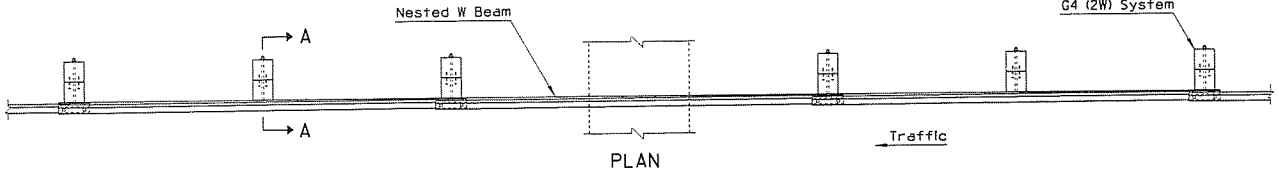


PLAN

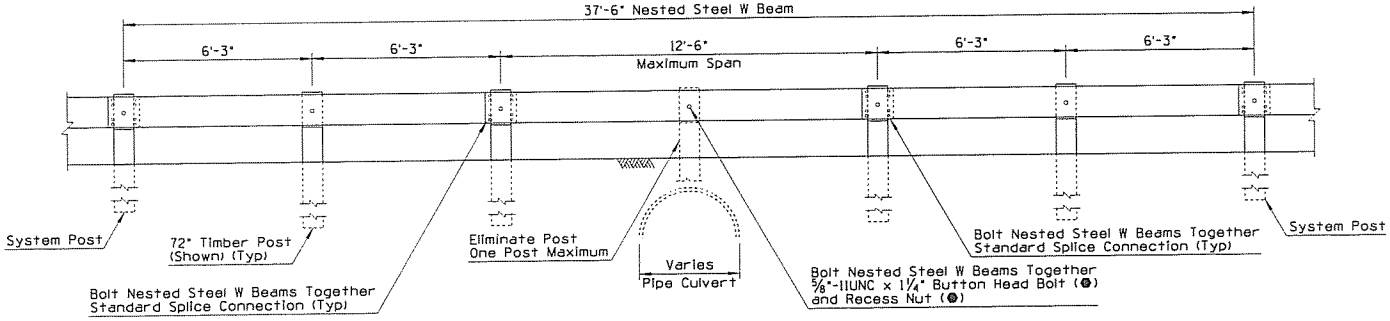


ELEVATION
NESTED STEEL W BEAM - TYPE 2 - SHORT SPAN
(Splice Connection Outside Span) Length = 37'-6"

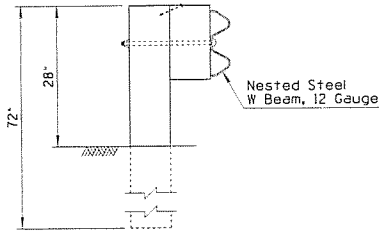


SECTION A-A

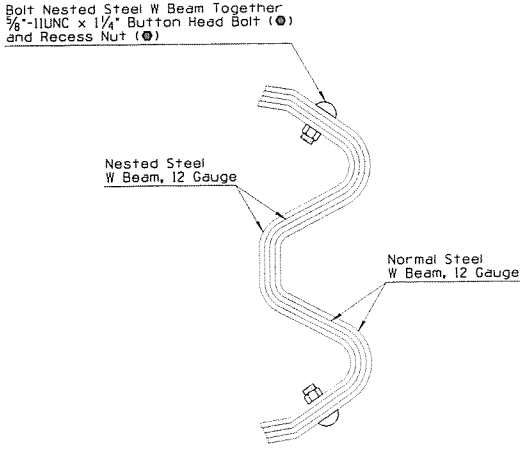


SECTION B-B

| | | |
|---|---|---|
| DESIGN APPROVED<br>Terry H. Otterness | STATE OF ARIZONA<br>DEPARTMENT OF TRANSPORTATION<br>DIVISION OF HIGHWAYS<br>STANDARD DRAWINGS | 3/94 |
| APPROVED FOR DISTRIBUTION<br>Roger A. Thomas | ① NESTED STEEL W BEAM<br>SHORT SPAN - TYPE 1 AND 2 | DRAWING NO.<br>C-10.28<br>Sheet 1 of 2 |

| NO | DESCRIPTION OF REVISIONS | MADE BY | DATE |
|---|---|---|---|
| 1 | NEW STD FROM C-10.23 & C-10.24 | PNB | 3/94 |
| 2 | | | |
| 3 | | | |
| 4 | | | |

## GENERAL NOTES

1. Use Type 3 Nested Steel W Beam to span downdrain or spillway inlets as shown in the plan view.
2. Use Type 3 to span multiple obstructions as shown in the elevation view.

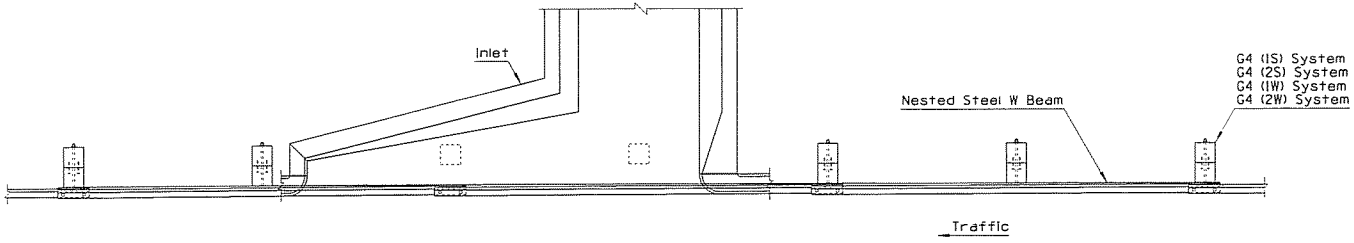


PLAN

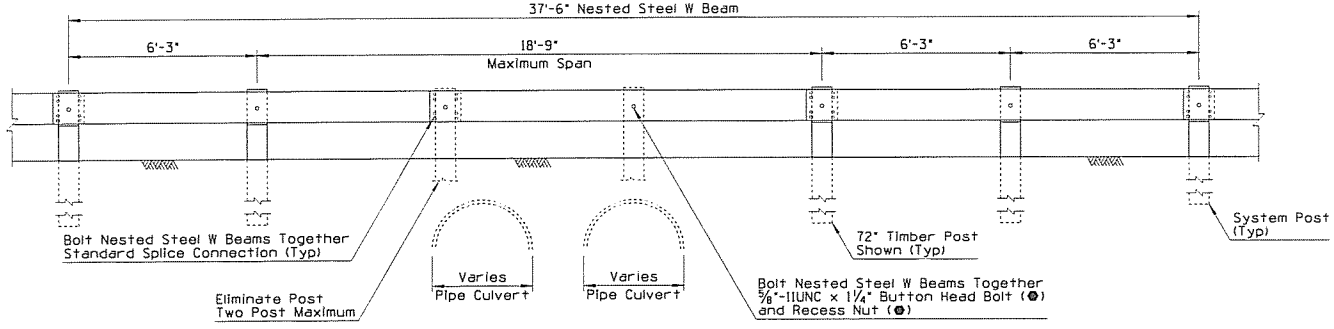


ELEVATION

NESTED STEEL W BEAM - TYPE 3 - LONG SPAN
Length = 37'-6"

| | | |
|---|---|---|
| DESIGN APPROVED<br>APPROVED FOR DISTRIBUTION | STATE OF ARIZONA<br>DEPARTMENT OF TRANSPORTATION<br>DIVISION OF HIGHWAYS<br>STANDARD DRAWINGS | 3/94 |
| | ① NESTED STEEL W BEAM<br>LONG SPAN - TYPE 3 | DRAWING NO.<br>C-10.28<br>Sheet 2 of 2 |

| NO. | DESCRIPTION OF REVISIONS | MADE BY | DATE |
|---|---|---|---|
| 1 | NEW STD FROM C-10.23 & C-10.24 | PHB | 3/94 |
| 2 | | | |
| 3 | | | |
| 4 | | | |

## GENERAL NOTES

1. See Std C-10.04 and C-10.05 for additional information and dimensions.

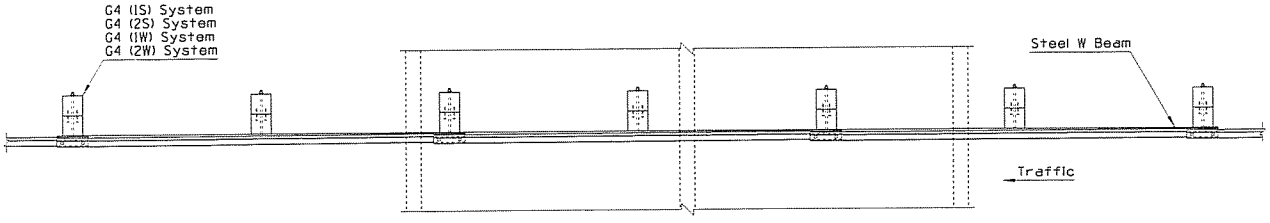


PLAN

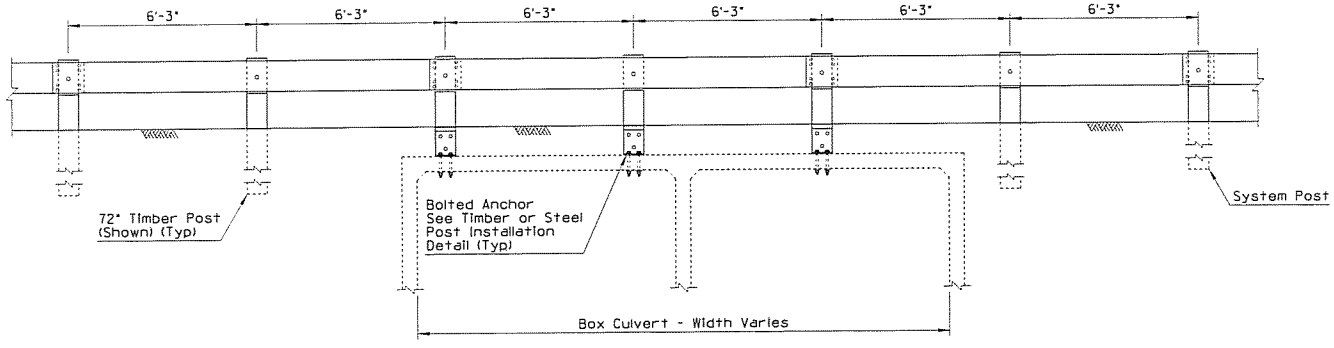


ELEVATION

BOLTED ANCHOR
BOX CULVERT INSTALLATION

| | | |
|---|---|---|
| DESIGN APPROVED | STATE OF ARIZONA<br>DEPARTMENT OF TRANSPORTATION<br>DIVISION OF HIGHWAYS<br>STANDARD DRAWINGS | 3/94 |
| APPROVED FOR DISTRIBUTION | 1 BOLTED ANCHOR GUARD RAIL | DRAWING NO. C-10.29<br>Sheet 1 of 2 |

| NO | DESCRIPTION OF REVISIONS | MADE BY | DATE |
|---|---|---|---|
| 1 | NEW STD FROM C-10.23 & C-10.24 | PNB | 3/94 |
| 2 | | | |
| 3 | | | |
| 4 | | | |

## GENERAL NOTES

1. Drill through top of box culvert with rotary drill.
2. Bracket may be made of one piece hot bent, or two pieces welded together.
3. Short timber posts anchored to box culvert roof shall be 8" x 8" only.

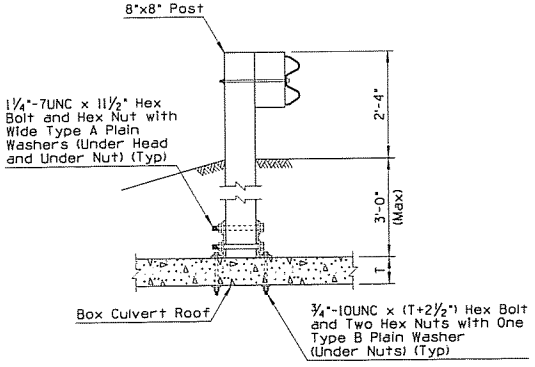


INSTALLATION DETAIL

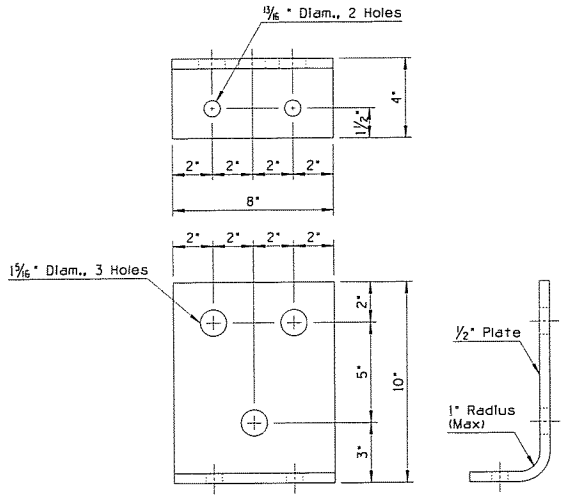


BRACKET DETAIL

BOLTED ANCHOR
TIMBER POST INSTALLATION DETAIL

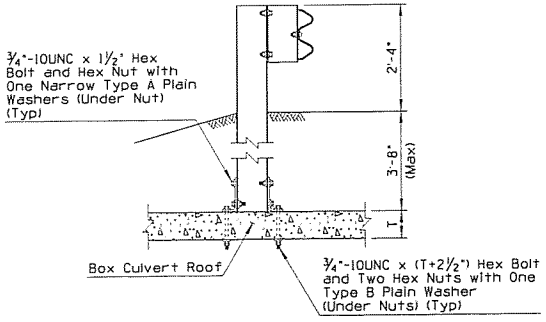


INSTALLATION DETAIL

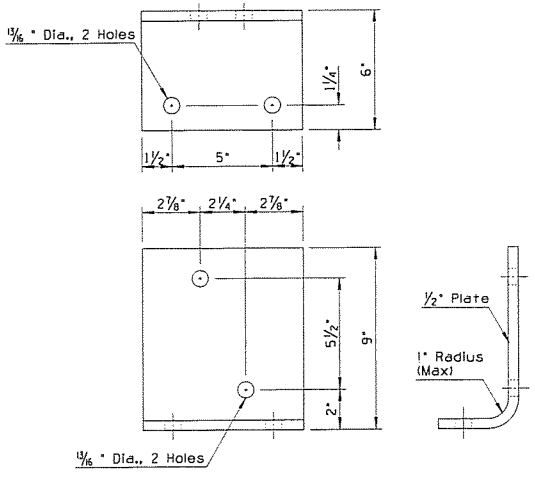


BRACKET DETAIL

BOLTED ANCHOR
STEEL POST INSTALLATION DETAIL

| | | |
|---|---|---|
| DESIGN APPROVED Terry H Otterness | STATE OF ARIZONA<br>DEPARTMENT OF TRANSPORTATION<br>DIVISION OF HIGHWAYS<br>STANDARD DRAWINGS | 3/94 |
| APPROVED FOR DISTRIBUTION ① | BOLTED ANCHOR<br>GUARD RAIL | DRAWING NO. C-10.29<br>Sheet 2 of 2 |

| NO | DESCRIPTION OF REVISIONS | MADE BY | DATE |
|---|---|---|---|
| 1 | | | |
| 2 | | | |
| 3 | | | |
| 4 | | | |

## GENERAL NOTES

● - Indicates ARTBA designation

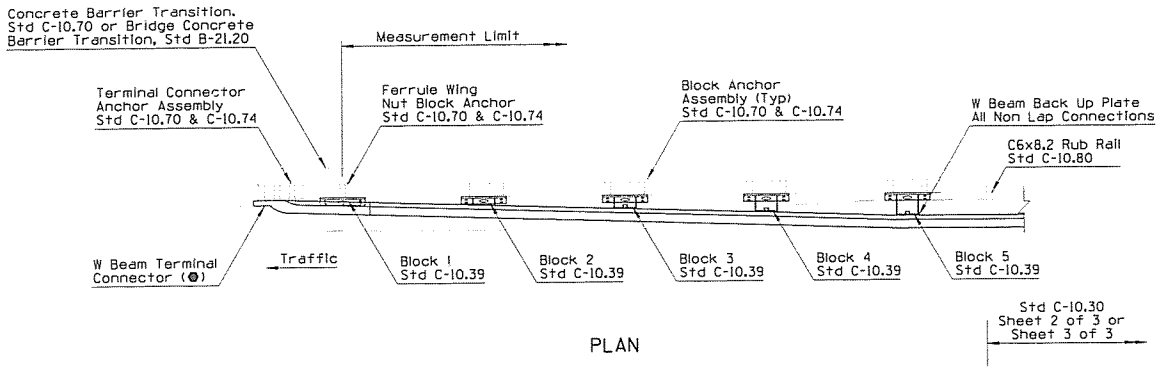


PLAN

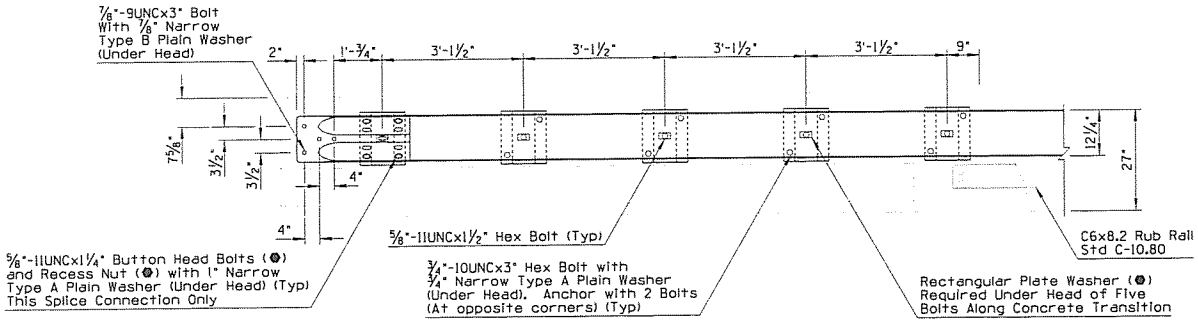


ELEVATION

Guard Rail Transition

Note:
For Notes and Dimensions Not Shown, See Guard Rail Transition Above

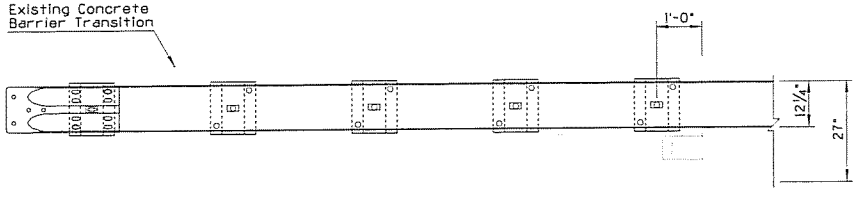


ELEVATION

Guard Rail Transition
To Existing Concrete
Barrier Transition

| | | |
|---|---|---|
| DESIGN APPROVED | STATE OF ARIZONA<br>DEPARTMENT OF TRANSPORTATION<br>DIVISION OF HIGHWAYS<br>STANDARD DRAWINGS | 3/94 |
| APPROVED FOR DISTRIBUTION | GUARD RAIL TRANSITION<br>W BEAM TO CONCRETE HALF BARRIER (APPROACH) | DRAWING NO.<br>C-10.30<br>Sheet 1 of 3 |

| NO. | DESCRIPTION OF REVISIONS | MADE BY | DATE |
|---|---|---|---|
| 1 | | | |
| 2 | | | |
| 3 | | | |
| 4 | | | |

## GENERAL NOTES

❶ - Indicates ARTBA designation

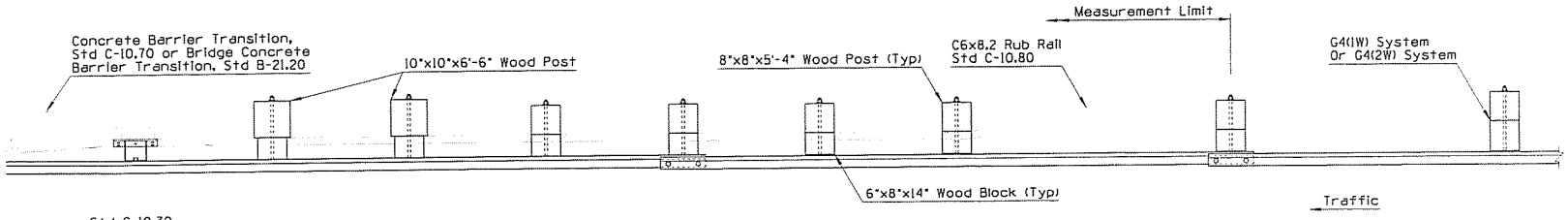


PLAN

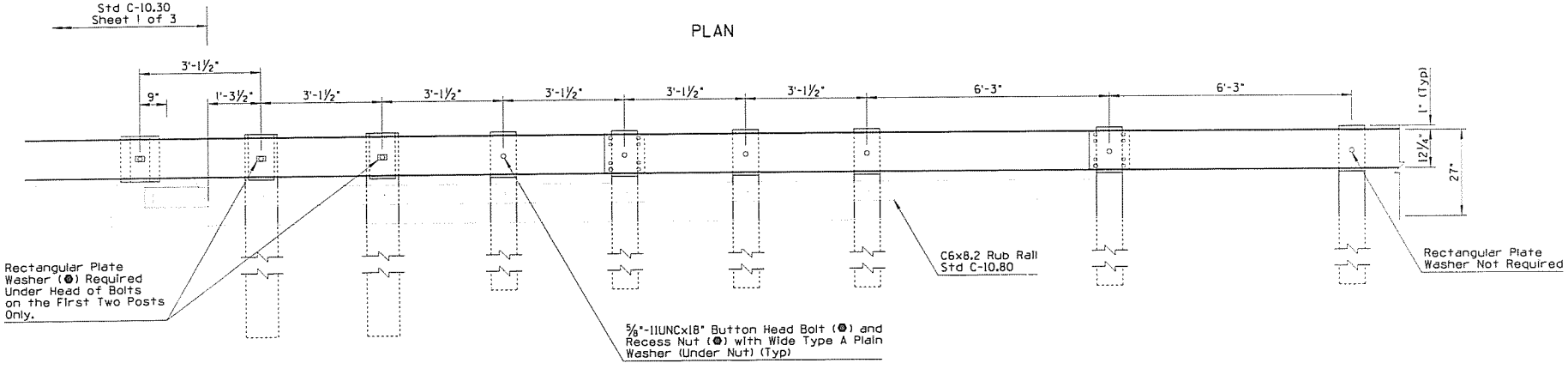


ELEVATION

Guard Rail Transition (Timber Post)

Note:
For Notes and Dimensions Not Shown, See Guard Rail Transition Above.

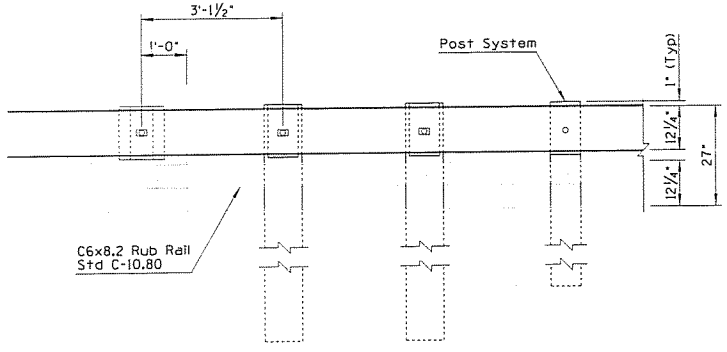


ELEVATION

Guard Rail Transition To Existing Concrete Barrier Transition

| | | |
|---|---|---|
| DESIGN APPROVED | STATE OF ARIZONA<br>DEPARTMENT OF TRANSPORTATION<br>DIVISION OF HIGHWAYS<br>STANDARD DRAWINGS | 3/94 |
| APPROVED FOR DISTRIBUTION | GUARD RAIL TRANSITION<br>W BEAM TO CONCRETE HALF BARRIER (APPROACH) | DRAWING NO.<br>C-10.30<br>Sheet 2 of 3 |

| NO | DESCRIPTION OF REVISIONS | MADE BY | DATE |
|---|---|---|---|
| 1 | | | |
| 2 | | | |
| 3 | | | |
| 4 | | | |

## GENERAL NOTES

⊛ - Indicates ARTBA designation

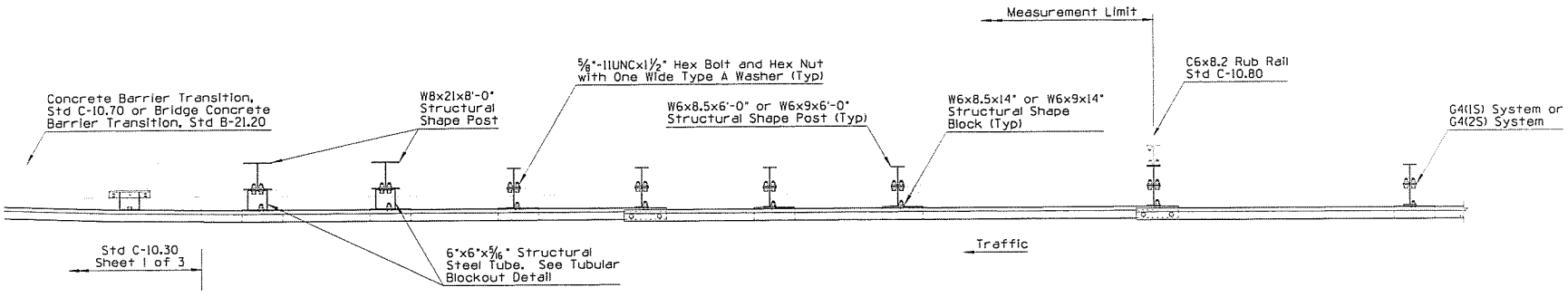


PLAN

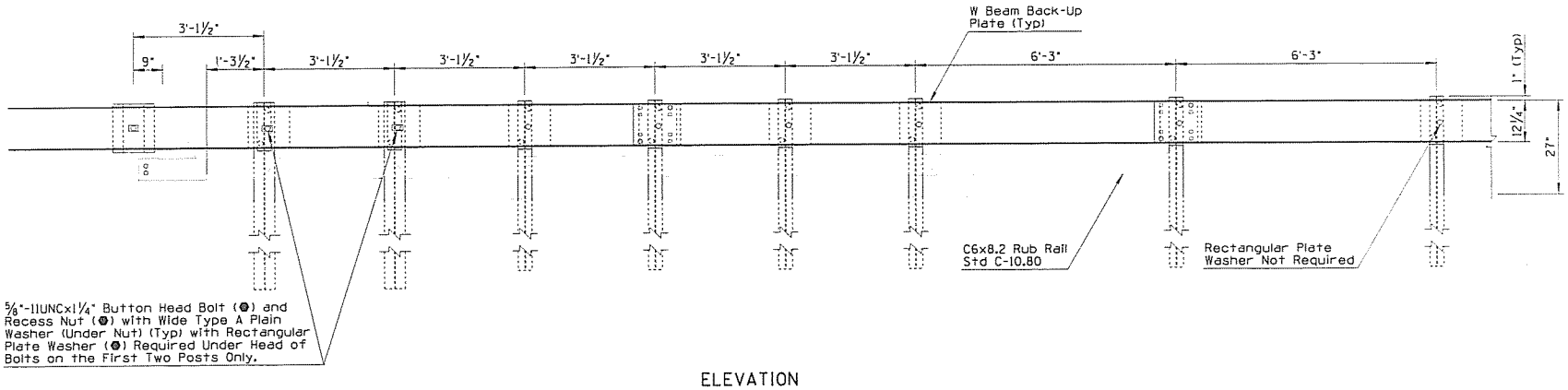


ELEVATION

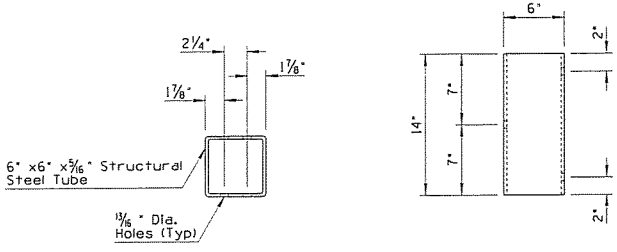


TUBULAR BLOCKOUT DETAIL

Guard Rail Transition
(Steel Post)

| | | |
|---|---|---|
| DESIGN APPROVED | STATE OF ARIZONA<br>DEPARTMENT OF TRANSPORTATION<br>DIVISION OF HIGHWAYS<br>STANDARD DRAWINGS | 3/94 |
| APPROVED FOR DISTRIBUTION | GUARD RAIL TRANSITION,<br>W BEAM TO CONCRETE<br>HALF BARRIER (APPROACH) | DRAWING NO.<br>C-10.30<br>Sheet 3 of 3 |

| NO | DESCRIPTION OF REVISIONS | MADE BY | DATE |
|---|---|---|---|
| 1 | | | |
| 2 | | | |
| 3 | | | |
| 4 | | | |

## GENERAL NOTES

● - Indicates ARTBA designation

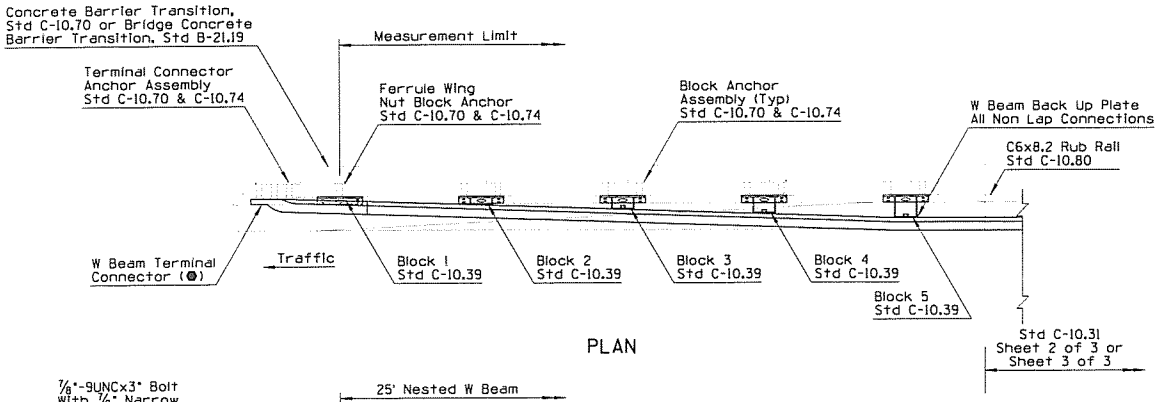


PLAN

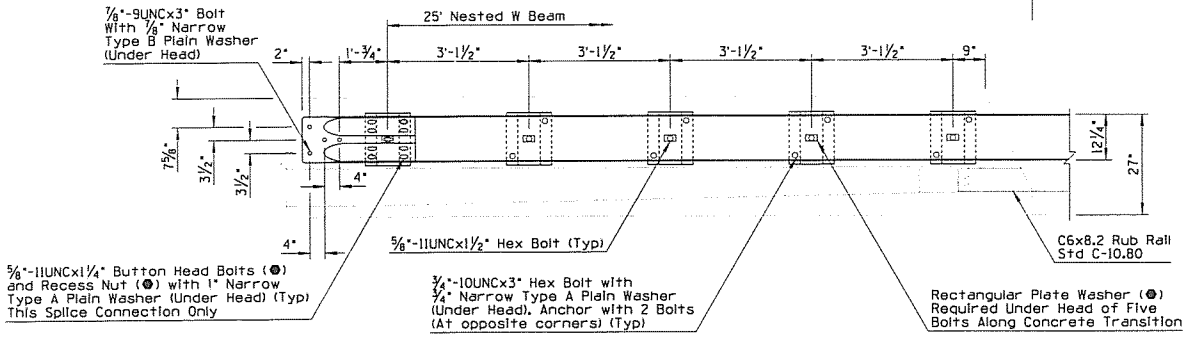


ELEVATION

Guard Rail Transition

Note:
For Notes and Dimensions Not Shown, See Guard Rail Transition Above

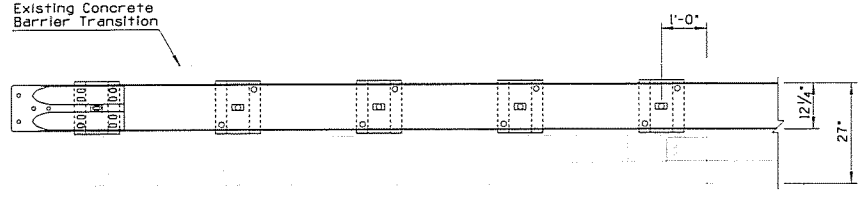


ELEVATION

Guard Rail Transition
To Existing Concrete
Barrier Transition

| | | |
|---|---|---|
| DESIGN APPROVED | STATE OF ARIZONA<br>DEPARTMENT OF TRANSPORTATION<br>DIVISION OF HIGHWAYS<br>STANDARD DRAWINGS | 3/94 |
| APPROVED FOR DISTRIBUTION | GUARD RAIL TRANSITION<br>W BEAM TO CONCRETE HALF<br>BARRIER (APPROACH)(WITH CURB) | DRAWING NO.<br>C-10.31<br>Sheet 1 of 3 |

| NO. | DESCRIPTION OF REVISIONS | MADE BY | DATE |
|---|---|---|---|
| 1 | | | |
| 2 | | | |
| 3 | | | |
| 4 | | | |

## GENERAL NOTES

● - Indicates ARTBA designation

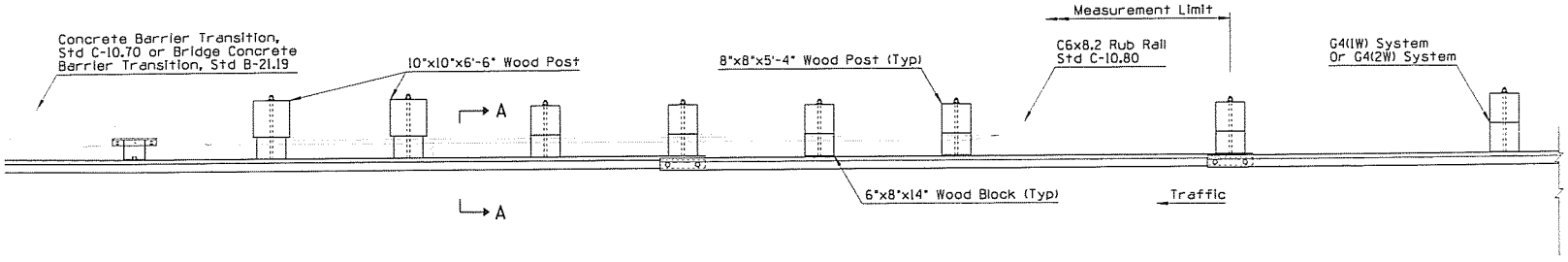


PLAN

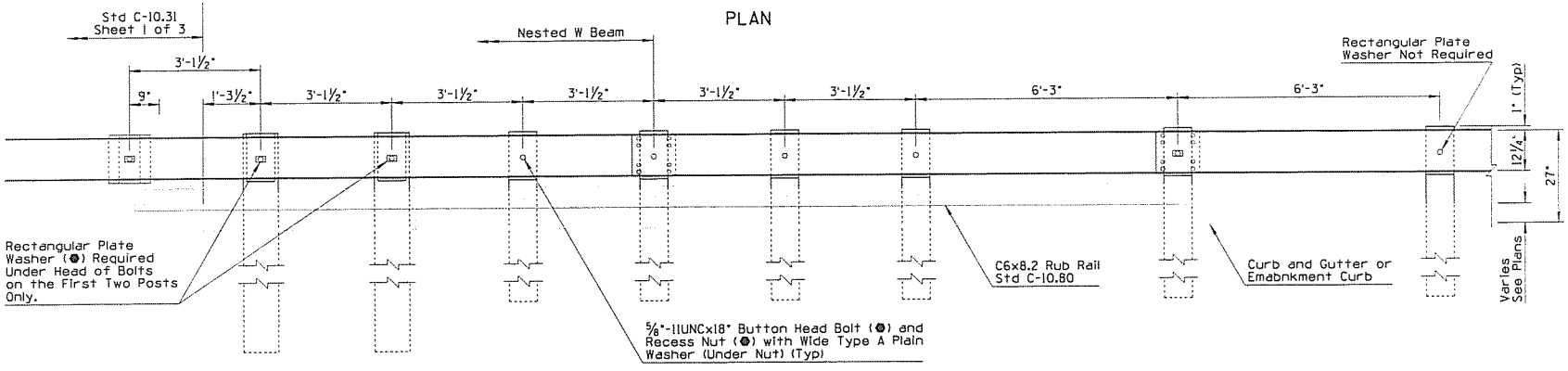


ELEVATION

Guard Rail Transition (Timber Post)

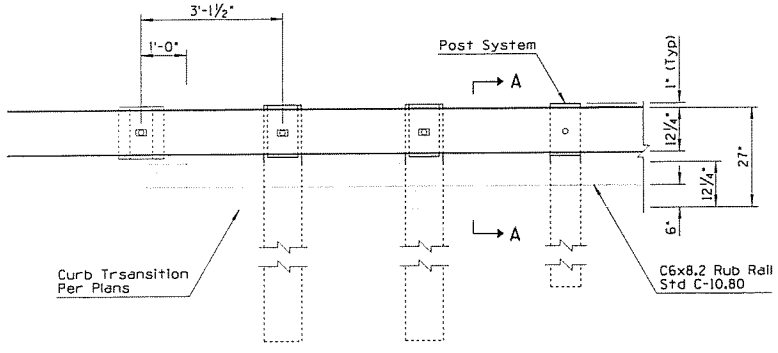


ELEVATION

Note:
For Notes and Dimensions Not Shown, See Guard Rail Transition Above.

Guard Rail Transition To Existing Concrete Barrier Transition

Note:
Curb Height Shall Not Exceed 6" When Adjacent to Rub Rail.

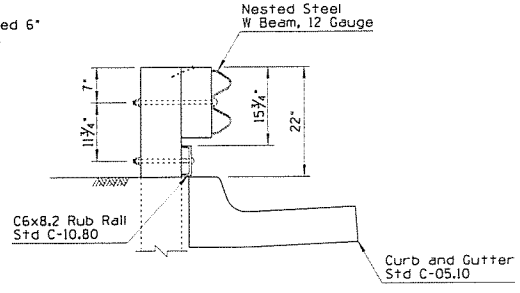


SECTION A-A

| | | |
|---|---|---|
| DESIGN APPROVED | STATE OF ARIZONA<br>DEPARTMENT OF TRANSPORTATION<br>DIVISION OF HIGHWAYS<br>STANDARD DRAWINGS | 3/94 |
| APPROVED FOR DISTRIBUTION | GUARD RAIL TRANSITION<br>W BEAM TO CONCRETE HALF<br>BARRIER (APPROACH) (WITH CURB) | DRAWING NO.<br>C-10.31<br>Sheet 2 of 3 |

| NO. | DESCRIPTION OF REVISIONS | MADE BY | DATE |
|---|---|---|---|
| 1 | | | |
| 2 | | | |
| 3 | | | |
| 4 | | | |

## GENERAL NOTES

● - Indicates ARTBA designation

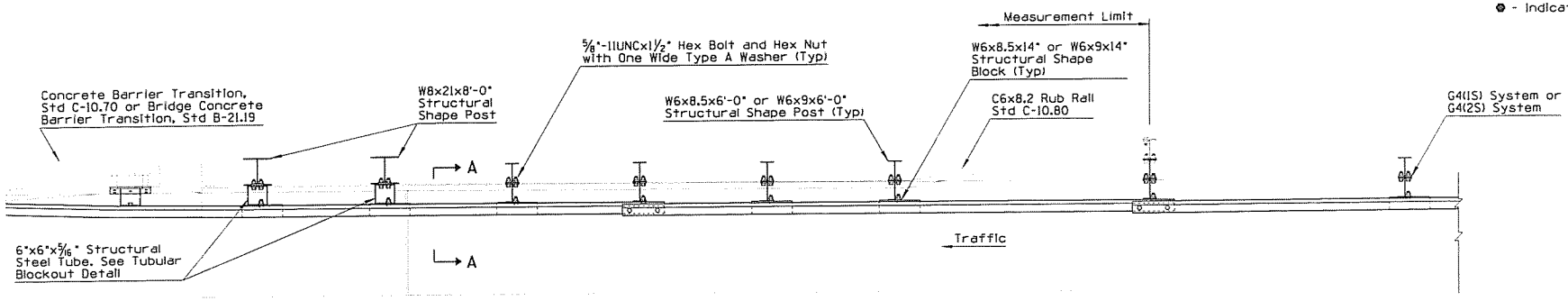


PLAN

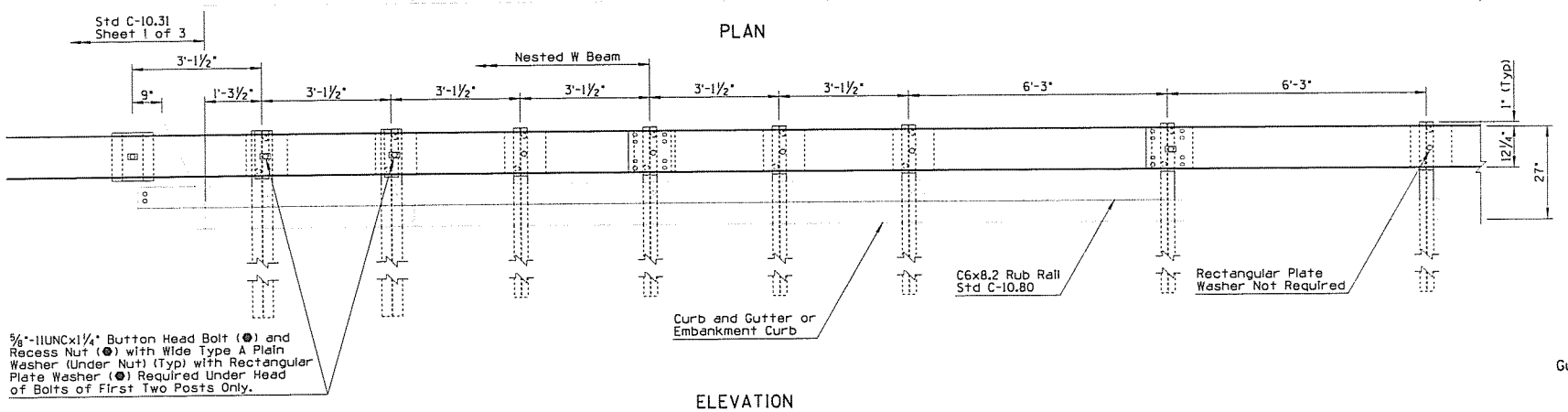


ELEVATION

Guard Rail Transition
(Steel Post)

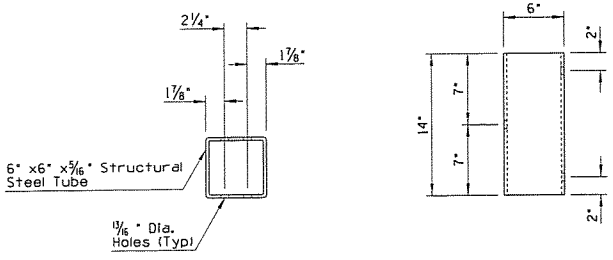


TUBULAR BLOCKOUT DETAIL

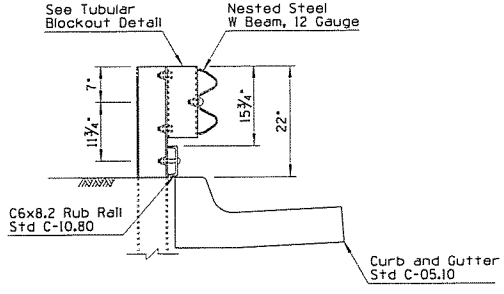


SECTION A-A

Note:
Curb Height Shall Not Exceed 6"
When Adjacent to Rub Rail.

| | | |
|---|---|---|
| DESIGN APPROVED | STATE OF ARIZONA<br>DEPARTMENT OF TRANSPORTATION<br>DIVISION OF HIGHWAYS<br>STANDARD DRAWINGS | 3/94 |
| APPROVED FOR DISTRIBUTION | GUARD RAIL TRANSITION,<br>W BEAM TO CONCRETE<br>HALF BARRIER (APPROACH) (WITH CURB) | DRAWING NO.<br>C-10.31<br>Sheet 3 of 3 |

| NO. | DESCRIPTION OF REVISIONS | MADE BY | DATE |
|---|---|---|---|
| 1 | | | |
| 2 | | | |
| 3 | | | |
| 4 | | | |

## GENERAL NOTES

1. For use with one-way traffic or with two-way traffic outside the clear zone.

● - indicates ARTBA designation

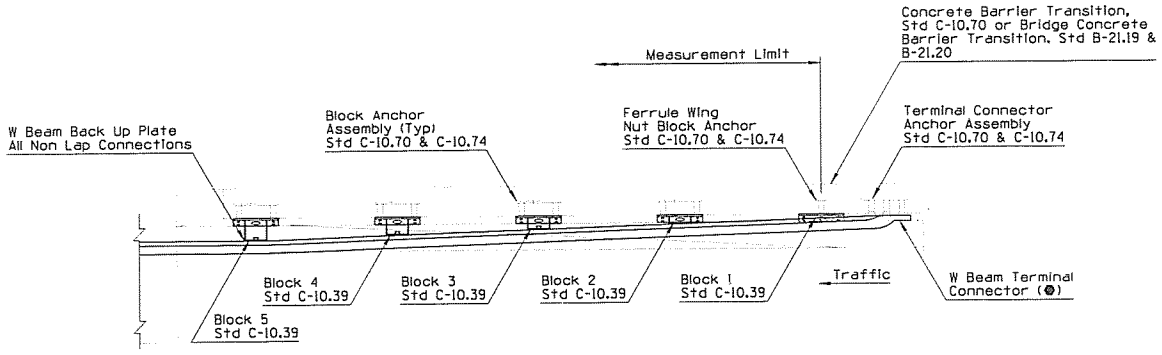


PLAN

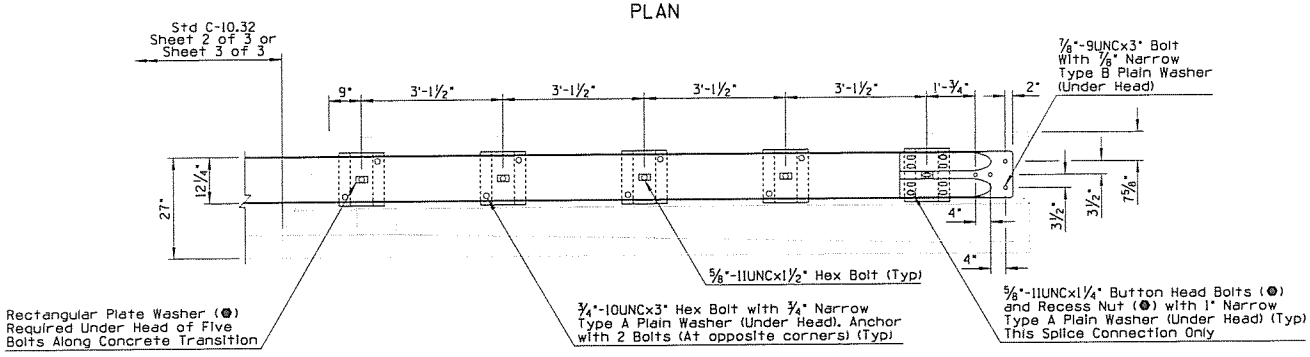


ELEVATION

Guard Rail Transition

Note:
For Notes and Dimensions Not Shown, See Guard Rail Transition Above

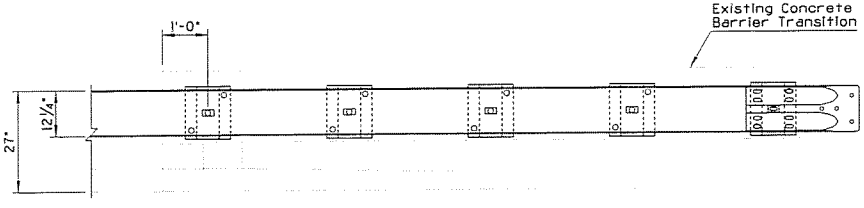


ELEVATION

Guard Rail Transition
To Existing Concrete
Barrier Transition

| | | |
|---|---|---|
| DESIGN APPROVED | STATE OF ARIZONA<br>DEPARTMENT OF TRANSPORTATION<br>DIVISION OF HIGHWAYS<br>STANDARD DRAWINGS | 3/94 |
| APPROVED FOR DISTRIBUTION | GUARD RAIL TRANSITION<br>W BEAM TO CONCRETE HALF BARRIER (DEPARTURE) | DRAWING NO.<br>C-10.32<br>Sheet 1 of 3 |

| NO | DESCRIPTION OF REVISIONS | MADE BY | DATE |
|---|---|---|---|
| 1 | | | |
| 2 | | | |
| 3 | | | |
| 4 | | | |

## GENERAL NOTES

● - Indicates ARTBA designation

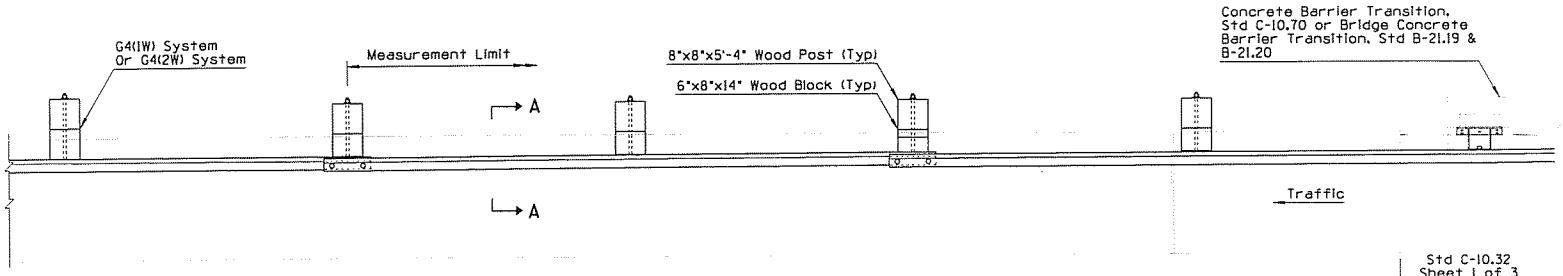


PLAN

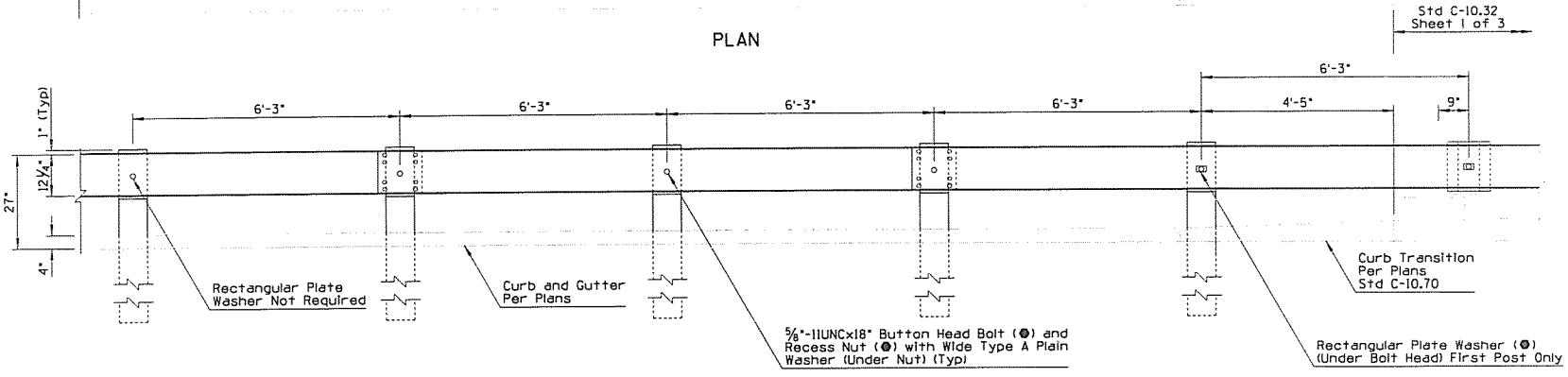


ELEVATION

Guard Rail Transition
(Timber Post)

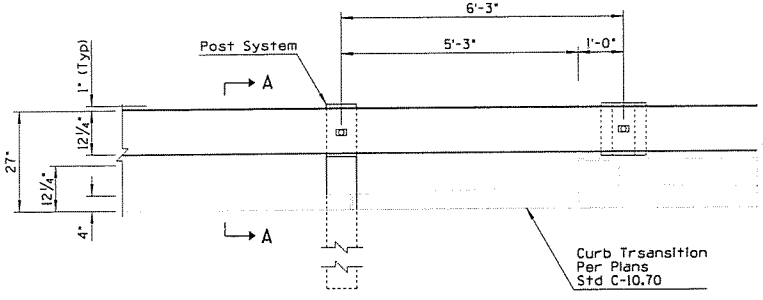


ELEVATION

Note:
For Notes and Dimensions Not Shown, See Guard Rail Transition Above.

Guard Rail Transition
To Existing Concrete
Barrier Transition

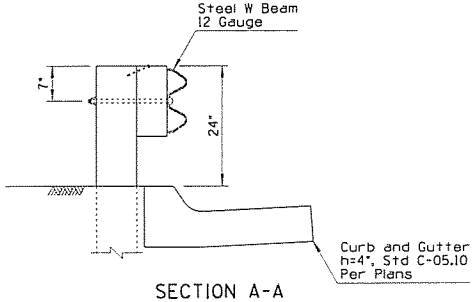


SECTION A-A

| | | |
|---|---|---|
| DESIGN APPROVED<br>APPROVED FOR DISTRIBUTION | STATE OF ARIZONA<br>DEPARTMENT OF TRANSPORTATION<br>DIVISION OF HIGHWAYS<br>STANDARD DRAWINGS | 3/94 |
| | GUARD RAIL TRANSITION<br>W BEAM TO CONCRETE HALF BARRIER (DEPARTURE) | DRAWING NO.<br>C-10.32<br>Sheet 2 of 3 |

| NO | DESCRIPTION OF REVISIONS | MADE BY | DATE |
|---|---|---|---|
| 1 | | | |
| 2 | | | |
| 3 | | | |
| 4 | | | |

## GENERAL NOTES

● - Indicates ARTBA designation

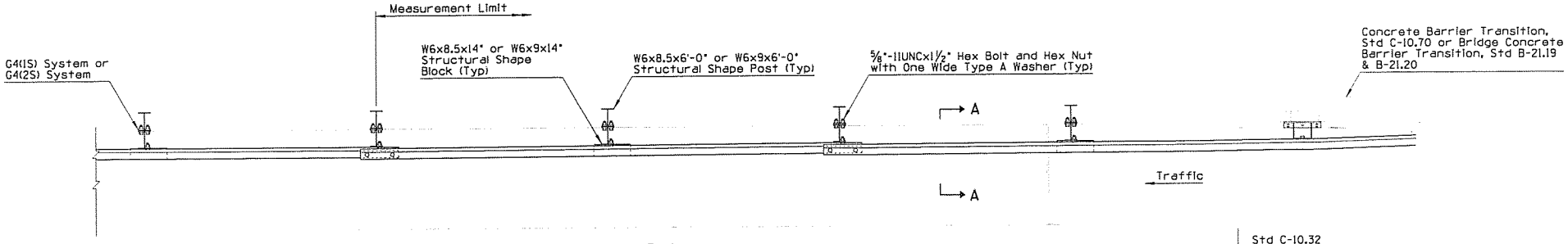


PLAN

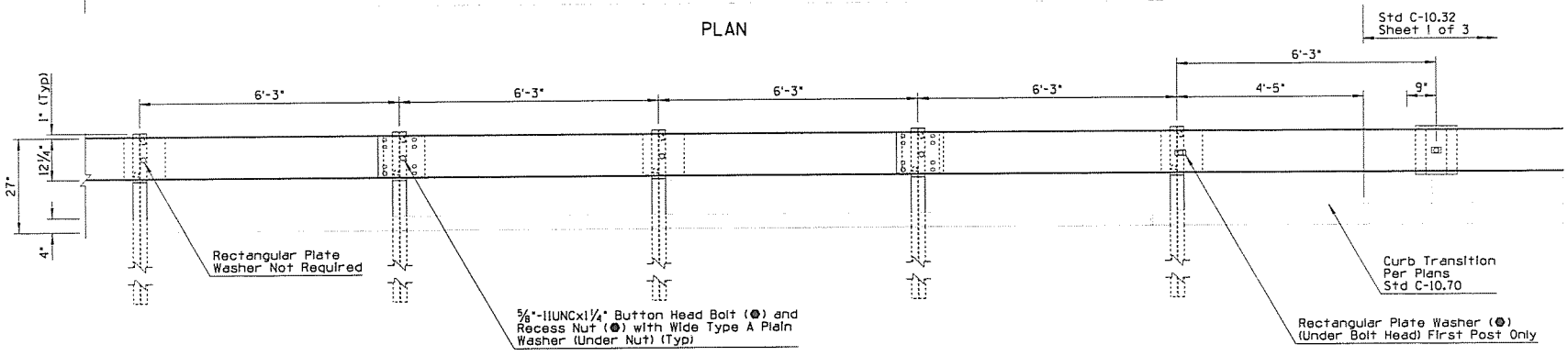


ELEVATION

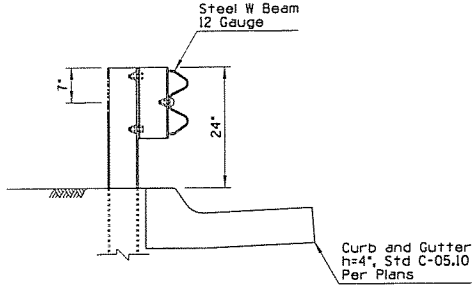


SECTION A-A

Guard Rail Transition
(Steel Post)

| | | |
|---|---|---|
| DESIGN APPROVED | STATE OF ARIZONA<br>DEPARTMENT OF TRANSPORTATION<br>DIVISION OF HIGHWAYS<br>STANDARD DRAWINGS | 3/94 |
| APPROVED FOR DISTRIBUTION | GUARD RAIL TRANSITION,<br>W BEAM TO CONCRETE<br>HALF BARRIER (DEPARTURE) | DRAWING NO.<br>C-10.32<br>Sheet 3 of 3 |

| NO | DESCRIPTION OF REVISIONS | MADE BY | DATE |
|---|---|---|---|
| 1 | | | |
| 2 | | | |
| 3 | | | |
| 4 | | | |

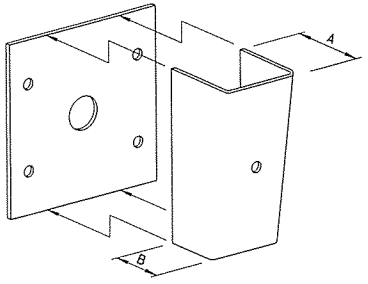


| BLOCK | DIMENSION A | DIMENSION B |
|---|---|---|
| 2 | 1 1/4" | 7/8" |
| 3 | 2 1/2" | 1 3/4" |
| 4 | 3 11/16" | 2 5/8" |
| 5 | 4 15/16" | 3 7/16" |

Note:
Block 1 is a 1/4"x12"x14" Plate

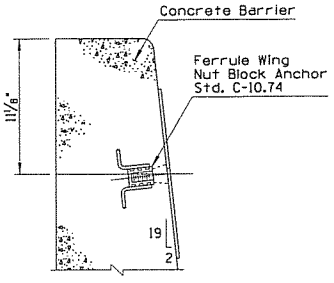


HALF BARRIER
(BLOCK 1 SHOWN)

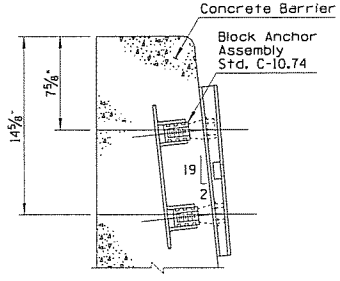


HALF BARRIER
(BLOCK 2 SHOWN)

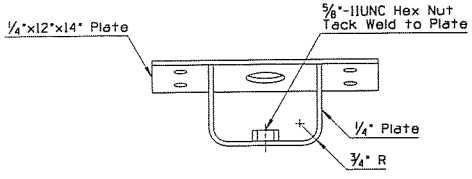


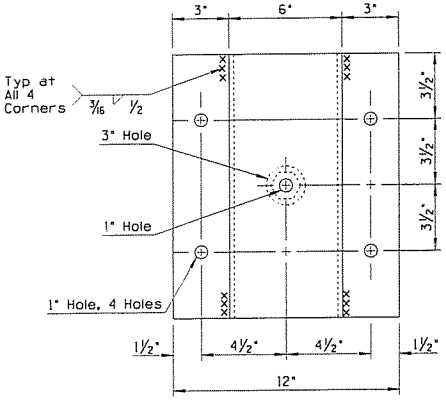


BLOCK DETAILS

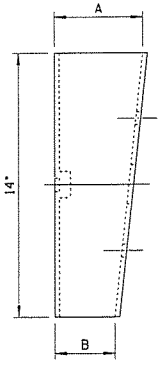


Blocks 2,3,4 and 5

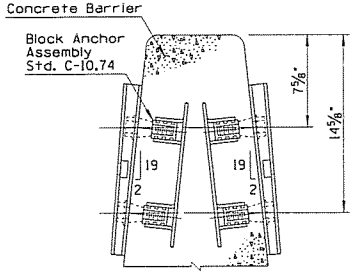


MEDIAN BARRIER
(BLOCK 2 SHOWN)

BLOCK AND ANCHORAGE DETAILS

| | | |
|---|---|---|
| DESIGN APPROVED<br>APPROVED FOR DISTRIBUTION | STATE OF ARIZONA<br>DEPARTMENT OF TRANSPORTATION<br>DIVISION OF HIGHWAYS<br>STANDARD DRAWINGS | 3/94 |
| | HARDWARE FOR<br>W BEAM TRANSITION TO<br>CONCRETE BARRIER | DRAWING NO.<br>C-10.39 |

| NO. | DESCRIPTION OF REVISIONS | MADE BY | DATE |
|---|---|---|---|
| 1 | | | |
| 2 | | | |
| 3 | | | |
| 4 | | | |

## GENERAL NOTES

1. Concrete shall be constructed by the Fixed Form Cast-In-Place method.
2. Concrete shall be Class S, design strength $f'_c$ = 3000 psi.

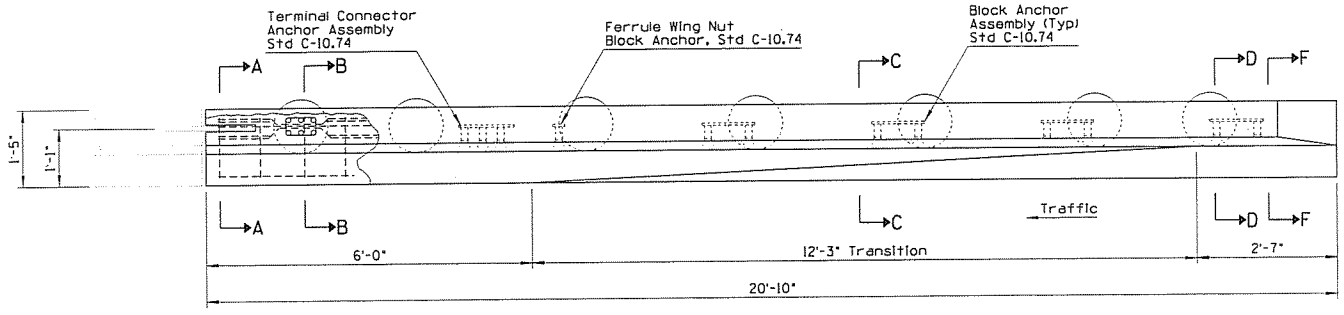


PLAN

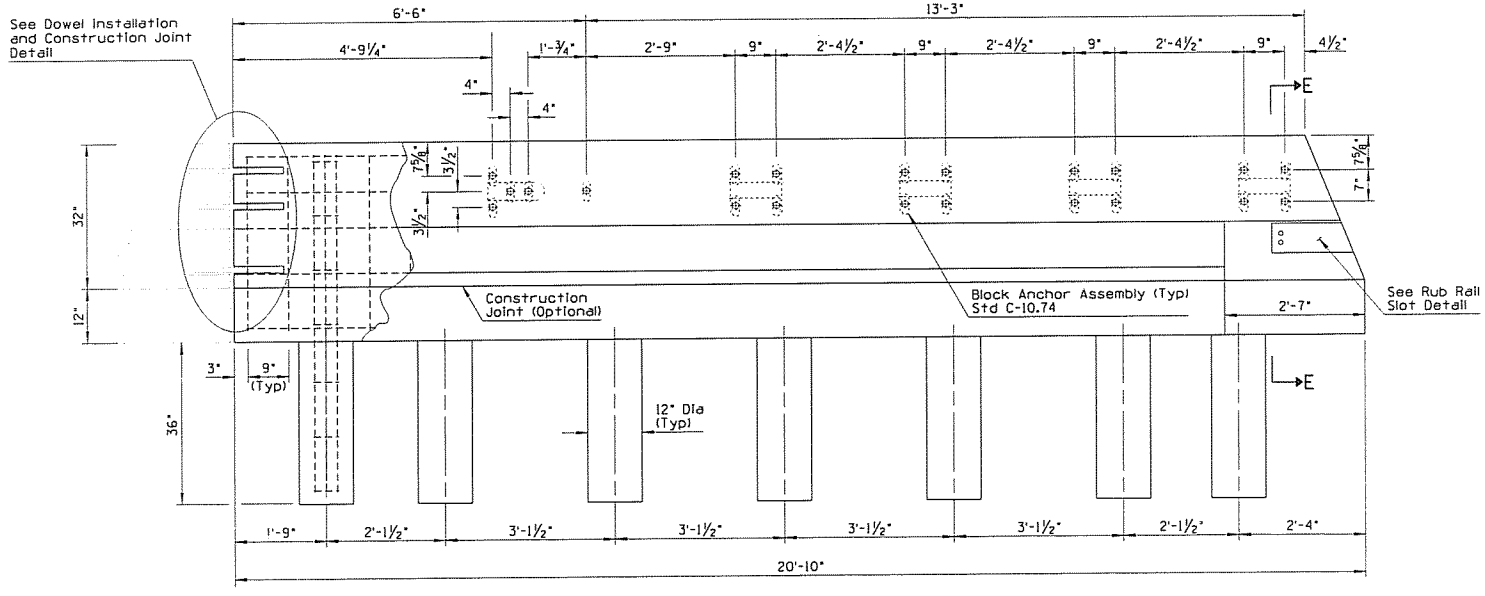


ELEVATION

BARRIER WITHOUT CURB

| | | |
|---|---|---|
| DESIGN APPROVED | STATE OF ARIZONA<br>DEPARTMENT OF TRANSPORTATION<br>DIVISION OF HIGHWAYS<br>STANDARD DRAWINGS | 3/94 |
| APPROVED FOR DISTRIBUTION | CONCRETE HALF<br>BARRIER TRANSITION | DRAWING NO.<br>C-10.70<br>Sheet 1 of 4 |

| NO. | DESCRIPTION OF REVISIONS | MADE BY | DATE |
|---|---|---|---|
| 1 | | | |
| 2 | | | |
| 3 | | | |
| 4 | | | |

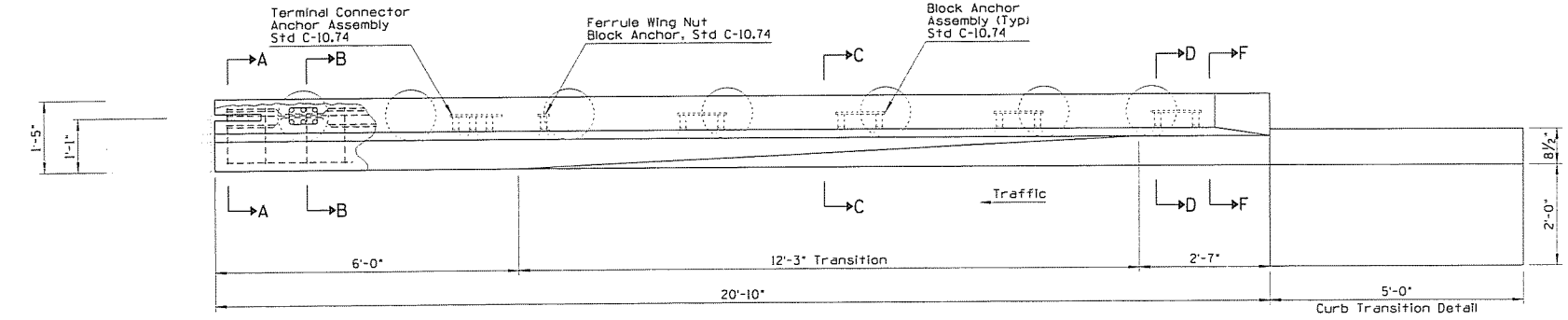


PLAN

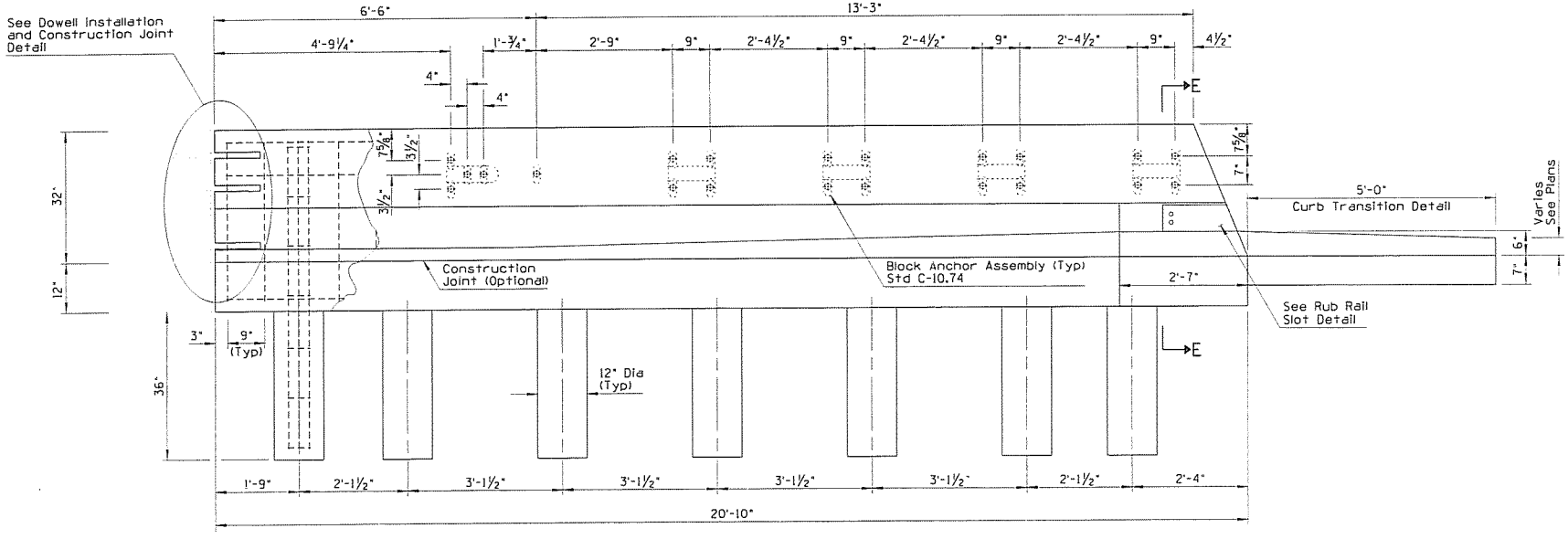


ELEVATION

BARRIER WITH CURB AND GUTTER

| | | |
|---|---|---|
| DESIGN APPROVED | STATE OF ARIZONA<br>DEPARTMENT OF TRANSPORTATION<br>DIVISION OF HIGHWAYS<br>STANDARD DRAWINGS | 3/94 |
| APPROVED FOR DISTRIBUTION | CONCRETE HALF<br>BARRIER TRANSITION | DRAWING NO.<br>C-10.70<br>Sheet 2 of 4 |

| NO | DESCRIPTION OF REVISIONS | MADE BY | DATE |
|---|---|---|---|
| 1 | | | |
| 2 | | | |
| 3 | | | |
| 4 | | | |

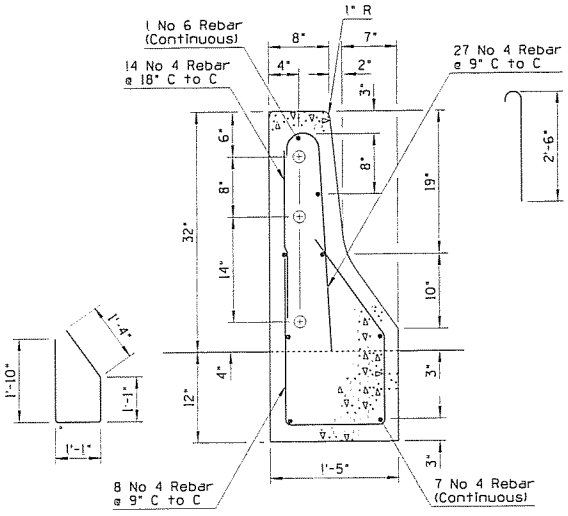


SECTION A-A

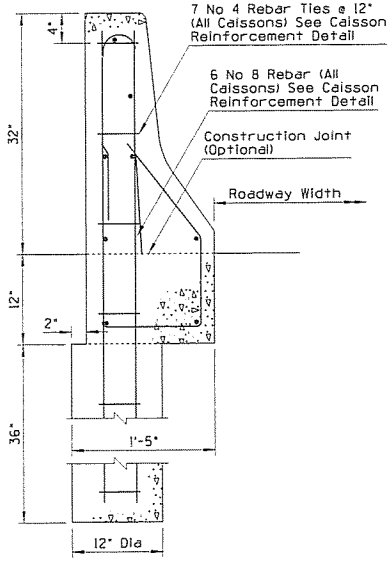


SECTION B-B

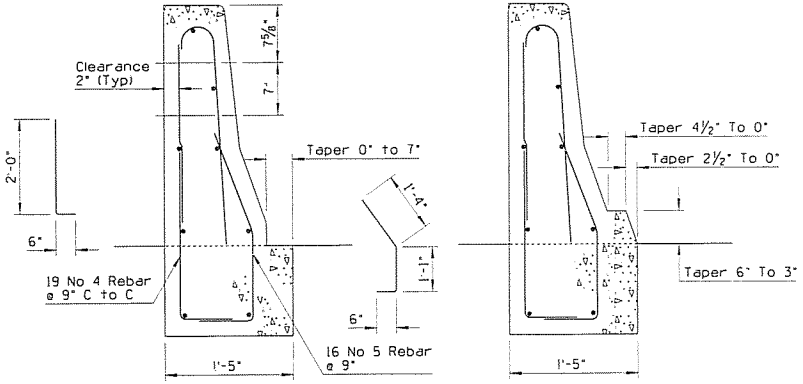


SECTION C-C

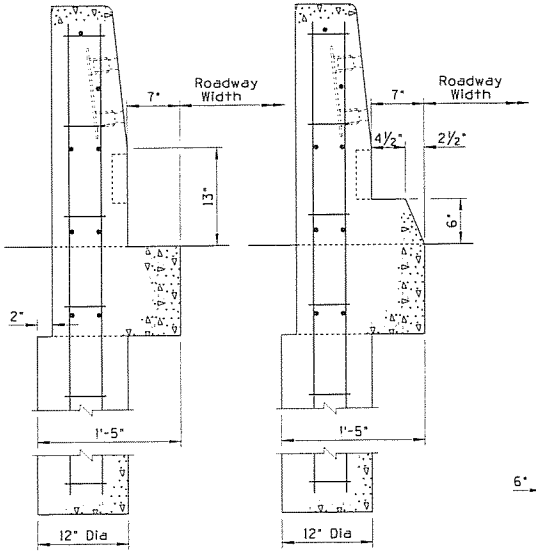


SECTION D-D

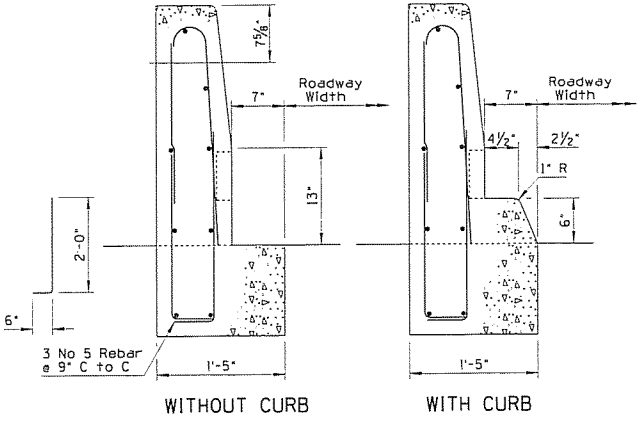


SECTION E-E

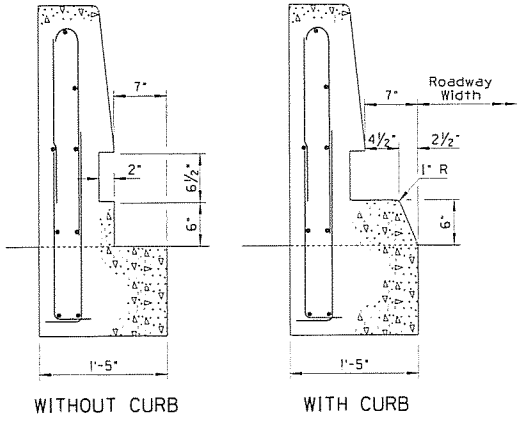


SECTION F-F

DESIGN APPROVED

APPROVED FOR DISTRIBUTION

STATE OF ARIZONA
DEPARTMENT OF TRANSPORTATION
DIVISION OF HIGHWAYS
STANDARD DRAWINGS

3/94

CONCRETE HALF BARRIER TRANSITION

DRAWING NO. C-10.70

Sheet 3 of 4

| NO | DESCRIPTION OF REVISIONS | MADE BY | DATE |
|---|---|---|---|
| 1 | | | |
| 2 | | | |
| 3 | | | |
| 4 | | | |

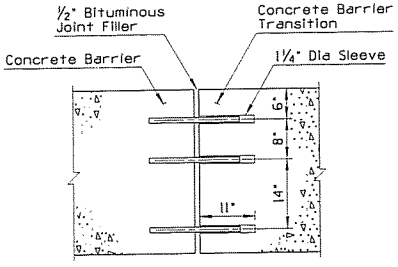


Joint Assembly

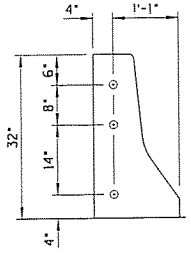


Dowel Locations

DOWEL INSTALLATION
AND CONSTRUCTION JOINT DETAIL

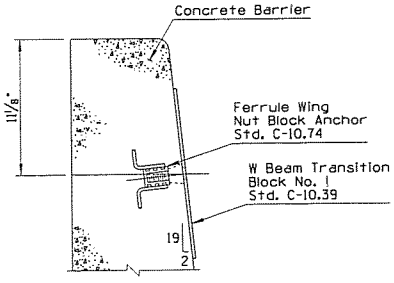


BLOCK AND ANCHORAGE
HALF BARRIER
(BLOCK 1 SHOWN)

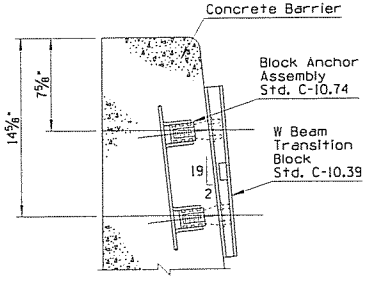


BLOCK AND ANCHORAGE
HALF BARRIER
(BLOCK 2 SHOWN)

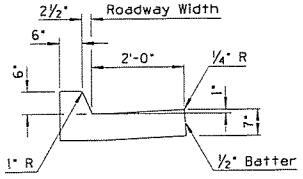


Barrier End

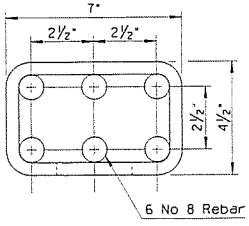


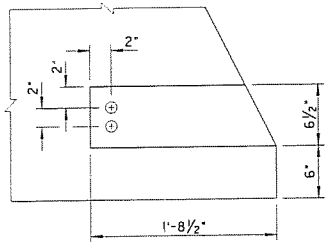


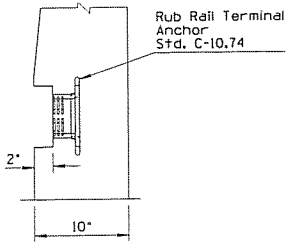


RUB RAIL SLOT DETAIL

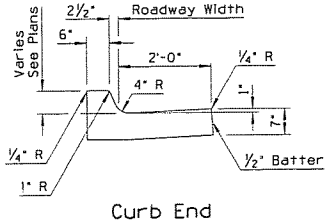


Curb End

CURB TRANSITION DETAIL

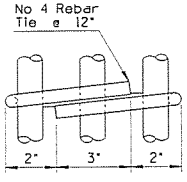


CAISSON REINFORCEMENT

| | | |
|---|---|---|
| DESIGN APPROVED | STATE OF ARIZONA<br>DEPARTMENT OF TRANSPORTATION<br>DIVISION OF HIGHWAYS<br>STANDARD DRAWINGS | 3/94 |
| APPROVED FOR DISTRIBUTION | CONCRETE HALF BARRIER TRANSITION | DRAWING NO. C-10.70<br>Sheet 4 of 4 |

| NO. | DESCRIPTION OF REVISIONS | MADE BY | DATE |
|---|---|---|---|
| 1 | | | |
| 2 | | | |
| 3 | | | |
| 4 | | | |

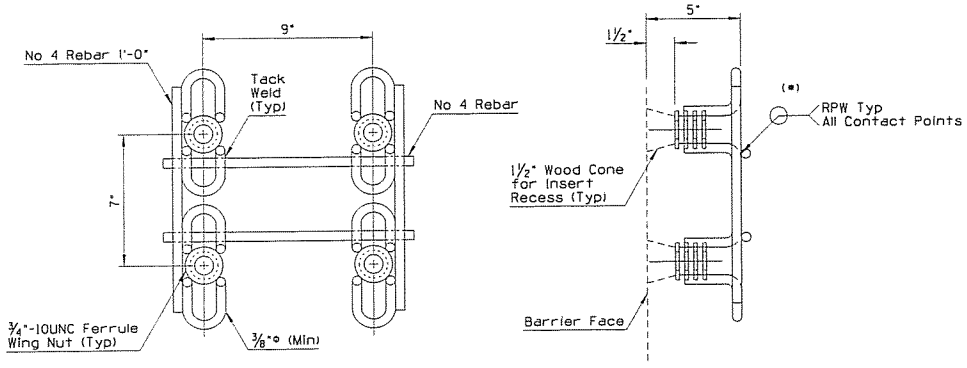


BLOCK ANCHOR ASSEMBLY

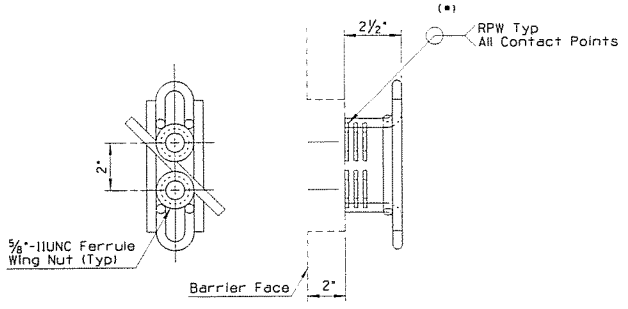


RUB RAIL TERMINAL ANCHOR

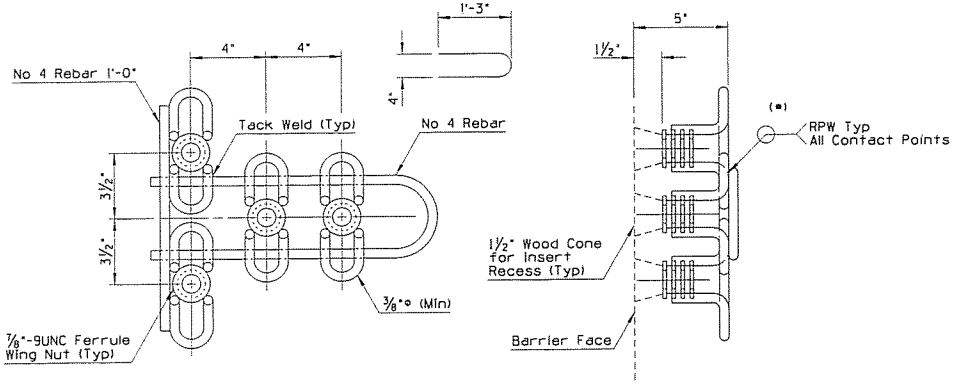


TERMINAL CONNECTOR ANCHOR ASSEMBLY

* Each Weld Shall Develop The Tensile Strength Of The Wire

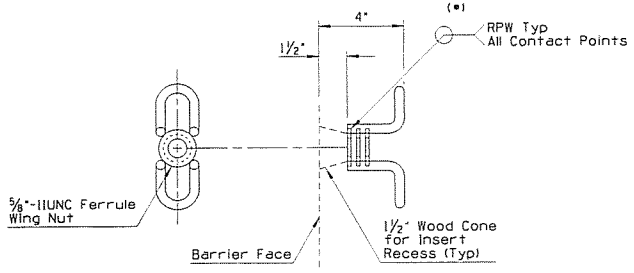


FERRULE WING NUT BLOCK ANCHOR

| | | |
|---|---|---|
| DESIGN APPROVED | STATE OF ARIZONA<br>DEPARTMENT OF TRANSPORTATION<br>DIVISION OF HIGHWAYS<br>STANDARD DRAWINGS | 3/94 |
| APPROVED FOR DISTRIBUTION | HARDWARE FOR CONCRETE BARRIER TRANSITIONS | DRAWING NO. C-10.74 |

| NO | DESCRIPTION OF REVISIONS | MADE BY | DATE |
|---|---|---|---|
| 1 | | | |
| 2 | | | |
| 3 | | | |
| 4 | | | |

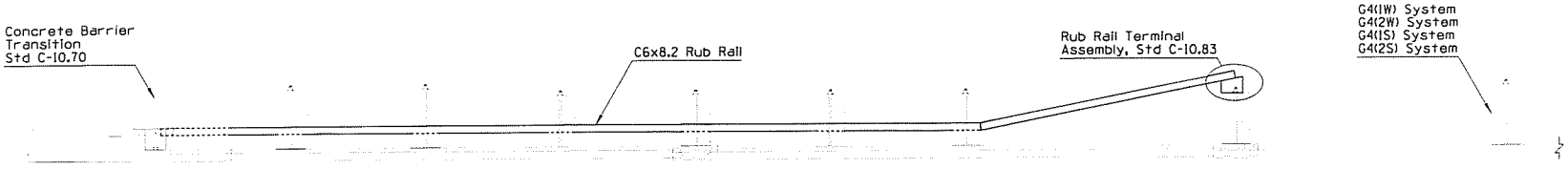


PLAN

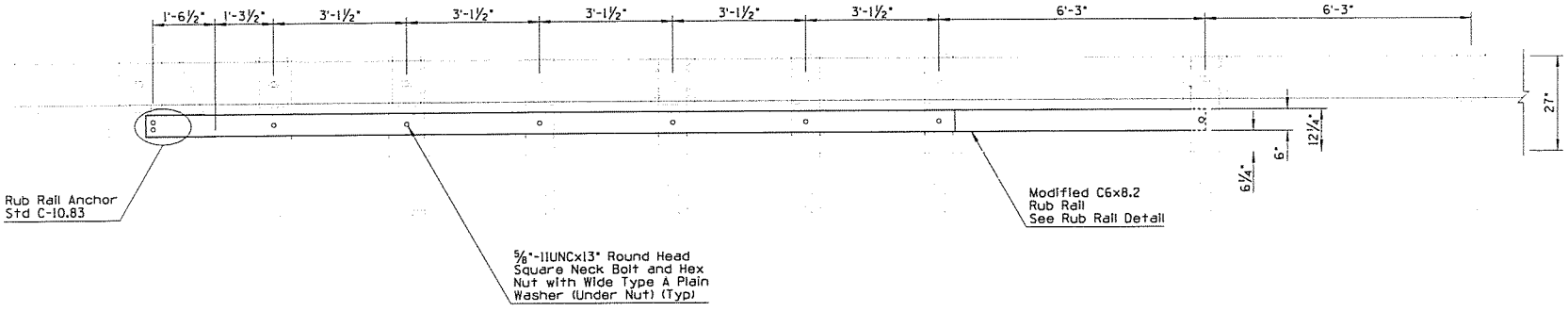


ELEVATION - TIMBER POST

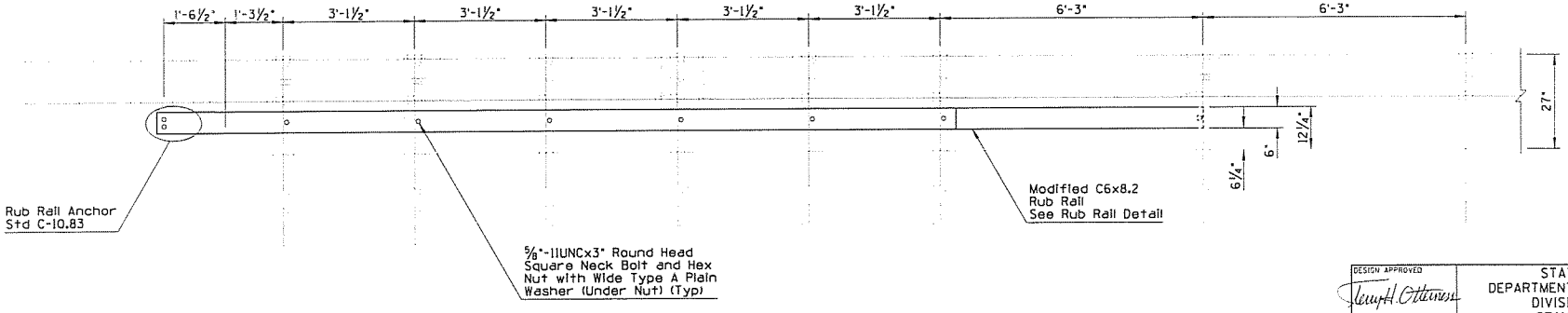


ELEVATION - STEEL POST

| | | |
|---|---|---|
| DESIGN APPROVED | STATE OF ARIZONA<br>DEPARTMENT OF TRANSPORTATION<br>DIVISION OF HIGHWAYS<br>STANDARD DRAWINGS | 3/94 |
| APPROVED FOR DISTRIBUTION | RUB RAIL | DRAWING NO. C-10.80<br>Sheet 1 of 2 |

| NO | DESCRIPTION OF REVISIONS | MADE BY | DATE |
|---|---|---|---|
| 1 | | | |
| 2 | | | |
| 3 | | | |
| 4 | | | |

## GENERAL NOTES

1. All slots in rub rail are 11/16" x 2".
   All square holes are 11/16".

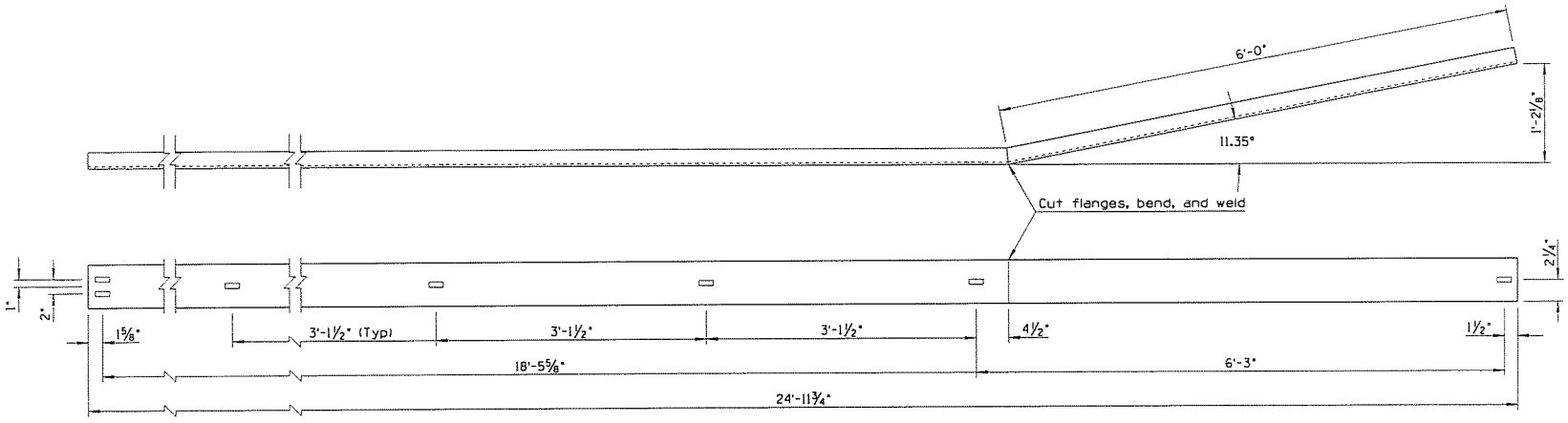


MODIFIED C6X8.2 RUB RAIL DETAIL

| | | |
|---|---|---|
| DESIGN APPROVED | STATE OF ARIZONA<br>DEPARTMENT OF TRANSPORTATION<br>DIVISION OF HIGHWAYS<br>STANDARD DRAWINGS | 3/94 |
| APPROVED FOR DISTRIBUTION | RUB RAIL | DRAWING NO.<br>C-10.80<br>Sheet 2 of 2 |

| NO | DESCRIPTION OF REVISIONS | MADE BY | DATE |
|---|---|---|---|
| 1 | | | |
| 2 | | | |
| 3 | | | |
| 4 | | | |

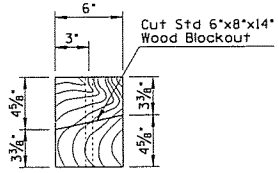


PLAN
RUB RAIL BACK BLOCKOUT DETAIL

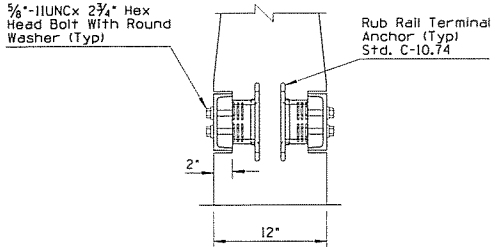


Median Barrier

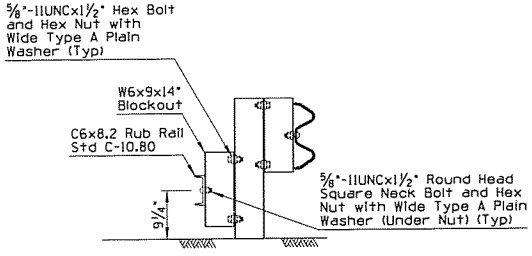


SECTION

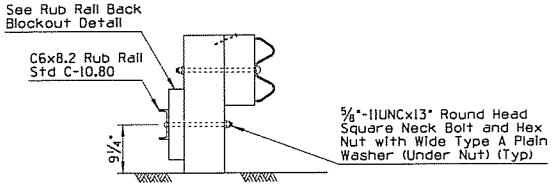


SECTION

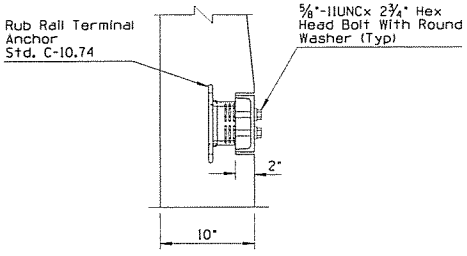


Half Barrier

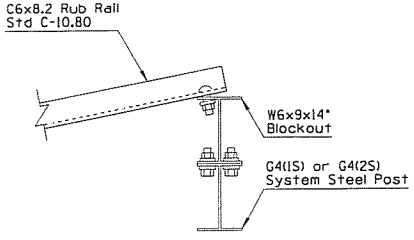


PLAN
STEEL POST

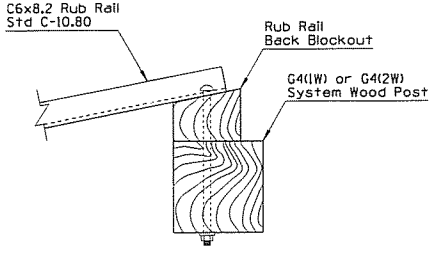


PLAN
TIMBER POST

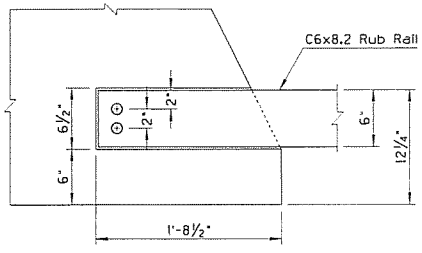


Elevation
RUB RAIL ANCHOR

RUB RAIL TERMINAL ASSEMBLY

| | | |
|---|---|---|
| DESIGN APPROVED | STATE OF ARIZONA<br>DEPARTMENT OF TRANSPORTATION<br>DIVISION OF HIGHWAYS<br>STANDARD DRAWINGS | 3/94 |
| APPROVED FOR DISTRIBUTION | HARDWARE FOR RUB RAIL | DRAWING NO. C-10.83 |

| NO. | DESCRIPTION OF REVISIONS | MADE BY | DATE |
|---|---|---|---|
| 1 | MODIFIED STANDARD | PNB | 3/94 |
| 2 | | | |
| 3 | | | |
| 4 | | | |

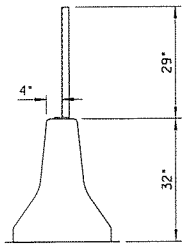


Glare Screen
Installation on
Standard Median Barrier

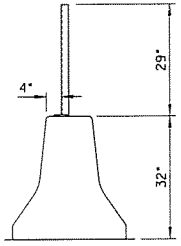


Glare Screen
Installation on
Median Barrier Transition

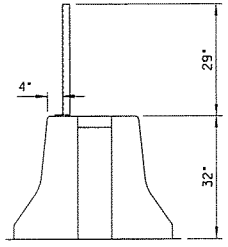


Glare Screen
Installation on
Half Barrier at Bridge Pier

## GENERAL NOTES

1. Posts shall be 12'-6" C to C. Structural steel shall conform to ASTM-A-36, galvanized ASTM-A-123.
2. Hex head bolt shall conform to ASTM-A-307, galvanized ASTM-A-153 Class C.
3. Helical spring lock washer shall conform to ASTM-A-313, galvanized ASTM-A-153 Class C.
4. Tension wire: AWG No 9(0.148") galvanized to conform to ASTM-A-116 Class 2.
5. Hog ring: AWG No 12 (0.105") galvanized ASTM-A-116 Class 2. Fasten glare screen to top and bottom tension wire spaced approximately 2' apart.
6. Glare Screen: 18 Gauge steel. ASTM-A-526, galvanized ASTM-A-525/(G235), expanded to the following dimensions: 1.33" shortway of diamond and 4.0" longway of diamond (center to center of bridges) with a strand width of 0.250" angled at approximately 20° to the plane of the original sheet. Top edge to be shop curled and crimped on 12" centers. Glare screen shall be installed such that flat portion of screen blocks light from headlights. See Direction Detail.
7. Splices allowed in glare screen at posts only, with one full diamond overlap.
8. Glare screen shall be constructed without interruption to the greatest degree possible.

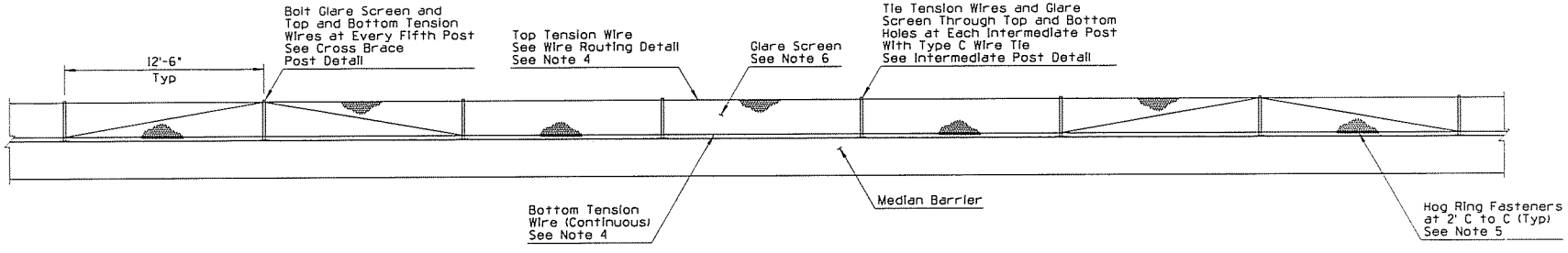


ELEVATION

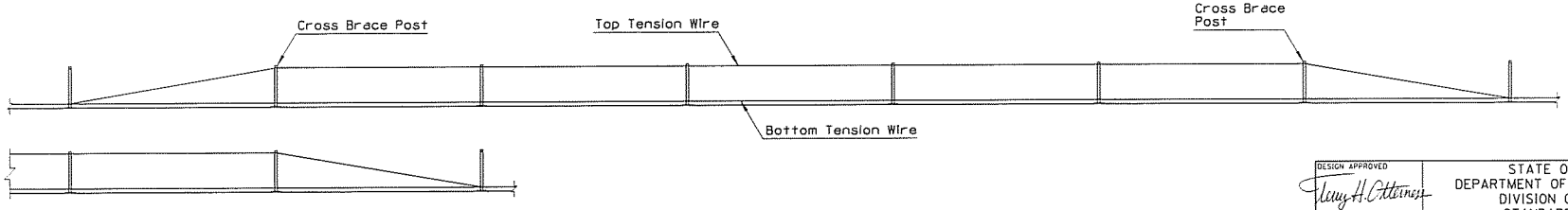


TENSION WIRE ROUTING DETAIL

| DESIGN APPROVED | STATE OF ARIZONA<br>DEPARTMENT OF TRANSPORTATION<br>DIVISION OF HIGHWAYS<br>STANDARD DRAWINGS | REV. 3/94 |
|---|---|---|
| APPROVED FOR DISTRIBUTION | (1) GLARE SCREEN<br>CONCRETE MEDIAN BARRIER | DRAWING NO. C-10.97<br>Sheet 1 of 3 |

| NO | DESCRIPTION OF REVISIONS | MADE BY | DATE |
|---|---|---|---|
| 1 | MODIFIED STANDARD & ADDED SHT 2 | PNB | 3/94 |
| 2 | | | |
| 3 | | | |
| 4 | | | |

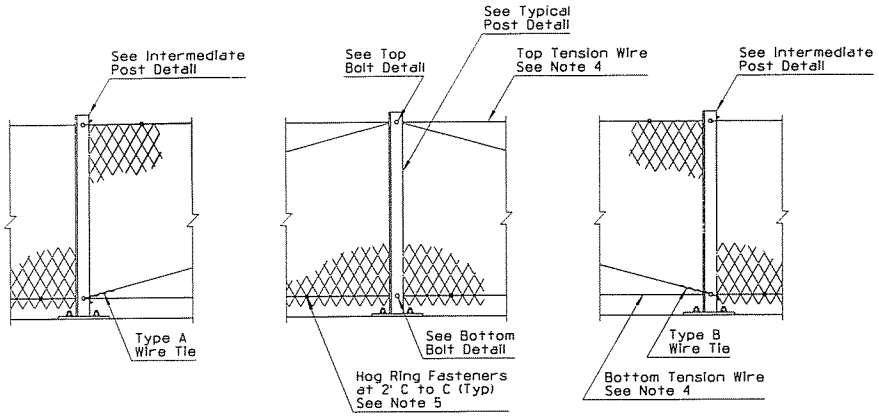


CROSS BRACE POST DETAIL

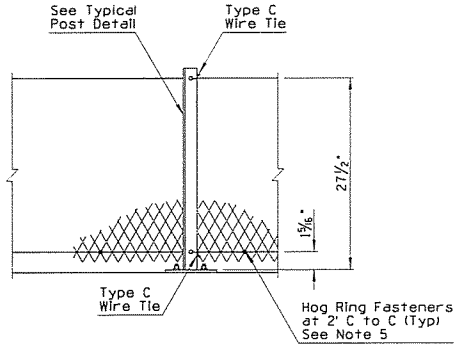


INTERMEDIATE POST DETAIL

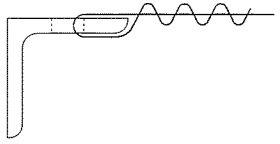

TYPE A WIRE TIE

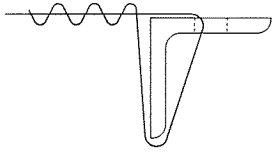

TYPE B WIRE TIE

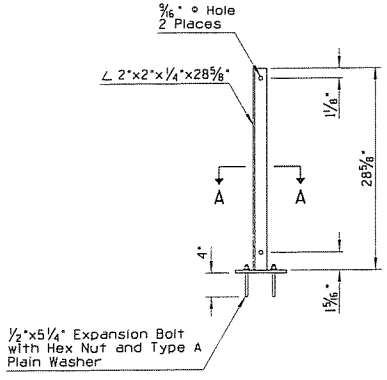


TYPICAL POST DETAIL

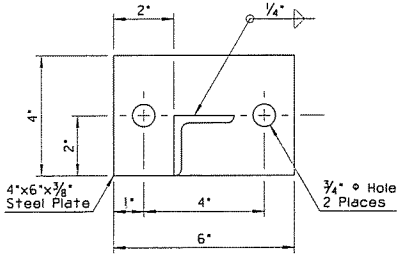


SECTION A-A

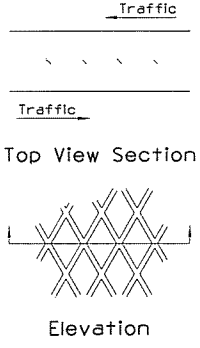


DIRECTION DETAIL

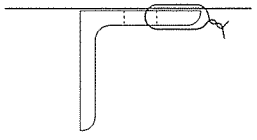

TYPE C WIRE TIE

| | | |
|---|---|---|
| DESIGN APPROVED | STATE OF ARIZONA<br>DEPARTMENT OF TRANSPORTATION<br>DIVISION OF HIGHWAYS<br>STANDARD DRAWINGS | REV. 3/94 |
| APPROVED FOR DISTRIBUTION ① | GLARE SCREEN<br>CONCRETE MEDIAN BARRIER | DRAWING NO. C-10.97<br>Sheet 2 of 3 |

| NO. | DESCRIPTION OF REVISIONS | MADE BY | DATE |
|---|---|---|---|
| 1 | MODIFIED STANDARD & ADDED SHT 3 | PNB | 3/94 |
| 2 | REVERSED BOLT | PNB | 3/94 |
| 3 | MOVED END GUY WIRE | PNB | 3/94 |
| 4 | | | |

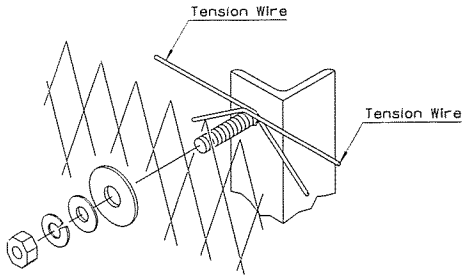


TOP BOLT DETAIL

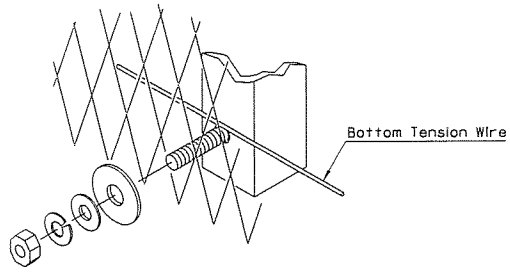


BOTTOM BOLT DETAIL

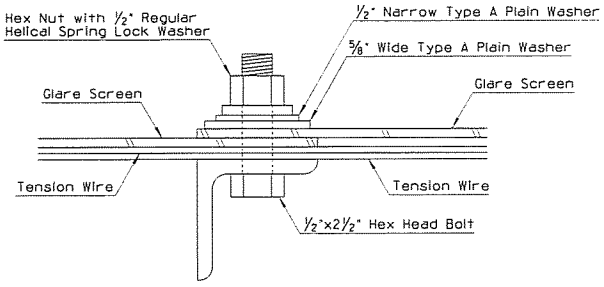


② TOP BOLT SECTION

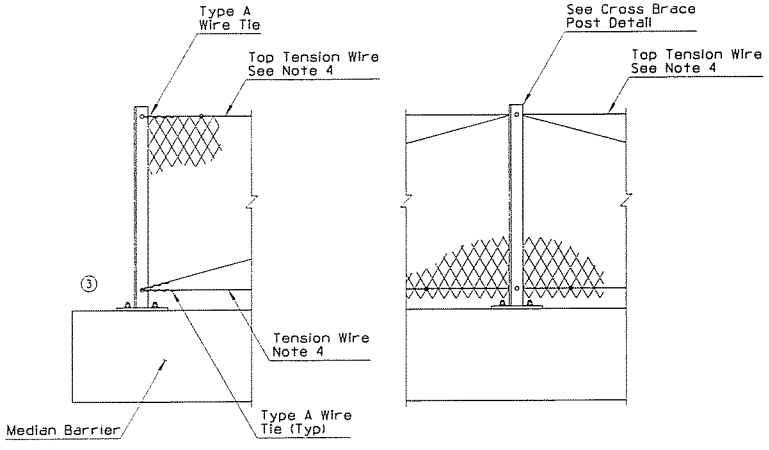


TERMINATION DETAIL

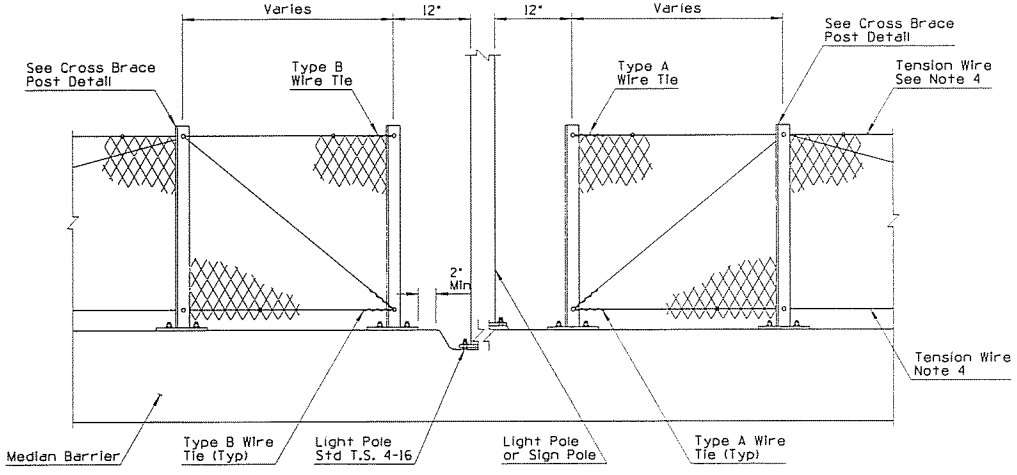


OBSTRUCTION DETAIL

| | | |
|---|---|---|
| DESIGN APPROVED | STATE OF ARIZONA<br>DEPARTMENT OF TRANSPORTATION<br>DIVISION OF HIGHWAYS<br>STANDARD DRAWINGS | REV.<br>3/94 |
| APPROVED FOR DISTRIBUTION | ① GLARE SCREEN<br>CONCRETE MEDIAN BARRIER | DRAWING NO.<br>C-10.97<br>Sheet 3 of 3 |

| NO | DESCRIPTION OF REVISIONS | MADE BY | DATE |
|---|---|---|---|
| 1 | MODIFIED DIMENSION | PNB | 3/94 |
| 2 | | | |
| 3 | | | |
| 4 | | | |

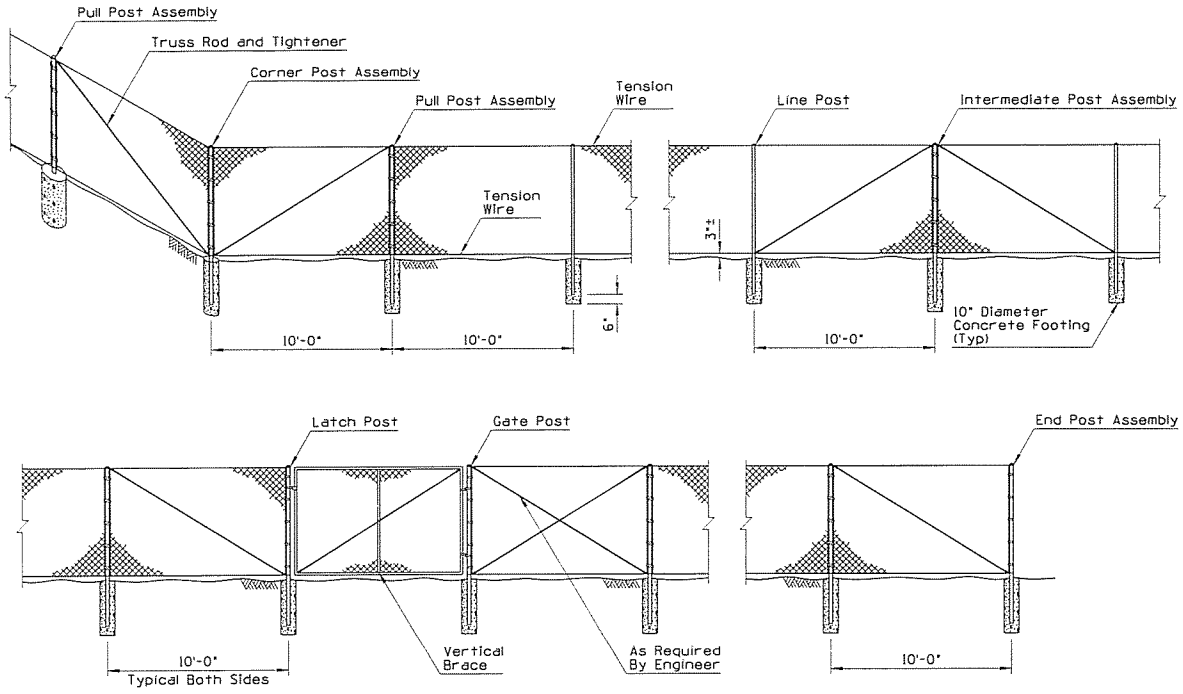


TYPICAL CHAIN LINK FENCE INSTALLATION - TYPE 1 SHOWN

## GENERAL NOTES

1. Posts shall be round, H-section, or roll-formed and shall conform to the nominal dimensional requirements shown on the plans. Dimensional tolerances for all shapes shall be according to ASTM A-500. In addition, the material of which posts are fabricated shall have a nominal thickness, before galvanizing, of not less than 0.111" for line posts and 0.130" for terminal posts.
2. Chain link fabric shall be either zinc-coated or aluminum-coated steel wire fence fabric. Zinc-coated steel fabric shall conform to the requirements of ASTM A392, Class 1 coating. Aluminum-coated steel fabric shall conform to the requirements of ASTM A491, with a minimum weight of coating of 0.40 ounce per square foot of wire surface area. Fabric shall be 11 guage for all fence fabric 60 inches or less in height and shall be 9 guage for fabrics greater than 60 inches in height.
3. Tension wires shall be 7 guage (0.177 inch diameter) coil spring steel wire with a minimum tenslie strength of 75,000 pounds per square inch and shall be zinc-coated or aluminum-coated.
4. Truss rods shall be 3/8 inch diameter adjustable rods. Truss tighteners shall have a strap thickness of not less than 1/4 inch.
5. Stretcher bars shall be 3/16 inch by 3/4 inch steel flat bars. Stretcher bar bands shall be 1/8 inch by one inch preformed steel bands.
6. (1) Bottom tension wire shall be 3 inches from top of crown on concrete footings.
7. Intermediate post assemblies shall be spaced at 500 foot intervals or midway between pull posts when the distance between such posts is less than 1,000 feet and more than 500 feet.
8. See sheet 3 of 3 for typical fence location.

### TYPICAL POST DIMENSIONS

| Fabric Height | Corner, End, Intermediate, Gate, Latch and Pull Posts | | | | Line Posts | | | |
|---|---|---|---|---|---|---|---|---|
| | | Round | Roll Formed | | | Round | | Roll Formed |
| | Length | (OD) | ∟ | ☐ | Length | (OD) | H-Section | ☐ |
| 36" | 6'-0" | 2.375" | 3.50"x3.50" | 2.25"x1.70" | 5'-6" | 1.900" | 1.875"x1.625" | 1.875"x1.625" |
| 48" | 7'-0" | 2.375" | 3.50"x3.50" | 2.25"x1.70" | 6'-6" | 1.900" | 1.875"x1.625" | 1.875"x1.625" |
| 60" | 8'-0" | 2.375" | 3.50"x3.50" | 2.25"x1.70" | 7'-6" | 1.900" | 1.875"x1.625" | 1.875"x1.625" |
| 72" | 9'-0" | 2.375" | 3.50"x3.50" | 2.25"x1.70" | 8'-6" | 1.900" | 1.875"x1.625" | 1.875"x1.625" |
| Over 72" | Height +3'-0" | 2.875" | 3.50"x3.50" | 2.50"x2.50" | Height +2'-6" | 2.375" | 2.250"x2.000" | 1.875"x1.625" |

| | | |
|---|---|---|
| DESIGN APPROVED | STATE OF ARIZONA<br>DEPARTMENT OF TRANSPORTATION<br>DIVISION OF HIGHWAYS<br>STANDARD DRAWINGS | REV.<br>3/94 |
| APPROVED FOR DISTRIBUTION | FENCE, CHAIN LINK TYPE 1 | DRAWING NO.<br>C-12.20<br>Sheet 1 of 3 |

| NO. | DESCRIPTION OF REVISIONS | MADE BY | DATE |
|---|---|---|---|
| 1 | MODIFIED DIMENSION | PNB | 3/94 |
| 2 | | | |
| 3 | | | |
| 4 | | | |

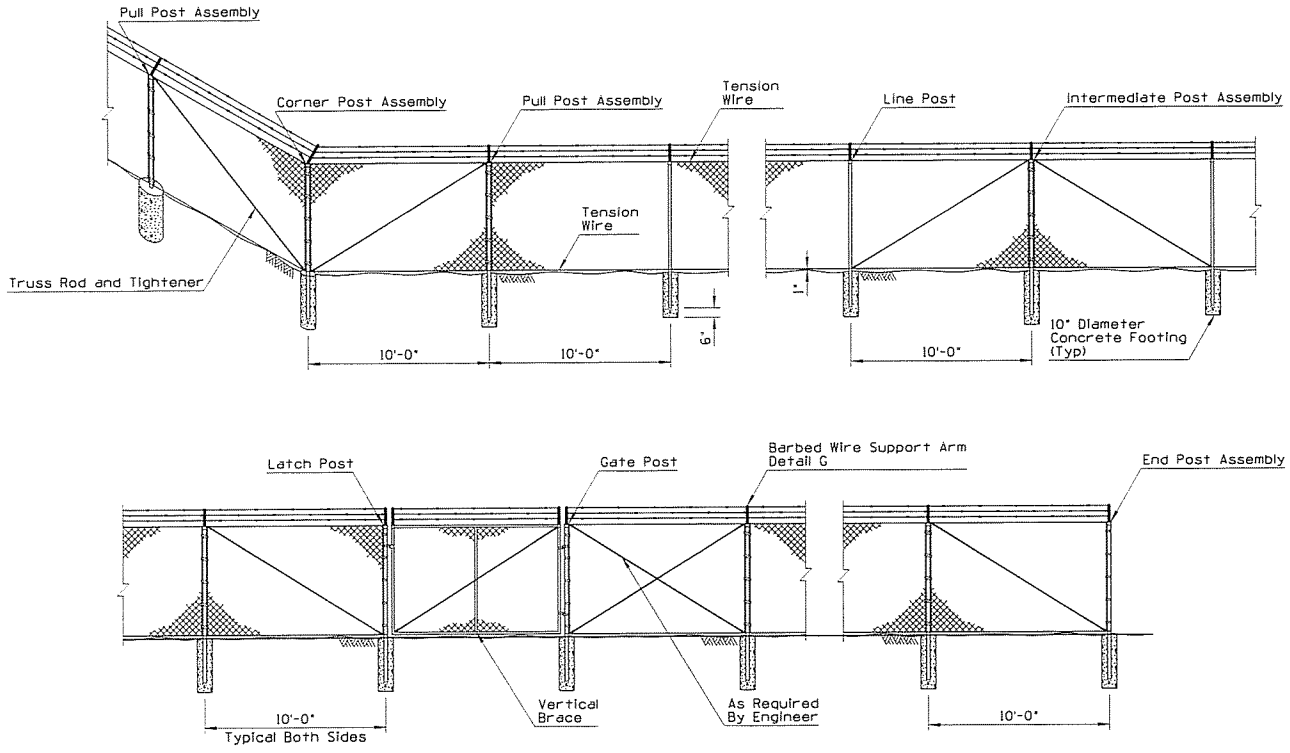


TYPICAL CHAIN LINK FENCE INSTALLATION - TYPE 2 SHOWN

## GENERAL NOTES

1. Barbed wire for use with Type 2 chain link fence shall be 12 guage steel wire with 4 point 14 guage barbs spaced five inches apart and shall be either zinc-coated or aluminum-coated. Zinc-coated steel wire shall conform to the requirements of ASTM A121, Class 1 coating. Aluminum-coated steel wire shall conform to the requirements of ASTM 1585, Type 1, Class 1 coating.
2. Barbed wire support arm shall be of the type shown on the plans, shall be fabricated from commercial quality steel, and shall be zinc-coated in accordance with the requirements of AASHTO M111.
3. Bottom tension wire shall just clear top of crown on concrete footings.
4. For details and notes not shown - see chain link fence Type 1, sheet 1 of 3.
5. See sheet 3 of 3 for typical fence location.

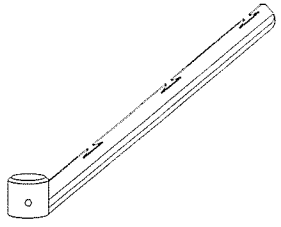

DETAIL G
BARBED WIRE SUPPORT ARM

### TYPICAL POST DIMENSIONS

| Fabric Height | Corner, End, Intermediate, Gate, Latch and Pull Posts | | | | Line Posts | | | |
|---|---|---|---|---|---|---|---|---|
| | | Round | Roll Formed | | | Round | | Roll Formed |
| | Length | (OD) | ⌊ | ☐ | Length | (OD) | H-Section | ☐ |
| 72" | ① 8'-6" | 2.375" | 3.50"x3.50" | 2.50"x2.50" | 8'-0" | 1.900" | 1.875"x1.625" | 1.875"x1.625" |

| | | |
|---|---|---|
| DESIGN APPROVED | STATE OF ARIZONA<br>DEPARTMENT OF TRANSPORTATION<br>DIVISION OF HIGHWAYS<br>STANDARD DRAWINGS | REV. 3/94 |
| APPROVED FOR DISTRIBUTION | FENCE, CHAIN LINK TYPE 2 | DRAWING NO. C-12.20<br>Sheet 2 of 3 |

| NO | DESCRIPTION OF REVISIONS | MADE BY | DATE |
|---|---|---|---|
| 1 | MODIFIED DRAWING | PNB | 3/94 |
| 2 | | | |
| 3 | | | |
| 4 | | | |

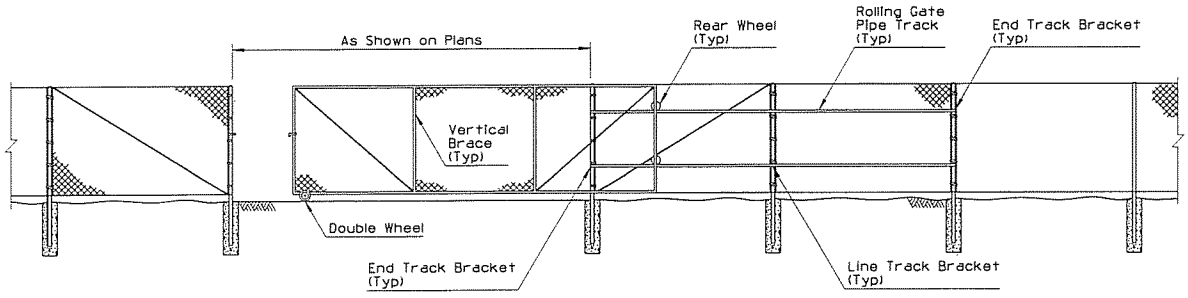


ROLLING GATE

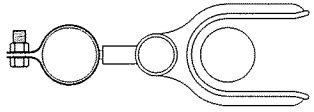

SECTION A-A
DOUBLE GATE LATCH ASSEMBLY

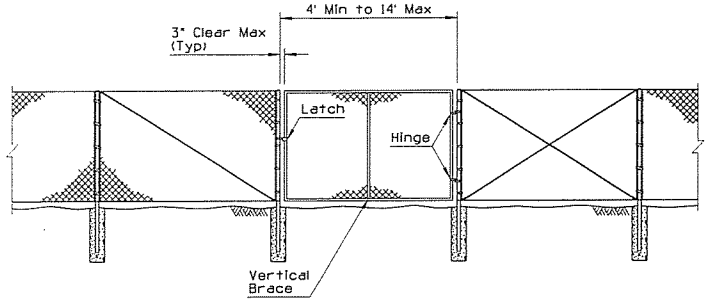


SINGLE GATE

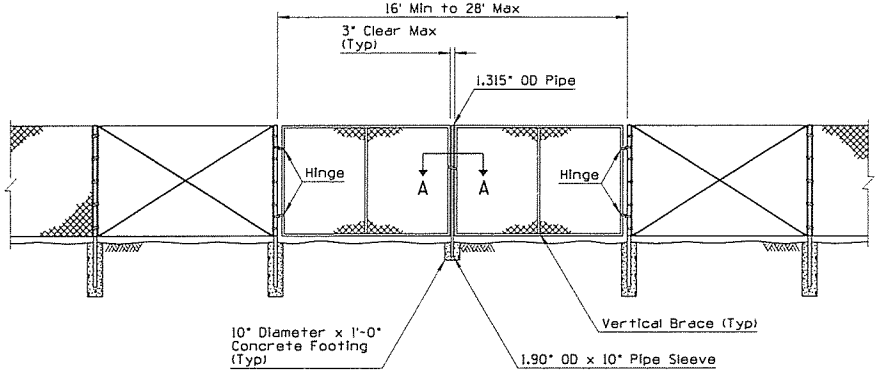


DOUBLE GATE

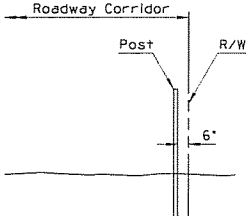


① TYPICAL FENCE LOCATION

| TYPICAL GATE DIMENSIONS | | | | | | | | | |
|---|---|---|---|---|---|---|---|---|---|
| SINGLE AND DOUBLE SWING GATES | | | | | | ROLLING GATES | | | |
| Gate Leaf Width | Vertical Braces | Gate Post Size | Gate Leaf Width | Vertical Braces | Gate Post Size | Gate Leaf Width | No of Equally Spaced Vertical Braces | Tension Rods Per Braced Panel | Gate Post Size |
| 6' H or Less | | OD | Over 6' H | | OD | | | | OD |
| 3' to 8' | 0 | 2.8750" | 3' to 8' | 0 | 2.8750" | 6' to 13' | 1 | 0 | 2.8750" |
| 8' to 16' | 1 | 4.0000" | 8' to 16' | 1 | 4.0000" | 13' to 16' | 1 | 1 | 2.8750" |
| 16' to 18' | 2 | 4.0000" | | | | 16' to 21' | 2 | 1 | 2.8750" |
| | | | | | | 21' to 27' | 2 | 1 | 2.8750" |
| | | | | | | 28' and Larger | 3 | 1 | 2.8750" |

GATES FOR CHAIN LINK FENCE - TYPE 1 SHOWN
(Type 2, With Barbed Wire Typical)

| | | |
|---|---|---|
| DESIGN APPROVED | STATE OF ARIZONA<br>DEPARTMENT OF TRANSPORTATION<br>DIVISION OF HIGHWAYS<br>STANDARD DRAWINGS | REV. 3/94 |
| APPROVED FOR DISTRIBUTION | FENCE, CHAIN LINK GATES | DRAWING NO. C-12.20<br>Sheet 3 of 3 |

# ARIZONA DEPARTMENT OF TRANSPORTATION

ENGINEERING RECORDS SERVICE
1655 West Jackson, Room 112-F - Phoenix, Arizona 85007-3217

Information
(602) 255-7498

*Striving To Provide You "Our Customers" with Excellence in Service.*

(602) 255-8216



RECEIVED
JUN 06 1994
ENGINEERING CONSULTANTS SERVICES


DATE: 05-31-94

TO: THOSE CONCERNED

FROM: VAL CARROLA
ENGINEERING RECORDS SERVICES

RE: Revision packet 5-11-94 for the Construction Details " C " Standars.

Please be advised that the above referenced publication is presently available. ADOT personnel and those under contract with ADOT may obtain the publication at the address listed above. The publication may be obtained over the counter by filling out a requisition form or by sending a request through the mail providing us with your Org number/contract number, telephone number, mail drop/street address, desired quantity and an authorized signature. Make reference to publication number REV-31-001 .

Should you have any questions, please call the telephone number above.

Thank you.

Completed with Information Bulletin 93-27