Initial Project Assessment

Quartzsite,
Plymouth Road

Federal Aid Project No.
TRACS No. 0000 LA QTZ SL 546 01C

Submitted To:

Arizona Department of Transportation

Prepared By:

The Holt Group
425 E. Main Street
Quartzsite, AZ 85346

December 2005

QUARTZSITE, PLYMOUTH ROAD

December 2005

TABLE OF CONTENTS

SECTION 1	**INTRODUCTION**	1
SECTION 2	**BACKGROUND DATA**	1
SECTION 3	**PROJECT SCOPE**	2
SECTION 4	**PROJECT DEVELOPMENT CONSIDERATIONS**	3
4A	ENVIRONMENTAL OVERVIEW	3
4B	OUTSIDE AGENCY INVOLVEMENT	4
4C	RIGHT-OF-WAY REQUIREMENTS	4
4D	UTLITY RELOCATION REQUIREMENTS	4
4E	SEASONAL CONSIDERATIONS	4
4F	TRAFFIC REQUIREMENTS	4
4G	DESIGN CRITERIA	4
4H	INTERGOVERNMENTAL AGREEMENT	4
SECTION 5	**OTHER REQUIREMENTS**	5
SECTION 6	**ESTIMATED COSTS**	5

FIGURES AND TABLES

1.	PROJECT VICINITY MAP	6
2.	ITEMIZED ESTIMATE	7
3.	DESIGN SCHEDULE	9
4.	TYPICAL CROSS SECTION	10
5.	15% PLANS	11

I. INTRODUCTION

The Quartzsite, Plymouth Road Project is located in the Town of Quartzsite, Arizona. The project consists of a 0.56 mile, twenty-five (25) foot wide combined landscaped and meandering paved pedestrian path along the easterly right-of-way of Plymouth Road beginning at Business 10 and traveling north for a distance of 2,950 feet terminating at Quail Trail Road and the Town Park (please refer to Figure 1, "Project Vicinity Map"). The entire Project Area is located within existing Town of Quartzsite right-of-way and no temporary construction easements (TCE's) will be needed to complete the project.

Currently, there are no sidewalks or landscaping along Plymouth Road from Business 10 to the Town Park. The purpose of this project is to enhance pedestrian safety and the visual aesthetics of Plymouth Road in the Town of Quartzsite by creating an aesthetically pleasing landscaped pedestrian pathway which will provide a buffer separation between pedestrian and vehicular traffic. The project will include the installation of an ADA compliant sidewalk, vegetation, an irrigation system, seating areas, and drinking fountains.

The total cost for this project is approximately $414,649. The project will be funded by the Federal Highway Administration with a total of $338,735 in federal funds for design and construction. The Town of Quartzsite will provide the overmatch in the amount of $75,912, covering all costs over the Federal Aid amount. It is anticipated that project construction will commence in May 2007.

Plymouth Road has been classified as a major collector, and as such, the project must be bid and administered by the Arizona Department of Transportation (ADOT). Subsequently, all submittals must be formatted according to ADOT standards. The proposed bid advertisement date is April 2007.

II. BACKGROUND DATA

Plymouth Road acts as a major corridor for the Town of Quartzsite, allowing access from Business 10 to the following community facilities: Town Hall, Town Library, Police Station, Magistrate Court, Community Services Building, Scholars Academy High School, La Paz County Justice Court, and the Town Park. Although a large number of Town residents, visitors and students alike utilize Plymouth Road as the main thoroughfare from Business 10 to the Town's community facilities, the shoulders of the Road remain unimproved. The proposed pathway, with its landscaping, sidewalk, shade and accessibility improvements, will provide greater connectivity through the Town and allow for a safer and more aesthetically pleasing access from the core of the Town to the Town's community facilities.

The Plymouth Road Project has received much support from community members, as well as Town Staff and Council. Public notices detailing the project scope and purpose have been sent out to property owners whose property lies adjacent to the proposed project, as well as to the Town of Quartzsite Chamber of Commerce and Town Hall. The Town of Quartzsite will continue solicitation for public input and

public information on the proposed project will remain available at Town Hall throughout the design and construction phases of the project.

Construction is slated to begin sometime during the summer of 2006. During construction, minor traffic control will be required when work is in progress. Due to construction taking place on only one side of Plymouth Road, impacts to traffic from construction should be minimal.

Known utilities in the project area consist of water, sewer, electrical and telephone lines. All of these utilities are underground, with the exception of the overhead power line. Relocation of any of the existing utilities is not anticipated. However, special caution should be taken regarding the trenching and planting of trees near any existing utilities. The design should avoid any impacts to utilities both underground and overhead. Before the project can be advertised for bid, it will be necessary for the design consultant to issue a Utility Clearance letter, with copies of letters from the utilities in the project area, to ADOT's Utilities & Roadway Section.

III. PROJECT SCOPE

The Quartzsite, Plymouth Road project consists of the construction of approximately 2,900 linear feet of an 8-foot wide colored concrete meandering pathway along the east side of Plymouth Road. The pathway will be located at least five feet from the roadway. ADA approved ramps will be located in the pathway at all intersections. An entry sign to the pathway will be installed on the northeast corner of B-10 and Plymouth Road identifying the project.

Landscaping will be installed adjacent to the pathway and shall consist of drought tolerant trees, shrubs and cactus, as well as decorative boulders. Signage will be included to identify some of the native vegetation. An irrigation system will be installed and decomposed granite will be utilized as mulch and for erosion control. Two shaded sitting areas with benches, about 20 seat walls, and drinking fountains will be also be incorporated into the project.

This Quartzsite Plymouth Avenue Beautification project is contingent upon the construction of a box culvert at the intersection of Plymouth Avenue and Mockingbird St to be built prior to the Beautification Project. The construction of the box culvert is being funded by WACOG Local Government Construction Program for fiscal year 2005/2006. This project is being funded under the HURF exchange method for $270,000. The Town of Quartzsite will absorb any costs above the HURF contribution, estimated at $29,234.The ADOT Project number is HRF-QTZ-0-807 and the TRACS number is HF10701C. The box culvert will be approximately 8'X64' designed to flow 1556 CFS consistent ADOT design criteria for the existing B10 box culvert directly upstream in Plamosa Wash. The box culvert will allow the Plymouth Avenue Beatification project to be constructed without any grade changes and provide a level roadway as well as guide storm water through the culverts into an existing natural wash. The box culvert project is currently in the design phase with bidding and construction to be completed by mid 2006 well ahead of the Plymouth Avenue Beautification project construction time period. The culvert project

will likely require a Clean Water Act Section 404 Project Development Permit. The same Engineers who are designing the box culvert project will be designing the Plymouth Avenue Beautification Project so therefore are fully aware of dimensions and timelines related to both projects. The timeline for the Construction of the Enhancement project will be tied to the timing of the construction of the box culvert.

IV. PROJECT DEVELOPMENT CONSIDERATIONS

The Town of Quartzsite will be responsible for the commission of any and all environmental surveys which the project will require, including the biological, archeological, and hazardous wastes surveys. These surveys will assist the designer in the preparation of the Project Assessment, the Environmental Determination, and project design plans which will be submitted to ADOT for review upon completion. It will be necessary for ADOT's Environmental & Enhancement Group to issue the Environmental Clearance before the project can be advertised for bid.

A. Environmental Overview

Potential Hazardous Waste Sites
There are no known hazardous waste sites within the project area. However, prior to environmental clearance, a Hazardous Waste Site Assessment will be performed by an ADOT approved consultant.

404 Permit
The construction activities will not involve the discharge of dredged or fill material into waters of the United States; therefore, no Clean Water Act Section 404 permit or Section 401 Water Quality Certification is required.

Flood Plain

The FIRM map community panel number 040134 0005A shows that a portion of the project lies within zone AE (areas susceptible to inundation during a 100-year flood). The floodway boundaries cross the project at the intersection of Plymouth and Mockingbird Streets, where there is currently an Arizona bridge crossing. Prior to the Plymouth Road Beautification Project planned for FY 06/07, a box culvert will be constructed at this intersection. The box culvert will provide a level roadway and eliminate drainage issues at this intersection.

Wetlands

There are no wetlands within or near the project site.

Archeological Clearance

There are no known archeological sites within the project area. The Town of Quartzsite will contract with an approved consultant to prepare an archeological

report for this project to be submitted along with the other required environmental surveys.

B. Outside Agency Involvement
The Town of Quartzsite will work closely with the Arizona Department of Transportation (ADOT throughout the entirety of the project. ADOT will review and provide comments on the project plans and specifications. Local residents will also have the opportunity to review and comment on the project. Once the project is completed, the Town of Quartzsite will be responsible for the maintenance of the pathway and landscaping.

C. Right-of-Way Requirements
The proposed project area is located entirely within the Town of Quartzsite right-of-way and does not conflict with any plans the Town has for Plymouth Road such as repaving or widening.

D. Utility Relocation Requirements
There are no known utilities within the project area which will require relocation. The meandering pathway can be constructed around the overhead power lines in the project area.

E. Seasonal Considerations
The construction of the proposed project should not experience any significant delays due to seasonal considerations. Summer monsoonal rains may cause a slight delay in construction if rainfall is considerable, but this condition is not likely to occur. Construction should end prior to the beginning of the Annual Town of Quartzsite Rock and Gem Show in January 2008, during which required lane closures may negatively affect traffic within the project area. Planting of landscape materials should be restricted from taking place during the hottest part of the summer or the coldest days during winter to ensure plant survival.

F. Traffic Requirements
Plymouth Road serves as a link between Business-10 and Highway 95. Traffic counts show that a large amount of truck traffic uses Plymouth Road as a connection between the two major transportation corridors, Interstate-10 and State Route-95. Lane closures may be necessary during certain portions of the construction of the pathway. All lane closures will be performed in accordance with the Manual of Uniform Traffic Control Devices.

G. Design Criteria
The Plymouth Road Beautification project will adhere to all design standards set forth by the Americans with Disabilities Act (ADA) and any applicable ADOT standards, La Paz County standards for Public Works, and MAG and AASHTO Roadway Design Standards with special consideration given to sight triangles, recovery areas, etc.

H. Intergovernmental Agreement
As noted above, because Plymouth Road is a major collector, this project does not qualify for self-administration. Thus, ADOT will bid and administer the project and

all plans, specifications and estimates have to be in ADOT format. ADOT's Engineering Consultant Section (ECS) will need to prepare the Intergovernmental Agreement before the project can be advertised for bids. The Town of Quartzsite can start design after a Notice to Proceed is given and can then request reimbursement for design expenses. The Town of Quartzsite will deposit the construction cost match and overmatch at ADOT prior to ADOT bidding the project.

The Public Works Department for the Town of Quartzsite is responsible for the maintenance program of the road which will continue after the construction of the path is complete. An Intergovernmental Agreement (IGA) will be made between the Town of Quartzsite and the Arizona Department of Transportation stipulating that the Town will be responsible for ongoing maintenance.

V. OTHER REQUIREMENTS

The Plymouth Road project will be funded by Federal TEA-21 funds and Town of Quartzite funds. The Town will pay all costs to be reimbursed by ADOT. The Town expects to bid this project in May of 2007.

VI. ESTIMATED COST

A. Design

Design costs for the Plymouth Road Project total $47,542. The Town of Quartzsite will be responsible for $22,635of the design costs, with $24,907 remaining to be paid by Federal funds.

B. Construction

The remaining $367,107 of the total project cost will be utilized for construction of the project with the exception of the $5,000.00 ADOT processing fee. $313,828 of the construction cost will be paid with Federal funds, with the Town paying the remaining $53,279 cost of construction.

QUARTZSITE VICINITY MAP

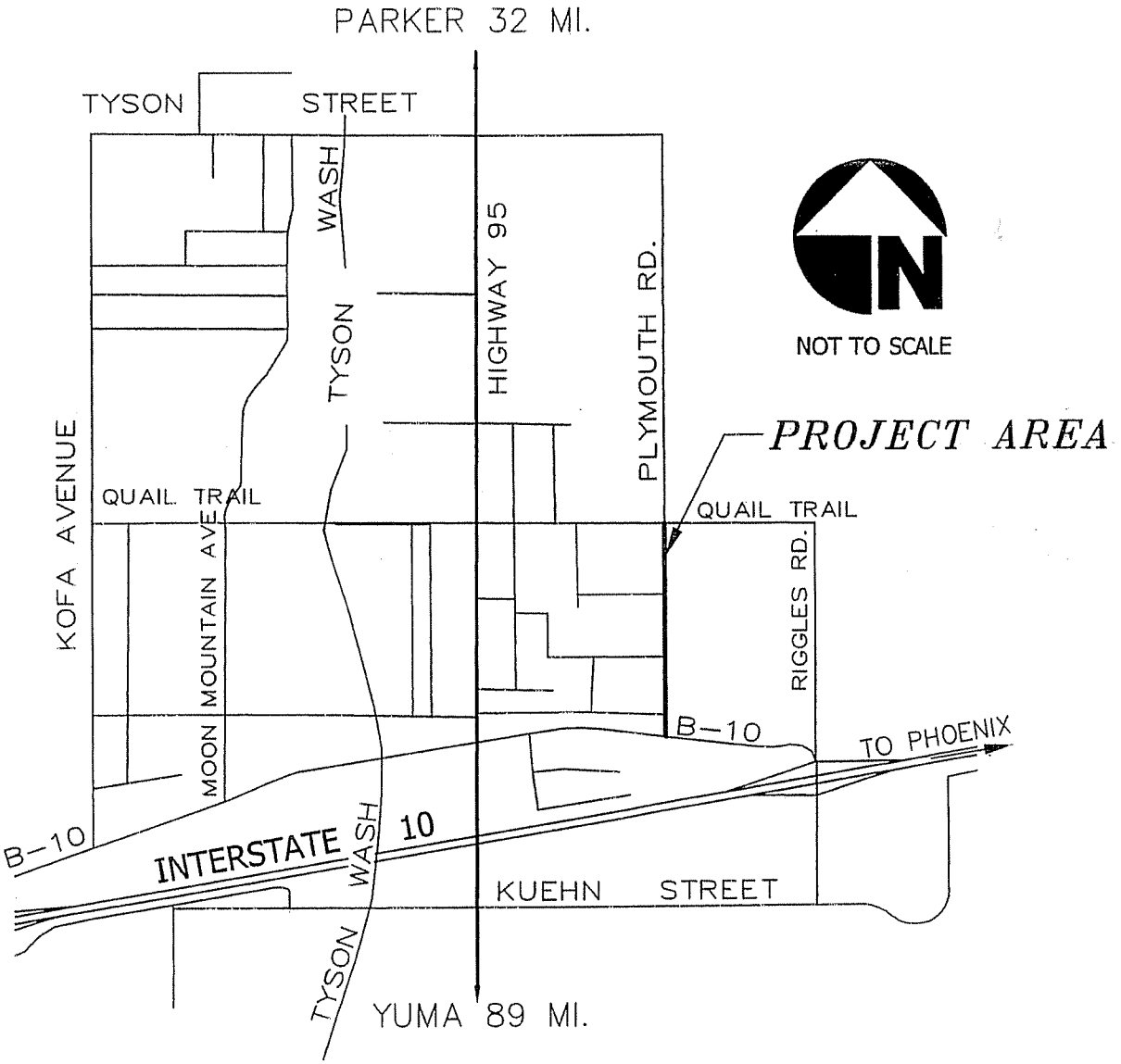

The Holt Group

Figure 2. Itemized Estimate

Item	Unit	Qty.	Unit price	Total Amount	Fed. Funds Not to exceed 94.3%	Local funds May exceed 5.7%
DESIGN 18%) (Will need to be paid back to FHWA if project is not built)				47,542	24,907	22,635
RIGHT-OF-WAY ACQUISITION				0	0	0
UTILITIES				0	0	0
TRAFFIC CONTROL (1%)				2,641	2,491	151
CLEARING AND SITE PREPARATION			Varies	10,000	9,430	570
DEMOLITION & REMOVAL OF EXISTING FEATURES			Varies	2,500	2,358	143
PATHWAY OR SIDEWALK	Sq. Ft.					
Concrete		1,200	4	4,200	3,961	239
Integral Color Concrete		22,400	6	123,200	116,178	7,022
Asphalt		0	2	0	0	0
PEDESTRIAN RAMP	Sq. Ft.	530	13	6,625	6,247	378
ENHANCED EXISITING CROSSWALKS	Sq. Ft.					
Concrete Paver			10	0	0	0
Stamped Asphalt			6	0	0	0
Stamped Concrete			8	0	0	0
Concrete			4	0	0	0
Integral Color Concrete			6	0	0	0
PEDESTRIAN LIGHTING	Each		2,500	0	0	0
TREES (15 GALLON) (MAX ALLOWABLE SIZE)	Each	60	75	4,500	4,244	257
TREES (5 GALLON)	Each		35	0	0	0
SHRUBS (5 GALLON)	Each	120	20	2,400	2,263	137
SHRUBS (1 GALLON)	Each	600	8	4,800	4,526	274
CACTUS (5 GALLON)	Each	120	35	4,200	3,961	239
DECOMPOSED GRANITE	Sq. Yd.	5,600	2	12,600	11,882	718
TOPSOIL	Cu.Yd.	0	35	0	0	0
SEEDING	Acre	0	1,200	0	0	0
TURF SOD	Sq. Yd.	0	4	0	0	0
BOULDERS	Each	40	250	10,000	9,430	570
IRRIGATION SYSTEM	L.Ft.					
Drip		45,400	1	27,240	25,687	1,553
Turf			1			

SLEEVING FOR IRRIGATION SYSTEM	L. Ft.					
Directional Bore			100	0	0	0
Cut and Patch			80	0	0	0
BENCHES	Each	2	800	1,600	1,509	91
SEATWALLS	Each	20	300	6,000	5,658	342
BIKE RACK	Each	0	350	0	0	0
TRASH RECEPTACLES	Each	0	250	0	0	0
DRINKING FOUNTAINS	Each	2	3,000	6,000	5,658	342
BOLLARDS	Each					
Stationary			200	0	0	0
Removable			500	0	0	0
TREE GRATES	Each		500		0	0
HANDRAIL	L. Ft.					
Standard			20	0	0	0
Decorative			50	0	0	0
LANDSCAPE HEADER CURB	L. Ft.	2,950	7	20,650	19,473	1,177
RETAINING WALL (Concrete)	Cu.Yd.		500	0	0	0
EDUCATIONAL SIGNS	EA	18	145	2,610	2,461	149
CURB & GUTTER	L. Ft.		10	0	0	0
COVERED (SHADE) STRUCTURE		2	7,500	15,000	14,145	855
MOBILIZATION (5%)				13,206	7,472	5,734
STORM WATER POLLUTION PREVENTION PLAN (If over 5 acres of total disturbance) (0.5% Typical)				0	0	0
LANDSCAPE ESTABLISHMENT (4.0%)				10,565	9,963	602
CONSTRUCTION SURVEY (3%)				7,924	7,472	452
CHANGE ORDERS (5% Typical)				14,923	14,072	851
CONSTRUCTION ADMINISTRATION (Avg. 18%)				53,723	23,288	30,435
PROJECT TOTAL COST				**414,649**	**338,735**	**75,914**
ADOT PROCESSING FEES ($3,000 to $5,000) (Does not count towards 5.7% required match)	Ea.	1	5,000	5,000	does not qualify	5,000
				419,649	**338,735**	**80,914**

Quartzsite,
Plymouth Road
Federal Aid Project #TEA QZT-0-(001)A
TRACS #0000 LA QTZ SL 546 01C
Estimated Progress Schedule

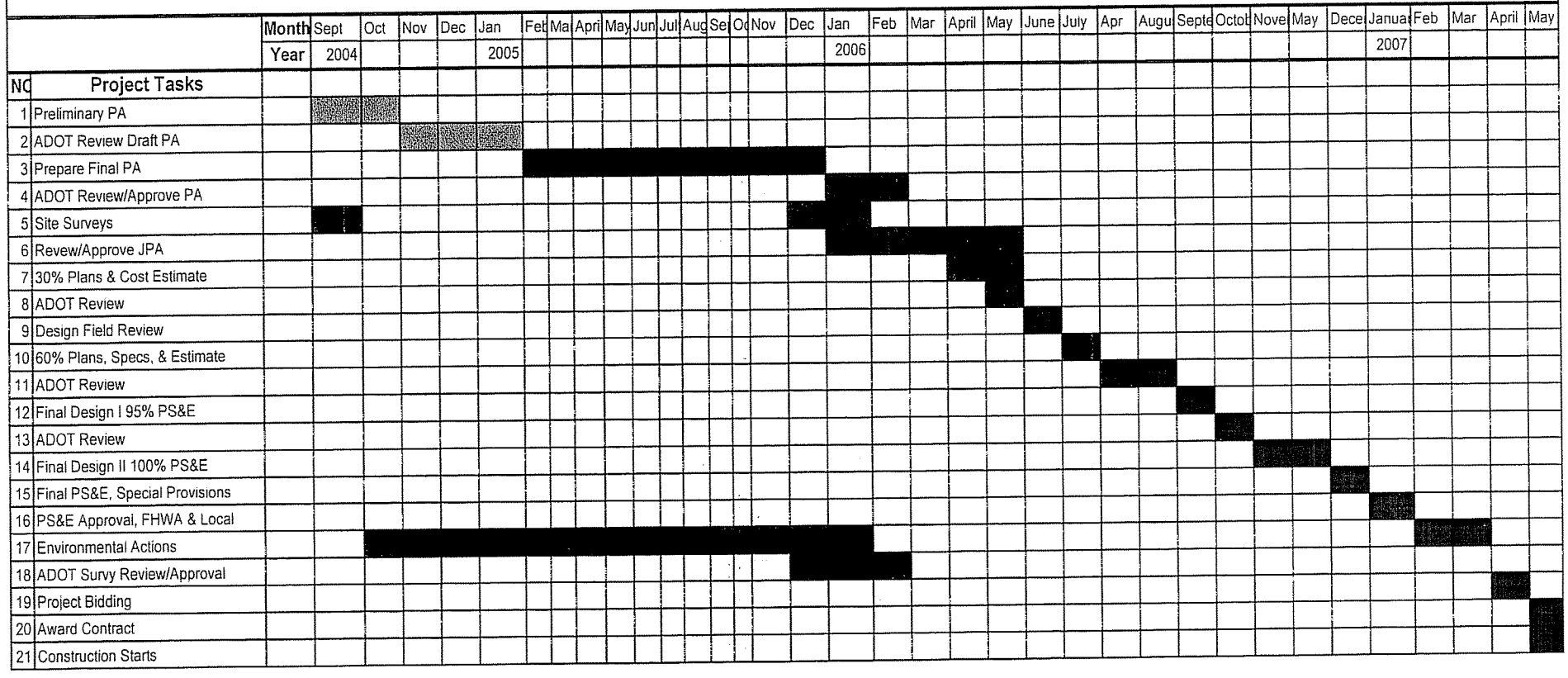

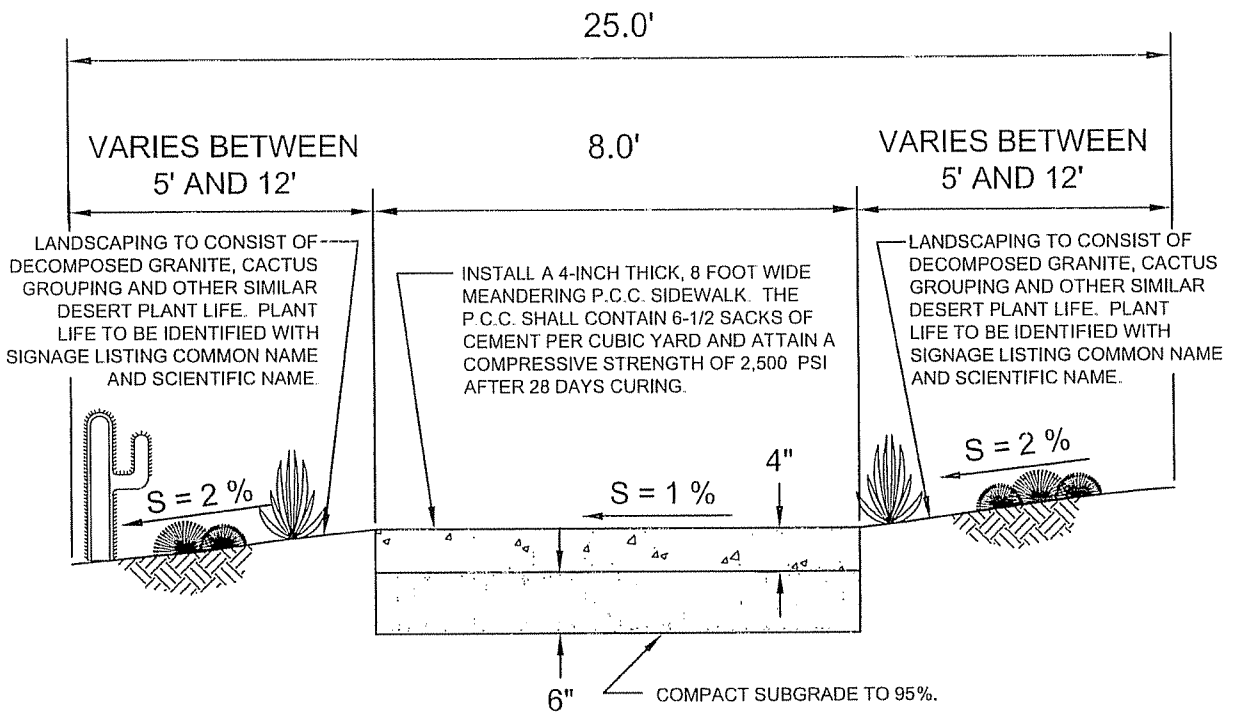

The Holt Group ENGINEERING · PLANNING · SURVEYING	QUARTZSITE, PLYMOUTH ROAD TYPICAL SECTION SKETCH	SHEET: 1 OF 1 SHEET
425 E. Main St. Quartzsite, AZ 85346 1561 S 4th St El Centro, CA 92243 321 W. Hobsonway, Suite A Blythe, CA 92225	928.927.8699 760 337 3883 760.922.4658	LOCATION: TOWN OF QUARTZSITE DATE: 5-31-05 THG PROJECT NO.: 692.025P BY: FH

CADFILE M:\692.025P\Schematic Pathway Plan 9-24-04.dwg

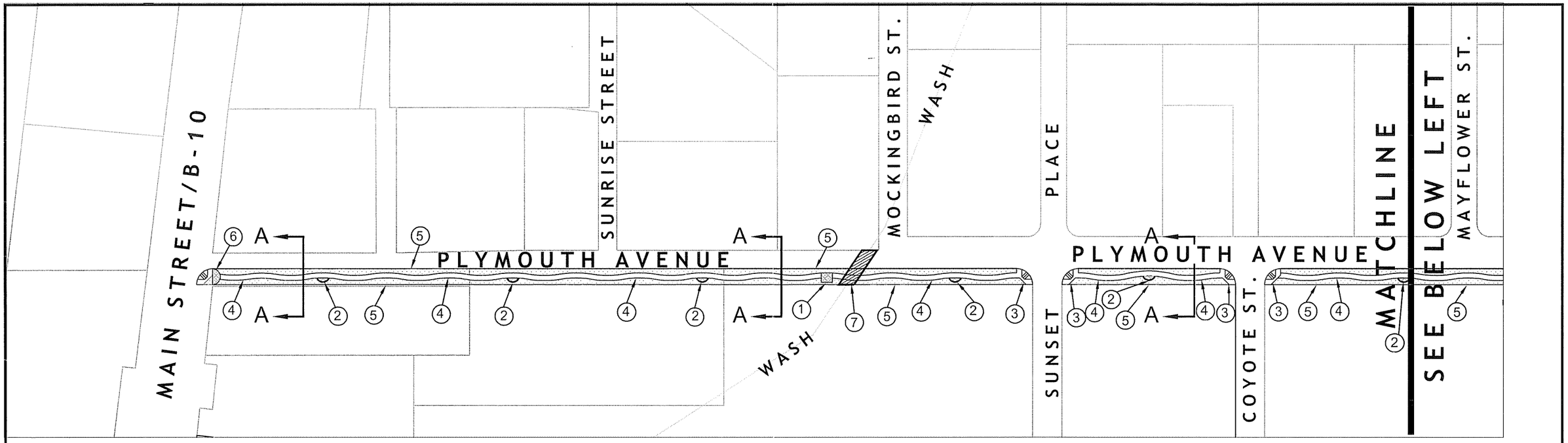

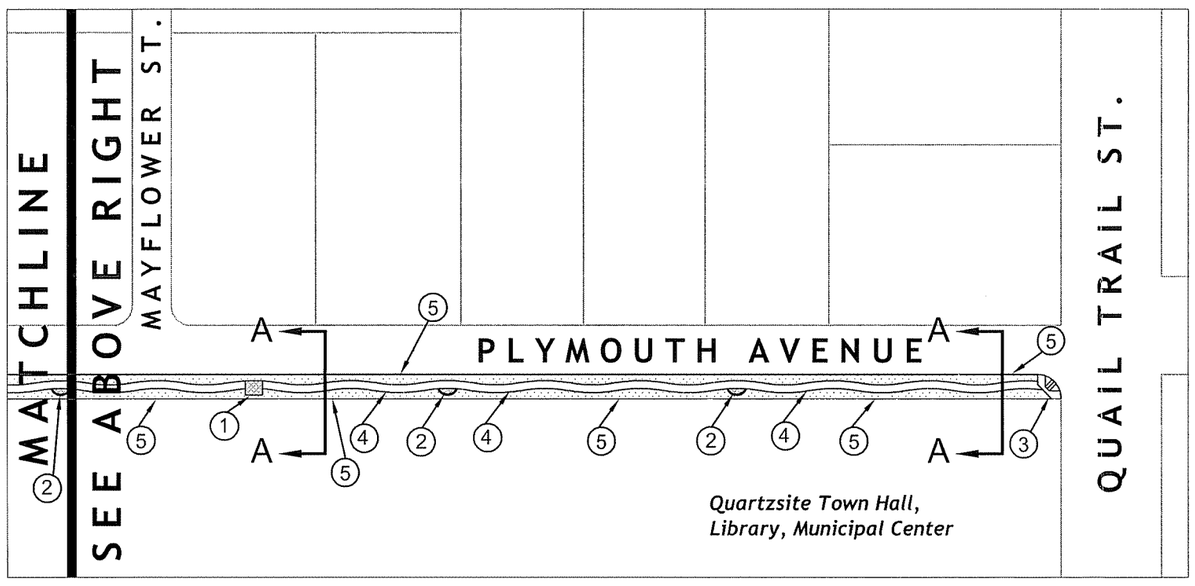

CONSTRUCTION KEYNOTES

1. INSTALL COVERED SEATING AREA WITH BENCHES AND DRINKING FOUNTAIN. PAVED AREA TO BE DECORATIVE STAMPED CONCRETE.
2. INSTALL 15" W X 24" H CONCRETE SITTING WALL AREA. PAVED AREA TO BE DECORATIVE STAMPED CONCRETE.
3. HANDICAP CURB RETURN TO COMPLY WITH ADA AND ADOT STANDARDS.
4. INSTALL 8-FOOT WIDE MEANDERING DECORATIVE STAMPED CONCRETE SIDEWALK.
5. LANDSCAPING TO CONSIST OF DECOMPOSED GRANITE, CACTUS GROUPING AND OTHER SIMILAR DESERT PLANT LIFE. PLANT LIFE TO BE IDENTIFIED WITH SIGNAGE LISTING COMMON NAME AND SCIENTIFIC NAME.
6. ENTRY AREA TO BE PAVED WITH 24-INCH SQUARE SCORED, STAMPED CONCRETE. INSTALL ENTRY SIGNAGE.
7. INSTALL BOX CULVERT APPROXIMATELY 8-FEET HIGH AND 6-FEET WIDE AT THE INTERSECTION OF MOCKINGBIRD STREET AND PLYMOUTH ROAD.

N

NOT TO SCALE

M:\692.025P\CAD\Schematic Pathway Plan 12-16-05.dwg 12/16/2005 10:00

The Holt Group
ENGINEERING · PLANNING · SURVEYING

425 E. Main St. | Quartzsite, AZ 85346 | 928.927.8699
1561 S. 4th St. | El Centro, CA 92243 | 760.337.3883
321 W. Hobsonway, Suite A | Blythe, CA 92225 | 760.922.4658

PLYMOUTH ROAD BEAUTIFICATION PROJECT

IMPROVEMENT PLAN (15%)

SHEET: 1 OF 1 SHEET

LOCATION: TOWN OF QUARTZSITE | DATE: 12-16-05 | BY: FH

THG PROJECT NO.: 692.025P