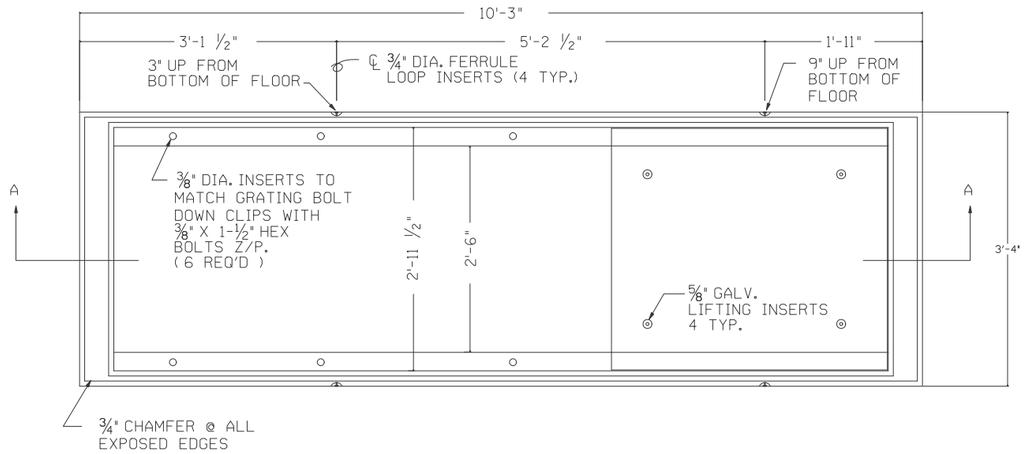

PLAN

DESIGN CODE AASHTO - DESIGN SPECS

1. CONCRETE SHALL CONFORM TO THE REQUIREMENTS OF CLASS S CONCRETE. CONCRETE COMPRESSIVE STRENGTH SHALL BE BASED ON 28 DAY TEST AGE AND SHALL REACH F'c OF 4500 PSI.
2. REINFORCING STEEL 60000 PSI. GRADE 60, STRUCTURAL STEEL SHALL CONFORM TO ASTM A-36.
3. WELDED WIRE FABRIC SHALL CONFORM TO ASTM A185
4. GROUT SHALL BE IN ACCORDANCE WITH STANDARD SPECIFICATIONS EXCEPT WATER CONTENT SHALL BE SUCH THAT THE CONSISTENCY IS PROPER FOR SMOOTH TROWELING.
5. GRATE CROSS RODS SHALL BE RESISTANCE WELDED, FILLET WELDED OR ELECTRO-FORGED TO BEARING BARS.
6. FOUNDATION SOIL AND BACKFILL SHALL BE COMPACTED TO NO LESS THAN 95% OF THE MAXIMUM DENSITY DETERMINED IN ACCORDANCE WITH THE REQUIREMENTS OF THE MATERIALS TESTING MANUAL OFF THE MATERIALS SERVICES.

ALL STRUCTURAL STEEL SHALL RECEIVE 1 SHOP COAT OF VALSPAR PRIMER 13F28 GRAY (ADOT), OR APPROVED EQUAL, NOT LESS THAN 2 MILS DRY.

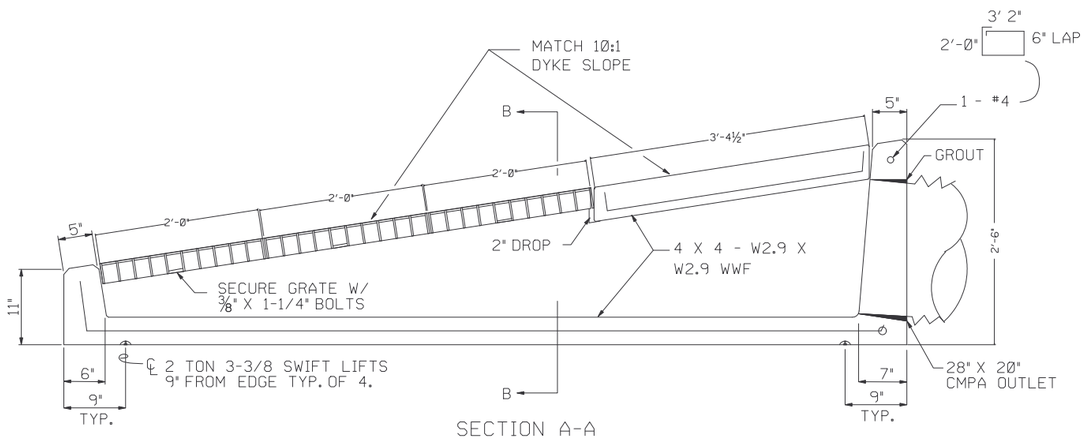

SECTION A-A

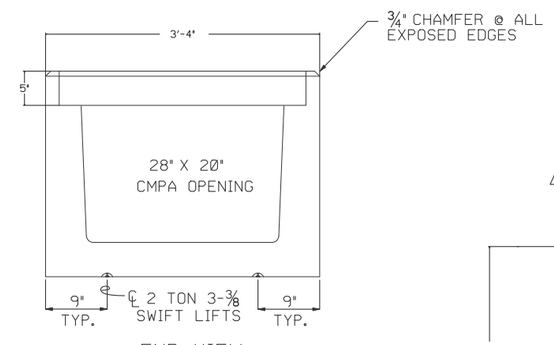

END VIEW

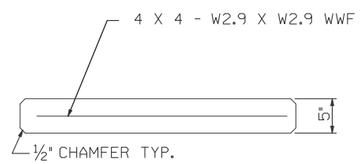

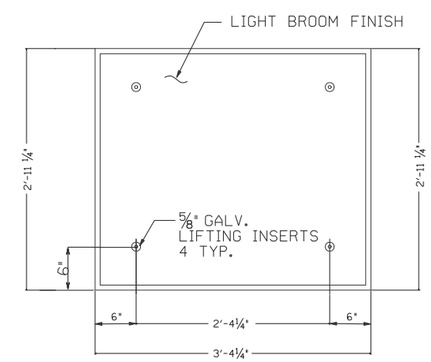

CONCRETE COVER DETAIL

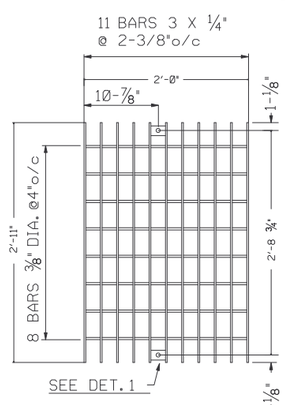

GRATE PLAN
(3 GRATES REQ'D)

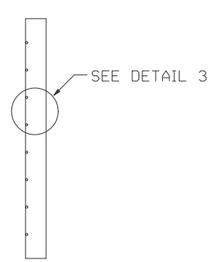

GRATE SIDE

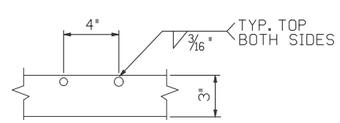

DETAIL 3

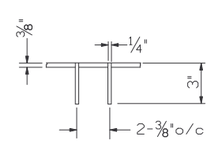

DETAIL 2

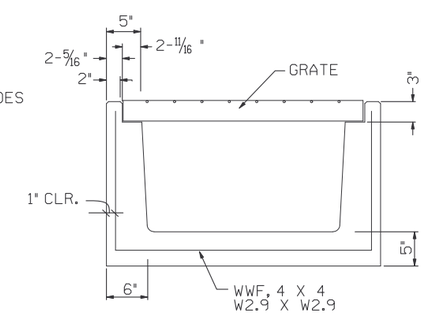

SECTION B-B

PRECAST CONCRETE
ALTERNATE TO ADOT STD. C-15.90

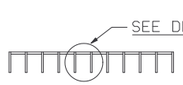

GRATE END

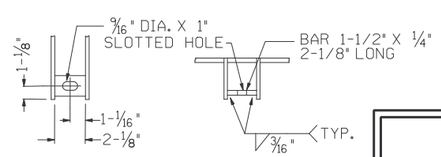

DETAIL 1

APPROVED VIA ADOT
PRIDE PROGRAM: 02/16/05

REVISIONS

PRE-CAST MFG. CO.
301 W. BROADWAY, P.O. BOX 8186 (602) 276-4341
PHOENIX, ARIZONA. 85066 FAX. (602) 276-2907

TITLE: ARIZONA DOT
CATCH BASIN C15.90 - MOD

DWN:	JIM MARTIN	DWG. NO.	CB-1590
DATE:	1 - 31 - 03	REF. NO.	
SCALE:	N.T.S.	SHT:	1 OF 1