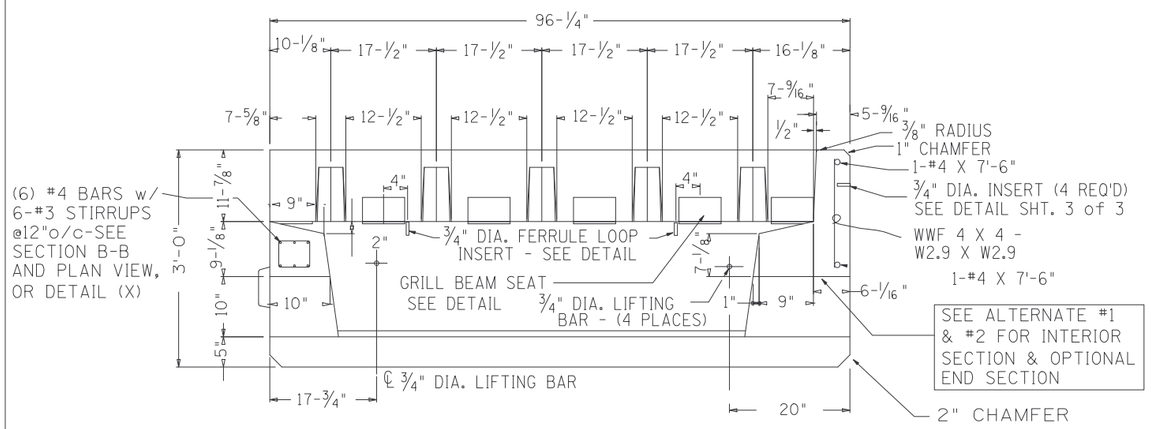

SECTION A-A (STANDARD END SECTION)

(APPROX. WEIGHT 8440 LBS.)

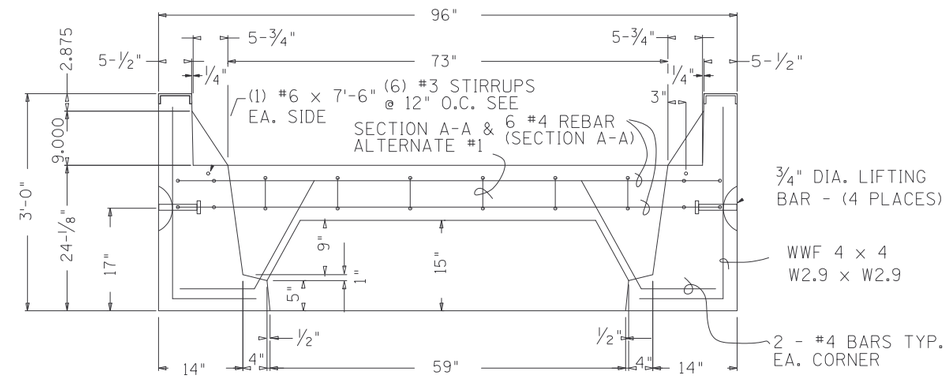

SECTION B-B

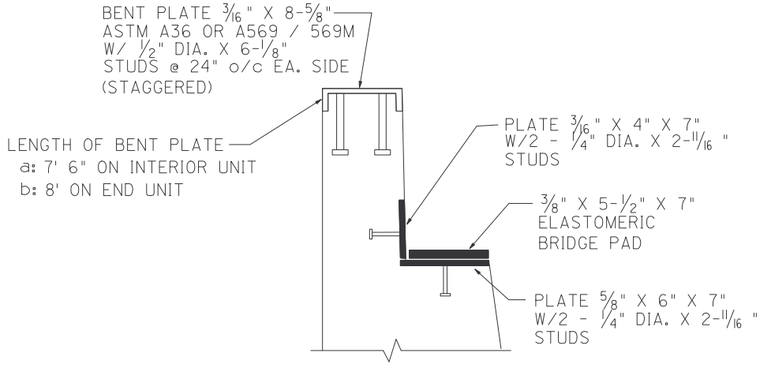

SECTION

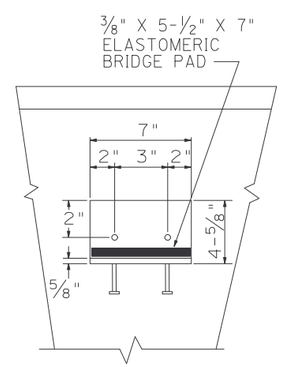

ELEVATION

TYPICAL GRILL BEAM SEAT

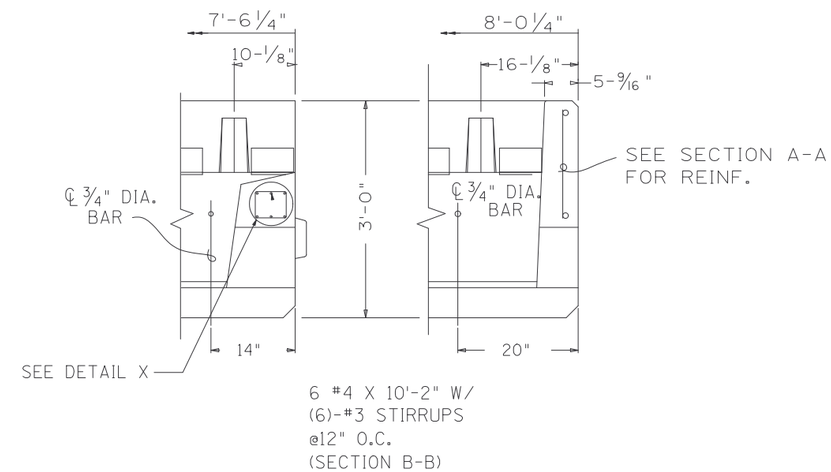

ALTERNATE #1
(INTERIOR SECTION)

ALTERNATE #2
(OPTIONAL END SECTION)

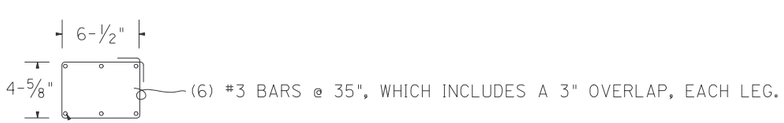

6 EA #4 BARS @ 10'-2"

DETAIL X (STIRRUP DETAIL)

ALL STRUCTURAL STEEL SHALL RECEIVE 1 SHOP COAT OF ADOT PAINT No. 1, NOT LESS THAN 2 MILS DRY.

ALL REINFORCING SHALL HAVE A MIN. OF 2" CLEAR COVER UNLESS NOTED OTHERWISE.

APPROVED VIA ADOT
PRIDE PROGRAM: 02/16/05

REVISIONS

PRE-CAST MFG. CO.
301 W. BROADWAY, P.O. BOX 8186 (602) 276-4341
PHOENIX, ARIZONA. 85066 FAX, (602) 276-2907

TITLE: ARIZONA ADOT CATTLEGUARD FOUNDATION - DETAILS

DWN: JIM MARTIN		DWG. NO. ADOT-CGF
DATE: 1 - 31 - 03		REF. NO. L3
SCALE: N.T.S.		SHT: 3 of 5