ARIZONA DEPARTMENT OF TRANSPORTATION
ROADWAY ENGINEERING GROUP
OFFICE MEMO

April 24, 1997

TO: All Users of Construction Standards

FROM: THO Terry H. Otterness, Design Program Manager, Roadway Engineering Group

RE: Revisions to Construction Standards - Metric Version

Several changes are being made to Construction Standard Drawings and the Construction Standards Index.

These revisions result from a Value Engineering Study on catch basins and affect Standards C-15.10 through C-15.81; Std. C-15.60 is deleted and Std. C-15.75 remains unchanged.

The Catch Basin Standards reflect significant changes including using only one type (EF) and size of grate and frame, placing the grate against the pavement edge to increase the amount of grate opening without encroaching into the pavement, changing the nose angle to a bent plate for curb opening catch basins to decrease and simplify forming, changing the access cover to the round cover used by the City of Phoenix, clarifying the use of catch basins with wide gutters, clarifying notes, and changing depth of wing walls to simplify forming. Revisions are indicated on each specific drawing.

Std. C-10.67 is a new standard for Concrete Median Barrier, Tall Type 'F', Cast in Place.

May, 1997

TO: ALL USERS OF THE CONSTRUCTION STANDARD DRAWINGS

FROM: THOMAS H. SCHECK, STANDARDS ENGINEER THO

RE: ERRATA SHEET - METRIC

ERRATA

The following revisions should be made to the Construction Standards dated June, 1995 (Metric). These revisions will remain in effect until new Standard Sheets are revised and distributed.

REVISED DRAWING	REVISION
C-05.20 Sheet 1	Only one expansion joint is required on each side of the driveway as shown on "DRIVEWAY WITH SIDEWALK ADJACENT TO CURB" these are the exterior joints, only. When the driveway is concrete, another expansion joint is needed along the backside of the sidewalk between the sidewalk and the driveway in all cases where the sidewalk crosses the driveway.
C-05.50	All references to "Class 2 AB" should be changed to read "Cement-Treated Slurry" on "SECTION B-B".
C-07.01 Sheet 1	Delete drawing "TRANSVERSE CONSTRUCTION JOINT, TC Joint Non-Skewed Joint". The drawing "TRANSVERSE CONSTRUCTION JOINT, TC Skewed Joint" shall apply to both skewed and non-skewed joints.
C-07.04	Under "GENERAL NOTES" change the "Minimum" to "Maximum" at "varies - 5.4 Minimum".
C-07.05	Under "GENERAL NOTES" change the "Minimum" to "Maximum" at "varies - 5.4 Minimum".
C-07.10	As shown on "CROSSROAD AT RAMP TERMINAL" delete the note "Expansion Joint Spacing (18 Max) (Typical)".

REVISED DRAWING	REVISION
C-10.31 Sheet 2 and 3	As shown on "Guard Rail Transition (Timber Post)/(Steel Post) under "ELEVATION" delete the notes about "Rectangular Plate Washers". This type washer should not be used on these two large posts.
C-10.44	Under "SOIL PLATE DETAIL" the reference to "19 mm Hole" change this to read "21 mm Hole". Also change the reference to "130" to "152".
C-10.45	Under "GENERAL NOTES" add this note as 5. - Bearing plate shall conform to ARTBA Standard F-41-79 except that the dimension from the bottom of the plate to the center of the hole shall be 57mm.
C-10.66	Under "GENERAL NOTES" in note 1. change "Half" to "Median".
C-13.25	Do not use "TYPE 1, RIVITED OR BOLTED CONNECTIONS" or "TYPE 5, SLIP SEAM CONNECTIONS". This standard applies to both round or arch pipes, however only the round are shown. This drawing is still applicable for "L" on end sections.
C-13.30	Under "GENERAL NOTES" in note 7. change "Std. C-14.20" to "Std. B-11.12".
C-13.60	All references to "AB Class 2" should be changed to read "Cement-Treated Slurry" on "TYPE D & G CURB AND GUTTER WITH SLOTTED DRAIN" and "TYPE B OR C CURB AND GUTTER WITH SLOTTED DRAIN".

Metric

CONSTRUCTION STANDARD - INDEX

DRAWING NO.	TITLE
C-01.10	SYMBOL LEGEND
C-01.11	SYMBOL LEGEND
C-01.12	SYMBOL LEGEND
C-01.13	SYMBOL LEGEND
C-01.30	GENERAL ABBREVIATIONS
C-01.31	GENERAL ABBREVIATIONS
C-01.32	GENERAL ABBREVIATIONS
C-02.10	SLOPES, INTERSTATE
C-02.20	SLOPES, PRIMARY ROADWAYS
C-02.30	SLOPES, SECONDARY/MISC ROADWAYS
C-02.50	SUPERELEVATION DISTRIBUTION
C-03.10	DITCHES, CHANNELS, DIKES AND BERMS (5 SHEETS)
C-04.10	SPILLWAY, EMBANKMENT
C-04.20	DOWNDRAIN, EMBANKMENT
C-04.30	SPILLWAY LENGTH TABLE
C-04.40	DOWNDRAIN LENGTH TABLE
C-04.50	DOWNDRAIN ENERGY DISSIPATOR
C-05.10	SINGLE CURB, CURB & GUTTER EMBANKMENT CURB
C-05.11	RAMP CURB & GUTTER LAYOUT (2 SHEETS)
C-05.12	CURB & GUTTER TRANSITIONS (3 SHEETS)
C-05.20	CONCRETE DRIVEWAYS & SIDEWALKS (2 SHEETS)
C-05.30	SIDEWALK RAMP (4 SHEETS)
C-05.40	MEDIAN PAVING AND NOSE TRANSITION
C-05.50	CONCRETE BUS BAY
C-06.10	DRIVEWAY & TURNOUT LAYOUTS (2 SHEETS)
C-07.01	PCCP JOINTS (2 SHEETS)
C-07.02	LOAD TRANSFER DOWEL ASSEMBLY
C-07.03	MAINLINE PCCP JOINT LOCATIONS (8 SHEETS)
C-07.04	ENTRANCE RAMP PCCP JOINTS
C-07.05	EXIT RAMP PCCP JOINTS
C-07.06	TRENCH BACKFILL AND PAVEMENT REPLACEMENT
C-07.10	CROSSROAD PCCP JOINTS
C-08.10	RAMP GEOMETRICS-SINGLE LANE RAMPS
C-08.20	PAVED GORE AREA
C-09.10	GROOVING FOR BITUMINOUS SHOULDERS

DRAWING NO.	TITLE
C-10.01	TYPE A GUARD RAIL INSTALLATION, REFLECTOR TAB
C-10.02	TYPE B GUARD RAIL INSTALLATION, REFLECTOR TAB
C-10.03	MEASUREMENT LIMITS FOR W BEAM AND THRIE BEAM SYSTEM (2 SHEETS)
C-10.06	HALF BARRIER TERMINAL W/TYPE B OR C CURB & GUTTER
C-10.15	BARRIER DETAILS AT PIERS
C-10.20	G4(1W) AND G4(2W) BLOCKED OUT W BEAM (TIMBER POST)
C-10.21	G4(1S) AND G4(2S) BLOCKED OUT W BEAM (STEEL POST)
C-10.22	G4(MODIFIED) BLOCKED OUT W BEAM WITH SPECIAL CURB AND GUTTER (2 SHEETS)
C-10.23	G9(A) AND G9(B) BLOCKED OUT THRIE BEAM (STEEL POST)
C-10.24	G9(C) BLOCKED OUT THRIE BEAM (STEEL POST)
C-10.28	NESTED STEEL W BEAM (2 SHEETS)
C-10.29	BOLTED ANCHOR GUARD RAIL (2 SHEETS)
C-10.30	GUARD RAIL TRANSITION, W BEAM TO CONCRETE HALF BARRIER (APPROACH) (3 SHEETS)
C-10.31	GUARD RAIL TRANSITION, W BEAM TO CONCRETE HALF BARRIER (APPROACH) (WITH CURB) (3 SHEETS)
C-10.32	GUARD RAIL TRANSITION, W BEAM TO CONCRETE HALF BARRIER (DEPARTURE) (3 SHEETS)
C-10.39	HARDWARE FOR W BEAM TRANSITION TO CONCRETE BARRIER
C-10.40	GUARD RAIL EXTRUDER TERMINAL, GET-1 (2 SHEETS)
C-10.41	GUARD RAIL EXTRUDER TERMINAL, GET-2 (2 SHEETS)
C-10.44	HARDWARE FOR GUARD RAIL EXTRUDER TERMINAL (3 SHEETS)
C-10.45	GUARD RAIL ANCHOR ASSEMBLY STEEL TERMINAL POST
C-10.60	HALF BARRIER, CAST IN PLACE, SLIP FORM & FIXED FORM
C-10.61	HALF BARRIER, PRECAST
C-10.62	CONCRETE HALF BARRIER WITH GUTTER
C-10.64	HALF BARRIER (AT PIERS) (2 SHEETS)
C-10.65	HALF BARRIER WITH SIDEWALK
C-10.66	MEDIAN BARRIER, CAST IN PLACE, SLIP FORM & FIXED FORM
C-10.67	CONCRETE MEDIAN BARRIER, TALL TYPE 'F', CAST IN PLACE
C-10.68	MEDIAN BARRIER, PRECAST
C-10.70	CONCRETE HALF BARRIER TRANSITION (4 SHEETS)
C-10.71	CONCRETE HALF BARRIER TRANSITION (3 SHEETS)
C-10.74	HARDWARE FOR CONCRETE BARRIER TRANSITIONS
C-10.75	BARRIER TRANSITION-TANGENT-DEPARTURE TYPES 1, 2, AND 3 (3 SHEETS)
C-10.76	BARRIER TRANSITION-CURVE
C-10.80	RUB RAIL (2 SHEETS)
C-10.83	HARDWARE FOR RUB RAIL
C-10.97	GLARE SCREEN, CONCRETE MEDIAN BARRIER (3 SHEETS)
C-11.10	ROADWAY CATTLE GUARD (3 SHEETS)
C-11.20	CATTLE GUARD, DRAINAGE
C-11.30	CATTLE GUARD, RAILROAD
C-12.10	FENCE, WOVEN AND BARBED WIRE WITH GATES (5 SHEETS)
C-12.20	FENCE, CHAIN LINK TYPES 1 AND 2 WITH GATES (3 SHEETS)
C-12.30	CHAIN LINK CABLE BARRIER (3 SHEETS)

Metric

CONSTRUCTION STANDARD - INDEX

DRAWING NO.	TITLE
C-13.10	PIPE CULVERT INSTALLATION (2 SHEETS)
C-13.15	TYPICAL PIPE INSTALLATION
C-13.20	PIPE, REINFORCED CONCRETE END SECTION
C-13.25	PIPE, CORRUGATED METAL, END SECTION
C-13.30	PIPE & PIPE ARCH, CORRUGATED METAL CONCRETE INVERT PAVING
C-13.55	PIPE, CATTLE-VEHICLE PASS, MITERED END TREATMENT
C-13.60	SLOTTED DRAIN DETAILS
C-13.65	SLOTTED DRAIN INSTALLATION DETAILS
C-13.70	STORM DRAIN CONNECTION DETAILS
C-13.75	STORM DRAIN OUTLET DETAILS (2 SHEETS)
C-13.80	PIPE COLLAR DETAILS
C-15.10	CATCH BASIN, TYPE 1
C-15.20	CATCH BASIN, TYPE 3 (2 SHEETS)
C-15.30	CATCH BASIN, TYPE 4
C-15.40	CATCH BASIN, TYPE 5 (2 SHEETS)
C-15.50	CATCH BASIN, GRATES
C-15.60	DELETED
C-15.65	CATCH BASIN ACCESS, FRAME AND COVER DETAILS
C-15.70	CATCH BASIN MISC. DETAILS (2 SHEETS)
C-15.75	CATCH BASIN, DROP INLET
C-15.80	CATCH BASIN, MEDIAN FLUSH
C-15.81	CATCH BASIN, MEDIAN, SIDE SLOPE
C-15.90	CATCH BASIN, MEDIAN DIKE, PRECAST
C-15.91	FREEWAY CATCH BASIN DETAILS (2 SHEETS)
C-15.92	SPECIAL CATCH BASIN WITH HALF BARRIER
C-16.10	IRRIGATION HEADWALLS 460 TO 1520 mm DIAMETER PIPES
C-16.20	IRRIGATION STANDPIPES
C-16.30	IRRIGATION VALVE AND GATE
C-16.40	IRRIGATION SLEEVES
C-17.10	BANK PROTECTION, RAIL TYPES 1, 2 & 3
C-17.20	BANK PROTECTION, RAIL TYPES 4, 5 & 6

DRAWING NO.	TITLE
C-18.10	MANHOLE DETAILS
C-18.20	MANHOLE FRAME & COVER DETAILS
C-18.30	MISCELLANEOUS MANHOLE DETAILS
C-18.40	MANHOLE RISER DETAILS
C-19.10	FORD - CONCRETE WALLS
C-19.20	FORDS - TYPES 1 & 2
C-21.10	SURVEY MONUMENT, FRAME AND COVER, RIGHT OF WAY MARKER
C-21.20	STANDARD MARKER
C-22.10	UTILITY LINE, PROTECTIVE CONCRETE SLAB
C-22.15	SANITARY SEWER ENCASEMENT
C-22.20	PIPE SUPPORT ACROSS TRENCHES (3 SHEETS)
C-22.25	PRECAST SANITARY SEWER MANHOLES
C-22.30	STUB OUT AND PLUG
C-22.35	DROP SEWER CONNECTIONS
C-22.40	SEWER CLEANOUT
C-23.10	THRUST BLOCKS FOR WATER LINES
C-23.15	BLOCKING FOR WATER VALVES GATE AND BUTTERFLY
C-23.20	ANCHOR BLOCK FOR VERTICAL BENDS
C-23.25	VERTICAL REALIGNMENT FOR WATER MAINS
C-23.30	VALVE BOX INSTALLATION (2 SHEETS)
C-23.35	TAPPING SLEEVE AND VALVE INSTALLATION
C-23.40	JOINT RESTRAINT WITH TIE RODS
C-23.45	CONCRETE WATER METER BOX
C-23.50	STEEL COVER FOR WATER METER BOX
C-23.55	WATERLINE-CUT AND PLUG 300 mm DIA. MAIN AND SMALLER
C-23.60	HYDRANT INSTALLATION
C-23.65	FIRE HYDRANT LOCATIONS

NO	DESCRIPTION OF REVISIONS	MADE BY	DATE
1			
2			
3			
4			

Metric

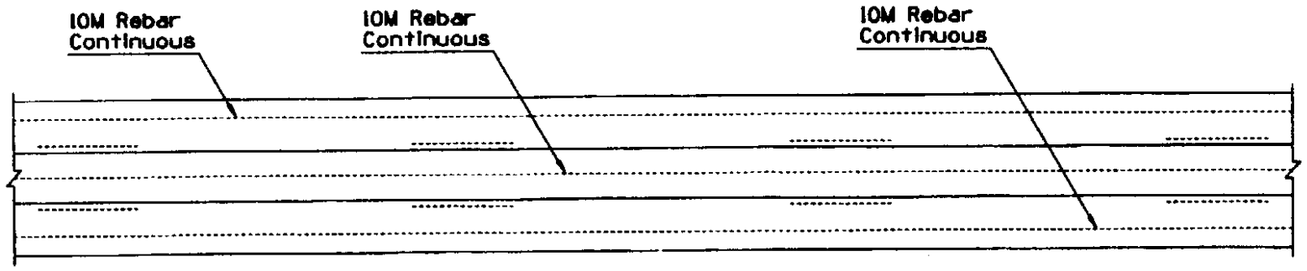

PLAN

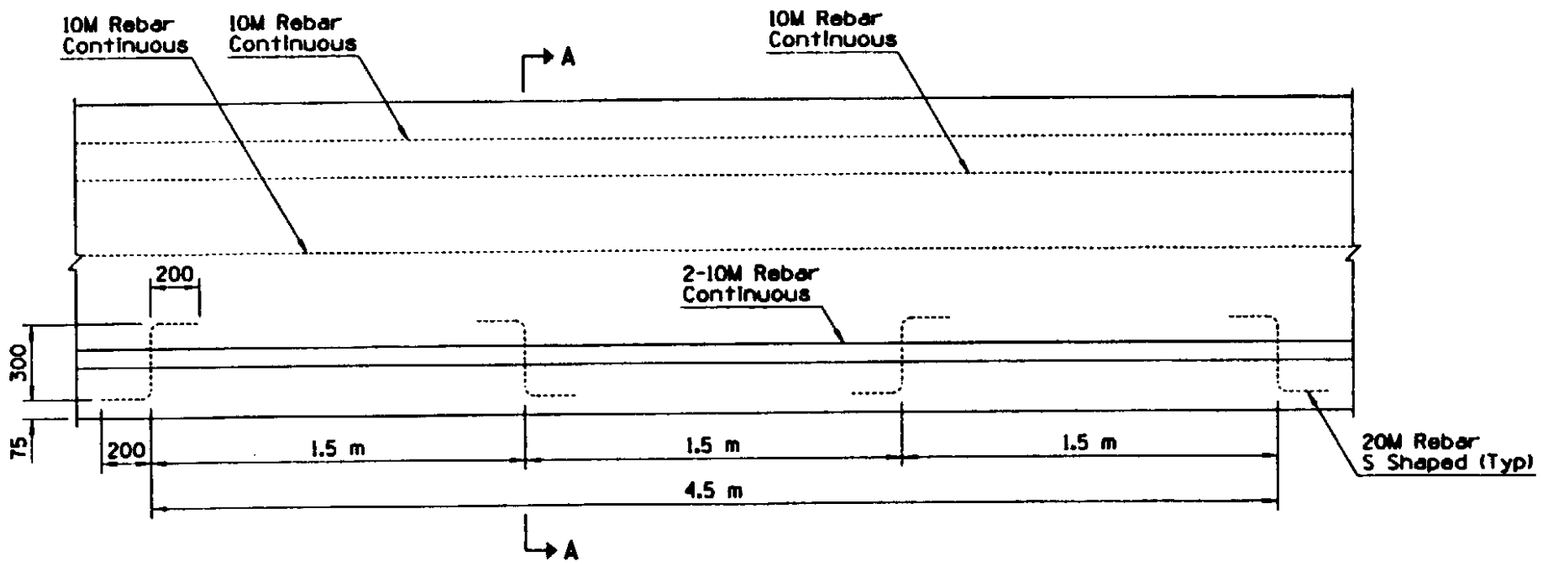

ELEVATION

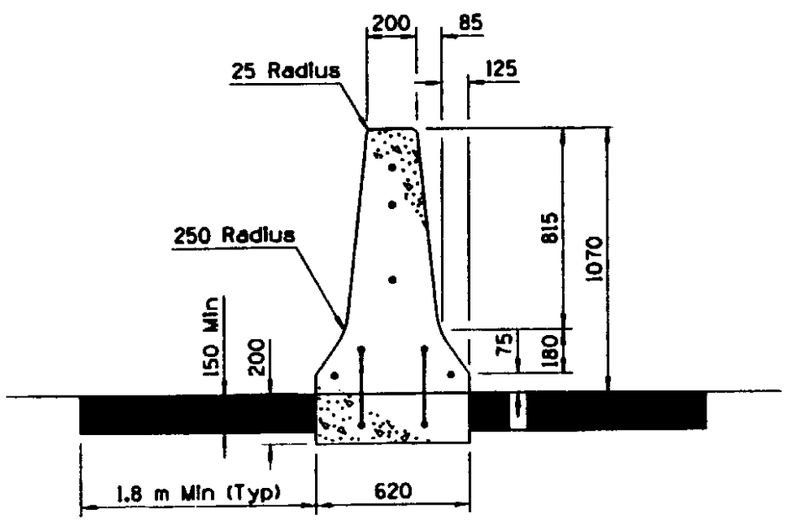

WITH AC PAVEMENT
SECTION A-A

GENERAL NOTES

1. Median Barrier shall be constructed by the slip form or by the formed Cast-in-Place method.
2. When obstacles are encountered which prevent the use of slip form equipment, the closure shall be accomplished by the use of stationary forms.
3. Concrete shall be Class S, design strength f'_c=20 MPa.
4. If the footing and barrier are cast monolithically, 10M S shaped rebars will not be required.
5. In no case shall the width of barrier exceed the width of the barrier footing or overhang the adjacent pavement.
6. 10M Rebar shall extend 300 mm past the construction joint at the completion of the day's pour.

▲ Depth to match adjacent PCCP thickness (200 mm Min).

Unless otherwise noted, all dimensions are in millimeters.

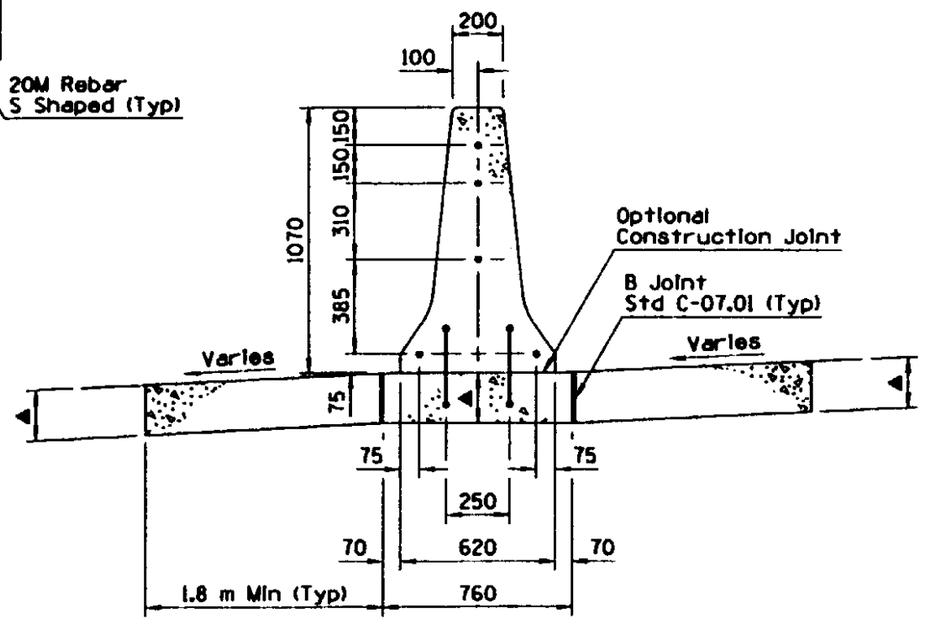

WITH PCC PAVEMENT
SECTION A-A

DESIGN APPROVED	STATE OF ARIZONA DEPARTMENT OF TRANSPORTATION INTERMODAL TRANSPORTATION DIVISION STANDARD DRAWINGS	ISSUE 5/97
APPROVED FOR PUBLICATION	CONCRETE MEDIAN BARRIER TALL TYPE 'F' CAST IN PLACE	DRAWING NO. C-10.67

Metric

NO	DESCRIPTION OF REVISIONS	MADE BY	DATE
1	REVISED STD FOR NEW FRAME AND NOSE PLATE	PNB	5/97
2	REVISED DETAIL	PNB	5/97
3	REVISED FLOOR FOR POURING AFTER WALLS	PNB	5/97
4	ADDED DETAIL OR NOTE	PNB	5/97

Metric

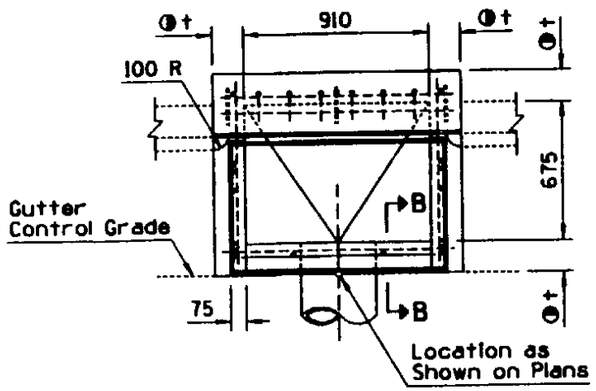

PLAN - CATCH BASIN TYPE 1 - SINGLE

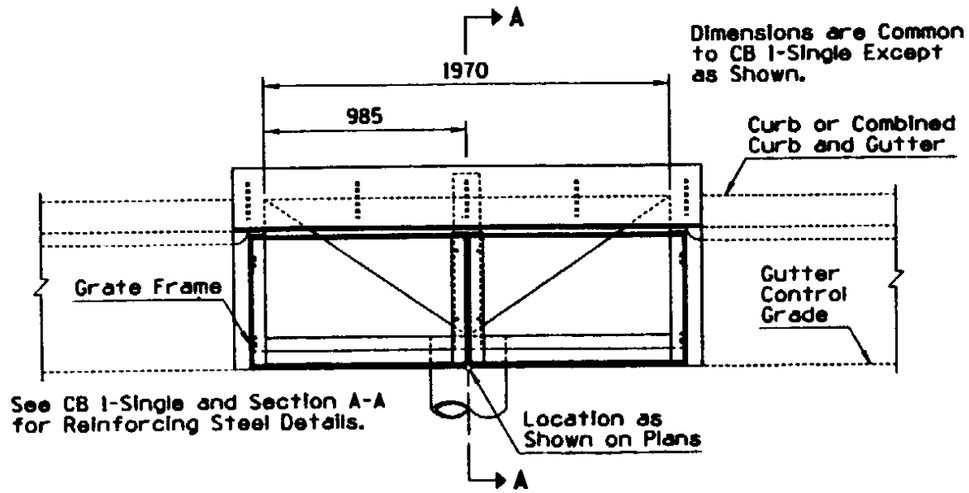

PLAN - CATCH BASIN TYPE 1 - DOUBLE

GENERAL NOTES

(4) 1. Catch basin used at roadway sag only.

2. Pipes can be placed in any wall.

3. Sump Floor shall have a wood trowel finish and a minimum 1:4 slope in all directions to outlet.

4. All structural steel shall be ASTM A 36/A 36M.

5. Welding shall be in accordance with Standard Welding Specifications.

6. Grate, frame, beam and nose angle shall be given one shop coat of No. 1 paint.

7. All concrete shall be Class B.

8. Construction joints and drains shall be placed to meet field conditions. See Std C-15.70.

9. Any specified inlet depression shall be warped to opening according to Std C-15.70.

(4) 10. Silicone sealant shall be placed between the grate frame and PCCP, recessed 6 mm from the pavement surface.

11. Curb opening areas, sq. m, for type 1-single and type 1-double equal 0.023 and 0.049, respectively, for each 25 mm of "h" + inlet depression - 60 mm. See Std C-15.70.

12. See Std C-15.50 for grate and frame details and grate opening areas.

13. ◑t - 150 mm when H is 2.5 m or less.
200 mm when H is greater than 2.5 m.
See Section B-B.

■ = 225 mm when pavement is AC.
Match pavement thickness when pavement is PCCP.

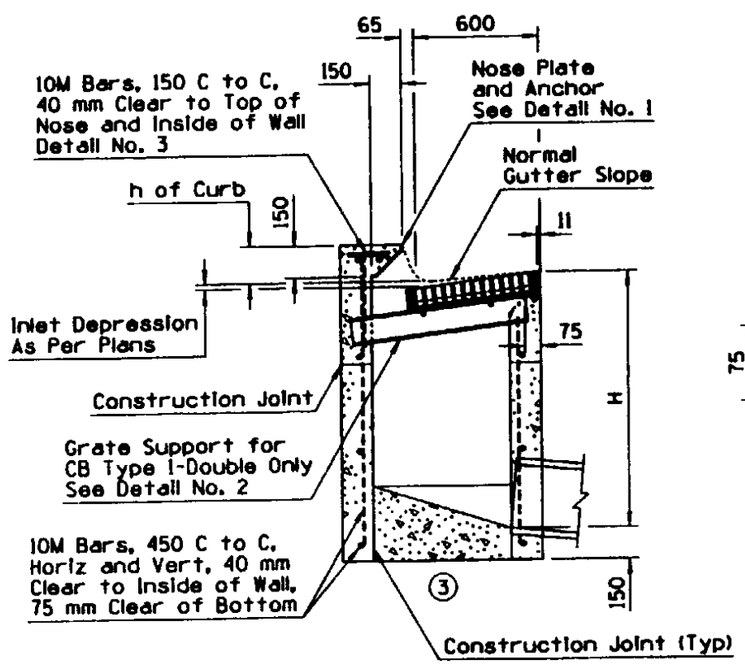

SECTION A-A

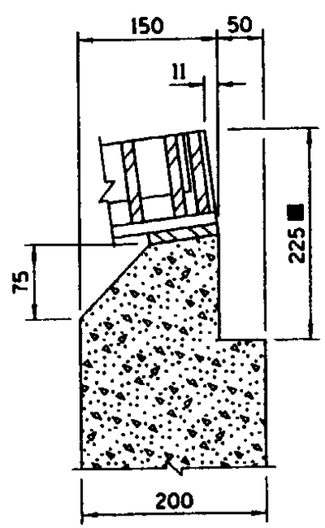

SECTION B-B
USE THIS SECTION WHEN t=200 mm (2)

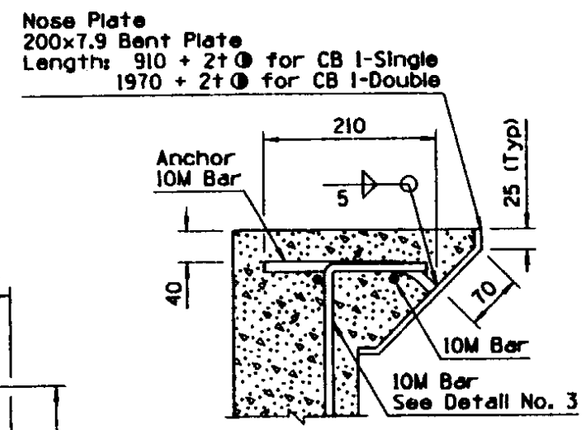

DETAIL NO. 1 (2)

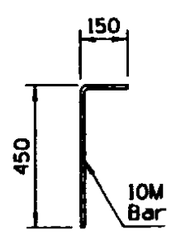

DETAIL NO. 3

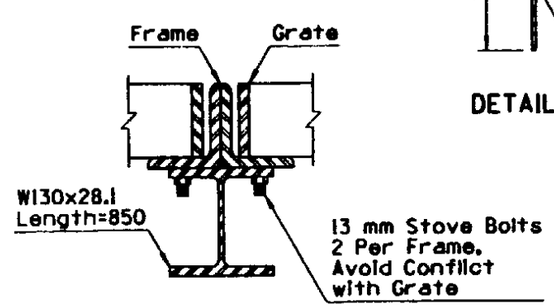

DETAIL NO. 2

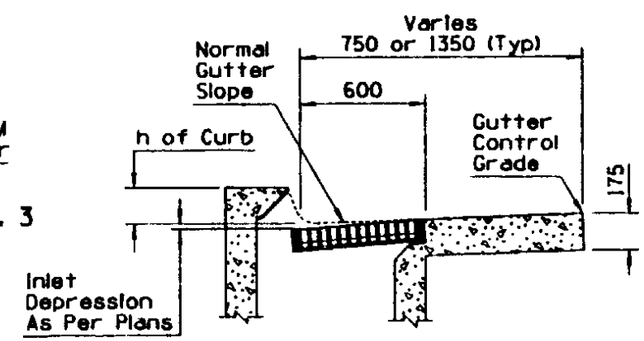

DETAIL NO. 4 (4)

DESIGN APPROVED: Terry H. Otterman	STATE OF ARIZONA DEPARTMENT OF TRANSPORTATION INTERMODAL TRANSPORTATION DIVISION STANDARD DRAWINGS	REV. 5/97
APPROVED FOR DISTRIBUTION: [signature]	(1) CATCH BASIN, TYPE 1	DRAWING NO. C-15.10

Metric

NO	DESCRIPTION OF REVISIONS	MADE BY	DATE
1	REVISED STD FOR NEW ACCESS FRAME AND COVER	PNB	5/97
2	ADDED SHEETS FOR REVISED DETAILS	PNB	5/97
3	REVISED SECTION	PNB	5/97
4	REVISED LENGTHS OF WINGS	PNB	5/97
5	ADDED SECTION	PNB	5/97
6	CONSOLIDATED NOTES	PNB	5/97
7	ADDED NOTE	PNB	5/97
8			

Metric

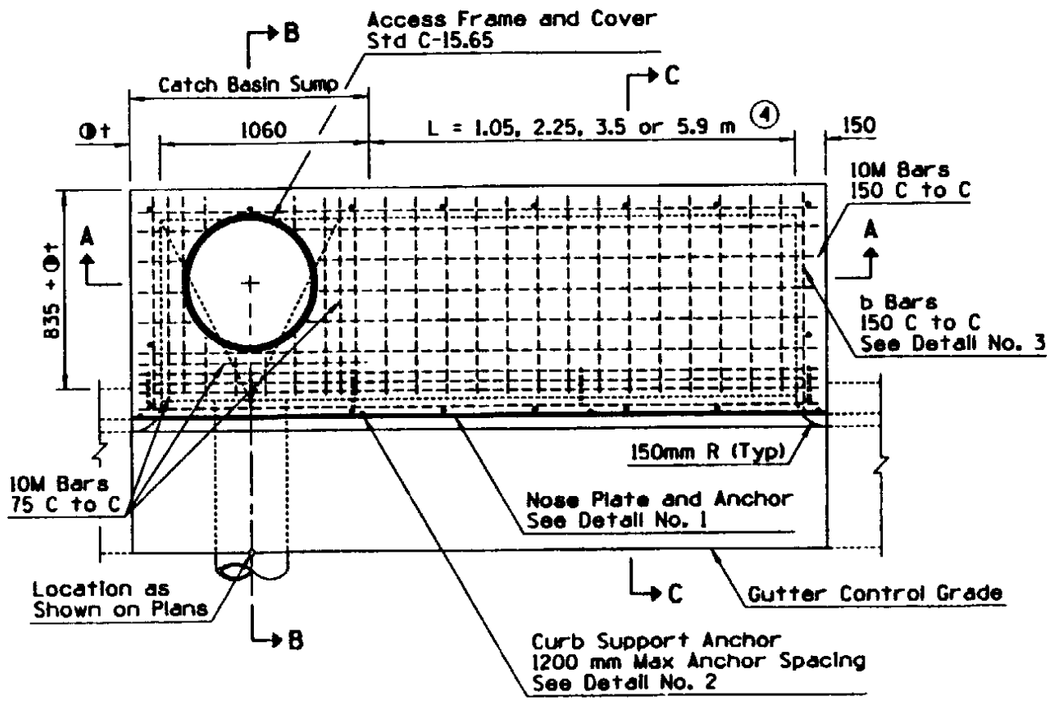

PLAN

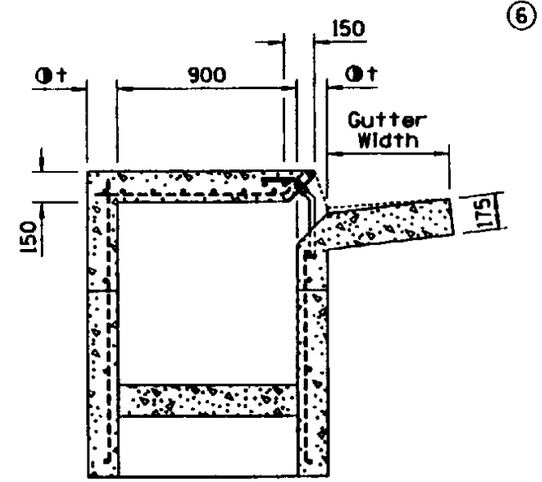

SECTION C-C 5

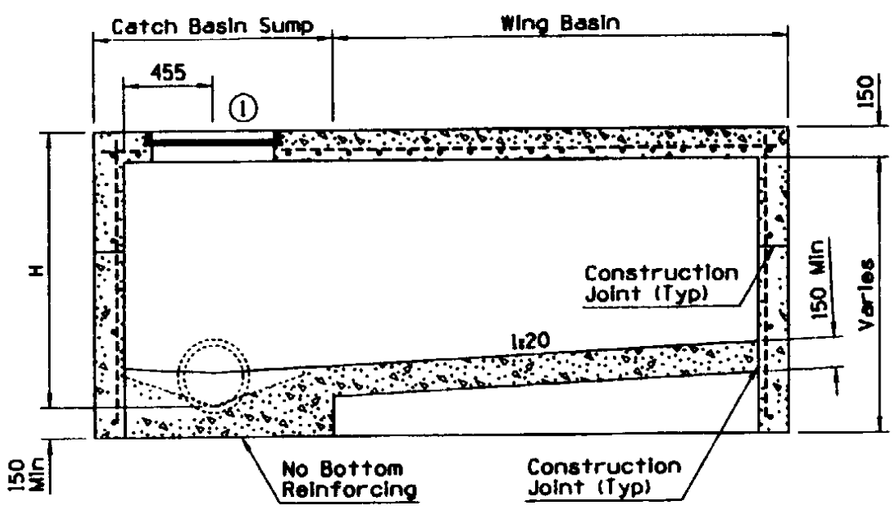

SECTION A-A
USE THIS SECTION WHEN H=1.5m OR LESS 3

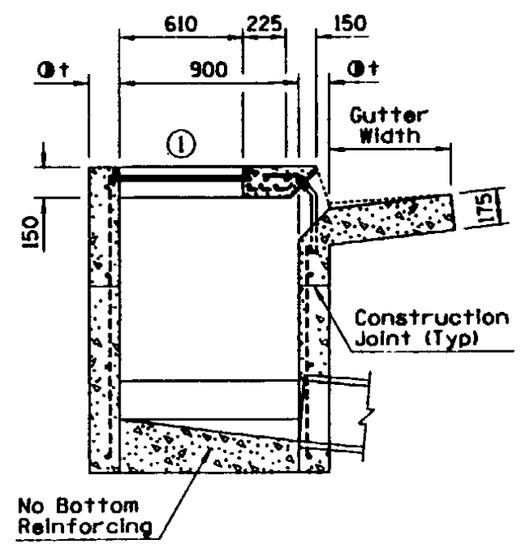

SECTION B-B 3

GENERAL NOTES

7 1. Catch basin can be used on grade or at roadway sag.

6 2. Catch basin has three configurations:
   Sump Only-Sump portion at catch basin (See Detail No. 4).
   Single Wing (Illustrated)-Sump with wing basin upstream.
   Double Wing-Sump with symetrical wing basins each side.

3. Pipes can be placed in any wall except wall adjacent to wing basin.

4. Floor shall have a wood trowel finish. Slope of the sump portion of the catch basin along the axis of the pipe shall be 1:4.

5. Any specified inlet depression shall be warped to opening according to Std C-15.70.

6. All structural steel shall be ASTM A 36/A 36M.

7. Nose plate, access frame and cover shall be given one shop coat of No. 1 paint.

8. All concrete shall be class B.

9. All reinforcing bars shall be 10M, 450 mm C to C both ways and 40 mm clear to inside of walls and outside of wing basin floor except as shown.

10. Curb opening area (m²) per 25 mm of curb "h" + inlet depression = curb opening length (m) x 0.040.

11. Welding shall be in accordance with Standard Welding Specifications.

12. Construction joints and drains shall be placed to meet field conditions. See Std C-15.70.

13. t = 150 mm when H is 2.5 m or less.
    200 mm when H is greater than 2.5 m.

DESIGN APPROVED	STATE OF ARIZONA DEPARTMENT OF TRANSPORTATION INTERMODAL TRANSPORTATION DIVISION STANDARD DRAWINGS	REV. 5/97
APPROVED FOR DISTRIBUTION	1 2 CATCH BASIN, TYPE 3	DRAWING NO. C-15.20 Sheet 1 of 2

Metric

NO	DESCRIPTION OF REVISIONS	MADE BY	DATE
1			
2			
3			
4			

Metric

GENERAL NOTES

1. See sheet 1 of 2 for other dimensions, notes and reinforcing steel.
2. ◑t = 150 mm when H is 2.5 m or less.
   200 mm when H is greater than 2.5 m.

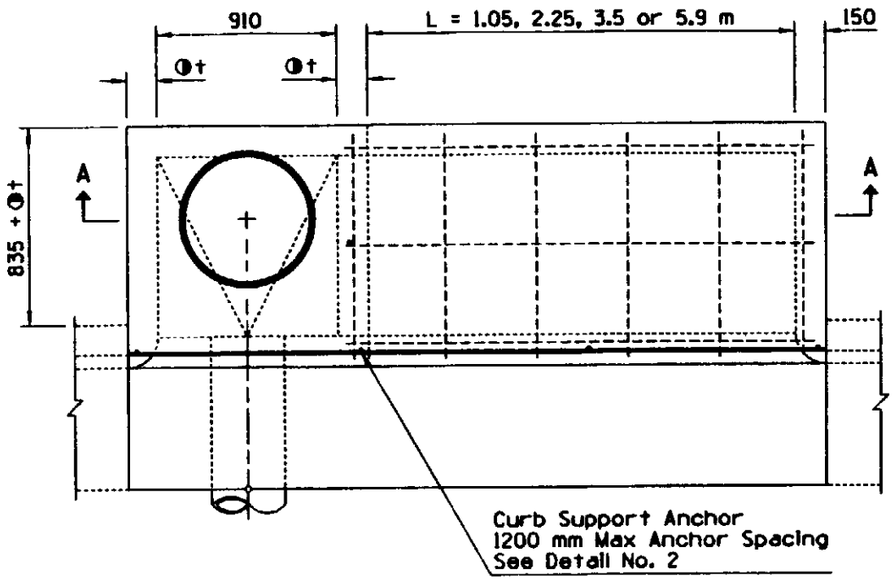

PLAN

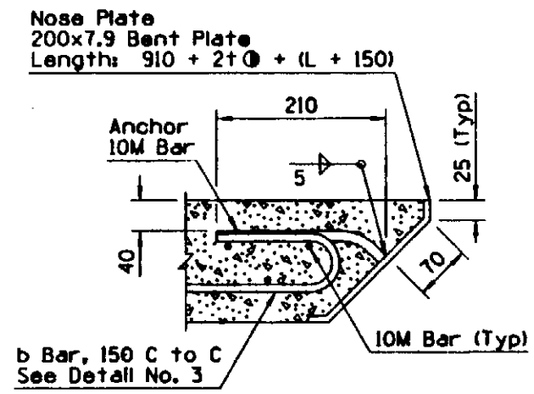

DETAIL NO. 1

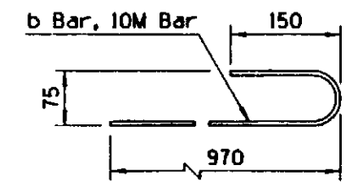

DETAIL NO. 3

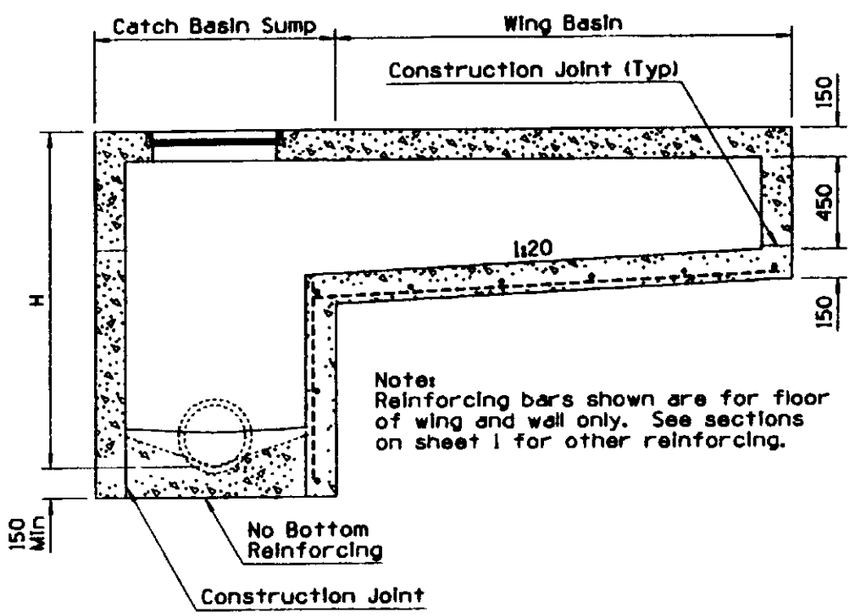

SECTION A-A
USE THIS SECTION WHEN H IS GREATER THAN 1.5m

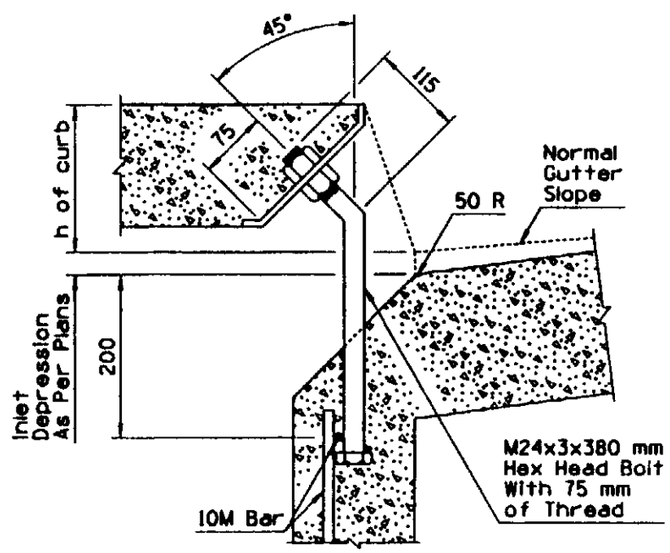

DETAIL NO. 2
CURB SUPPORT ANCHOR

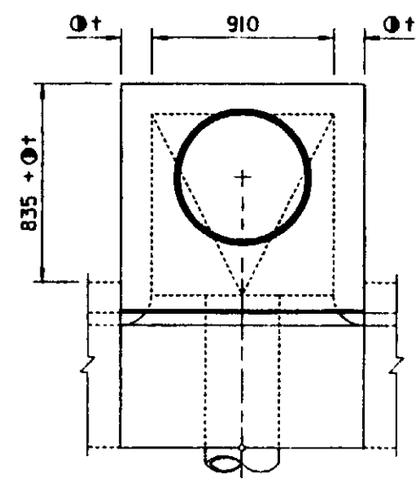

DETAIL NO. 4

DESIGN APPROVED	STATE OF ARIZONA DEPARTMENT OF TRANSPORTATION INTERMODAL TRANSPORTATION DIVISION STANDARD DRAWINGS	ISSUE 5/97
APPROVED FOR REPRODUCTION	CATCH BASIN, TYPE 3	DRAWING NO. C-15.20 Sheet 2 of 2

Metric

NO	DESCRIPTION OF REVISIONS	MADE BY	DATE
1	REVISED STD FOR NEW FRAME	PNB	5/97
2	REVISED DETAIL	PNB	5/97
3	REVISED FLOOR FOR POURING AFTER WALLS	PNB	5/97
4	ADDED SECTION OR DETAIL	PNB	5/97

NO	DESCRIPTION OF REVISIONS	MADE BY	DATE
5	REVISED NOTE	PNB	5/97
6	ADDED NOTE	PNB	5/97
7			
8			

Metric

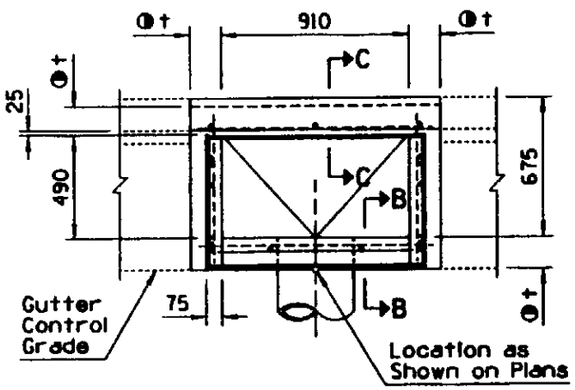

PLAN - CATCH BASIN TYPE 4 - SINGLE

See CB 4-Single and Section A-A for Reinforcing Steel Details.

Dimensions are Common to CB 4-Single Except as Shown.

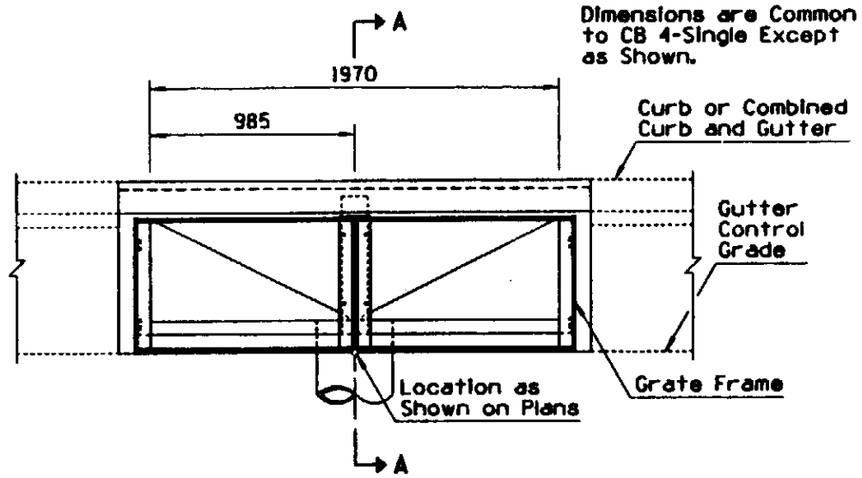

PLAN - CATCH BASIN TYPE 4 - DOUBLE

GENERAL NOTES

(6) 1. Catch basin can be used on grade or at roadway sag. For on-roadway use only.

2. Pipes can be placed in any wall.

(5) 3. Floor shall have a wood trowel finish and a minimum 1:4 slope along the axis of the pipe toward the pipe.

4. Curb over catch basin shall not be constructed until catch basin concrete has set for a minimum of 24 hours.

(6) 5. Catch basin can be used with curb and gutter (as shown) or without.

6. See Stds C-15.50 for grate and frame details and opening areas.

7. Any specified inlet depression shall be warped to opening according to Std C-15.70.

8. All structural steel shall be ASTM A 36/A 36M.

9. Grate, frame and beam shall be given one shop coat of No. 1 paint.

10. All concrete shall be Class B.

11. Construction joints and drains shall be placed to meet field conditions. See Std C-15.70.

(6) 12. Silicone sealant shall be placed between the grate frame and PCCP, recessed 6 mm from the pavement surface.

(6) 13. See Detail No. 2 for catch basin with wide gutter.

14. ◑t - 150 mm when H is 2.5 m or less.
200 mm when H is greater than 2.5 m.
See Section B-B.

■ = 225 mm when pavement is AC.
Match pavement thickness when pavement is PCCP.

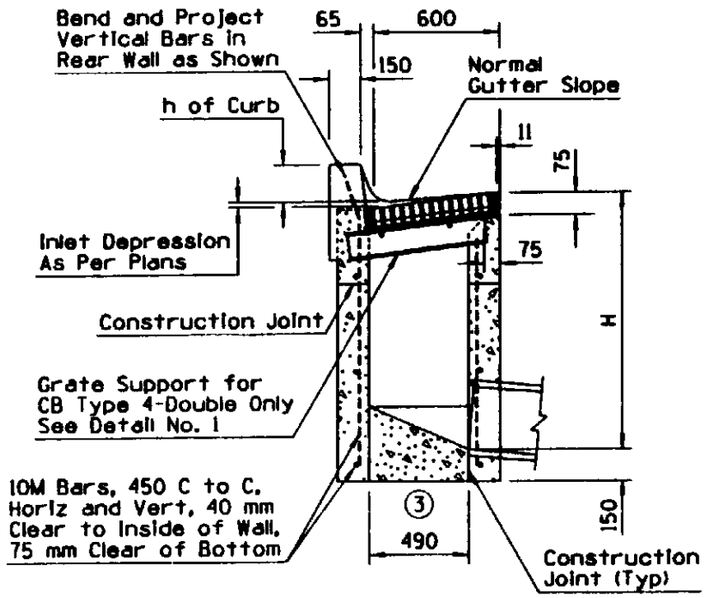

SECTION A-A

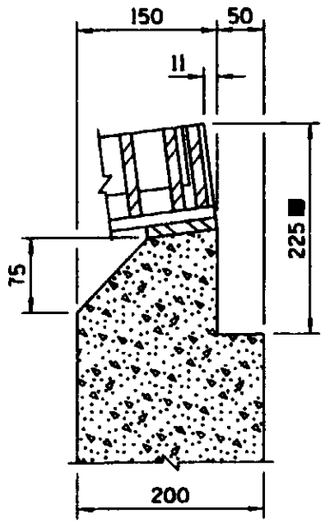

SECTION B-B
USE THIS SECTION WHEN t=200 mm (2)

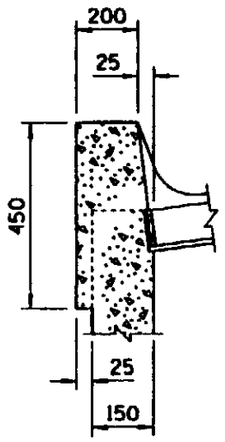

SECTION C-C (4)

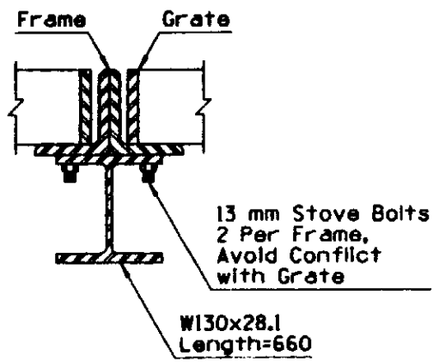

DETAIL NO. 1

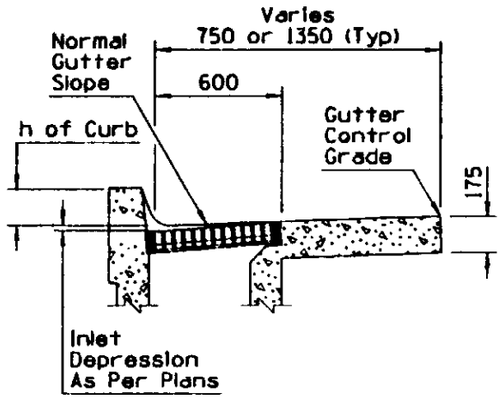

DETAIL NO. 2 (4)

DESIGN APPROVED	STATE OF ARIZONA DEPARTMENT OF TRANSPORTATION INTERMODAL TRANSPORTATION DIVISION STANDARD DRAWINGS	REV. 5/97
APPROVED FOR DISTRIBUTION	(1) CATCH BASIN, TYPE 4	DRAWING NO. C-15.30

Metric

NO	DESCRIPTION OF REVISIONS	MADE BY	DATE
1	MODIFIED STD FOR NEW FRAME AND NOSE PLATE	PNB	5/97
2	ADDED SHEET 2 FOR REVISED DETAILS	PNB	5/97
3	REVISED SECTION	PNB	5/97
4	REVISED LENGTHS OF WINGS	PNB	5/97
5	ADDED SECTION	PNB	5/97
6	REVISED NOTE	PNB	5/97
7	CONSOLIDATED NOTES	PNB	5/97
8	ADDED NOTE	PNB	5/97

Metric

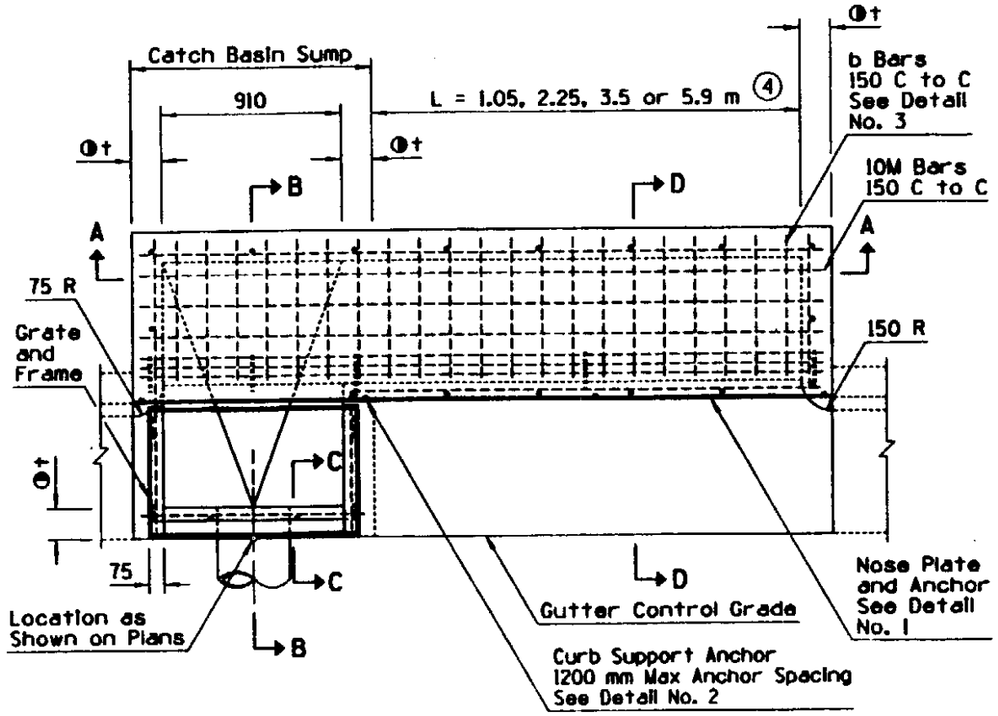

PLAN

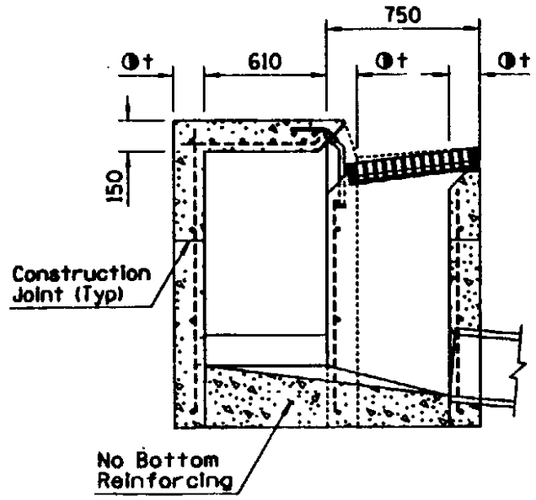

SECTION B-B ③

GENERAL NOTES

⑧ 1. Catch basin can be used on grade or at roadway sag.

⑦ 2. Catch basin has three configurations:
Sump Only-Sump portion of catch basin.
Single Wing (Illustrated)-Sump with wing basin upstream.
Double Wing-Sump with symetrical wing basins each side.

3. Pipes can be placed in any wall except wall adjacent to a wing basin.

⑥ 4. Floor shall have a wood trowel finish. Slope of the sump portion of the catch basin along the axis of the pipe shall be 1:4.

5. Any specified inlet depression shall be warped to opening according to Std C-15.70.

6. All structural steel shall be ASTM A 36/A 36M.

7. Nose plate shall be given one shop coat of No. 1 paint.

8. All concrete shall be class B.

9. All reinforcing bars shall be 10M, 450 mm C to C both ways and 40 mm clear to inside of walls and outside of wing basin floor except as shown.

10. Curb opening area (m²) per 25 mm of curb "h" + inlet depression = curb opening length (m) x 0.040.

11. Welding shall be in accordance with Standard Welding Specifications.

12. See Std C-15.50 for grate and frame details and opening areas.

13. Construction joints and drains shall be placed to meet field conditions. See Std C-15.70.

⑥ 14. Silicone sealant shall be placed between the grate frame and PCCP, recessed 6 mm from the pavement surface.

15. ◑t - 150 mm when H is 2.5 m or less.
200 mm when H is greater than 2.5 m.
See Section B-B.

16. ■ = 225 mm when pavement is AC.
Match pavement thickness when pavement is PCCP.

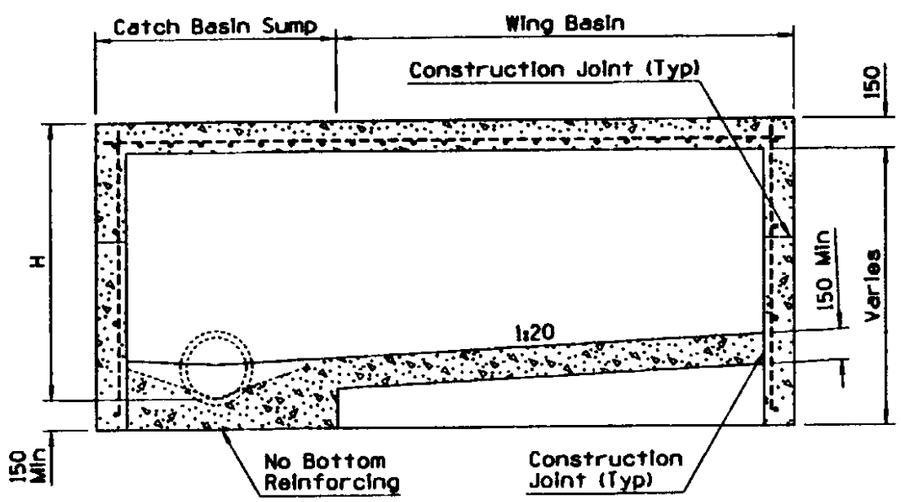

SECTION A-A
USE THIS SECTION WHEN H=1.5m OR LESS ③

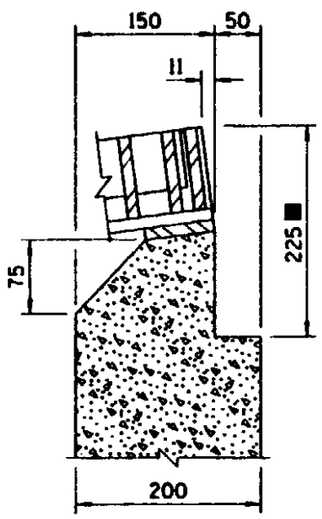

SECTION C-C
USE THIS SECTION
WHEN t=200 mm ③

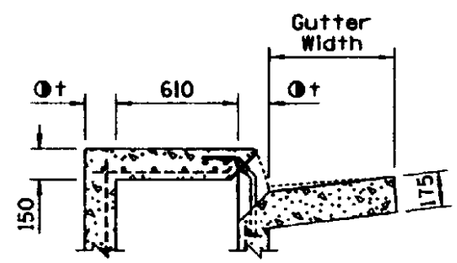

SECTION D-D ⑤

DESIGN APPROVED	STATE OF ARIZONA DEPARTMENT OF TRANSPORTATION INTERMODAL TRANSPORTATION DIVISION STANDARD DRAWINGS	REV. 5/97
APPROVED FOR DISTRIBUTION	① ② CATCH BASIN, TYPE 5	DRAWING NO. C-15.40 Sheet 1 of 2

Metric

NO	DESCRIPTION OF REVISIONS	MADE BY	DATE
1			
2			
3			
4			

Metric

GENERAL NOTES

1. See sheet 1 of 2 for other dimensions, notes and reinforcing steel.
2. ◑t = 150 mm when H is 2.5 m or less.
   200 mm when H is greater than 2.5 m.

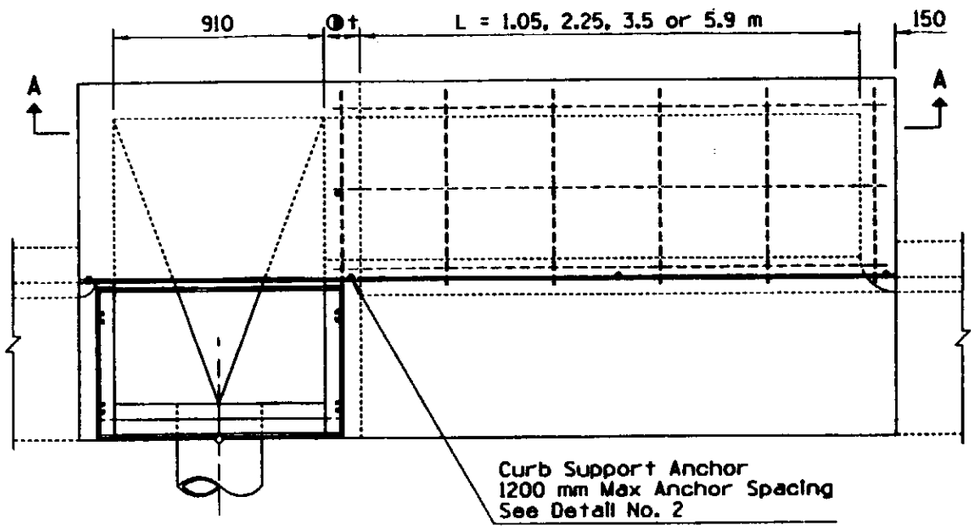

PLAN

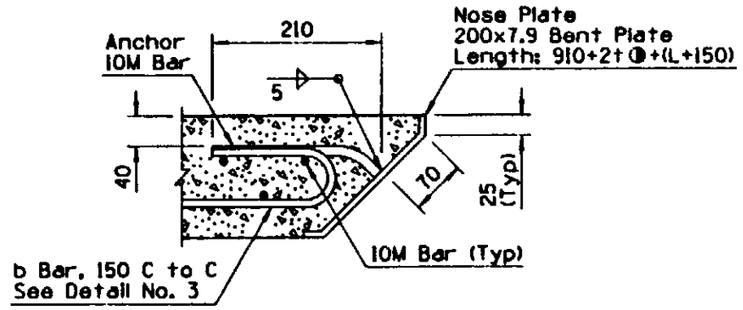

DETAIL NO. 1

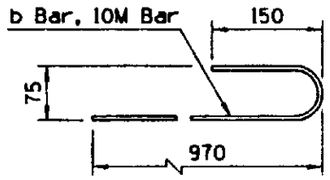

DETAIL NO. 3

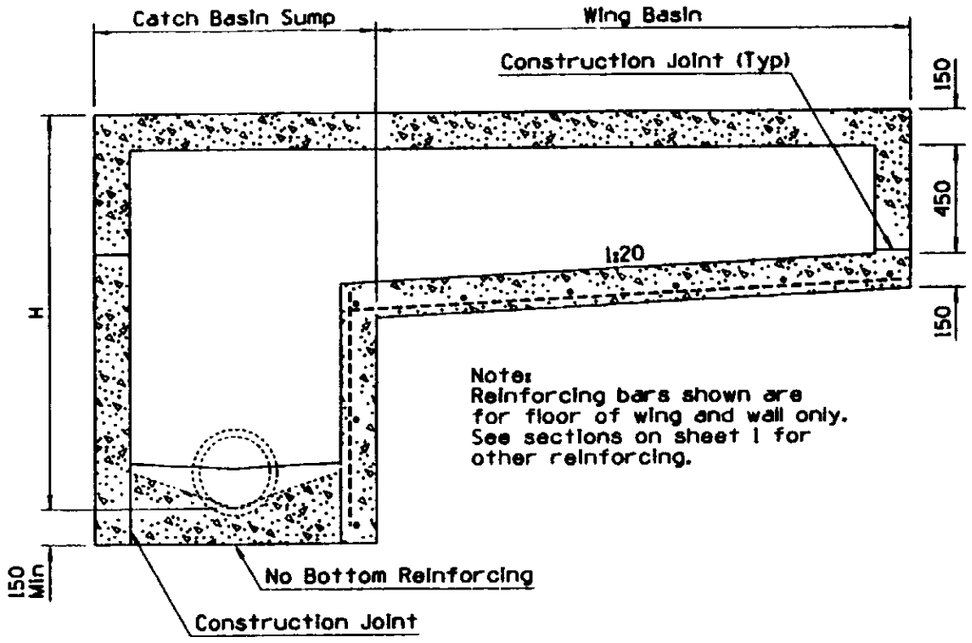

SECTION A-A
USE THIS SECTION WHEN H IS GREATER THAN 1.5 m

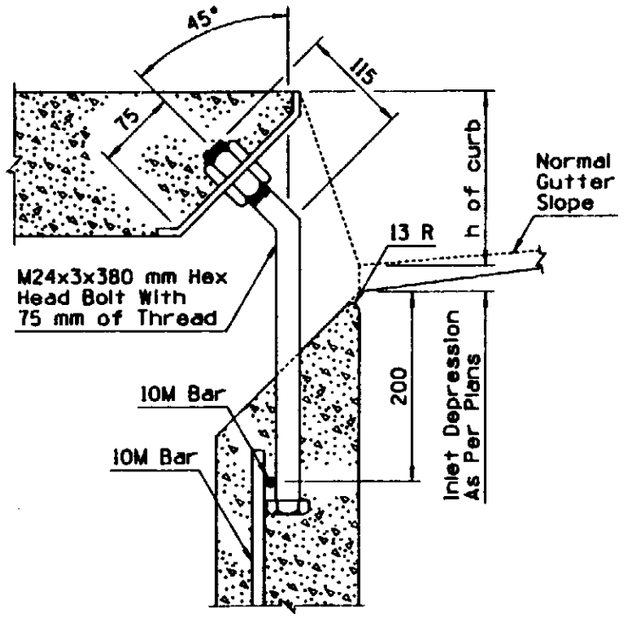

DETAIL NO. 2
CURB SUPPORT ANCHOR

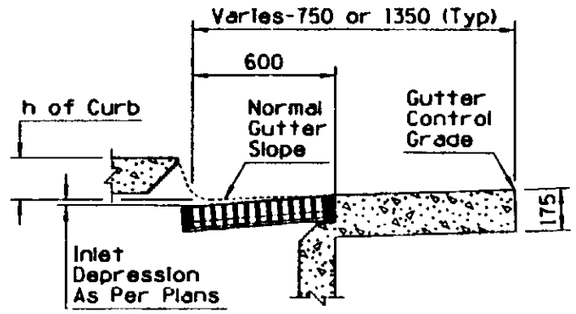

DETAIL NO. 4

DESIGN APPROVED: Terry H. Otterness	STATE OF ARIZONA DEPARTMENT OF TRANSPORTATION INTERMODAL TRANSPORTATION DIVISION STANDARD DRAWINGS	ISSUE 5/97
APPROVED FOR DISTRIBUTION: Ronald W. Eliason	CATCH BASIN, TYPE 5	DRAWING NO. C-15.40 Sheet 2 of 2

Metric

NO	DESCRIPTION OF REVISIONS	MADE BY	DATE
1	DELETED ALL GRATES EXCEPT WIDE EF-1	PNB	5/97
2	DELETED NARROW FRAME	PNB	5/97
3	DELETED THREE GENERAL NOTES	PNB	5/97
4	ADDED GENERAL NOTE	PNB	5/97

Metric

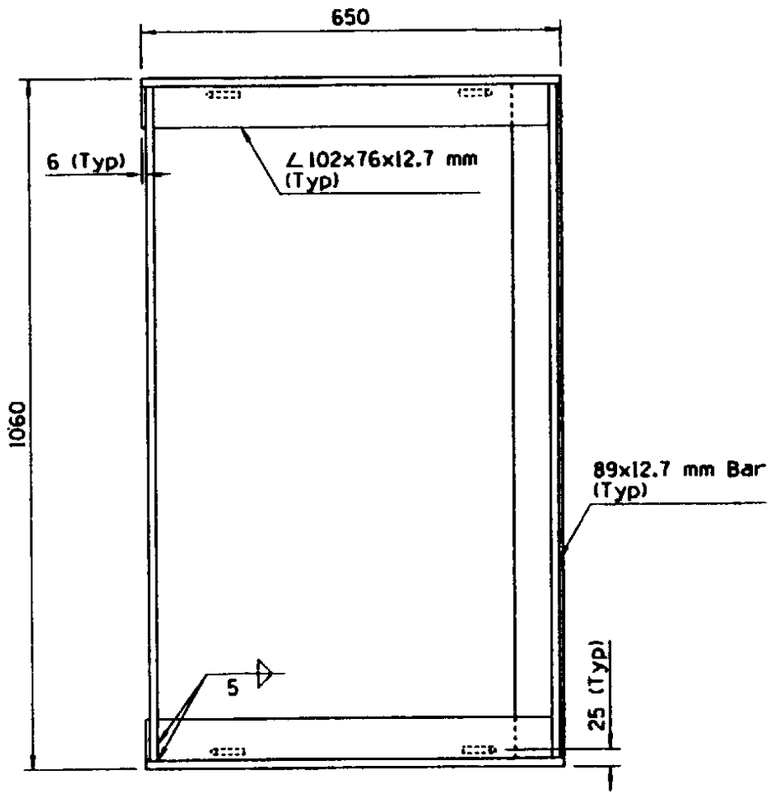

PLAN

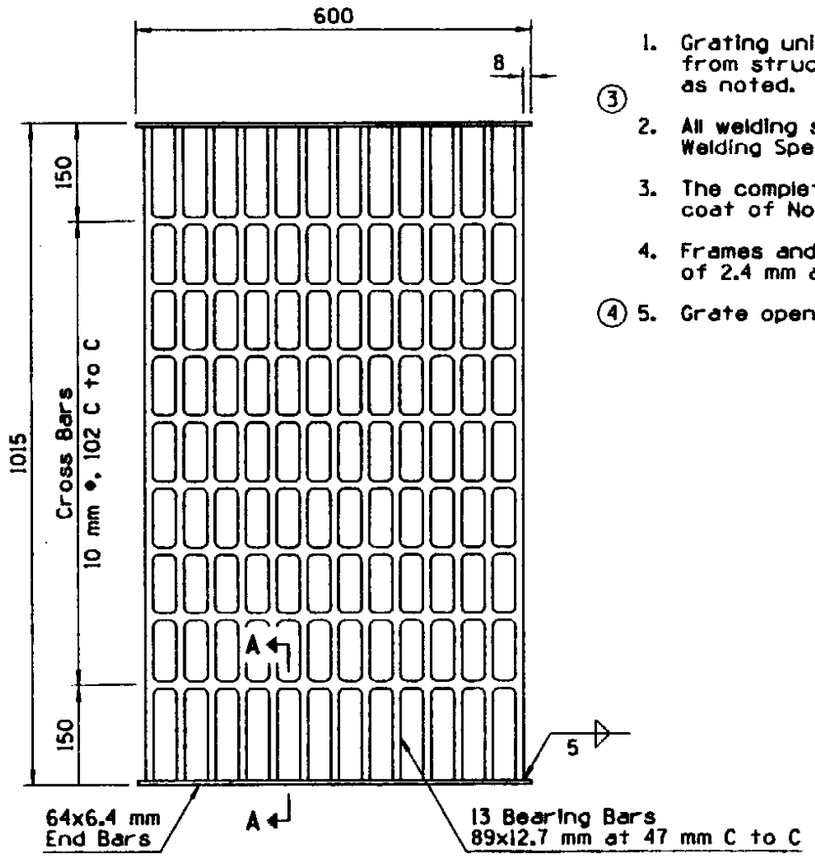

PLAN

GENERAL NOTES

1. Grating units and frames shall be fabricated from structural steel ASTM A 36/A 36M except as noted. (3)
2. All welding shall be in accordance with Standard Welding Specifications.
3. The completed assembly shall be given one shop coat of No. 1 paint.
4. Frames and grates shall fit to a maximum rock of 2.4 mm at any point.
5. (4) Grate opening is 0.369 Sq m.

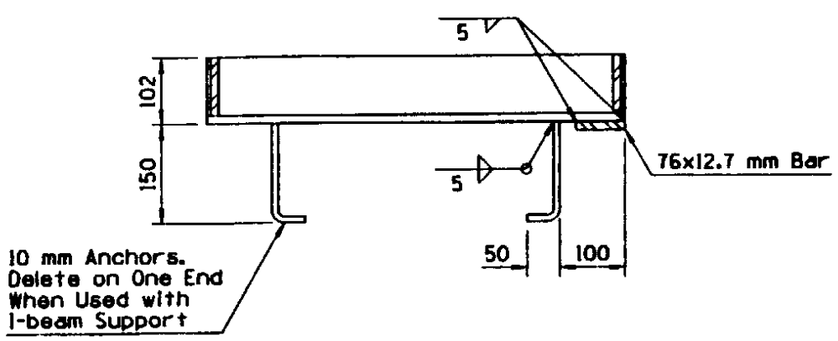

SECTION

FRAME (2)

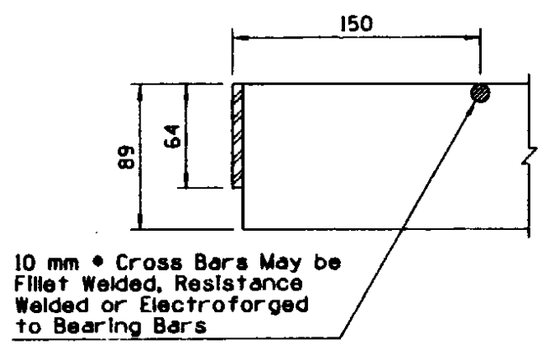

SECTION A-A

GRATE (1)

DESIGN APPROVED	STATE OF ARIZONA DEPARTMENT OF TRANSPORTATION INTERMODAL TRANSPORTATION DIVISION STANDARD DRAWINGS	REV. 5/97
APPROVED FOR DISTRIBUTION	CATCH BASIN, GRATES	DRAWING NO. C-15.50

Metric

NO	DESCRIPTION OF REVISIONS	MADE BY	DATE
1			
2			
3			
4			

GENERAL NOTES

1. Cover shall be non-locking.
2. Frame and cover shall be cast iron or structural steel.
3. Catch basin access frame and cover is for use in sidewalk area only.
4. Cover shall be filled with concrete and broom finished.

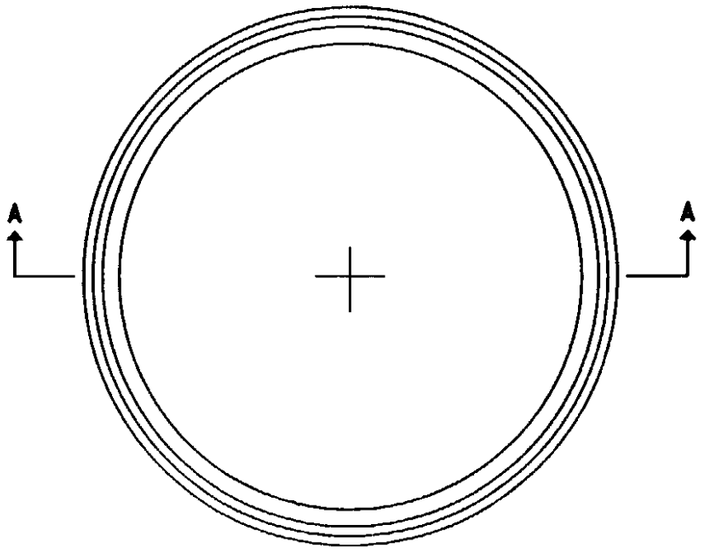

PLAN

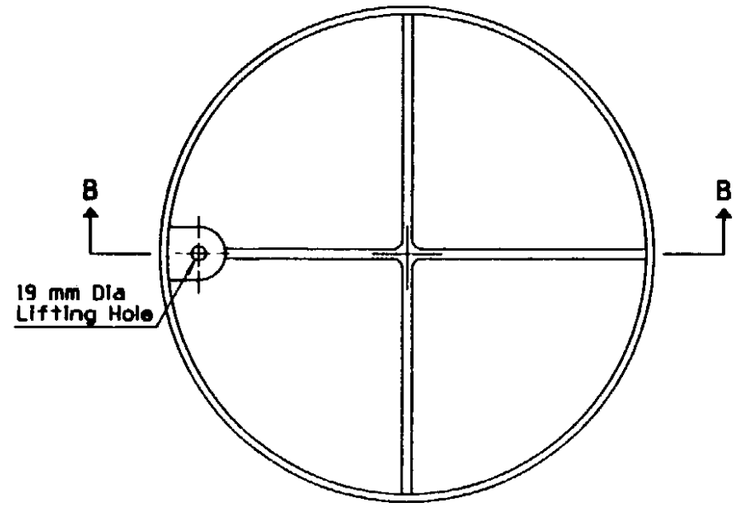

PLAN

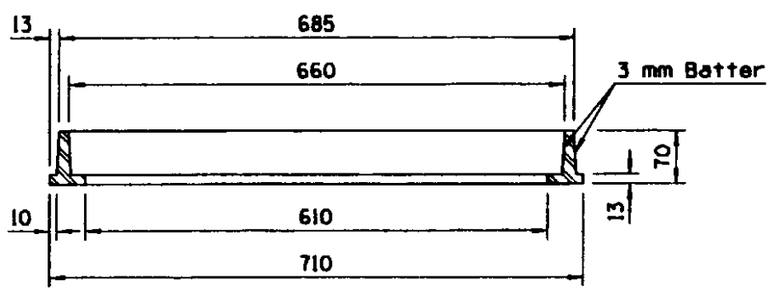

SECTION A-A

FRAME

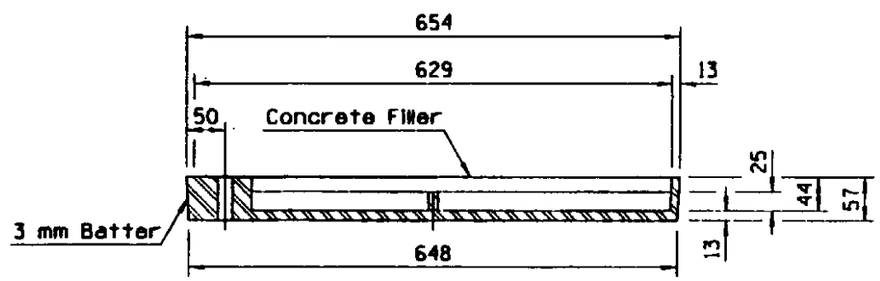

SECTION B-B

COVER

DESIGN APPROVED	STATE OF ARIZONA DEPARTMENT OF TRANSPORTATION INTERMODAL TRANSPORTATION DIVISION STANDARD DRAWINGS	ISSUE 5/97
APPROVED FOR DISTRIBUTION	CATCH BASIN ACCESS FRAME AND COVER DETAILS	DRAWING NO. C-15.65

NO	DESCRIPTION OF REVISIONS	MADE BY	DATE
1	REVISED STD FOR NEW FRAME	PNB	5/97
2	ADDED DETAIL TO SHOW WIDE GUTTER	PNB	5/97
3	REVISED NOTE	PNB	5/97
4			

Metric

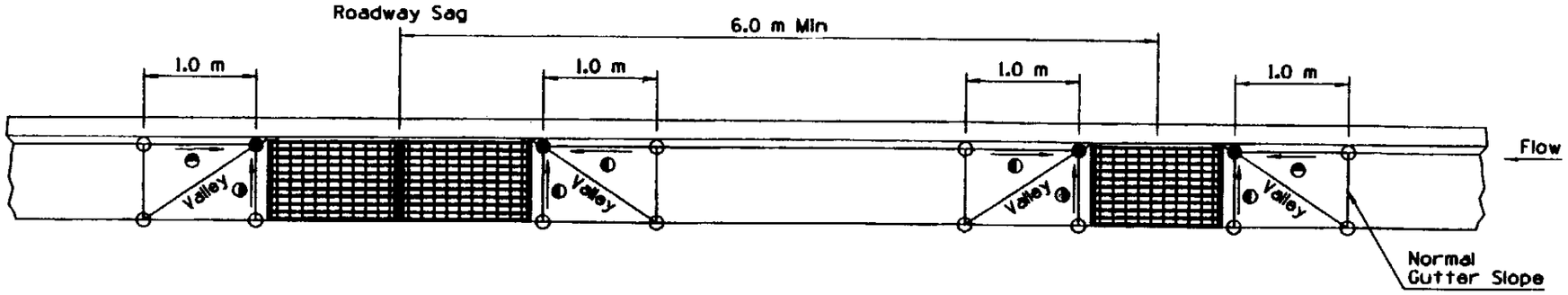

CATCH BASIN SPACING AT ROADWAY SAG CONDITION

GENERAL NOTES

1. No inlet depression shall extend into a traffic lane.
2. Maximum combined gutter and inlet depression is 75 mm. See Detail No. 1.
3. Maximum distance along curb between catch basins where full gutter depression is used is 3.0 m.
4. See Std. C-15.80 for aprons used with C-15.80 Catch Basin.
5. See Detail No. 2 for grate type catch basins with wide gutter.

LEGEND

- ○ - Normal pavement or gutter flow line elevation.
- ● - Depressed elevation.
- ⊖ - Straight grade with downward slope.
- W - Normal gutter width per Std. C-05.10.
- ▲ - Types 1, 3, & 5.
- ◆ - Type 4 & C-15.91.

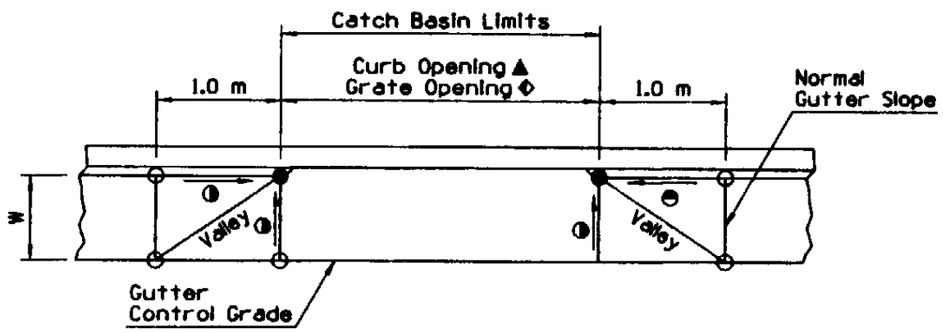

INLET DEPRESSION

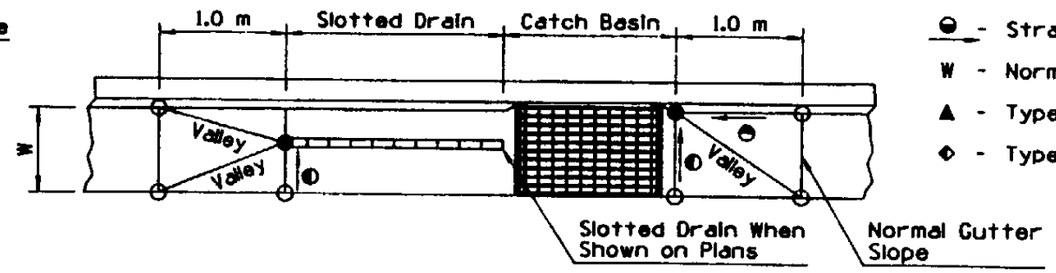

INLET DEPRESSION
CATCH BASIN WITH SLOTTED DRAIN

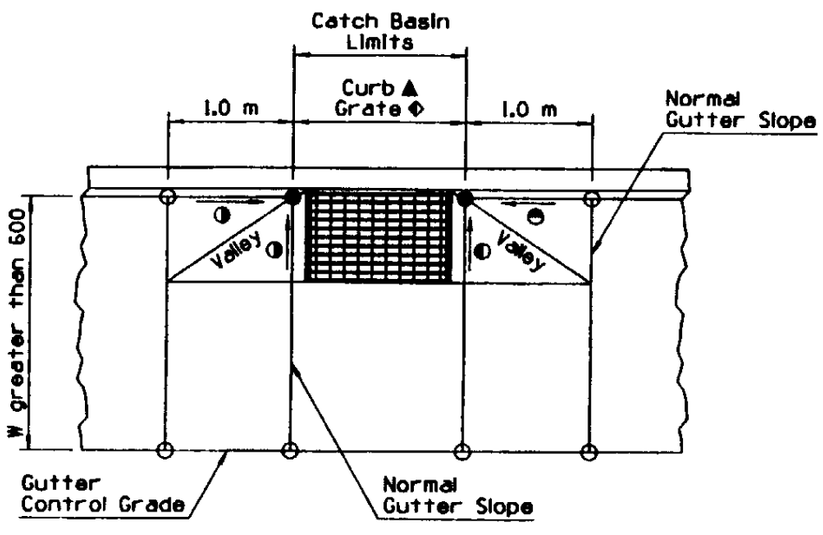

INLET DEPRESSION
CATCH BASIN WITH WIDE GUTTER ②

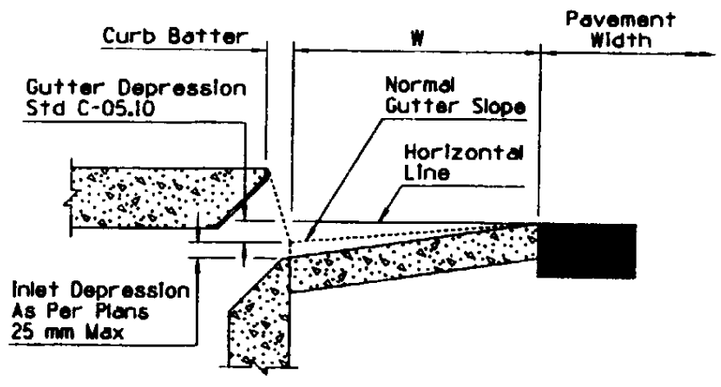

DETAIL NO. 1

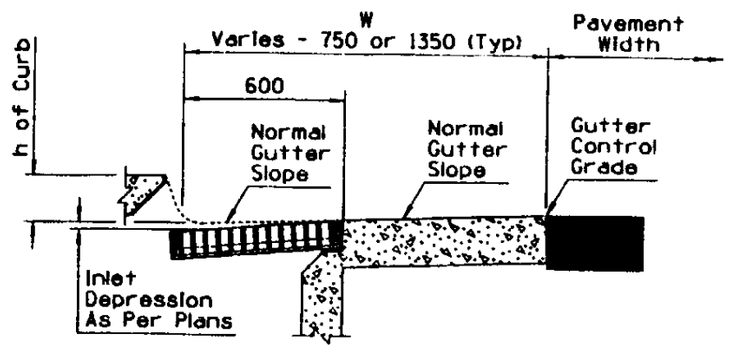

DETAIL NO. 2 ②

DESIGN APPROVED APPROVED FOR DISTRIBUTION	STATE OF ARIZONA DEPARTMENT OF TRANSPORTATION INTERMODAL TRANSPORTATION DIVISION STANDARD DRAWINGS	REV. 5/97
	① CATCH BASIN MISC. DETAILS	DRAWING NO. C-15.70 Sheet 1 of 2

Metric

NO	DESCRIPTION OF REVISIONS	MADE BY	DATE
1			
2			
3			
4			

Metric

GENERAL NOTES

1. Construction drain may be deleted at the option of the Engineer.

LEGEND

O - Normal pavement or gutter flow line elevation.

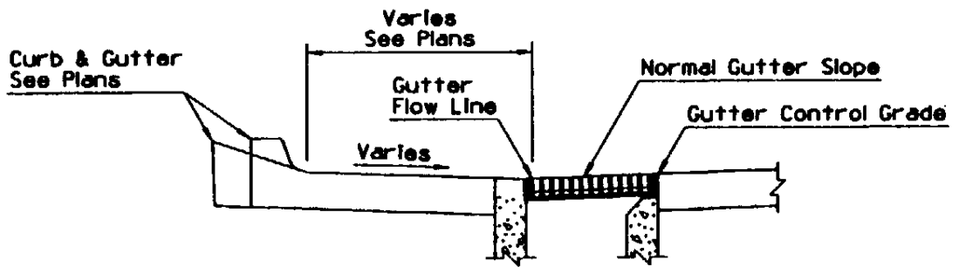

SECTION

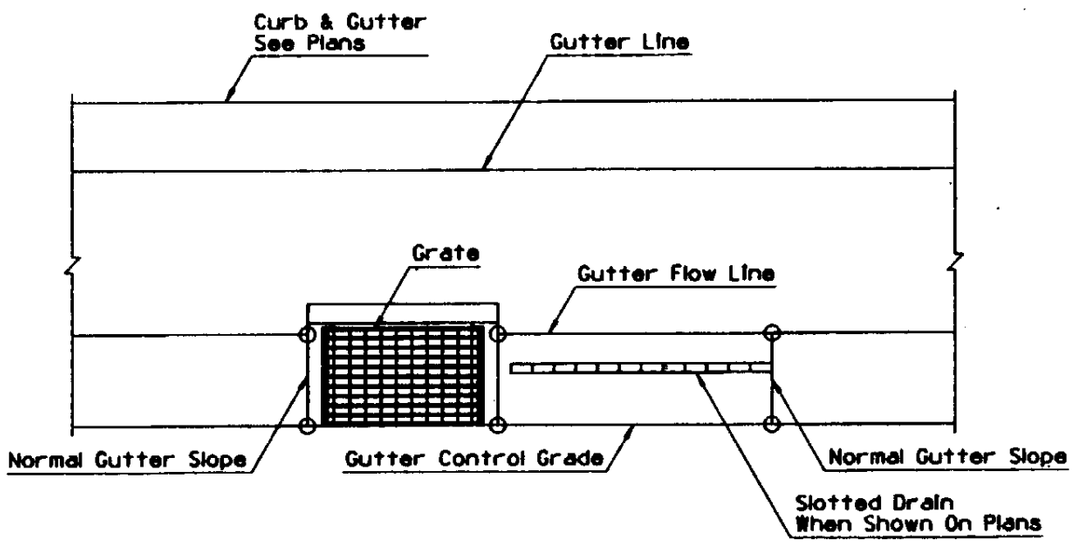

TYPE 4 CATCH BASIN WITHOUT CURB

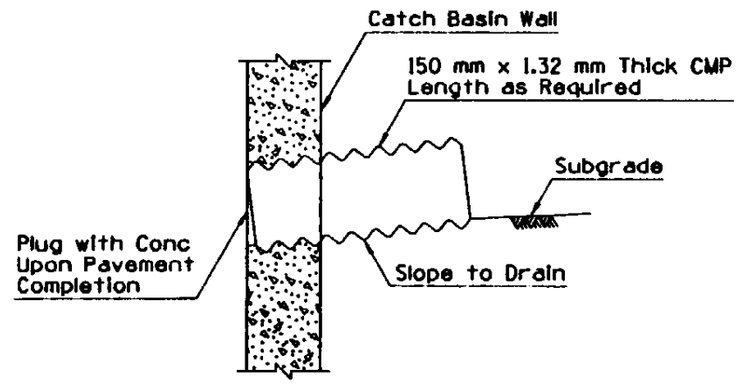

CATCH BASIN CONSTRUCTION DRAIN

DESIGN APPROVED APPROVED FOR DISTRIBUTION	STATE OF ARIZONA DEPARTMENT OF TRANSPORTATION INTERMODAL TRANSPORTATION DIVISION STANDARD DRAWINGS	ISSUE 5/97
	1 CATCH BASIN MISC. DETAILS	DRAWING NO. C-15.70 Sheet 2 of 2

Metric

NO	DESCRIPTION OF REVISIONS	MADE BY	DATE
1	CHANGED APRON TO PORTLAND CEMENT CONCRETE ONLY	PNB	5/97
2	REVISED SLOPE	PNB	5/97
3			
4			

Metric

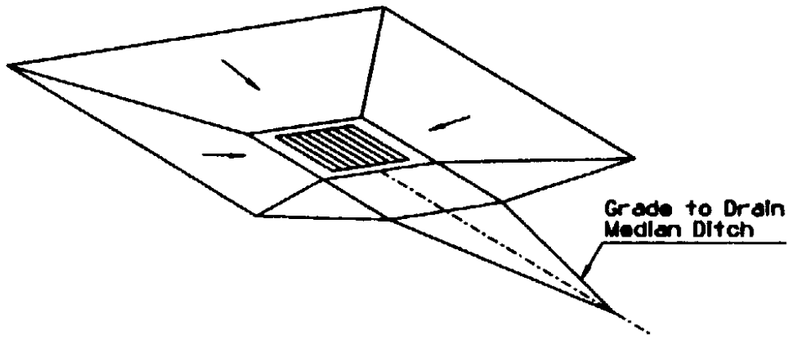

PERSPECTIVE

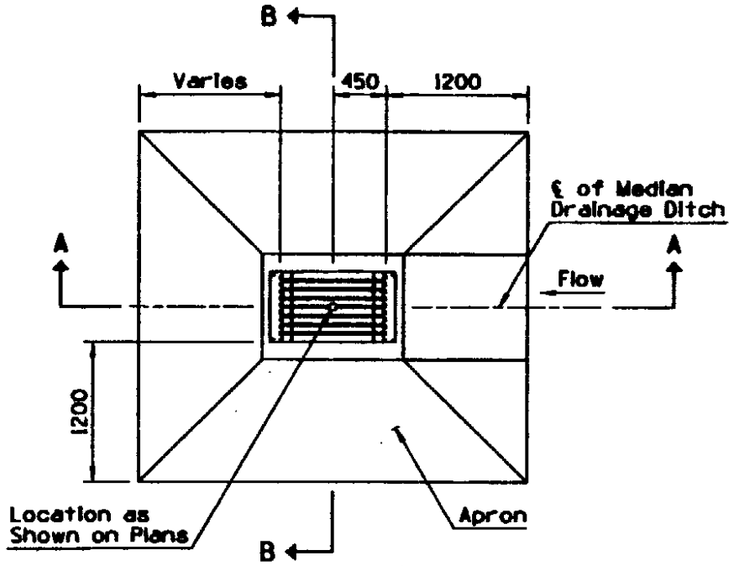

PLAN

GENERAL NOTES

1. Apron shall be portland cement concrete.
2. All concrete shall be Class B.
3. Grating shall be fabricated of structural steel.
4. Structural steel shall be in accordance with ASTM A 36/A 36M.
5. Welding shall be in accordance with Standard Welding Specifications.
6. Grating assembly shall be given one shop coat of No. 1 paint.
7. 'H' indicated on plans.

* - 200 mm When Wall Height Exceeds 2.5 m.

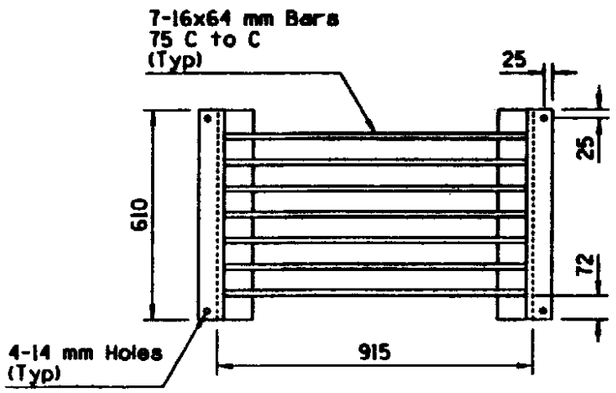

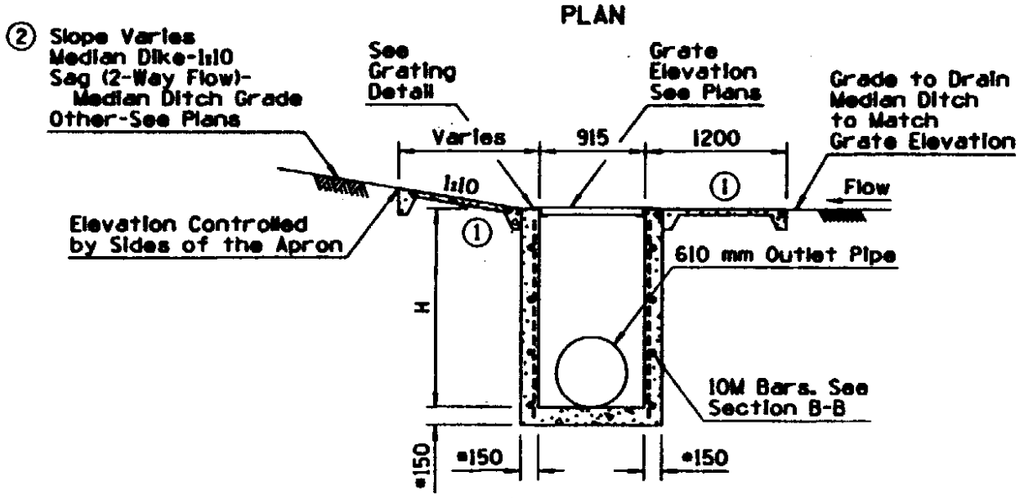

SECTION A-A

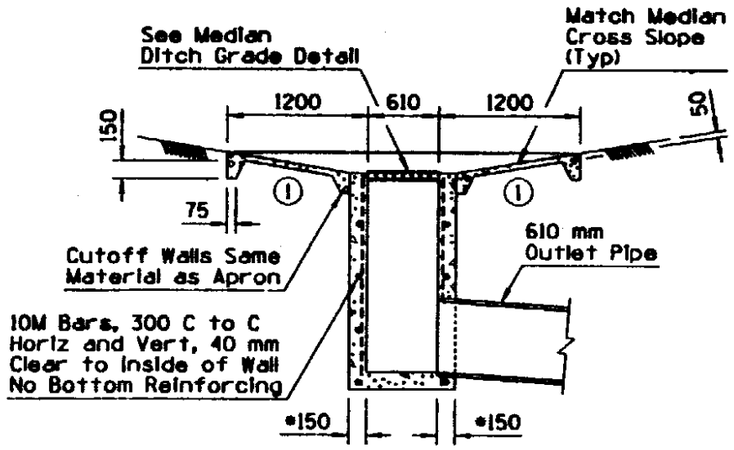

SECTION B-B

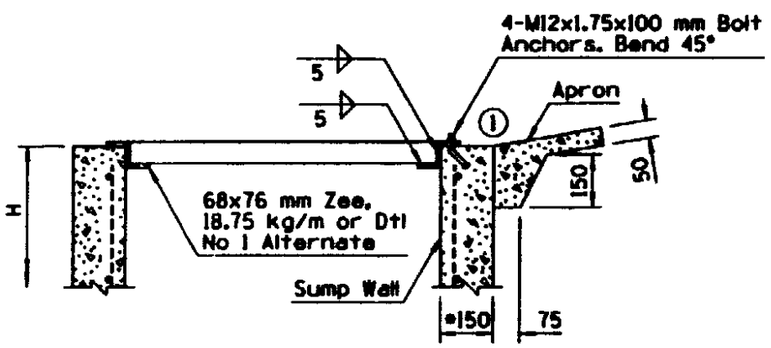

GRATING DETAIL

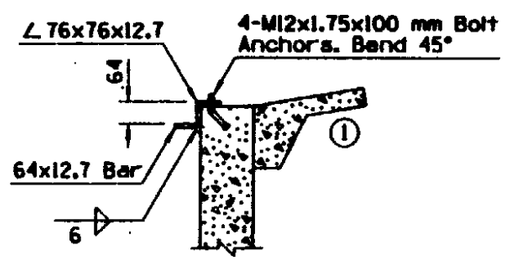

DETAIL NO. 1

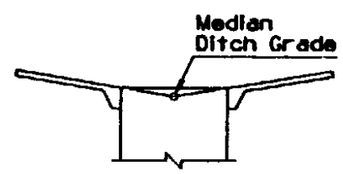

MEDIAN DITCH GRADE DETAIL

	STATE OF ARIZONA DEPARTMENT OF TRANSPORTATION INTERMODAL TRANSPORTATION DIVISION STANDARD DRAWINGS	REV. 5/97
	CATCH BASIN, MEDIAN FLUSH	DRAWING NO. C-15.80

Metric

NO	DESCRIPTION OF REVISIONS	MADE BY	DATE
1	CHANGED APRON TO PORTLAND CEMENT CONCRETE ONLY	PNB	5/97
2	REVISED SLOPE	PNB	5/97
3			
4			

Metric

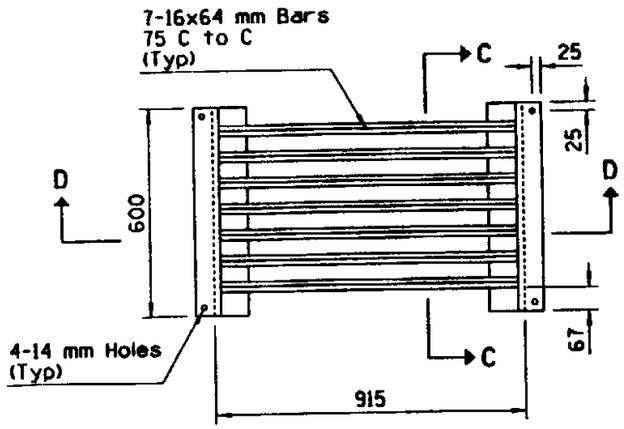

GRATING DETAIL

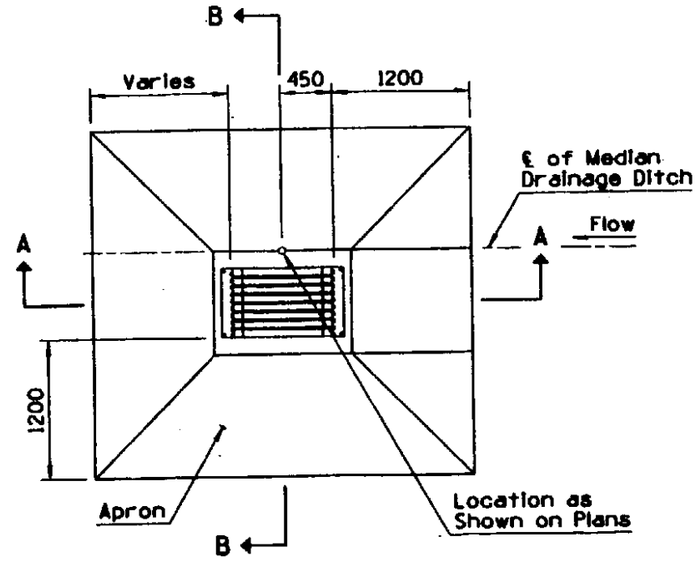

PLAN

GENERAL NOTES

(1) 1. Apron shall be portland cement concrete, Class B.

2. All concrete shall be Class B.

3. Grating shall be fabricated of structural steel.

4. Structural steel shall be in accordance with ASTM A 36/A 36M.

5. Welding shall be in accordance with Standard Welding Specifications.

6. Grating assembly shall be given one shop coat of No. 1 paint.

7. 'H' indicated on plans.

* 200 mm When Wall Height Exceeds 2.5 m.

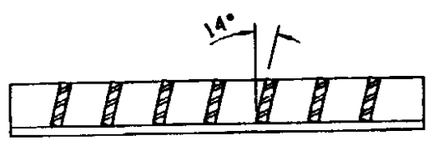

SECTION C-C

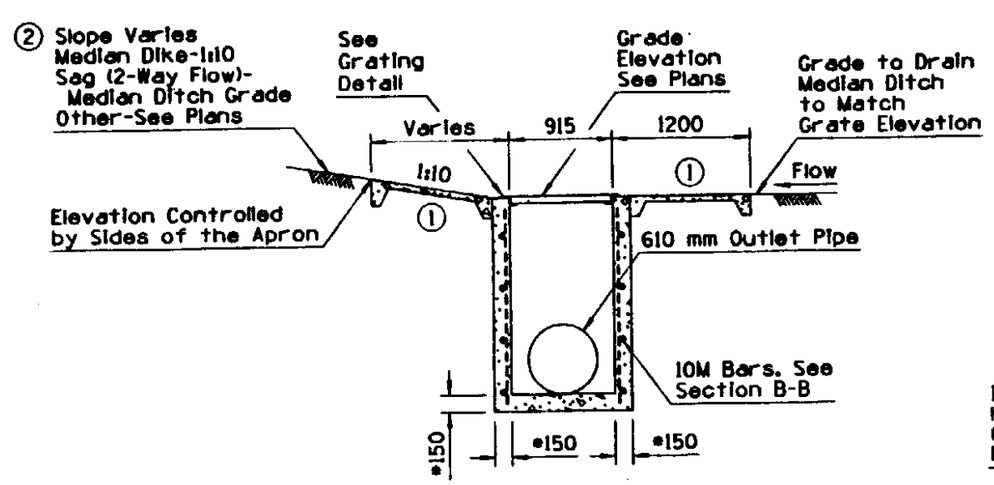

SECTION A-A

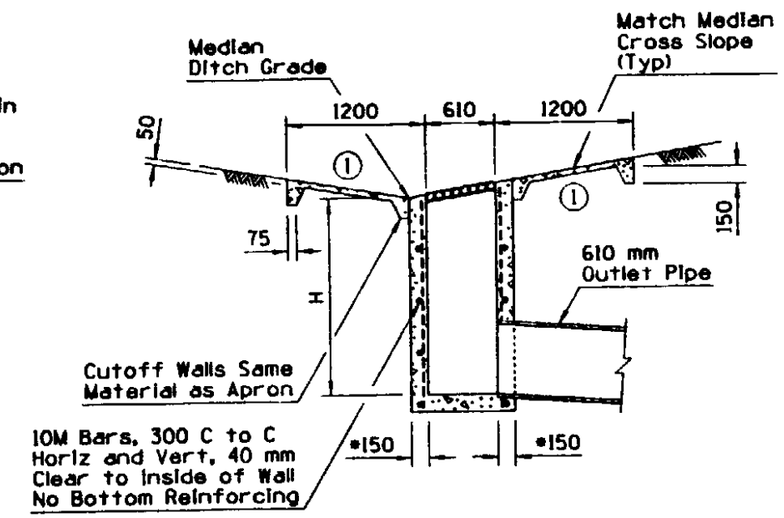

SECTION B-B

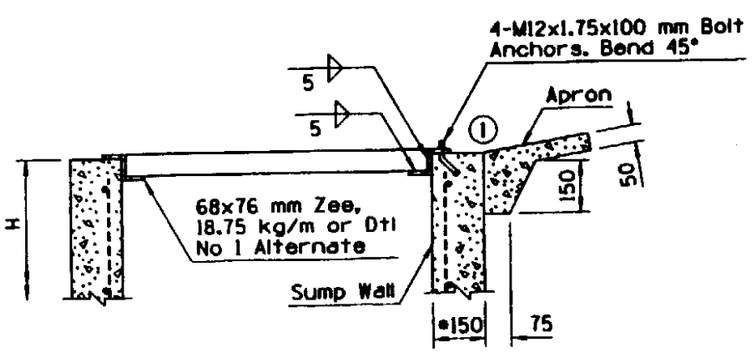

SECTION D-D

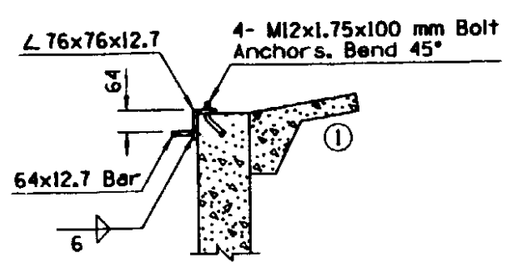

DETAIL NO. 1

DIMENSION TABLE	
Slope	A
1:6	150
1:4	230
1:3	305
1:2	455

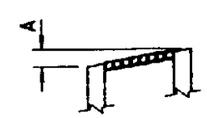

WALL HEIGHT DETAIL

DESIGN APPROVED Terry H. Otterman	STATE OF ARIZONA DEPARTMENT OF TRANSPORTATION INTERMODAL TRANSPORTATION DIVISION STANDARD DRAWINGS	REV. 5/97
APPROVED FOR DISTRIBUTION	CATCH BASIN, MEDIAN SIDE SLOPE	DRAWING NO. C-15.81

Metric