ARIZONA HIGHWAY DEPARTMENT

ROADWAY CONSTRUCTION

STANDARDS

1968

TABLE OF CONTENTS

DRAWING NO.	SUBJECT
C- 1.01	Plans Symbols
C- 1.02	
C- 1.03	
C- 2.01	Slopes, Interstate and Class A-A Roadways
C- 2.02	Slopes, Class A and B Roadways
C- 2.03	Slopes, Class C and D Roadways
C- 2.04	Parabolic Crown
C- 2.05	
C- 2.06	
C- 3.01	Ditches
	Dykes
C- 3.02	
C- 3.03	
C- 4.01	Concrete Spillway, Inlet & Outlet
	Embankment Curb
C- 4.02	Spillway Inlet Corrugated Metal Pipe
	Downdrain, Outlet
C- 4.03	Concrete Spillway Length Table
C- 4.04	Corrugated Metal Pipe Downdrain Length Table
C- 4.05	
C- 4.06	
C- 5.01	Curb, Gutter, Sidewalk and Driveway Details
C- 5.02	Curb and Gutter Measurement and
	Street Intersection Grades
C- 5.03	
C- 5.04	
C- 6.01	Turnout
	Driveway Layout
C- 6.02	Detour Entrance Design Table
C- 6.03	
C- 6.04	
C- 7.01	Transverse Joints for
	Portland Cement Concrete Pavement
C- 7.02	Longitudinal Joints for
	Portland Cement Concrete Pavement
C- 7.03	Pavement Cut Replacement
C- 7.04	
C- 7.05	
C- 8.01	Exit Ramp Geometrics
C- 8.02	Entrance Ramp Geometrics
	Ramp Nose Paving Detail
C- 8.03	
C- 8.04	
C- 9.01	Delineator, Usage
C- 9.02	Delineator, Face Plate Details

DRAWING NO.	SUBJECT
C- 9.03	Delineator, Placement
C- 9.04	Delineator, Post Mounting Details
C- 9.05	Delineator, Mainline Spacing
C- 9.06	Delineator, Interchange Spacing
C- 9.07	Delineator, Spacing Table
C- 9.08	Delineator, Snow Marker
C- 9.09	
C- 9.10	
C-10.01	Guard Rail Steel, Single Face Details
C-10.02	Guard Rail Steel, Double Face & Misc. Details
C-10.03	Guard Rail Steel, Approach End Treatment
C-10.04	Guard Rail Steel, Bridge Approach Installation
C-10.05	Guard Rail Steel, Flare to Median
C-10.06	Guard Rail Steel, Typical Installations
C-10.07	
C-10.08	Concrete Median Barrier Details
C-10.09	Concrete Median Barrier Transition
C-10.10	Median Glare Screen
C-10.11	Chain Link and Cable Barrier Fence
C-10.12	
C-10.13	
C-11.01	Cattle Guard
C-11.02	Cattle Guard, Ranch
C-11.03	Cattle Guard, Railroad
C-11.04	Cattle Guard, Drainage
C-11.05	
C-11.06	
C-12.01	Line Fence and Gates, Steel Posts
C-12.02	Supplemental Fence Details
C-12.03	Fence, Chain Link
C-12.04	Fence, Industrial Type, Fabricated Wire
C-12.05	Barrier Fence
	Barrier Post
C-12.06	
C-12.07	
C-13.01	Pipe Culvert Installation
C-13.02	Reinforced Concrete Pipe Placement
C-13.03	Fill Heights for Reinforced Concrete Pipe
C-13.04	End Section, Reinforced Concrete Pipe
C-13.05	End Section, Corrugated Metal Pipe & Pipe Arch
C-13.06	Design Fill Heights for Corrugated Metal Pipe
C-13.07	Corrugated Metal Pipe Fill Height Design Data
C-13.08	Corrugated Metal Pipe Arch Design Fill Heights
C-13.09	Corrugated Metal Pipe Arch Fill Height Design Data
C-13.10	Corrugated Metal Pipe Arch Fill Heights
C-13.11	Structural Excavation Payment Limits
	Special Backfill Placement
C-13.12	

DRAWING NO.	SUBJECT
C-13.13	
C-14.01	Headwalls-Straight, "L" and "U" Types
C-14.02	Pipe Headwalls, 42" to 84"
C-14.03	Drop Inlet Headwalls
C-14.04	
C-14.05	
C-15.01	Catch Basin-Type 1, Combination
C-15.02	Catch Basin-Type 2, Combination,Adjustable Curb
C-15.03	Catch Basin-Type 3, Curb Opening Only
C-15.04	Catch Basin-Type 4, Grate Opening Only
C-15.05	Catch Basin-Type 5, Combination Sweeper
C-15.06	Catch Basin Grate, Longitudinal Bars
C-15.07	Catch Basin Grate, Transverse Bars
C-15.08	Portland Cement Concrete Depressed Apron
C-15.09	Catch Basin, Median
C-15.10	Catch Basin, Median Dyke
C-15.11	
C-15.12	
C-16.01	Irrigation Headwalls
C-16.02	Irrigation Standpipes
C-16.03	Irrigation Valve and Gates
C-16.04	
C-16.05	
C-17.01	Bank Protection-Types 1, 2, & 3
C-17.02	Bank Protection-Types 4, 5, & 6
C-17.03	Riprap
C-17.04	
C-17.05	
C-18.01	Manhole Details
C-18.02	Manhole Frame and Cover Details
C-18.03	
C-18.04	
C-19.01	Ford, Concrete Walls
C-19.02	Fords
C-19.03	
C-19.04	
C-20.01	Railroad Crossing Signs
C-20.02	
C-20.03	
C-21.01	Survey Monument and Right of Way Markers
C-21.02	Standard Markers
C-21.03	
C-21.04	
C-22.01	Slab over Utility Line

GENERAL NOTE: The term Plans, as used herein, shall refer to the Roadway Construction Plans.

STATE OR NATIONAL LINE
COUNTY LINE
TOWNSHIP OR RANGE LINE
SECTION LINE
QUARTER SECTION LINE
FOREST OR RESERVATION LINE — Shading on inside of line
HIGHWAY R/W LINE
CONTROL OF ACCESS LINE — BLU ZIP NO. 333 & CHART PAK 256 TAA 1/8" WIDE — Shading on outside of line
UNFENCED PROPERTY — Blu-Zip No. 113
CITY LIMITS
SECTION AND QUARTER CORNERS
COMBINED CURB & GUTTER — Depressed for driveway — 20' D.C. — Existing
SIDE ROAD TURNOUT (1)-(2) — New — Existing
GROUND LINE
EXISTING ROAD (2) — Width & type
OBLITERATE PAVEMENT (2) — Blu-Zip No. 438
NEW CONCRETE PAVEMENT (1) — Blu-Zip No. 340
NEW BIT. MIX. PAVEMENT (1) — Blu-Zip No. 309
EXISTING PAVEMENT (2) — Blu-Zip No. 310
BIT. PAVEMENT (SECTION)
P.C. CONCRETE (SECTION)
AGGREGATE BASE
SELECT MATERIAL
SUBGRADE SEAL

TREES AND SHRUBS
TRAFFIC SIGN
ADVERTISING SIGN — Large — Small
GUARD RAIL — New — Existing
BARRIER POST - HAZARD MARKER
STANDARD BARBED WIRE FENCE — Gate
WOOD FENCE
FABRIC WIRE FENCE
CATTLE GUARD (1)-(2) — New — Existing
CHANNEL OR DITCH
DYKE OR LEVEE
BANK PROTECTION
RETAINING WALL
PIPE CULVERTS (1)-(2) — New — Existing
REINF. CONC. BOX CULV (1)-(2) — New — Existing
C.M.P. DOWNDRAIN — 1-Way — 2-Way
CONCRETE SPILLWAY — 1-Way — 2-Way
DROP INLET OR CATCH BASIN
MANHOLE — New — Exist. — To be Adjusted
FIRE HYDRANT — New — Exist.
VALVE (WATER OR GAS) — W — G
METER BOX
TELEPHONE BOOTH
STREET LIGHT — On. Ext. Arm
DOWN GUY AND ANCHOR
TELEPHONE OR TELEGRAPH LINE
POWER LINE OR JOINT LINE
WATER LINE — W — 2"
GAS LINE — G — 3"
IRRIGATION LINE — IRR — 12"
STORM SEWER — SS — 30"
SANITARY SEWER — S — 8"

B. P. R. REGION	STATE	PROJ. NO.	SHEET NO.	TOTAL SHEETS	AS BUILT
7	ARIZ.				
7½"/10	5"/10	1 5"/10	5"/10	5"/10	1"

1"/4 — 3"/10 — 1"/4

RAILROAD CROSSING SIGNS — Advance Warning — X Buck — Flashing Light
RAILROAD TRACK
WELL OR PUMP HOUSE
SURVEY MONUMENT (1)-(2) — New — Exist.
R/W MARKER (1)-(2) — New — Exist.
MILE POST — New — Exist.
ANGLE POINT AND ANGLE (1)-(2)

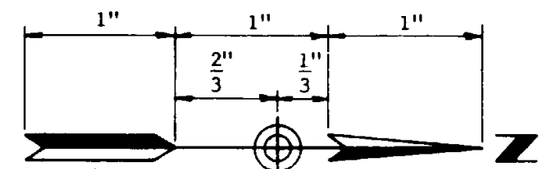

USE ON LARGE SCALE DRAWINGS

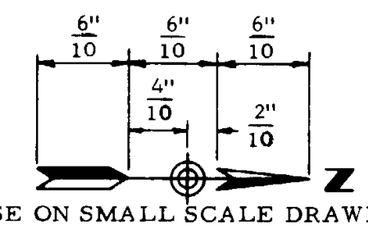

USE ON SMALL SCALE DRAWINGS

(1) New: No. 1 Rapidograph line width.
(2) Existing: No. 00 Rapidograph line width. (Back of plan sheet)

ARIZONA HIGHWAY DEPARTMENT
PLANS DIVISION

PLANS SYMBOLS

Drawn	R.A.F. 8/67	Drawing No.
Traced		C-1.01
Checked	J.P.O. JPO 5-68	
Approved Engr. Plans	[illegible] 5-68	

Rev

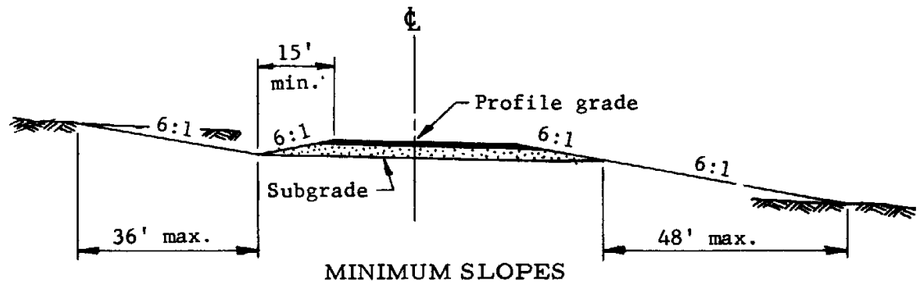

MINIMUM SLOPES

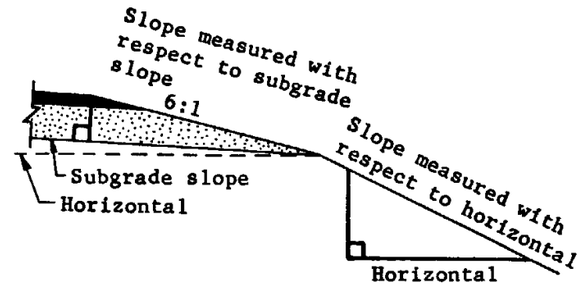

DETAIL ILLUSTRATING
SUBGRADE & EMBANKMENT
SLOPE CONTROL

GENERAL NOTES

The desirable maximum embankment slope rate shall be 4:1 within interchange and grade separation areas.

See Plans for details of; roadway width, cut ditch, type and thickness of roadway surfacing, and superelevation.

Standard cut and embankment slopes as shown on this sheet may be superseded by special slopes where shown on Plans.

For cuts up to 6' use 5' semi-tangents for slope rounding. For each additional foot of cut add 1' to semi-tangent to 11' maximum.

Should median slopes intersect see design supplement sheet.

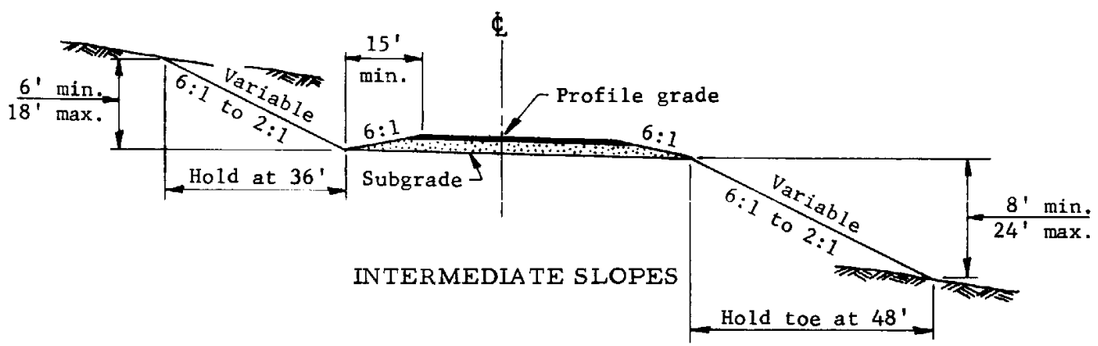

INTERMEDIATE SLOPES

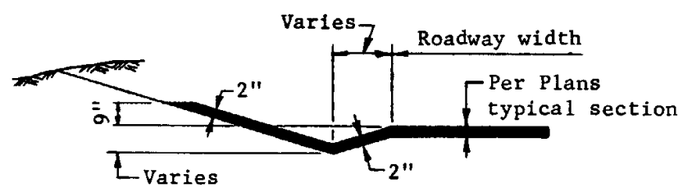

PAVED GUTTER IN CUTS

NOTE: Std. slope rounding not shown. See General Notes.

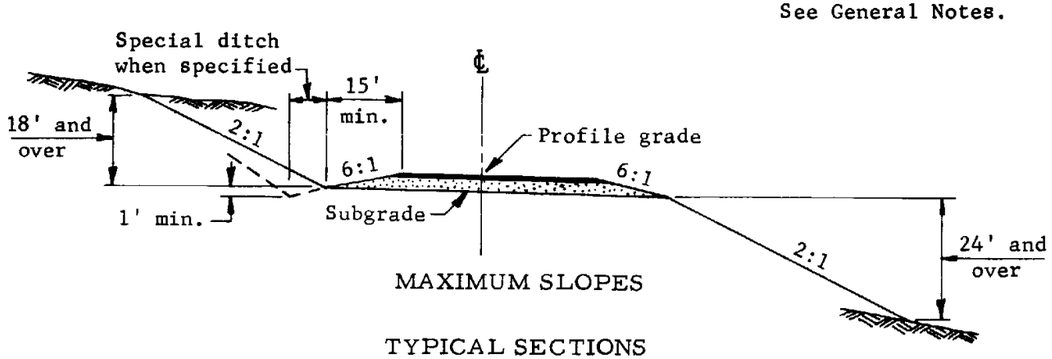

MAXIMUM SLOPES

TYPICAL SECTIONS

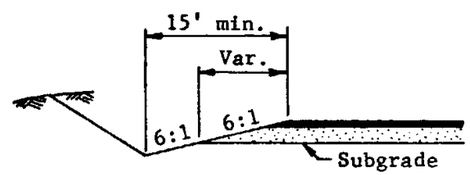

MINIMUM DITCH CONDITION

ARIZONA HIGHWAY DEPARTMENT
PLANS DIVISION

SLOPES INTERSTATE AND CLASS A-A ROADWAYS

Drawn	R.A.F. 11-67	Drawing No.
Traced	R.A.F. 11-67	C-2.01
Checked	J.P.O.	
Approved Engr. Plans		

Rev

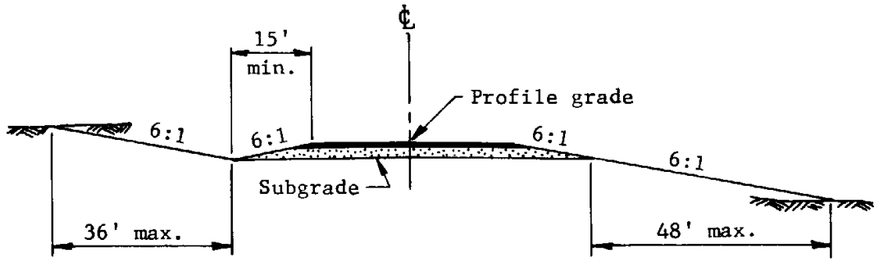

MINIMUM SLOPES

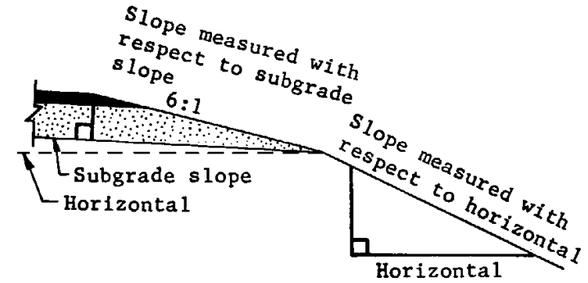

DETAIL ILLUSTRATING
SUBGRADE & EMBANKMENT
SLOPE CONTROL

NOTE: Std. slope rounding not shown. See General Notes.

GENERAL NOTES

See Plans for details of; roadway width, cut ditch, type and thickness of roadway surfacing, superelevation, and curve widening.

Standard cut and embankment slopes as shown on this sheet may be superseded by special slopes where shown on Plans.

For cuts up to 6' use 5' semi-tangents for slope rounding. For each additional foot of cut add 1' to semi-tangent to 11' maximum.

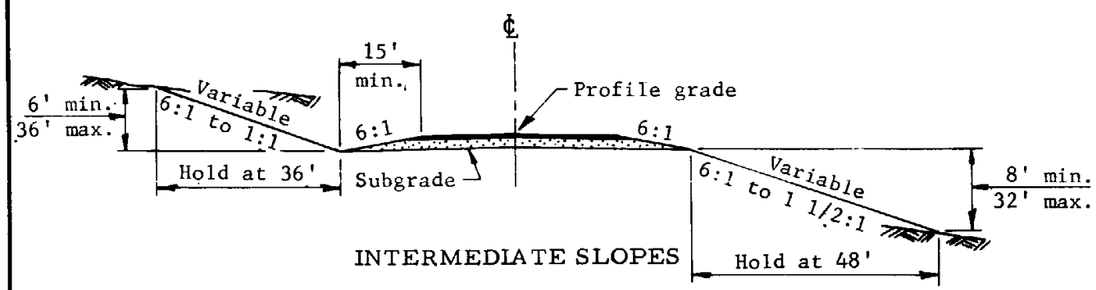

INTERMEDIATE SLOPES

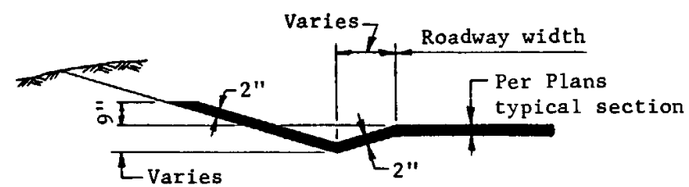

PAVED GUTTER IN CUTS

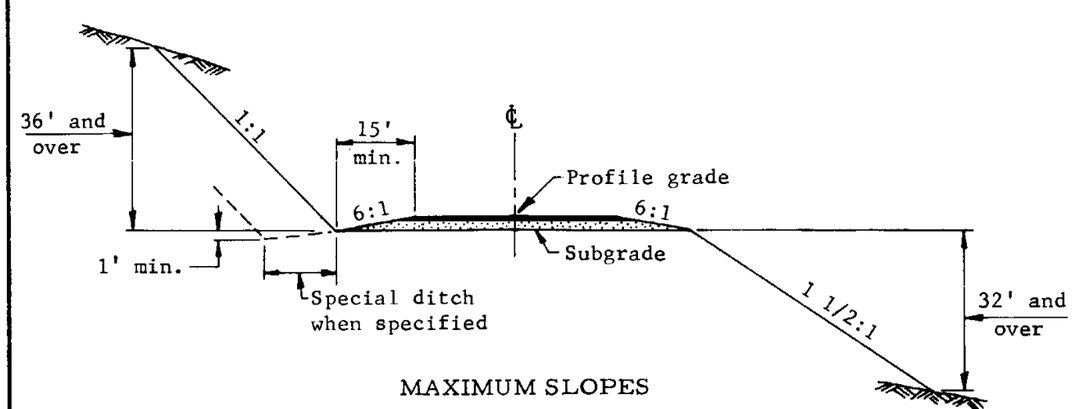

MAXIMUM SLOPES

TYPICAL SECTIONS

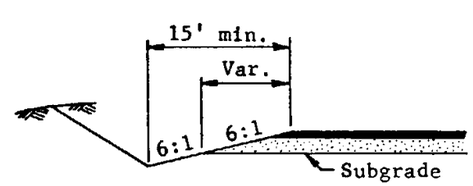

MINIMUM DITCH CONDITION

ARIZONA HIGHWAY DEPARTMENT PLANS DIVISION			Rev
SLOPES CLASS A & B ROADWAYS			
Drawn	S.L.T. 11-67	Drawing No.	
Traced	R.A.F. 11-67	C-2.02	
Checked	J.P.O.		
Approved Engr. Plans	Heidecker 5-68		

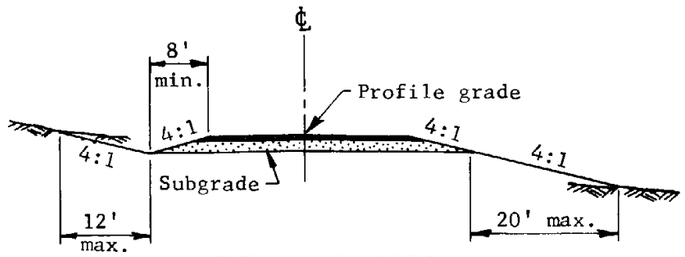

MINIMUM SLOPES

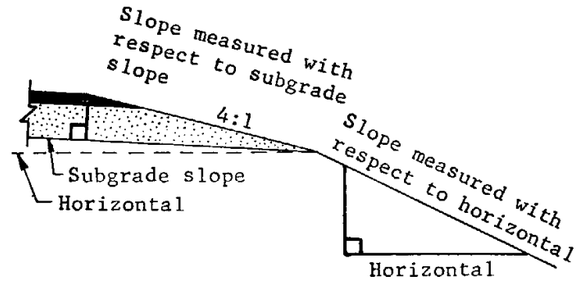

DETAIL ILLUSTRATING
SUBGRADE & EMBANKMENT
SLOPE CONTROL

NOTE: Std. slope rounding not shown. See General Notes.

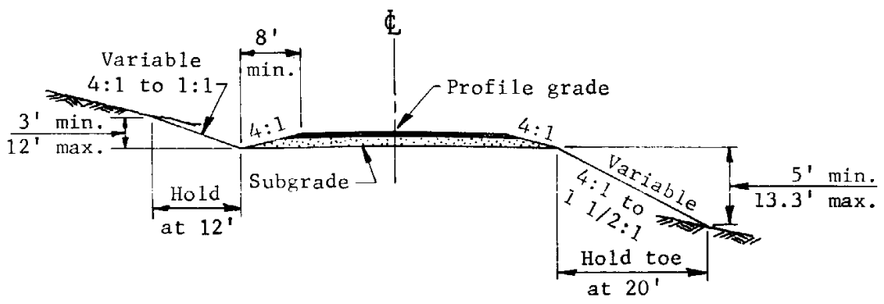

INTERMEDIATE SLOPES

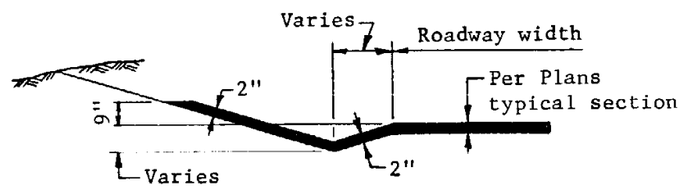

PAVED GUTTER IN CUTS

GENERAL NOTES

See Plans for details of; roadway width, cut ditch, type and thickness of roadway surfacing, superelevation, and curve widening.

Standard cut and embankment slopes as shown on this sheet may be superseded by special slopes where shown on Plans.

For cuts up to 6' use 5' semi-tangents for slope rounding. For each additional foot of cut add 1' to semi-tangent to 11' maximum.

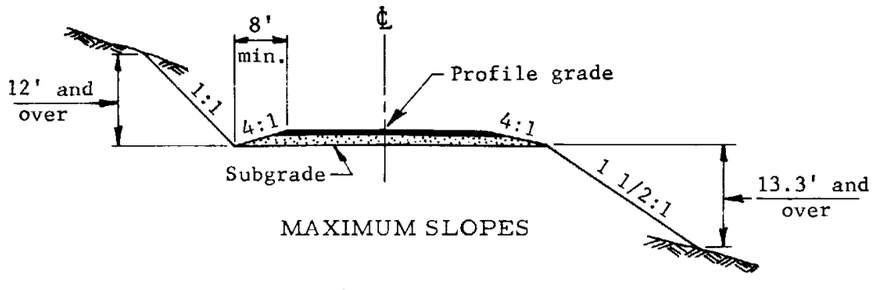

MAXIMUM SLOPES

TYPICAL SECTIONS

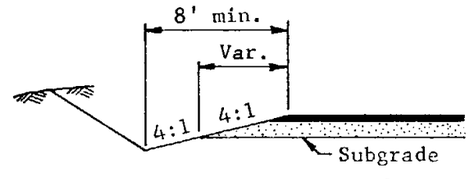

MINIMUM DITCH CONDITION

ARIZONA HIGHWAY DEPARTMENT PLANS DIVISION			Rev
SLOPES CLASS C & D ROADWAYS			
Drawn	S.L.T. 11-67	Drawing No.	
Traced	R.A.F. 11-67	C-2.03	
Checked	J.P.O.		
Approved Engr. Plans	H. Heidecker 5-68		

CUMULLATIVE PERCENT OF CROWN "C" FOR EACH FOOT RIGHT OR LEFT OF ℄

W = FULL WIDTH OF ROADWAY - FEET

X →	2'	4'	6'	8'	10'	12'	14'	16'	18'	20'	22'	24'	26'	28'	30'	32'	34'	36'	38'	40'	42'	44'
90	0.20	0.79	1.78	3.16	4.94	7.11	9.68	12.64	16.00	19.75	23.90	28.44	33.38	38.72	44.44	50.57	57.09	64.00	71.31	79.01	87.11	95.61
88	0.21	0.83	1.86	3.31	5.17	7.44	10.12	13.22	16.74	20.66	25.00	29.75	34.92	40.50	46.49	52.89	59.71	66.94	74.59	82.64	91.12	C
86	0.22	0.87	1.95	3.46	5.41	7.79	10.60	13.85	17.52	21.63	26.18	31.15	36.56	42.40	48.67	55.38	62.52	70.09	78.10	86.53	95.40	
84	0.23	0.91	2.04	3.63	5.67	8.16	11.11	14.51	18.37	22.68	27.44	32.65	38.32	44.44	51.02	58.05	65.53	73.47	81.86	90.70	C	
82	0.24	0.95	2.14	3.81	5.95	8.57	11.66	15.23	19.27	23.80	28.79	34.27	40.21	46.64	53.54	60.92	68.77	77.10	85.90	95.18		
80	0.25	1.00	2.25	4.00	6.25	9.00	12.25	16.00	20.25	25.00	30.25	36.00	42.25	49.00	56.25	64.00	72.25	81.00	90.25	C		
78	0.26	1.05	2.37	4.20	6.57	9.47	12.89	16.83	21.30	26.30	31.82	37.87	44.44	51.54	59.17	67.32	76.00	85.21	94.94			
76	0.28	1.11	2.49	4.43	6.93	9.97	13.57	17.73	22.44	27.70	33.52	39.89	46.81	54.29	62.33	70.91	80.06	89.75	C			
74	0.29	1.17	2.63	4.67	7.30	10.52	14.32	18.70	23.67	29.22	35.35	42.07	49.38	57.27	65.74	74.80	84.44	94.67				
72	0.31	1.23	2.78	4.94	7.72	11.11	15.12	19.75	25.00	30.86	37.35	44.44	52.16	60.49	69.44	79.01	89.20	C				
70	0.33	1.31	2.94	5.22	8.16	11.76	16.00	20.90	26.45	32.65	39.51	47.02	55.18	64.00	73.47	83.59	94.37					
68	0.35	1.38	3.11	5.54	8.65	12.46	16.95	22.15	28.03	34.60	41.87	49.83	58.48	67.82	77.85	88.58	C					
66	0.37	1.47	3.30	5.87	9.18	13.21	17.99	23.49	29.73	36.71	44.41	52.86	62.03	71.94	82.59	93.97						
64	0.39	1.56	3.52	6.25	9.77	14.06	19.14	25.00	31.64	39.06	47.27	56.25	66.02	76.56	87.89	C						
62	0.42	1.66	3.75	6.66	10.41	14.98	20.40	26.64	33.71	41.62	50.36	59.94	70.34	81.58	93.65							
60	0.44	1.78	4.00	7.11	11.11	16.00	21.78	28.44	36.00	44.44	53.78	64.00	75.11	87.11	C							
58	0.48	1.90	4.28	7.61	11.89	17.12	23.31	30.44	38.52	47.56	57.55	68.49	80.38	93.22								
56	0.51	2.04	4.59	8.16	12.76	18.37	25.00	32.65	41.33	51.02	61.73	73.47	86.22	C								
54	0.55	2.19	4.94	8.78	13.72	19.75	26.89	35.12	44.44	54.87	66.39	79.01	92.73									
52	0.59	2.37	5.33	9.47	14.79	21.30	28.99	37.87	47.93	59.17	71.60	85.21	C									
50	0.64	2.56	5.76	10.24	16.00	23.04	31.36	40.96	51.84	64.00	77.44	92.16										
48	0.69	2.78	6.25	11.11	17.36	25.00	34.03	44.44	56.25	69.44	84.03	C										
46	0.76	3.02	6.81	12.10	18.90	27.22	37.05	48.39	61.25	75.61	91.49											
44	0.83	3.31	7.44	13.22	20.66	29.75	40.50	52.89	66.94	82.64	C											
42	0.91	3.63	8.16	14.51	22.68	32.65	44.44	58.05	73.47	90.70												
40	1.00	4.00	9.00	16.00	25.00	36.00	49.00	64.00	81.00	C												
38	1.11	4.43	9.97	17.73	27.70	39.89	54.29	70.91	89.75													
36	1.23	4.94	11.11	19.75	30.86	44.44	60.49	79.01	C													
34	1.38	5.50	12.46	22.15	34.60	49.83	67.82	88.58														
32	1.56	6.25	14.06	25.00	39.06	56.25	76.56	C														
30	1.78	7.11	16.00	28.44	44.44	64.00	87.11															
28	2.04	8.16	18.37	32.65	51.02	73.47	C															
26	2.37	9.47	21.30	37.87	59.17	85.21																
24	2.78	11.11	25.00	44.44	69.44	C																
22	3.31	13.22	29.75	52.89	82.64																	
20	4.00	16.00	36.00	64.00	C																	
18	4.94	19.75	44.44	79.01																		
16	6.25	25.00	56.25	C																		
14	8.16	32.65	73.47																			
12	11.11	44.44	C																			

FORMULA

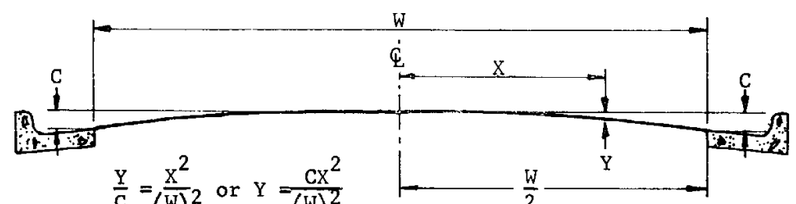

$$\frac{Y}{C} = \frac{X^2}{\left(\frac{W}{2}\right)^2} \text{ or } Y = \frac{CX^2}{\left(\frac{W}{2}\right)^2}$$

USE OF TABLE

Example:

Assume W = 40 ft. and C = 0.45 ft.
Find Y for X = 8 ft.

Table shows Y = 16.00% of C,
or 0.045 X 0.16 = 0.072 ft.

ARIZONA HIGHWAY DEPARTMENT
PLANS DIVISION

PARABOLIC CROWN FORMULA AND TABLE

Drawn	L.McD. 6-41	Drawing No.
Traced	S.L.T. 7-67	
Checked	J.P.O. JPO 5-68	C-2.04
Approved Engr. Plans	G Steidecker 5-68	

Rev.

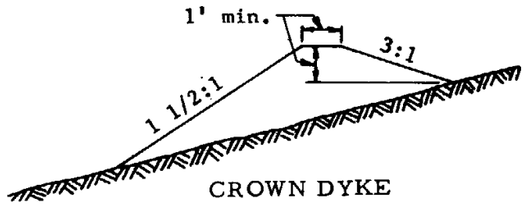

CROWN DYKE

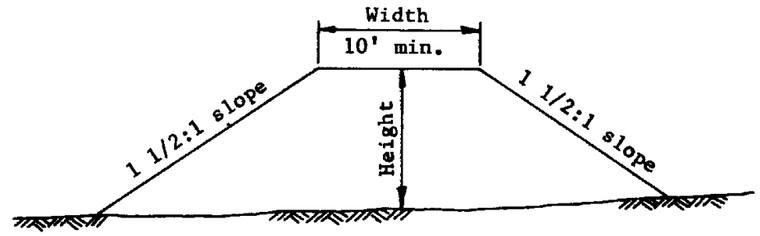

TYPE A DYKE

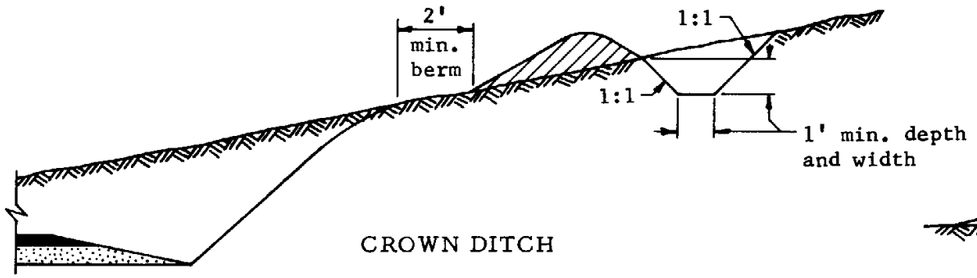

CROWN DITCH

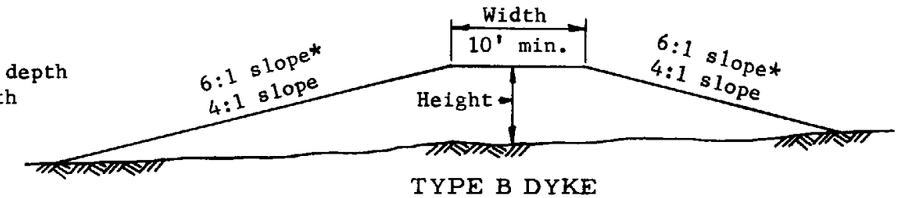

TYPE B DYKE

* TYPE M DYKE

GENERAL NOTES

Bituminous or soil cement protection shall be applied to dyke surfaces as called for on Plans.

Dimensions of ditches and dykes, as shown on Plans, are width, depth or height and length.

Grader Ditches and crown ditches or dykes shall be constructed with a minimum grade to prevent excessive erosion. Ditch outlets should be provided where possible.

Ditch sections shown may be varied by the Engineer.

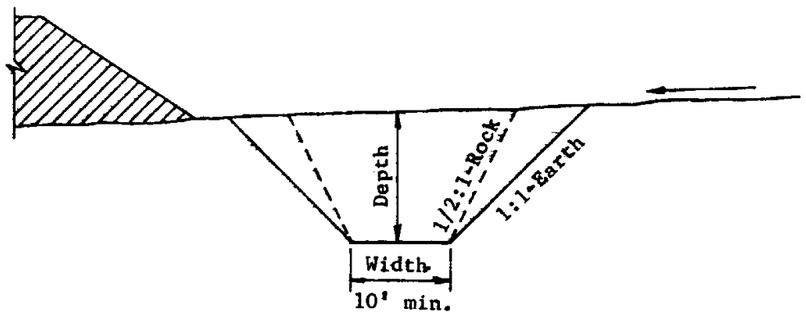

CHANNEL

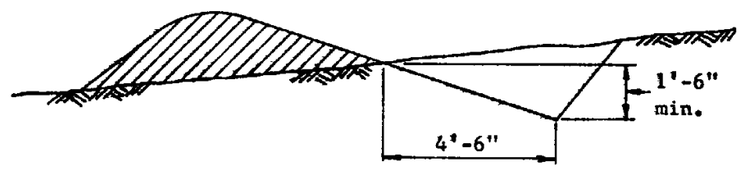

GRADER DITCH

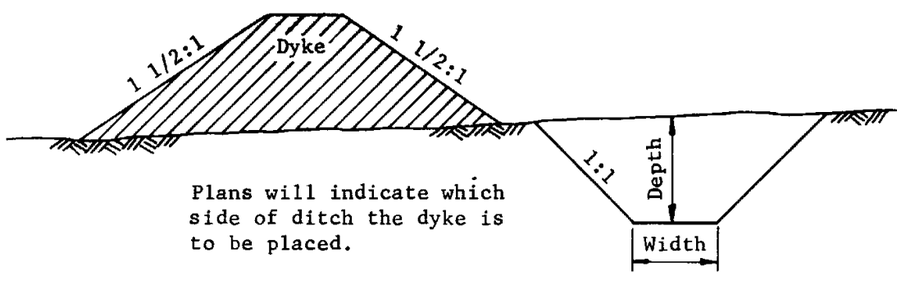

Plans will indicate which side of ditch the dyke is to be placed.

DITCH AND DYKE

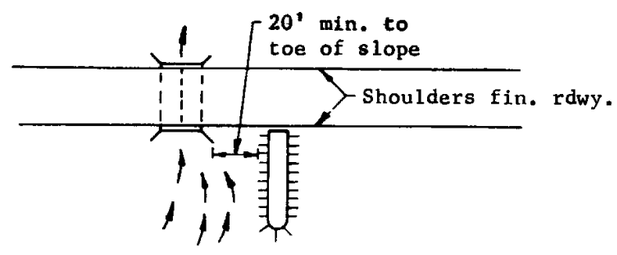

TYPICAL DYKE INSTALLATION AT STRUCTURE

Place dykes at structures to create a water cushion.

ARIZONA HIGHWAY DEPARTMENT
PLANS DIVISION

Rev

DITCHES AND DYKES

Drawn	G.H. 12-45	Drawing No.
Traced	R.A.F. 10-67	C-3.01
Checked	J.P.O. JPO 5-68	
Approved Engr. Plans	G Heidecker 5-68	

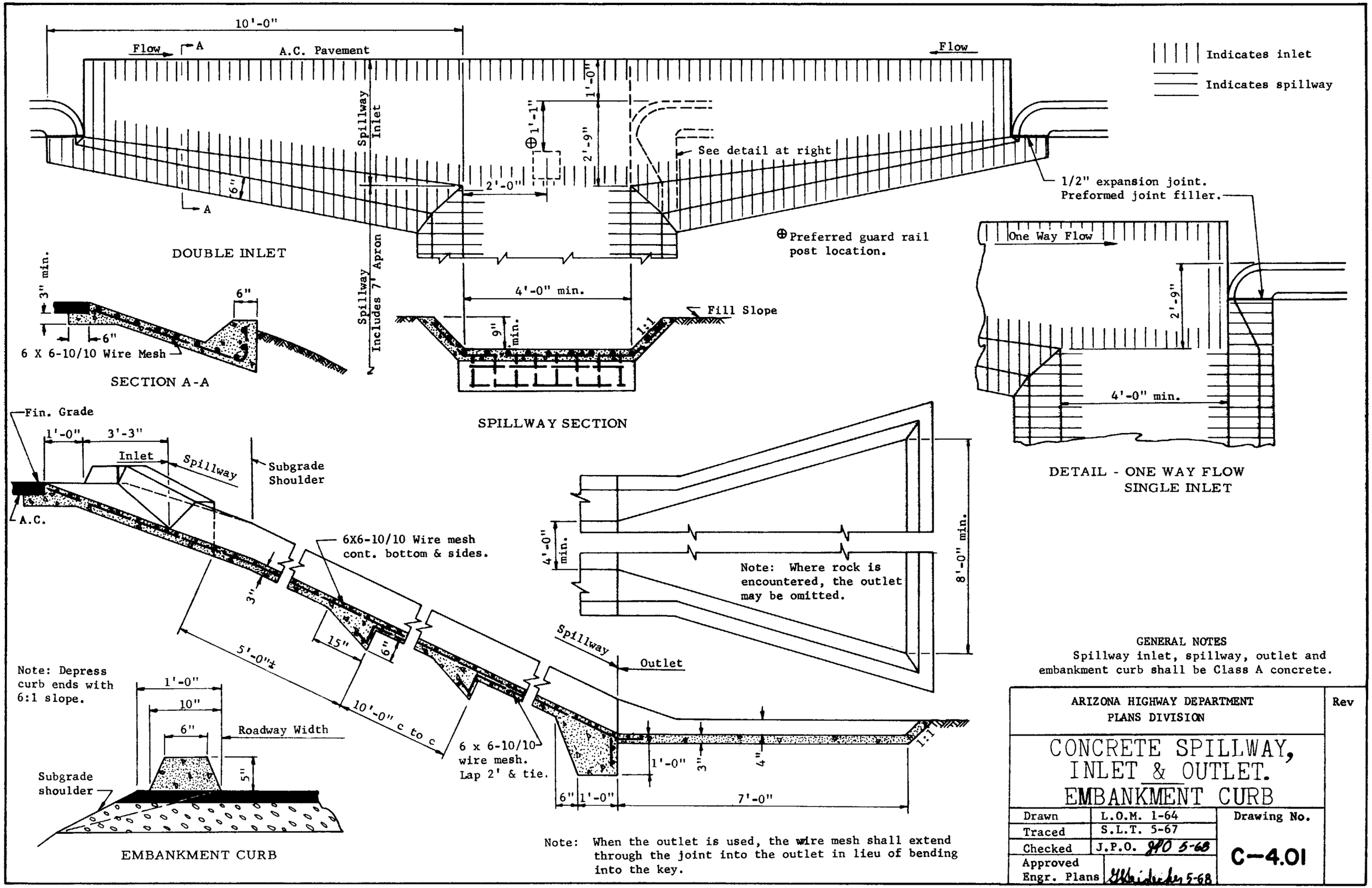

GENERAL NOTES

Spillway inlet, spillway, outlet and embankment curb shall be Class A concrete.

ARIZONA HIGHWAY DEPARTMENT PLANS DIVISION			Rev
CONCRETE SPILLWAY, INLET & OUTLET. EMBANKMENT CURB			
Drawn	L.O.M. 1-64	Drawing No.	
Traced	S.L.T. 5-67		
Checked	J.P.O. JPO 5-68	C-4.01	
Approved Engr. Plans	GWeidner 5-68		

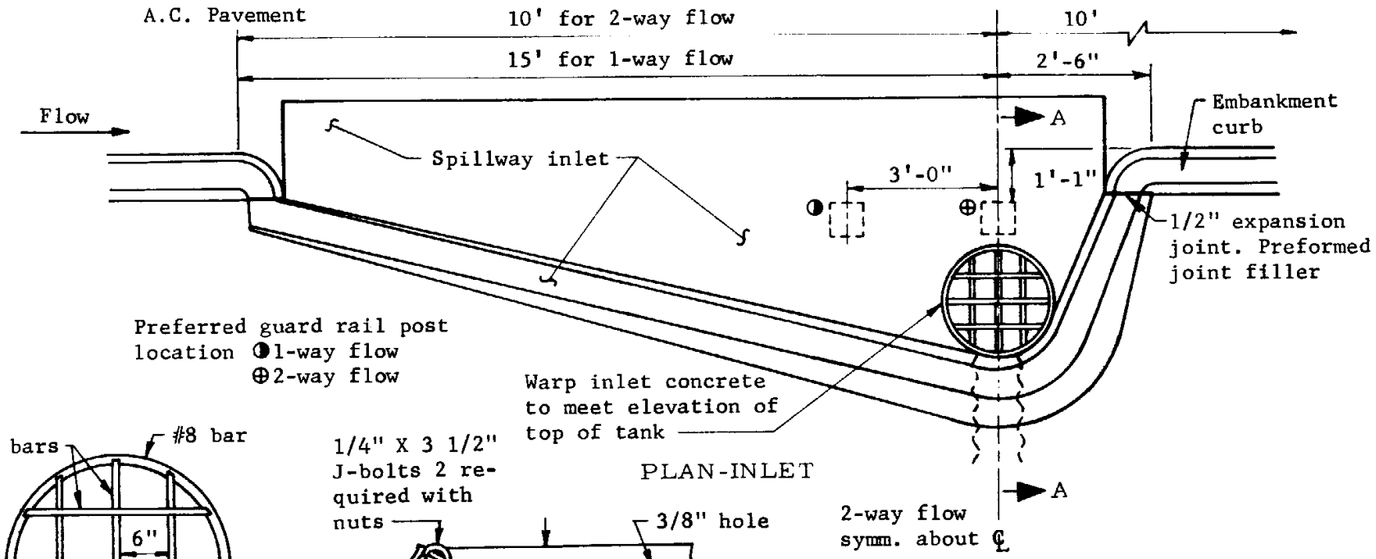

PLAN-INLET

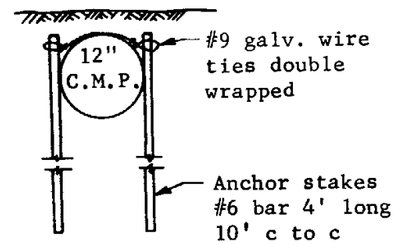

DETAIL ANCHOR

GENERAL NOTES

Use 12", 16 ga. corrugated pipe.

24" X 4'-0" C.M.P. tank, with open bottom and 6" X 1'-0" C.M.P. stub, and angle supports shall be shop fabricated and galvanized in accordance with AASHO M 36.

See Detail for rock installation.

Round all exposed concrete corners.

QUANTITIES

	Spillway Inlet
1-Way	1.55 C.Y. Class A Conc. 33# Reinf. Steel
2-Way	2.08 C.Y. Class A Conc. 37# Reinf. Steel
Headwall	1.00 C.Y. Class A Conc. 25# Reinf. Steel
Apron	0.80 C.Y. Class A Conc. 6# Reinf. Steel

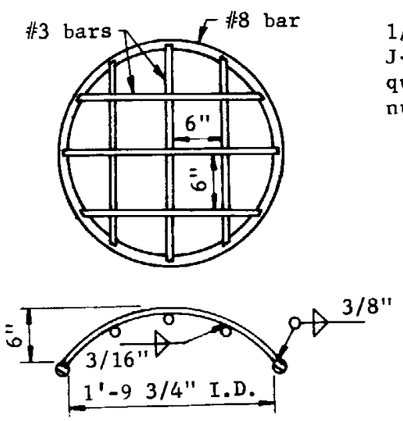

DETAIL-TRASH RACK
TO BE GALVANIZED

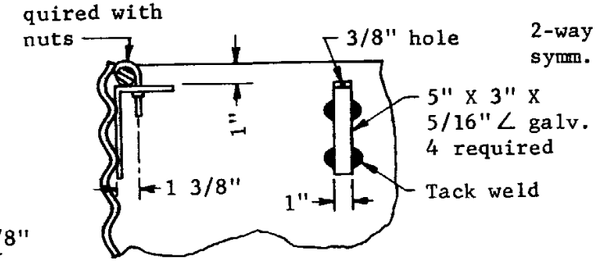

DETAIL-ANGLE SUPPORTS FOR TRASH RACK

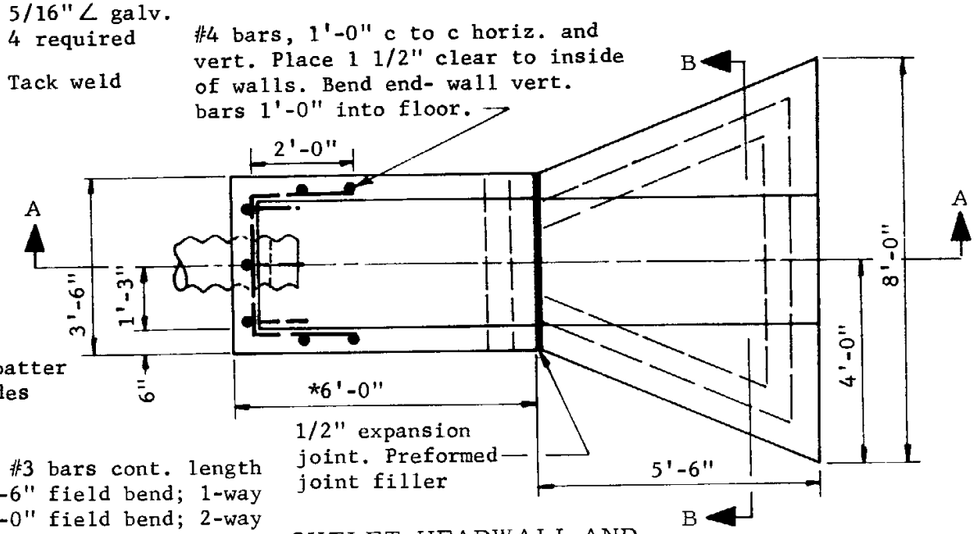

OUTLET-HEADWALL AND CONCRETE APRON

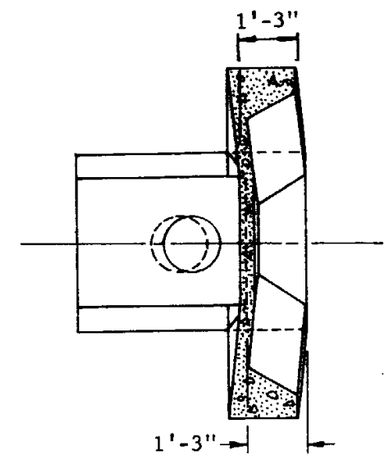

SECTION B-B

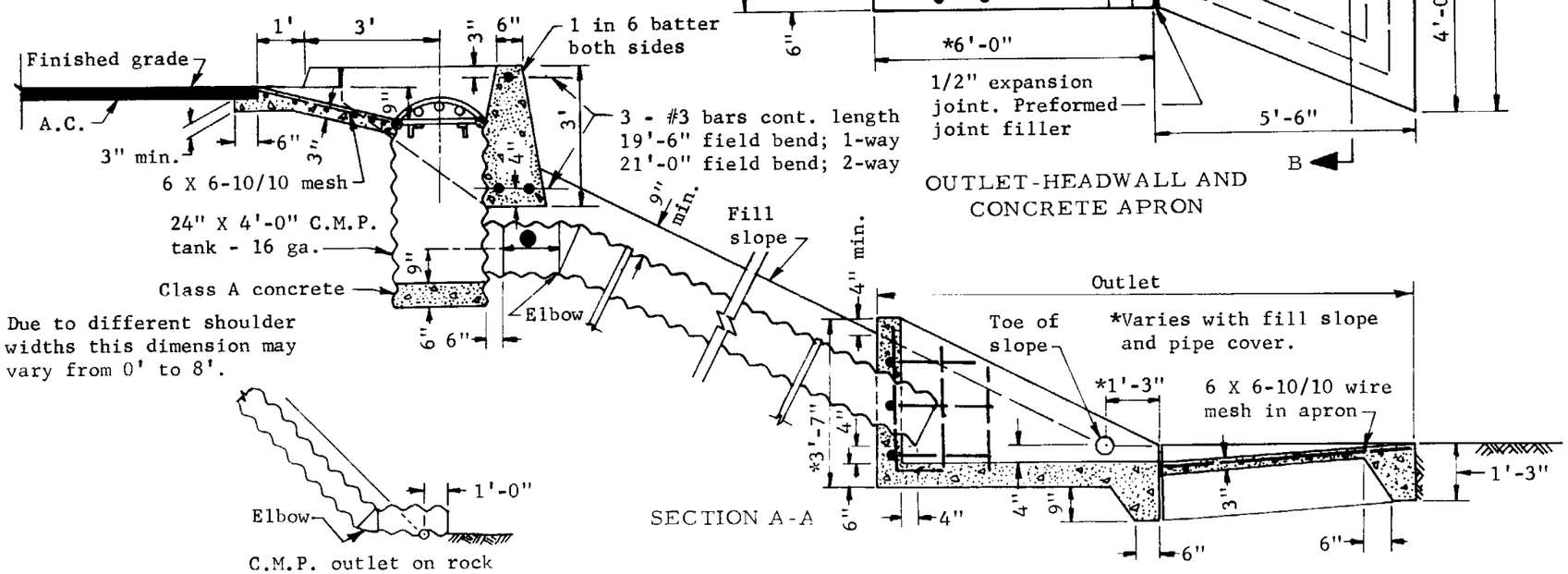

● Due to different shoulder widths this dimension may vary from 0' to 8'.

C.M.P. outlet on rock

SECTION A-A

ARIZONA HIGHWAY DEPARTMENT PLANS DIVISION			Rev
SPILLWAY INLET C.M.P. DOWNDRAIN OUTLET			
Drawn	L.O.M. & D.G.	Drawing No.	
Traced	S.L.T. & R.A.F.	C-4.02	
Checked	J.P.O. JPO 5-68		
Approved Engr. Plans	G Weidecker 5-68		

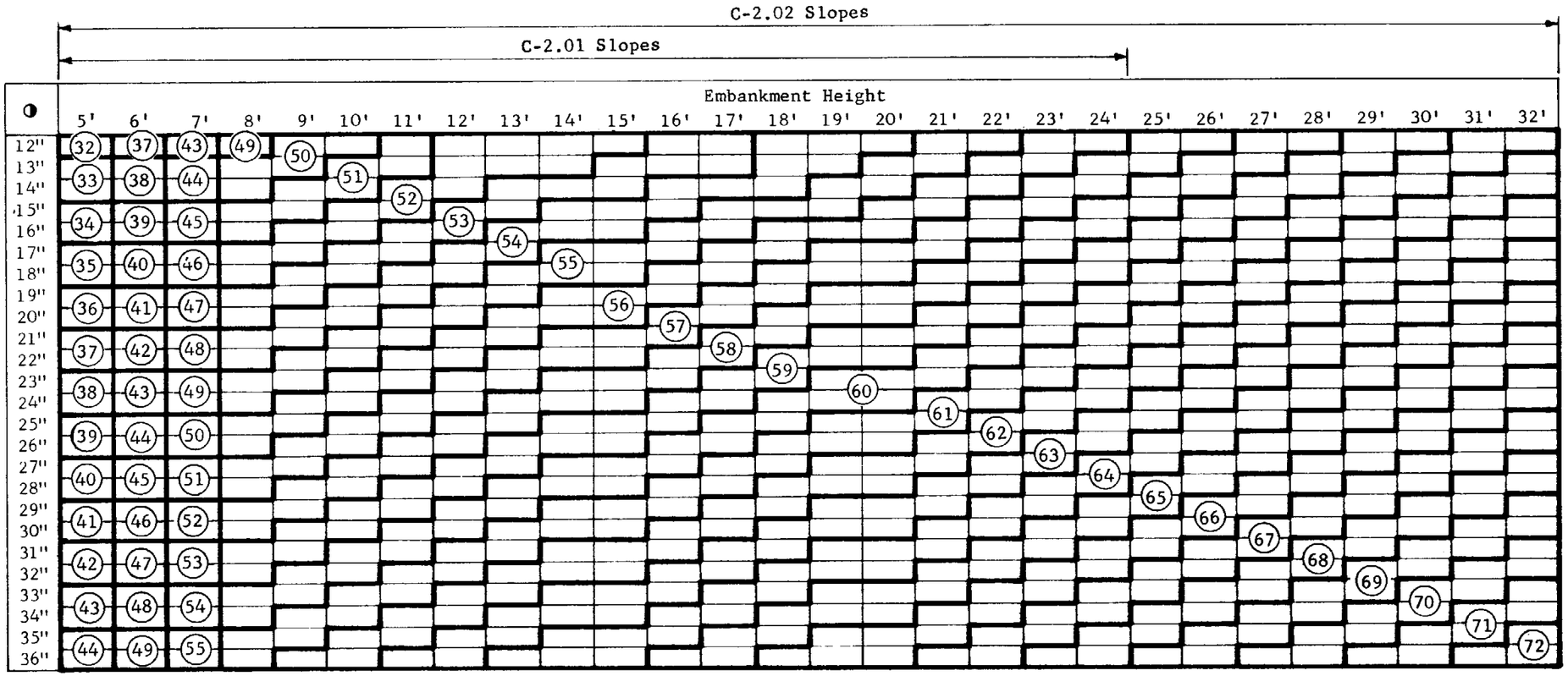

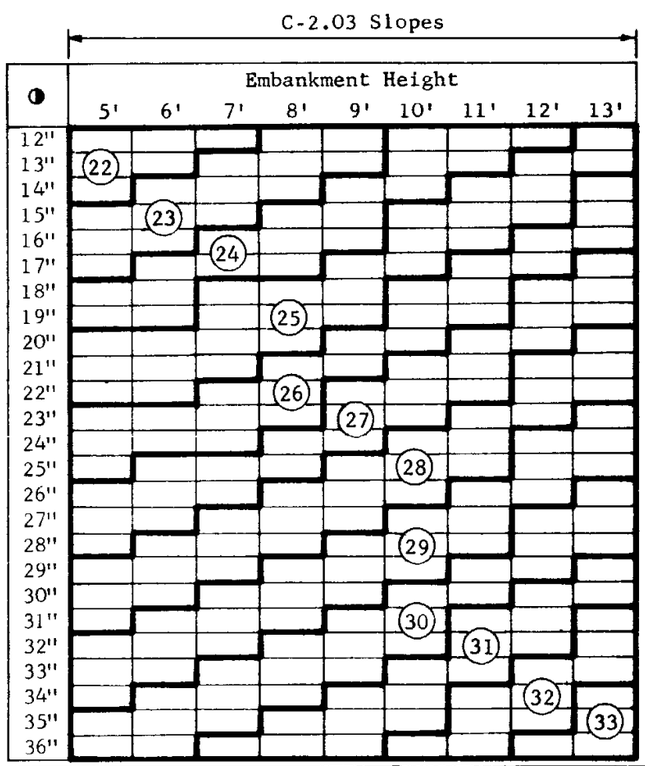

◑Thickness of pavement structure

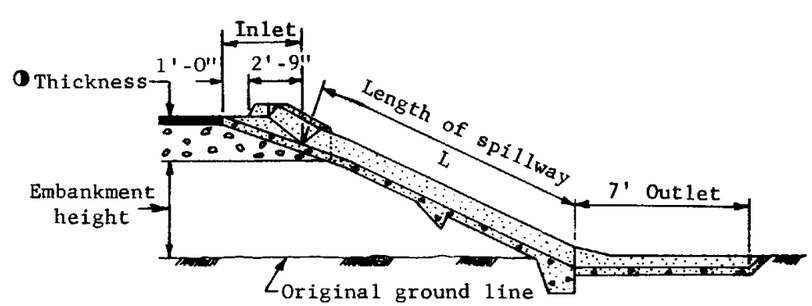

GENERAL NOTES

For C-2.01 slopes with emb. height over 24', L = L for 24' emb. height from table + 2.24(emb. height - 24).

For C-2.02 slopes with emb. height over 32', L = L for 32' emb. height from table + 1.8(emb. height - 32).

For C-2.03 slopes with emb. height over 13', L = L for 13' emb. height from table + 1.8(emb. height - 13).

ARIZONA HIGHWAY DEPARTMENT
PLANS DIVISION

CONCRETE SPILLWAY LENGTH TABLE

Drawn	D.C. 12-67	Drawing No.
Traced	D.C. 1-68	C-4.03
Checked	J.P.O. 5-68	
Approved Engr. Plans	G Weidecker 5-68	

Rev

C-2.02 Slopes

C-2.01 Slopes

◑	Embankment Height																									
	7'	8'	9'	10'	11'	12'	13'	14'	15'	16'	17'	18'	19'	20'	21'	22'	23'	24'	25'	26'	27'	28'	29'	30'	31'	32'
12"	32	38																								
13"			46																							
14"		40																								
15"	34				48																					
16"						50																				
17"																										
18"		42							52																	
19"	36																									
20"											54															
21"																										
22"		44											56													
23"	38																									
24"														58												
25"																										
26"		46														60										
27"	40																									
28"																		62								
29"																										
30"		48																		64						
31"	42																									
32"																						66				
33"																										
34"		50																						68		
35"	44																									
36"																										70

C-2.03 Slopes

◑	Embankment Height								
	5'	6'	7'	8'	9'	10'	11'	12'	13'
12"									
13"	14	16							
14"						20			
15"									
16"			18						
17"									
18"	16					22			
19"									
20"									
21"									
22"			20						
23"									
24"	18					24			
25"									
26"									
27"									
28"			22						
29"									
30"	20					26			
31"									
32"									
33"									
34"			24						
35"	22						28		
36"				26					30

◑ Thickness of pavement structure

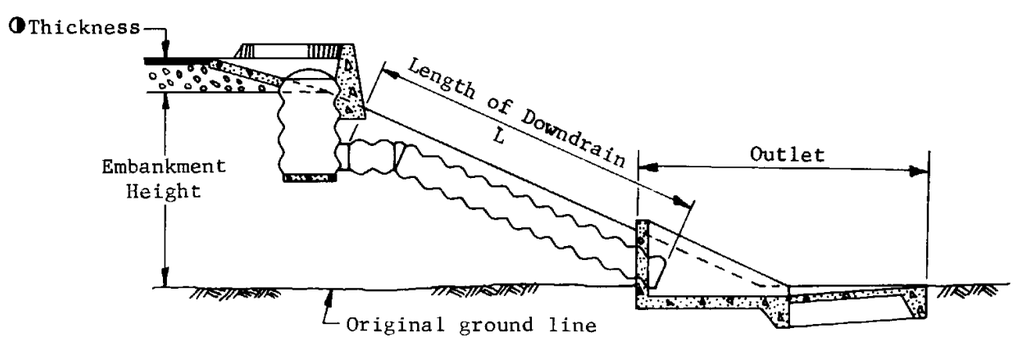

GENERAL NOTES

For C-2.01 slopes with emb. height over 24', L = L for 24' emb. height from table + 2.24(emb. height - 24).

For C-2.02 slopes with emb. height over 32', L = L for 32' emb. height from table + 1.8(emb. height - 32).

For C-2.03 slopes with emb. height over 13', L = L for 13' emb. height from table + 1.8(emb. height - 13).

ARIZONA HIGHWAY DEPARTMENT
PLANS DIVISION

C.M.P. DOWNDRAIN LENGTH TABLE

Drawn	J.W. & D.G. 2-67	Drawing No.
Traced	R.A.F. 12-67	C-4.04
Checked	J.P.O. JPO 5-68	
Approved Engr. Plans	G Weidecker 5-68	

Rev

NOTE: Radii shown for single curbs are typical throughout for respective type.
h=curb height as shown on Plans.

SINGLE CURB

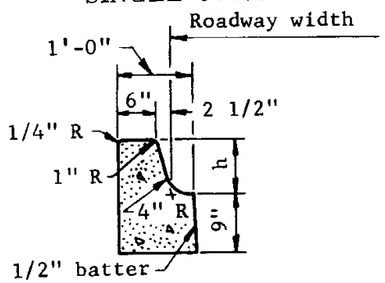

COMBINED CURB & GUTTER

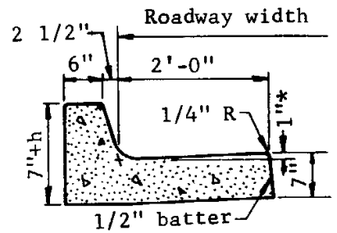

TYPE "A"

For 6" curb height or over

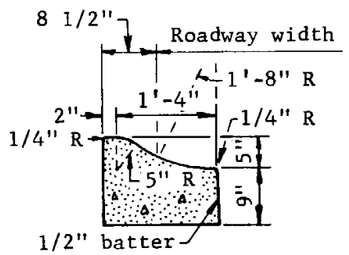

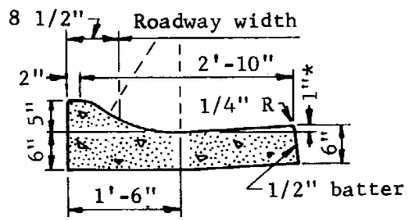

TYPE "E"

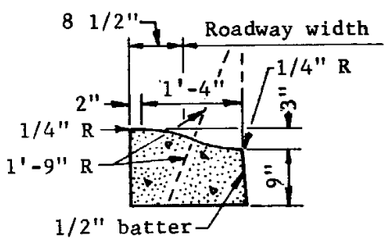

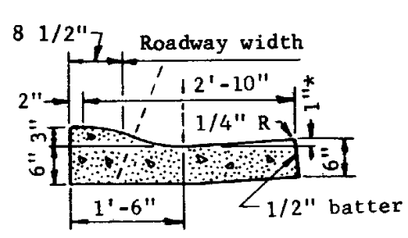

TYPE "F"

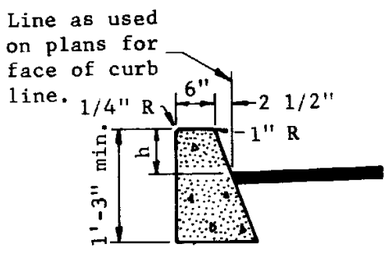

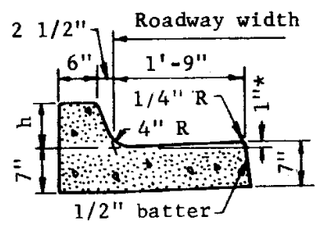

TYPE "G"

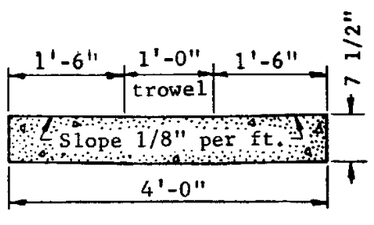

VALLEY GUTTER

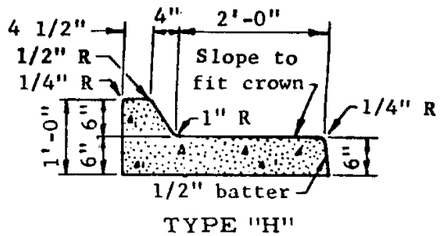

TYPE "H"

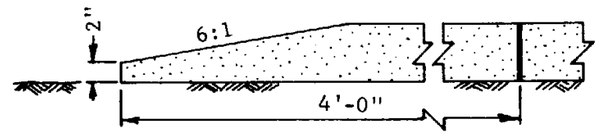

CURB TERMINAL SECTION

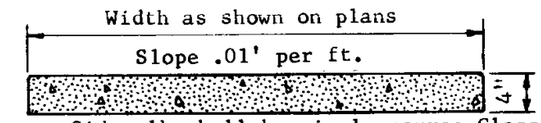

Sidewalk shall be single course Class A concrete, sweat finished and jointed with a 1/4" deep jointing tool at centers approximately equal to the width of the sidewalk.

Sidewalk shall be scored to a depth of 1" at intervals matching the joints in the adjacent curb.

Sidewalk shall be edged with a 1/4" radius edging tool.

CONCRETE SIDEWALK

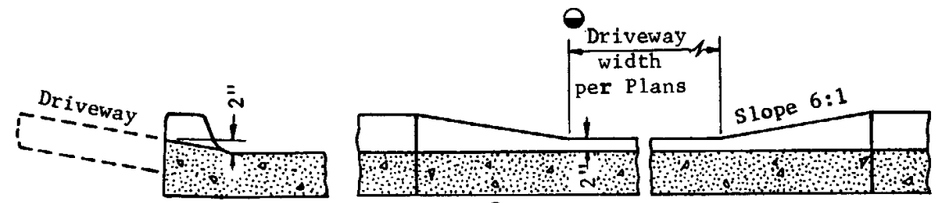

Center joint required if driveway width over 20'

DEPRESSED CURB FOR DRIVEWAY ENTRANCE

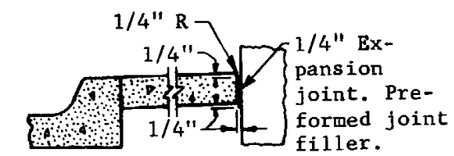

SIDEWALK EXPANSION JOINT

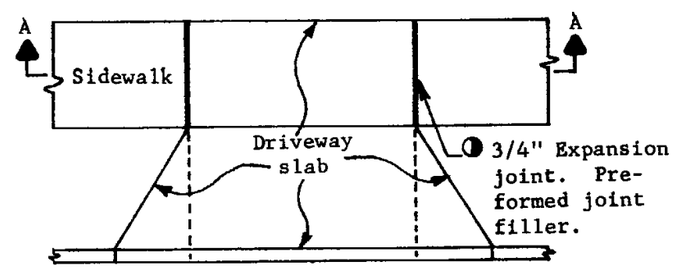

PLAN

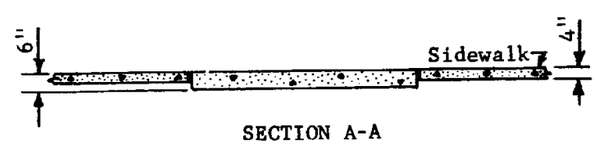

SECTION A-A

Joint is required between driveway slab and adjacent sidewalk.

SIDEWALK AT DRIVEWAY

GENERAL NOTES

All curbs and gutters shall be single course, Class A concrete unless otherwise noted on plans.

All curbs shall be trowel finished.

All gutter flow lines shall be troweled to an accurate grade for a width of 9".

Curbs, or curb and gutter, shall have a 1/4" joint extending all the way through the concrete at locations matching the joints in adjacent P.C.C. pavement; at approximately 15' centers when adjacent pavement is bituminous and at tangent points in curb returns and at structures. The joints may be open or with redwood filler left in place.

* When curb and gutter is located with the roadway section sloping away from the curb, the gutter slope shall match the roadway slope.

ARIZONA HIGHWAY DEPARTMENT
PLANS DIVISION

CURB, GUTTER, SIDEWALK & DRIVEWAY DETAILS

Drawn	O.K.	3-1935	Drawing No.
Traced	R.A.F.	6-8-67	C-5.01
Checked	J.P.O.	JPO 5-68	
Approved Engr. Plans	G Weidecker 5-68		

Rev

NOTE: Shaded area to be constructed & measured as valley gutter. Area(sq.ft.)/4' =lin. ft.

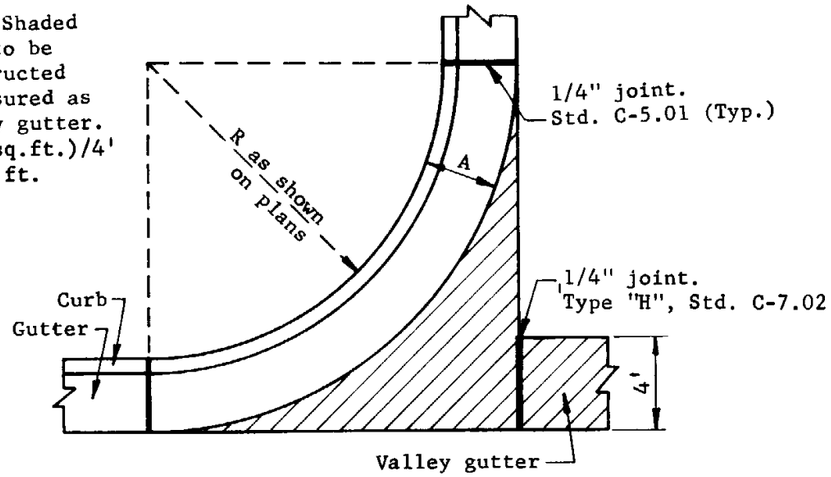

TYPICAL VALLEY GUTTER CONSTRUCTION AT STREET INTERSECTION OR ALLEY

A = Overall curb and gutter width.
d = Drop from point controlled by grade to outside edge of gutter.
F = Total crown from ℄ elev. to gutter grade.
a = Distance from ℄ to inside edge of gutter.
b = Distance from outside edge of gutter to point controlled by grade.
e = Drop from ℄ to inside edge of gutter.

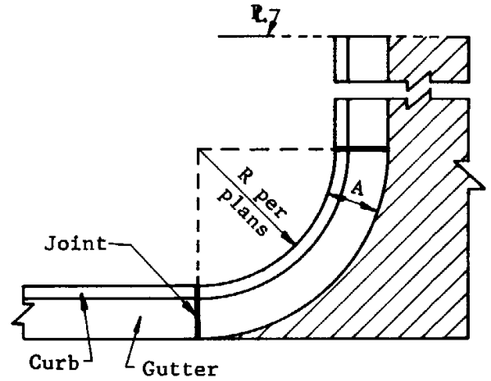

TYPICAL CONCRETE ALLEY OR DRIVEWAY CONSTRUCTION

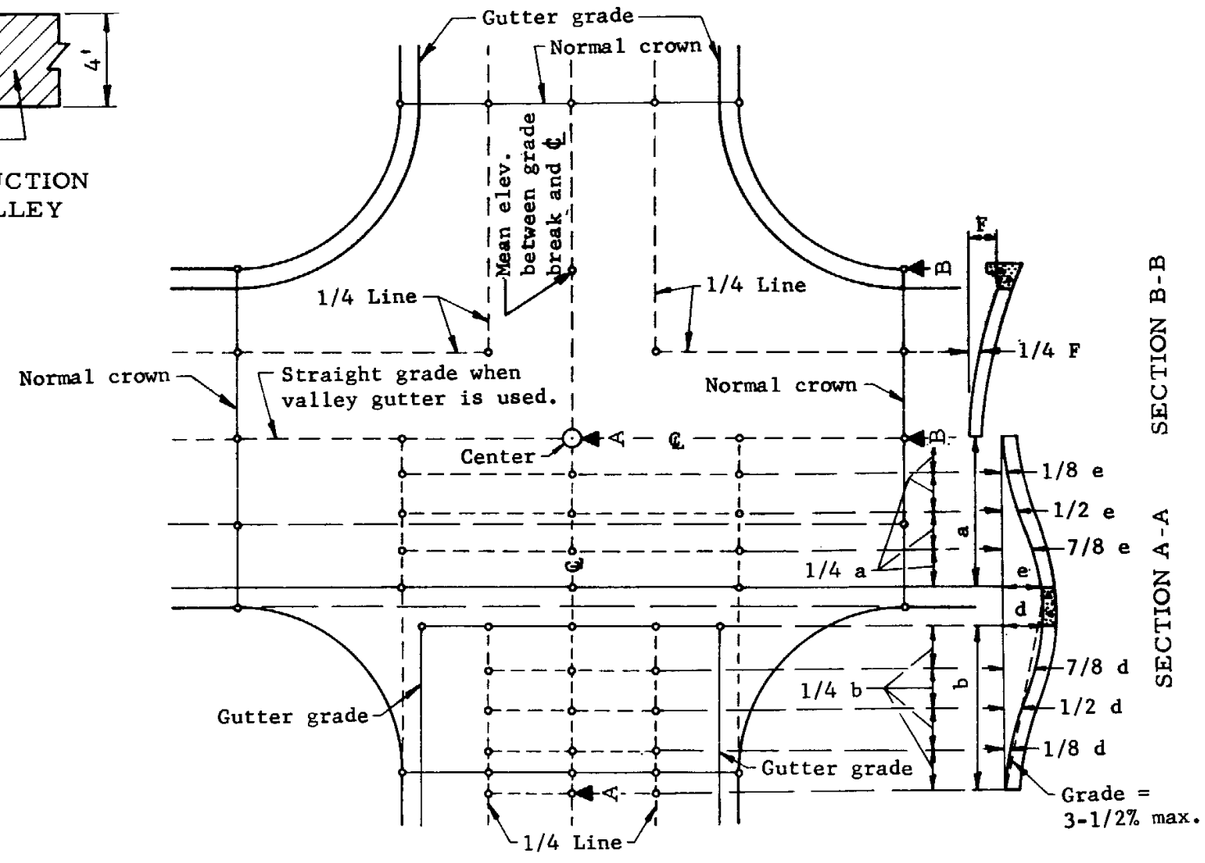

GENERAL NOTES

To determine the value of F, see roadway typical section.

For Curb and Gutter details, see Std. C-5.01.

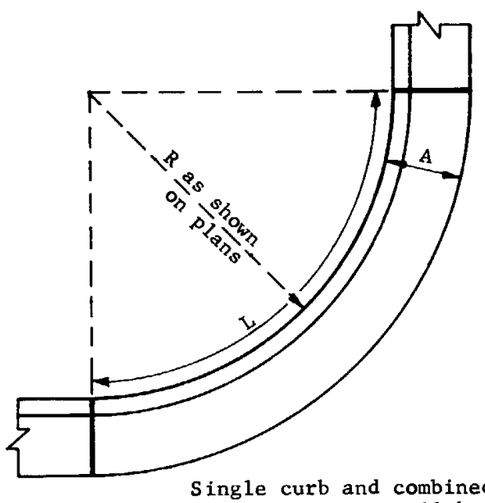

Single curb and combined curb and gutter will be measured along the back of the curb.

CURB & GUTTER MEASUREMENT ON CURVES

FORMULA FOR QUARTER POINTS

S = Sum of intersecting pavement widths. (Distance between gutter grade lines.)

D = Drop from center of intersection to center of return

where	S = 0' to 90',	P = 0.17
"	S = 91' to 100',	P = 0.18
"	S = 101' to 110',	P = 0.19
"	S = 111' to 136',	P = 0.20

PD = Drop from center of intersection to quarter point.

STREET INTERSECTION GRADES

ARIZONA HIGHWAY DEPARTMENT
PLANS DIVISION

CURB & GUTTER MEASUREMENT & STREET INTERSECTION GRADES

Drawn	O.K. & W.M.D.	Drawing No.
Traced	R.A.F. 9-16-66	C-5.02
Checked	J.P.O. JPO 5-68	
Approved Engr. Plans	G Weidecker 5-68	

Rev

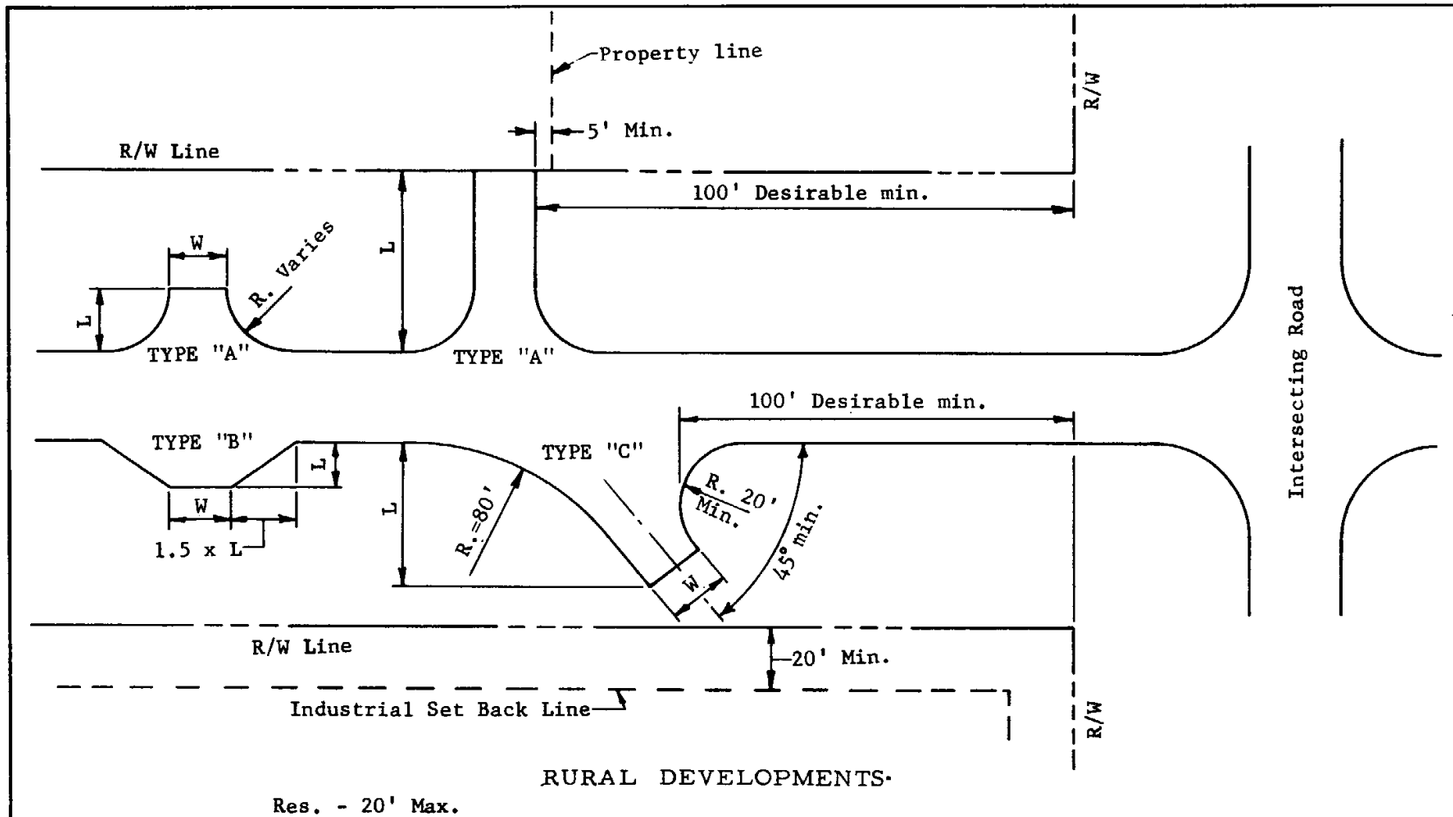

RURAL DEVELOPMENTS

GENERAL NOTES

Paved Turnouts: W=10' Minimum & 40' Maximum.
Plans notation will be W x L, Surface Material, Type & Standard.
Example: 16' x 30' A.C.T.O. Type "A" Standard C-6.01.

Base material shall be the same as that shown for main roadway, unless otherwise noted.

Excavation or Embankment for turnouts shall be included in quantities for main roadway.

Dimensions indicated as minimum shall be avoided wherever possible in favor of those indicated as desirable

Curbed driveways and depressed curbs shall be located as noted on Plans or as directed by the Engineer.

All radii shown are to back of curb.

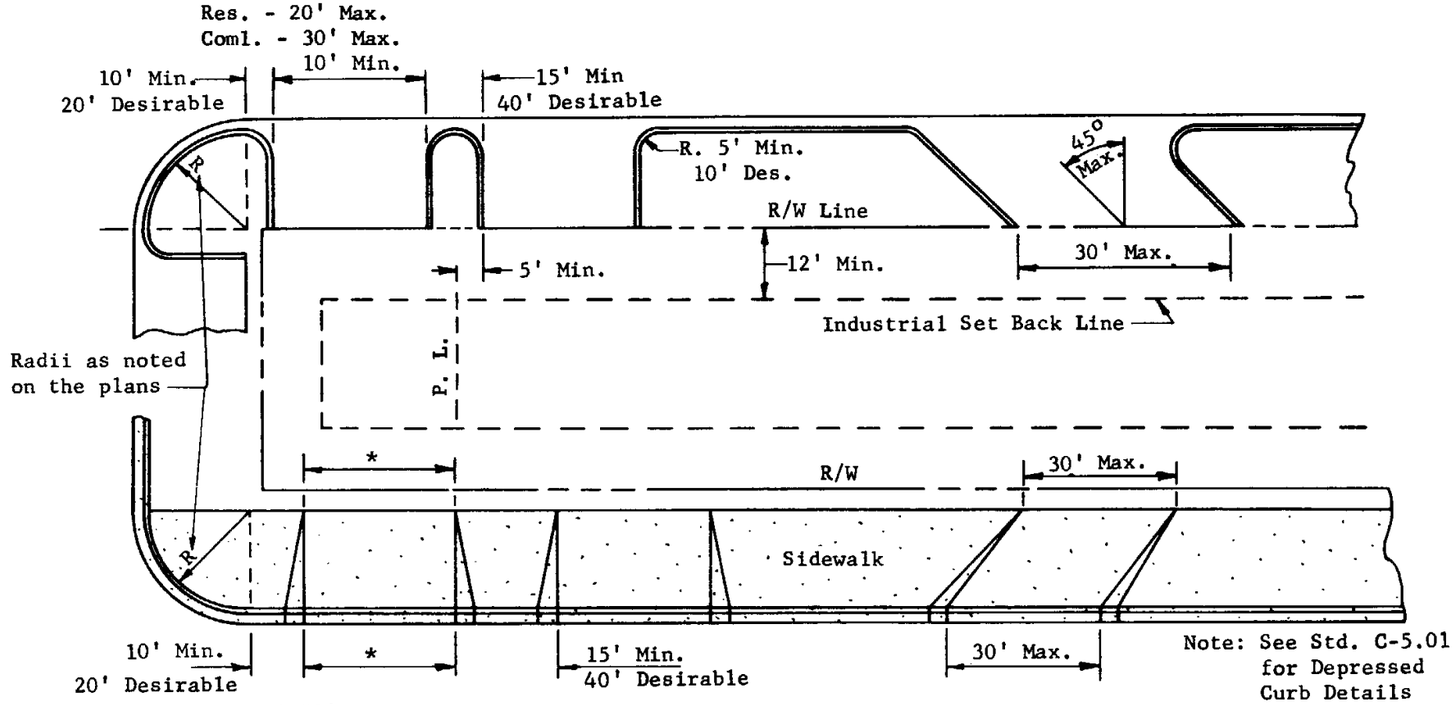

* 30' Max. - One Way, Commercial
40' Max. - Two Way, Commercial

URBAN DEVELOPMENTS

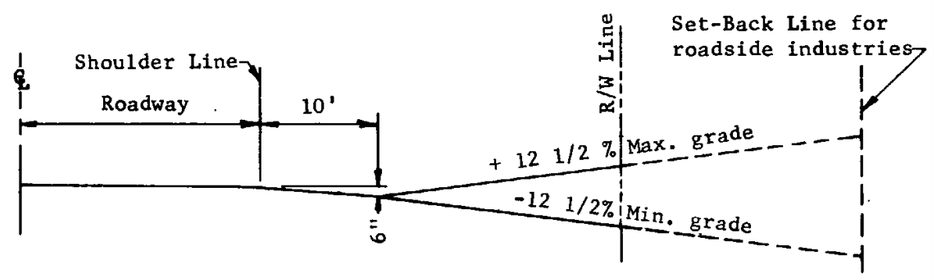

TYPICAL SECTION AT RURAL DRIVEWAY ENTRANCE
See Std. C-5.01 for Depressed Curb Details

ARIZONA HIGHWAY DEPARTMENT PLANS DIVISION			Rev
TURNOUT & DRIVEWAY LAYOUT			
Drawn	L. O. Moe 2-64	Drawing No.	
Traced	R.A.F. 11-18-66	C-6.01	
Checked	J.P.O. JPO 5-68		
Approved Engr. Plans	Hildebrandt 5-68		

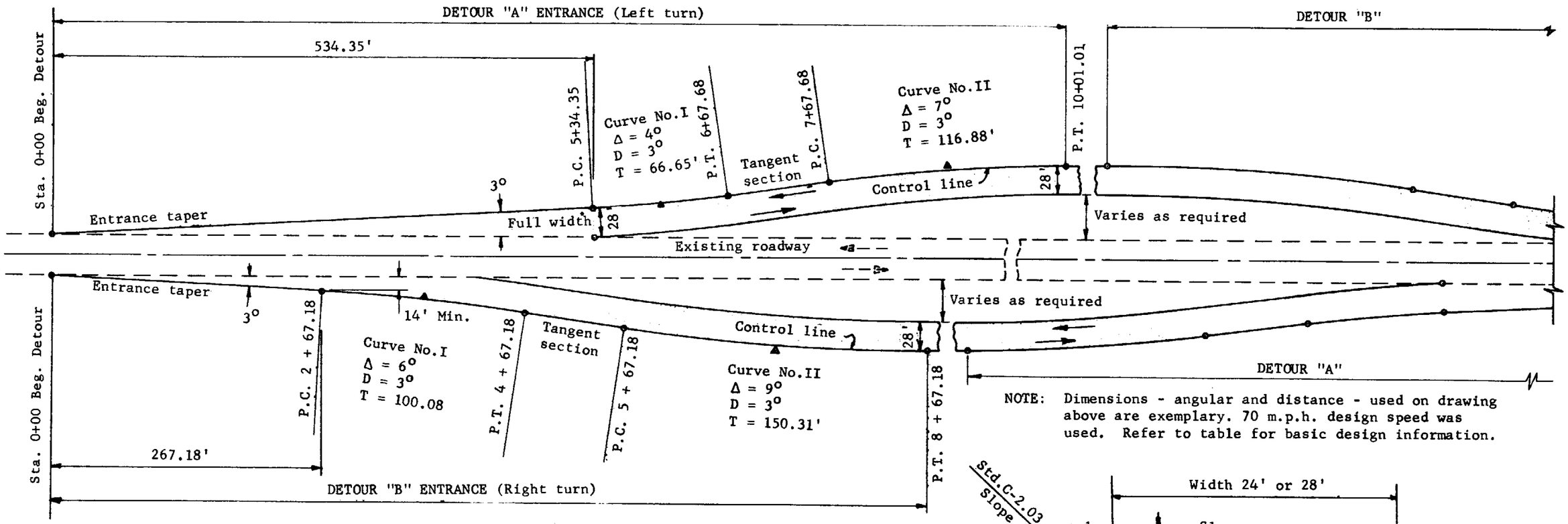

NOTE: Dimensions - angular and distance - used on drawing above are exemplary. 70 m.p.h. design speed was used. Refer to table for basic design information.

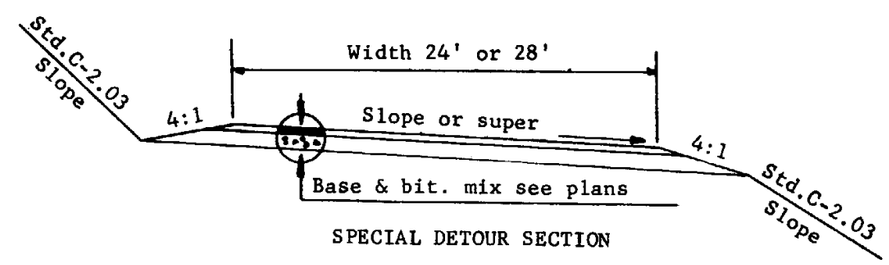

SPECIAL DETOUR SECTION

GENERAL NOTES

Detour "A" entrance shall be used where approaching vehicle must turn left. Detour "B" shall be used where approaching vehicle must turn right.

Detour from a horizontal curve: On the inside of the curve the detour take off shall be a curve, see table. On the outside a tangent take off shall be used. A vertical curve may be required to effect a smooth grade change.

The design speed shall be comparable between vertical and horizontal alignment.

The entrance design speed of a detour shall not be less than the normal posted speed of the existing roadway. The design speed for the remainder of the detour may be 20 m.p.h. less than the normal posted speed.

Any intermediate detour entrance may be designed on the basis of normal posted speed less 20 m.p.h. where visible construction activity has slowed traffic for the preceeding 1/4 mile.

The minimum width of the detour shall be 28' for existing roadways 34' or wider and a minimum of 24' for existing roadways less than 34' in width.

The entrance taper for Detour "A" shall be extended until full detour width is attained. For Detour "B" the entrance taper shall be extended until a minimum of 14' is attained beyond the edge of existing roadway.

Any deviation from this standard must be approved by the Plans Engineer and Traffic Engineer and the Engineer shall submit the alignment and profile of the proposed change for their review.

Tangent Roadway		Curved Roadway			Entrance Design Speed	Max. Horizontal Curvature			
						Curve No. I		Curve No. II	
Entrance Design Speed	Entr.Taper Def'l. Angle	Exist. Horiz. Curve	Detour "A" Take off Curve	Detour "B" Take off Curve		D	Superelev.	D	Superelev.
70	3°	1°	2°	2°30'	70	3°	.05'/ft.	3°	.03'/ft
60	3°	2°	3°	3°30'	60	3°	.02'/ft.	4°	.04'/ft.
50	4°	3°	4°	5°	50	4°	.015'/ft.	6°	.04'/ft.
40	6°	4°	5°	6°	40	6°	.015'/ft.	10°	.04'/ft.
30	10°	5°	6°	7°	30	10°	.015'/ft.	19°	.04'/ft.
		6°	7°	8°					
		7°	8°	9°					
		8°	9°	10°					

ARIZONA HIGHWAY DEPARTMENT
PLANS DIVISION

Rev

DETOUR ENTRANCE DESIGN TABLE

Drawn	J.P.O.	12-64	Drawing No.
Traced	R.A.F.	12-66	
Checked	J.P.O.	5-68	C-6.02
Approved Engr. Plans	G Heidecker	5-68	

S indicates sawed contraction joint
C indicates contraction control joint
CN indicates construction joint
LL indicates Longitudinal joint.
See Std. C-7.02

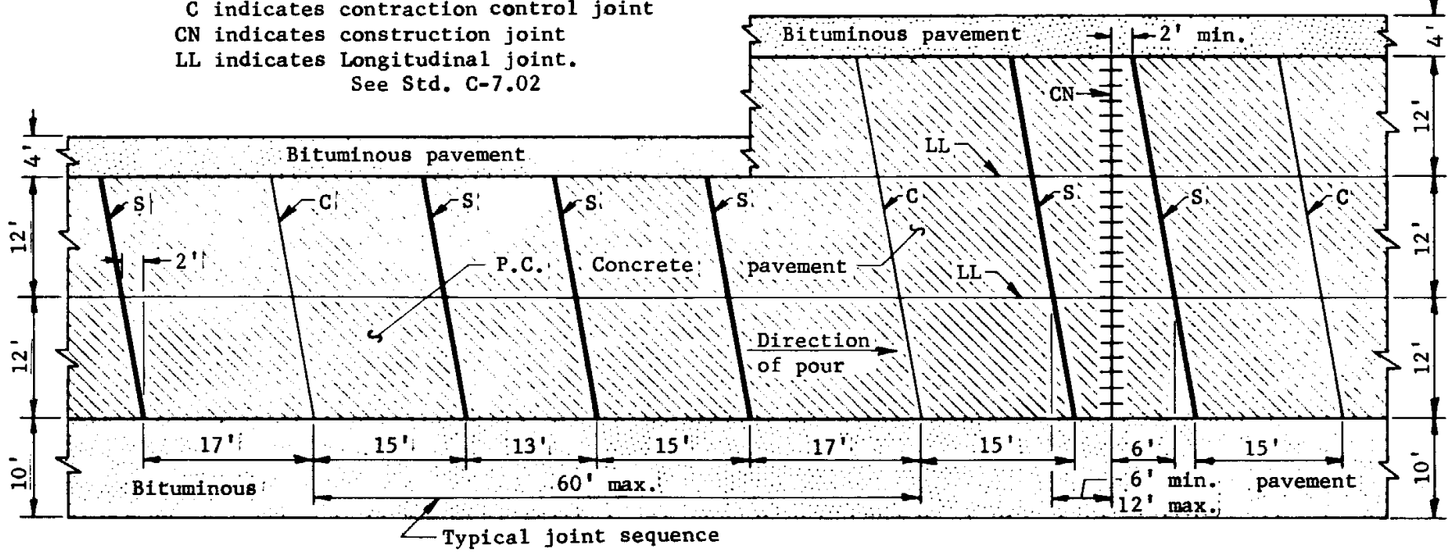

PLAN
See General Notes

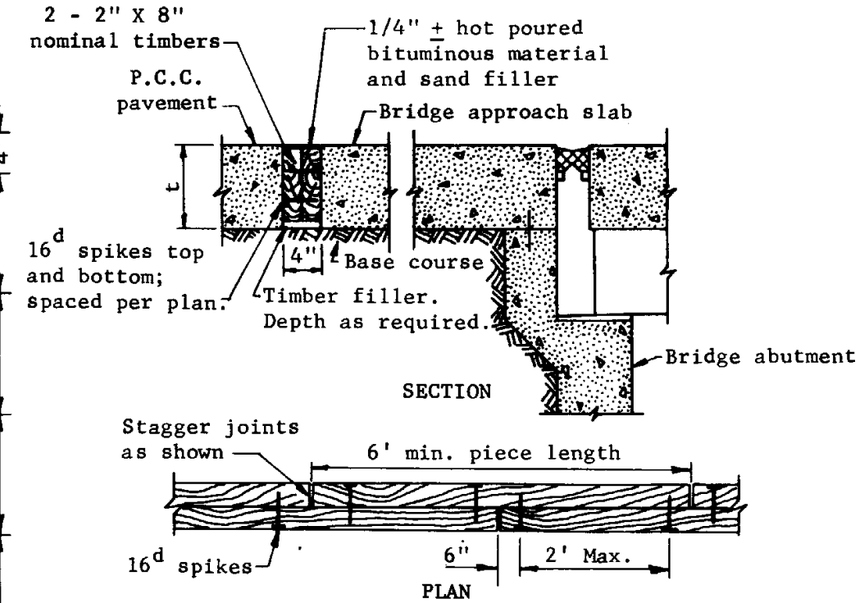

TRANSVERSE EXPANSION JOINT AT BRIDGE APPROACH SLAB

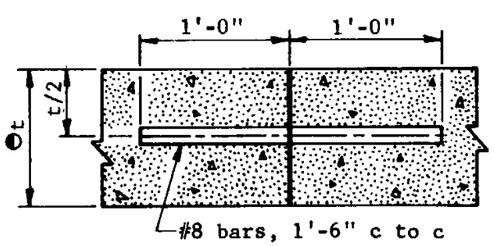

Indicates P.C.C. thickness

CONSTRUCTION JOINT
To be used at end of pour

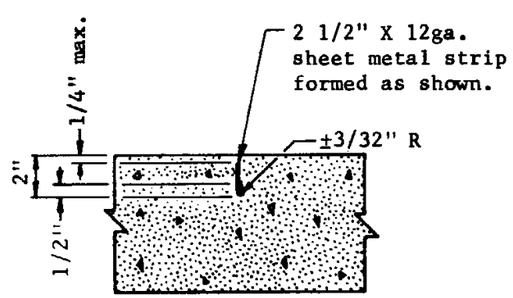

INSERT TYPE CONTROL JOINT

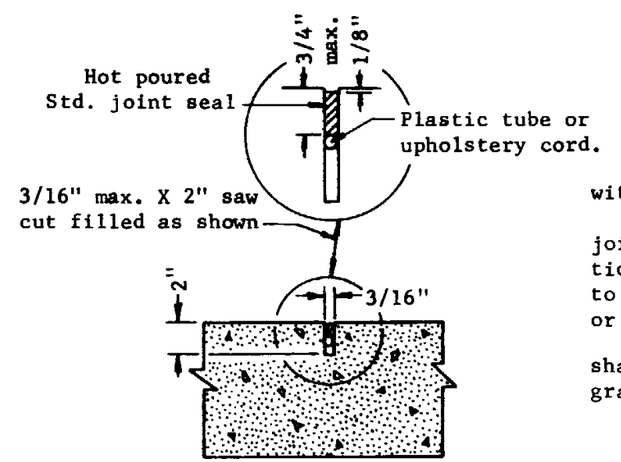

SAWED TYPE CONTROL JOINT

GENERAL NOTES

All transverse joints shall be in line with joints in adjacent slabs.

At intersection of side roads or streets, joints shall be placed to give the intersection a symmetrical appearance while conforming to the cross section of the intersecting road or street.

Timbers used in transverse expansion joint shall be rough redwood and conform to commercial grade.

ARIZONA HIGHWAY DEPARTMENT PLANS DIVISION			Rev
PORTLAND CEMENT CONCRETE PAVEMENT TRANSVERSE JOINTS			
Drawn	L.O.M.	Drawing No.	
Traced	R.A.F. 12-66		
Checked	J.P.O. 5-68	C-7.01	
Approved Engr. Plans			

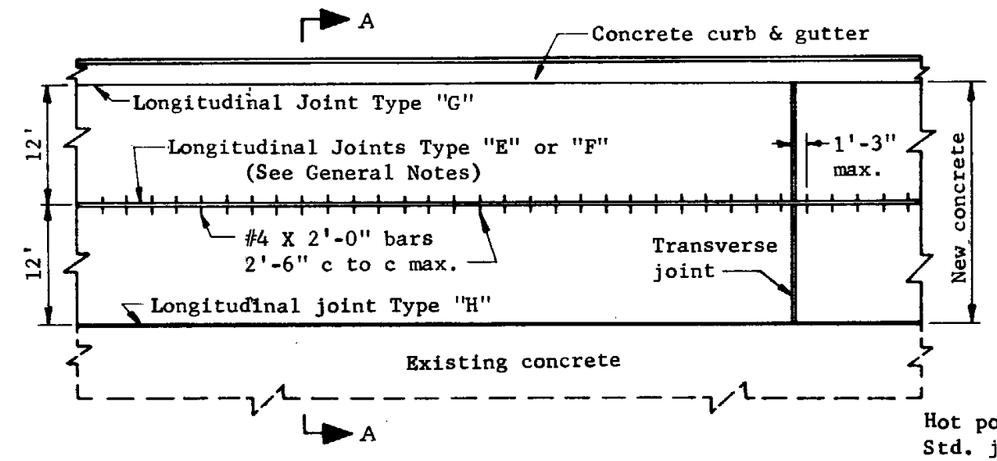

PLAN

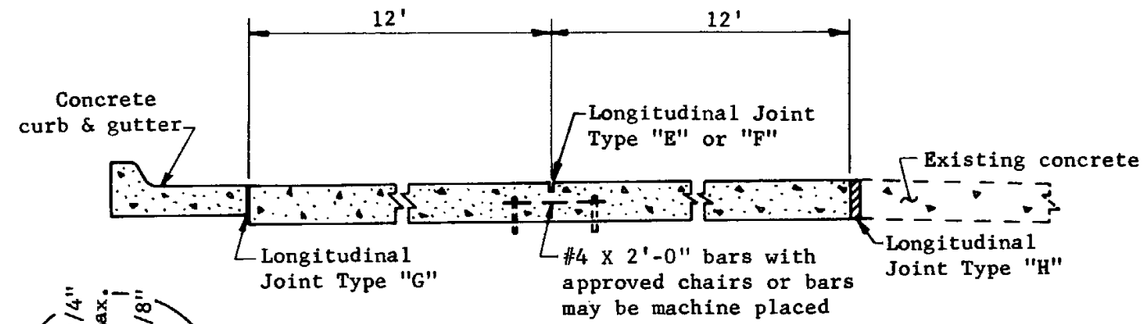

SECTION A-A

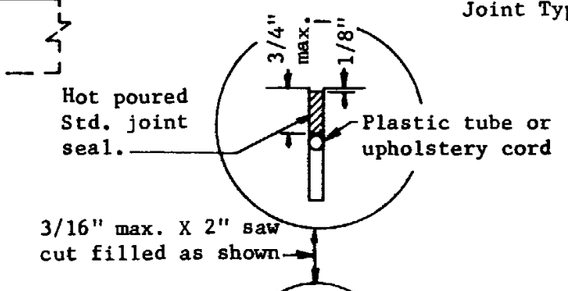

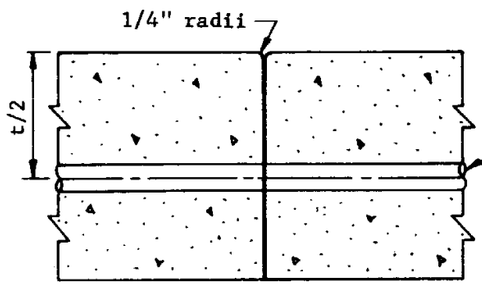

JOINT TYPE "E"

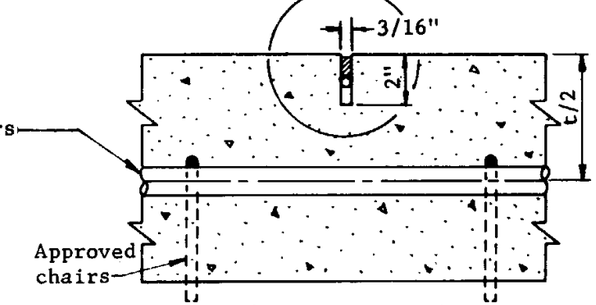

JOINT TYPE "F"

Note:
"t" indicates
pavement thickness

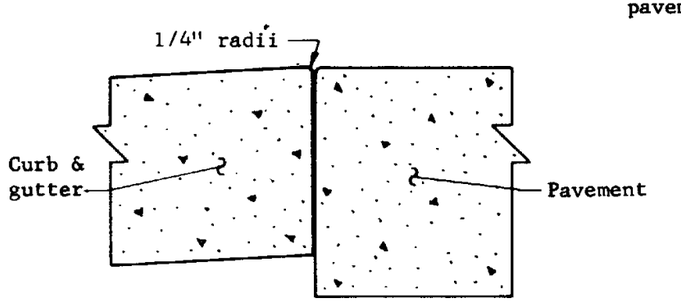

JOINT TYPE "G"

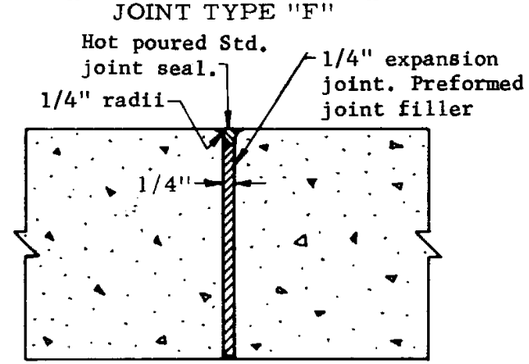

JOINT TYPE "H"

LONGITUDINAL JOINT DETAILS

GENERAL NOTES

All bars used in joints shall be deformed. They shall be held securely in place, parallel to the subgrade and perpendicular to roadway centerline.

All formed longitudinal joints shall be finished with an edging tool not less than 1'-0" wide and 1'-6" long.

In slip form type pavement construction, Longitudinal Joint Type "F" shall be used. In fixed form type construction either Longitudinal Joint Type "E or "F" may be used.

ARIZONA HIGHWAY DEPARTMENT PLANS DIVISION			Rev
PORTLAND CEMENT CONCRETE PAVEMENT LONGITUDINAL JOINTS			
Drawn	O.K.	Drawing No.	
Traced	R.A.F. 12-66		
Checked	J.P.O. JPO 5-68	C-7.02	
Approved Engr. Plans	G Weidecker 5-68		

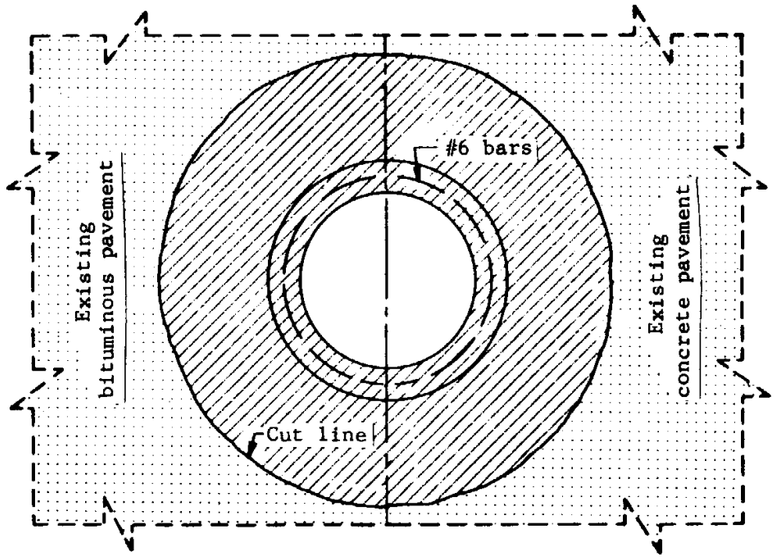

PLAN

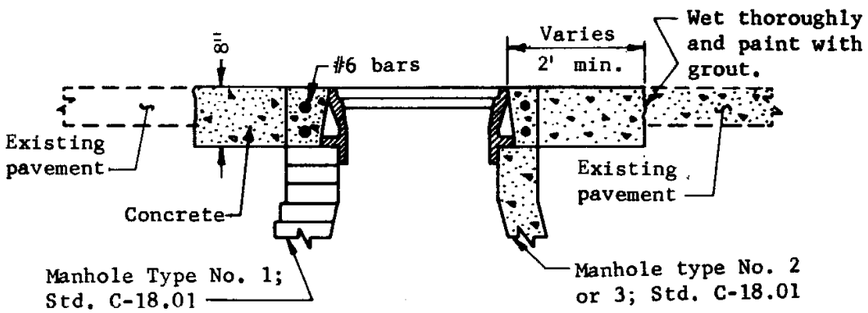

SECTION

PAVEMENT CUT REPLACEMENT FOR MANHOLE

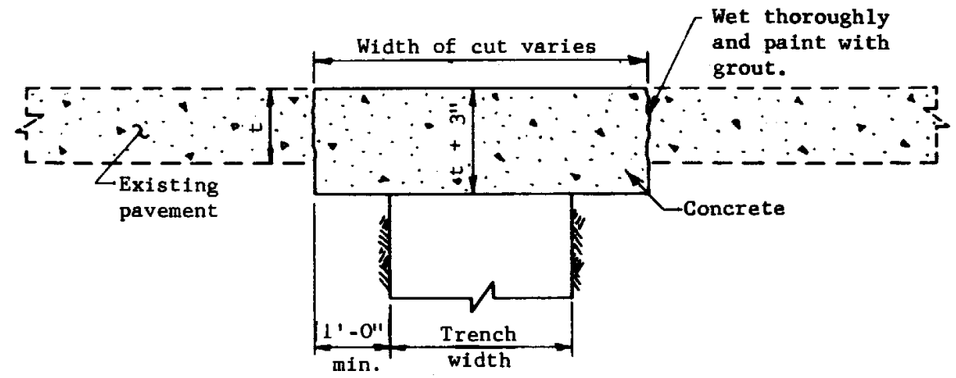

CUT IN CONCRETE PAVEMENT

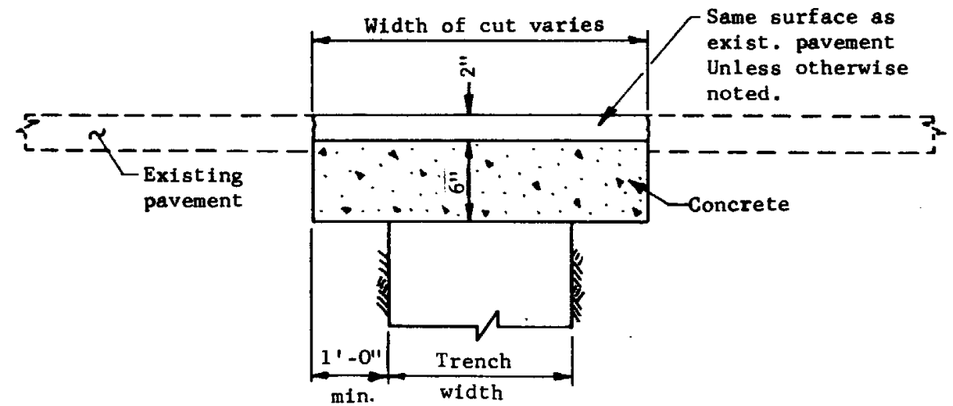

CUT IN BITUMINOUS PAVEMENT

GENERAL NOTES
All concrete shall be Class A.

ARIZONA HIGHWAY DEPARTMENT PLANS DIVISION			Rev
PAVEMENT CUT REPLACEMENT			
Drawn	O.K.	Drawing No.	
Traced	R.A.F. 12-5-66	C-7.03	
Checked	J.P.O. JPO 5-68		
Approved Engr. Plans	G Weidecker 5-68		

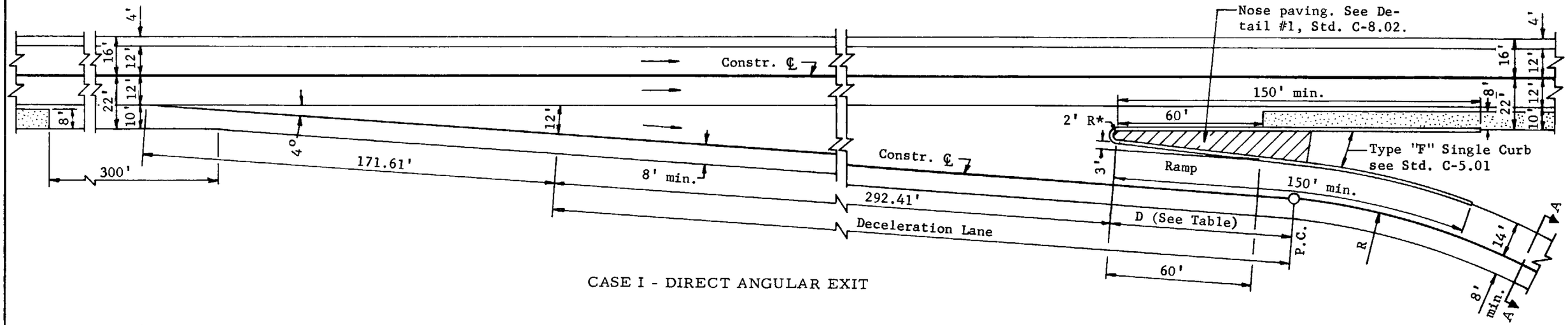

CASE I - DIRECT ANGULAR EXIT

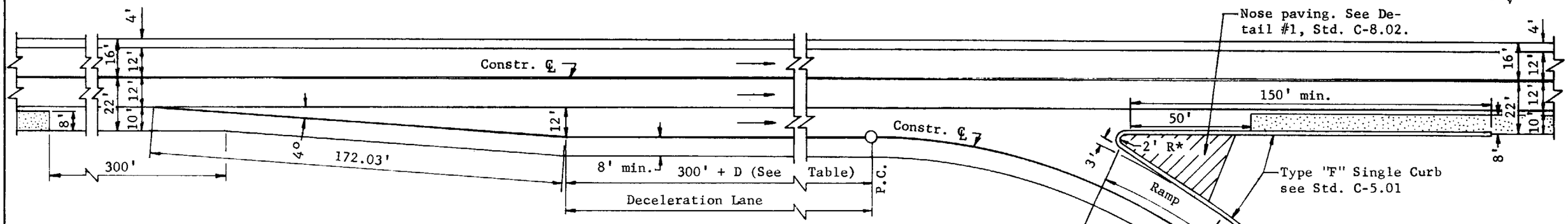

Case II to be used only under special conditions which necessitate ramp curvature ahead of nose.

CASE II - PARALLEL DECELERATION

*Radius shown is to back of curb.

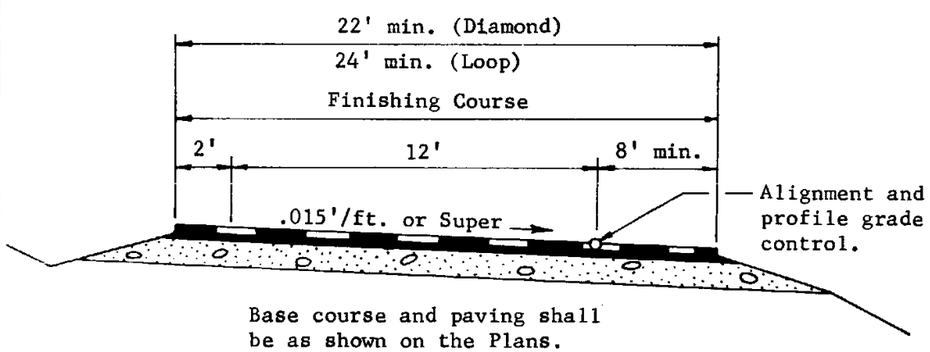

Base course and paving shall be as shown on the Plans.

SECTION A-A

R (Feet)	Min. D (Feet)
Less than 250'	275'
250' - 450'	200'
450' - 1000'	100'
Over 1000'	60'

GENERAL NOTES

Ramp take off from main curved roadway should provide equivalent minimum deceleration control distances.

Shaded areas indicate differential shoulder delineation.

See Pavement Marking Standards for stripe details.

ARIZONA HIGHWAY DEPARTMENT
PLANS DIVISION

Rev

TYPICAL EXIT RAMP TERMINALS

Drawn	C.B.	3-60	Drawing No.
Traced	S.L.T.	8-67	
Checked	J.P.O.	5-68	C-8.01
Approved Engr. Plans			

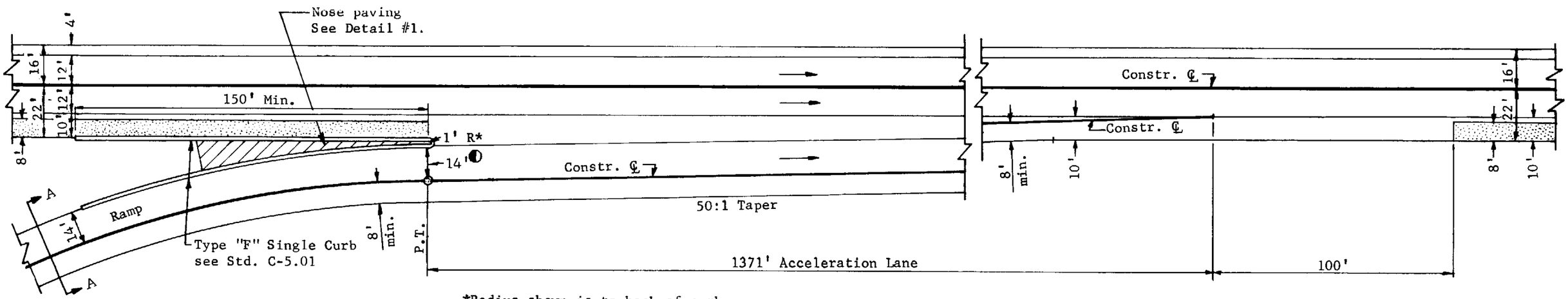

*Radius shown is to back of curb.

GENERAL NOTES

The 50:1 taper and corresponding offsets shall also apply when the main roadway has curvature or combined tangent and curvature.

Shaded areas indicate differential shoulder delineation.

See Pavement Marking Standards for stripe details.

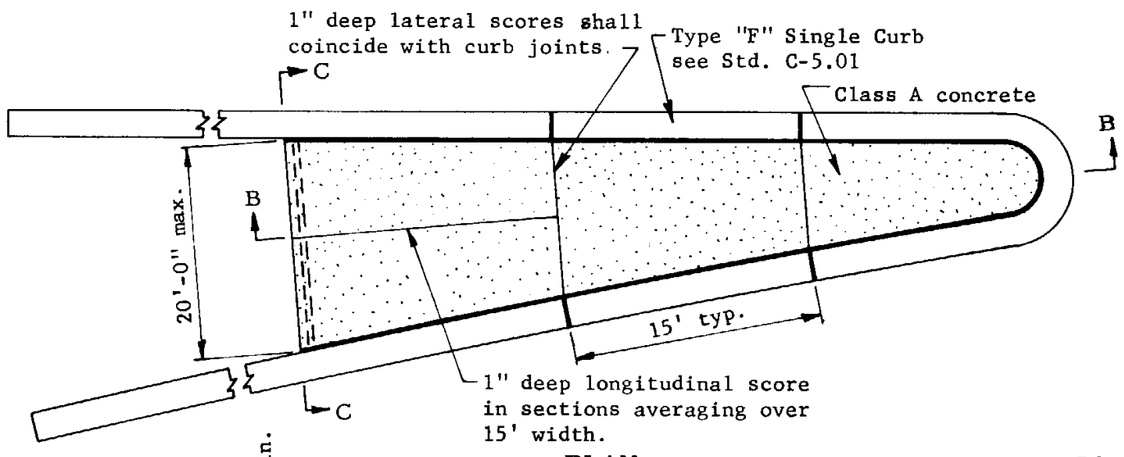

PLAN

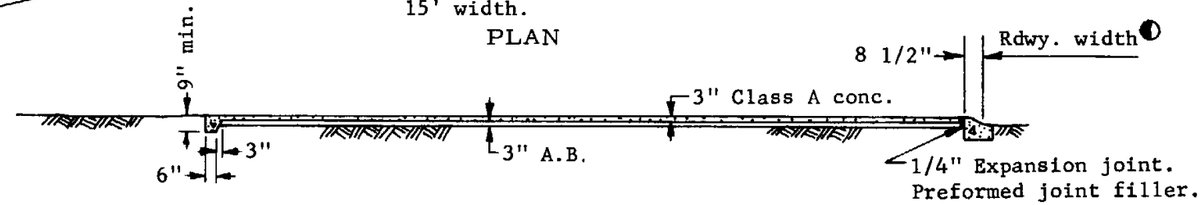

SECTION B-B

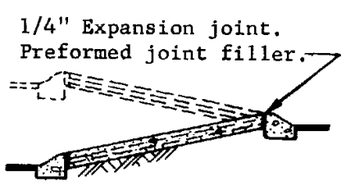

SECTION C-C

NOTE: All joints and scores shall be edged with a 1/4" radius tool.
Extend nose paving to a 20' max. width or 30' in length measured from the nose, but in no case shall the paving extend beyond curb end.

DETAIL #1 - NOSE PAVING

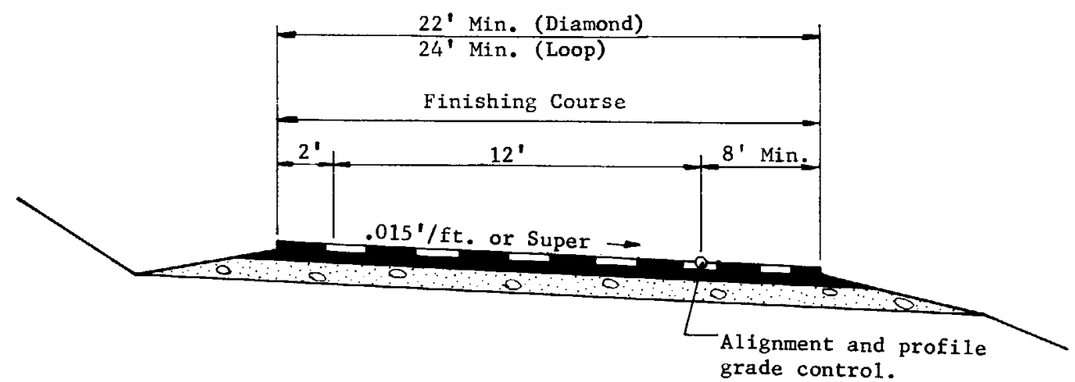

SECTION A-A

Base course and paving shall be as shown on the plans.

ARIZONA HIGHWAY DEPARTMENT PLANS DIVISION			Rev
TYPICAL ENTRANCE RAMP TERMINAL			
Drawn	C.B. 3-60	Drawing No.	
Traced	S.L.T. 8-67		
Checked	J.P.O. JPO 5-68	C-8.02	
Approved Engr. Plans	H Heidecker 5-68		

M8-1

The M8-1 delineator is used as a guide marker for through roadway alignment, and is placed as follows:

1. For interstate roadways and other roadways that meet freeway standards, the M8-1 delineators are placed continuously on the right side except where fixed source lighting is in operation and where left-side placement is necessary to clearly show the alignment.

2. For roadways that do not meet freeway standards, the M8-1 delineators are placed continuously on the right side except (a) where fixed source lighting is in operation, (b) along areas used for pull-offs or parking, or (c) on hazardous right-hand curves where the delineators are placed on the left. Delineators are bi-directional when applied on the left side of hazardous right-hand curves on two-way roadways.

3. M8-1 delineators are placed on through roadways at interchanges regardless of fixed source lighting. The crossroad through an interchange is normally delineated within the limits of the right-of-way at rural interchanges and grade separations.

4. When an M8-1 delineator falls within a crossroad, driveway, parking area, etc., it is moved in either direction a distance not to exceed one quarter of the normal spacing. If proper placement still cannot be obtained, the delineator is eliminated. M8-1 delineators are not located closer than one-quarter of the normal spacing before or beyond a hazard marker or milepost marker.

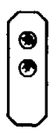

M8-2

The M8-2 delineator is used as a guide marker for the alignment of acceleration and deceleration lanes and for entrance and exit ramps. It is used at all interchanges regardless of fixed source lighting and is placed as follows:

1. The M8-2 delineators are placed continuously on the right side of tangent and left-curving ramps and speed-change lanes. On right-hand curves they are placed on the left side.

2. On curves, the delineator spacing may be adjusted slightly so that a delineator falls on the P. C. and P. T. of the curve.

M9-1L M9-1R

The M9-1 bridge marker is used to mark the ends of narrow bridges. The marker is placed on each side of both ends of bridges located on two-way roadways, and on each side of the approach end of bridges located on one-way roadways.

M9-2

The M9-2 pipe culvert marker may be used to mark the ends of pipes which require periodic maintenance except that they are not installed in the medians of divided highways.

M9-3H

The M9-3H hazard marker is used to mark obstructions that are located within the roadway, such as exit terminal noses and channelization islands.

M9-3V

The M9-3V hazard marker is mounted on or immediately in front of obstructions that are located within 2 feet of the pavement edge. These markers are not placed behind guardrail or embankment curb or within a line of M8-2 delineators.

M9-5

The M9-5 milepost marker is placed on the right side of the roadway. If it cannot be placed within 0.01 mile accuracy, it is omitted.

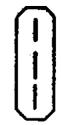

M9-6(1)

The M9-6(1) striping marker is used to mark the end of no-passing zones.

M9-6(2)

The M9-6(2) striping marker is used to mark the beginning of pavement striping at no-passing zones in effect for one direction of travel only.

M9-6(3)

The M9-6(3) striping marker is used to mark the beginning of pavement striping at no-passing zones in effect for both directions of travel.

M9-9

The M9-9 hazard marker is used to mark extreme hazards located within the roadway, such as transitions from two-way roadways to divided roadways, or at dead-end locations.

ARIZONA HIGHWAY DEPARTMENT
PLANS DIVISION

Rev

DELINEATOR USAGE

Drawn	T.E.D. 4-68	Drawing No.
Traced	T.E.D. 4-68	
Checked	J.P.O. JPO 4-68	C-9.01
Approved Engr. Plans	D. Heidenberg 4-68	

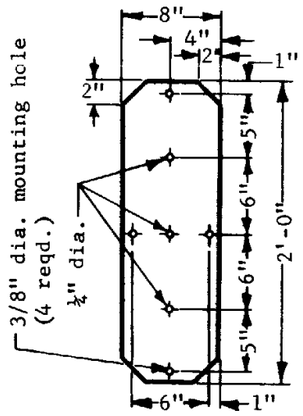

Back Plate

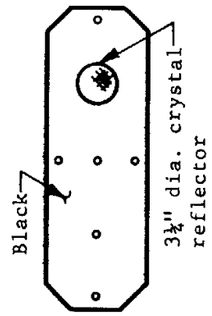

M8-1

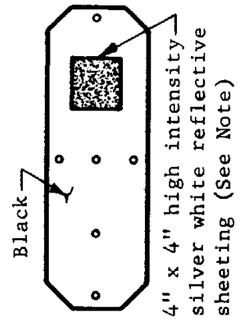

Alternate M8-1

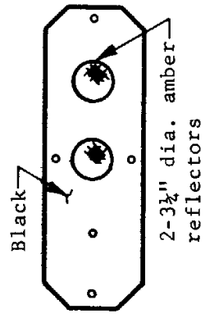

M8-2

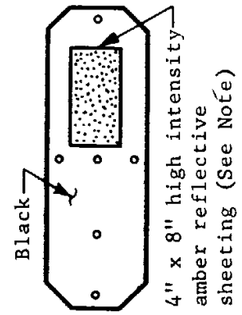

Alternate M8-2

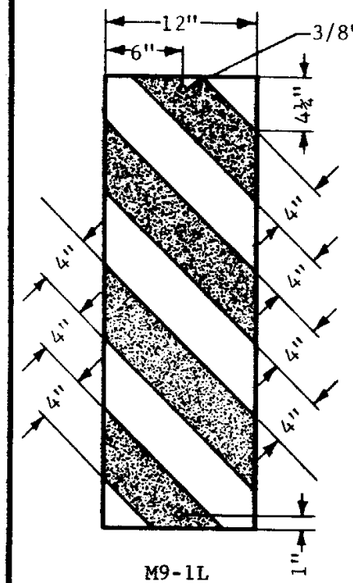

M9-1L

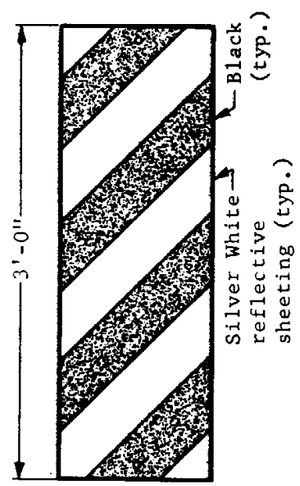

M9-1R

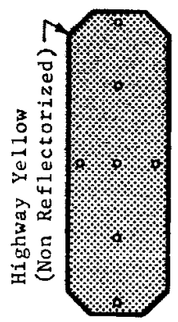

M9-2

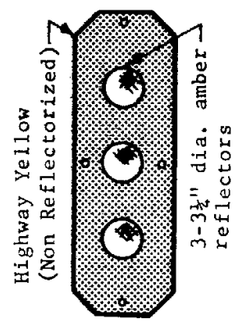

M9-3V & M9-3H
(M9-3V Shown)

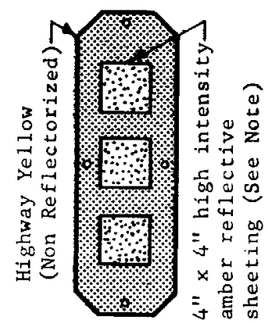

Alternate
M9-3V & M9-3H

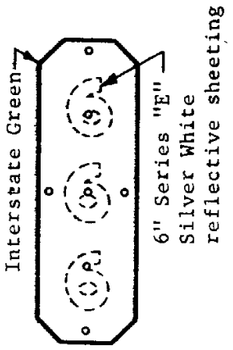

M9-5
MILEPOST

NOTES:

All delineator plates, hazard-marker plates, milepost plates, striping-marker plates, and pipe-culvert marker plates shall be constructed from either 16 ga. steel or 6061-T6-.063 aluminum sheet. The M9-1R and M9-1L hazard marker plates may be constructed from sign-grade plywood.

The 16 ga. steel plates shall be painted with one coat of 1A or 1B primer, both sides, and one coat of industrial synthetic black, Interstate green, or highway yellow enamel, both sides, as specified, or shall be a minimum spangle hot-dipped galvanized, Federal Spec. QQ-S-775A and primed with a corrosion inhibiting primer and final coat black, Interstate green, or highway yellow enamel Federal Spec. TT-E-489C Class B or equal.

The 6061-T6 aluminum sheets shall be etched by approved methods and then primed with 1D primer, both sides. Final coat, both sides, shall be industrial synthetic black, Interstate green, or highway yellow as specified.

Stripes for the striping markers shall be painted with industrial synthetic white enamel paint conforming to Federal Spec. TT-E-489C Class B or equal.

Amber and crystal reflectors shall be plastic, prismatic, center-mounted devices mounted with 3/16" dia. corrosion resistant fasteners, or high-intensity, weather-resistant reflective sheeting applied directly to the back plate. Reflective sheeting for M9-1 hazard markers shall be silver-white, weather-resistant reflective sheeting. All reflective devices shall conform to the A.H.D. Standard Specifications.

Where back plates are furnished with the reflective sheeting type reflector, the reflector mounting holes shall not be provided.

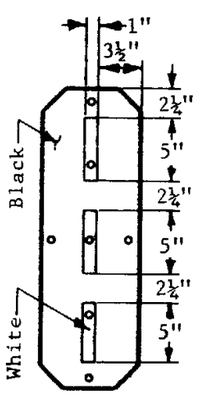

M9-6(1)

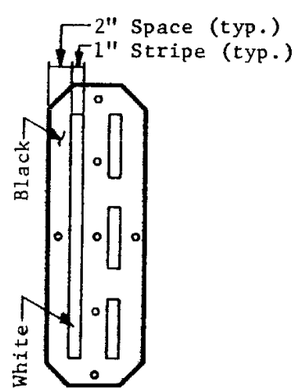

M9-6(2)

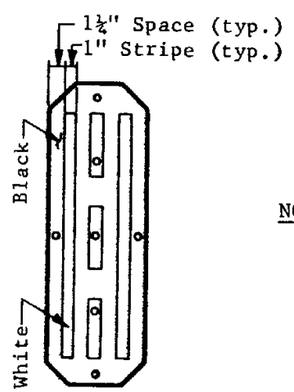

M9-6(3)

NO SCALE

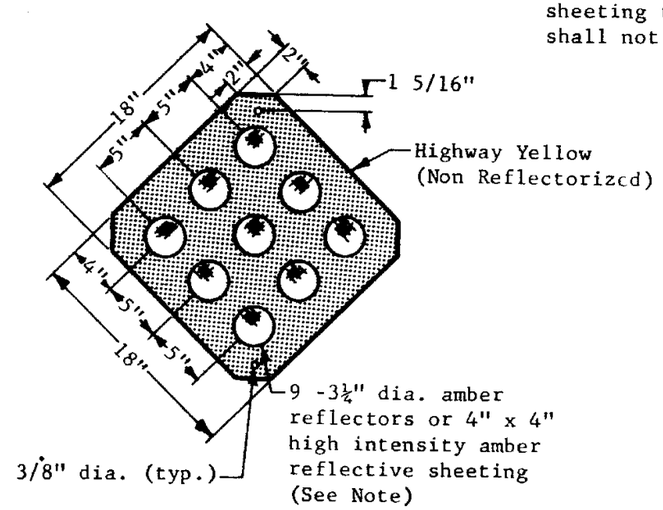

M9-9

ARIZONA HIGHWAY DEPARTMENT
PLANS DIVISION

DELINEATOR FACE PLATE DETAILS

Drawn	T.E.D. 4-68	Drawing No.
Traced	T.E.D. 4-68	C-9.02
Checked	J.P.O. JPO 4-68	
Approved Engr. Plans	D. Heidecker 4-68	

Rev

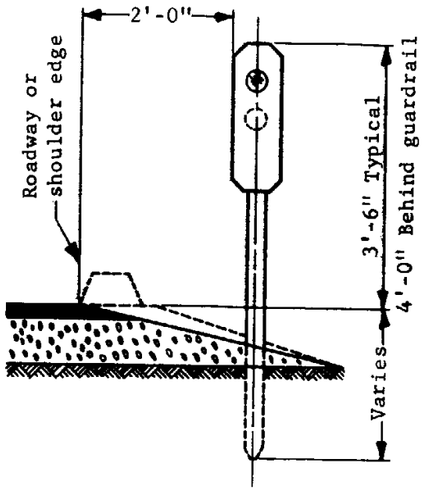

M8-1 AND M8-2 DELINEATORS

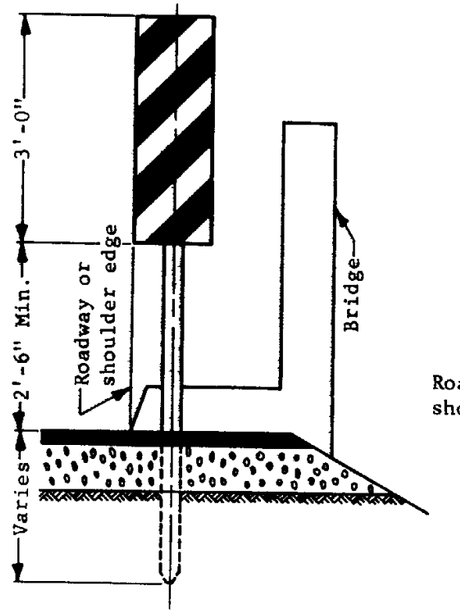

M9-1 HAZARD MARKER

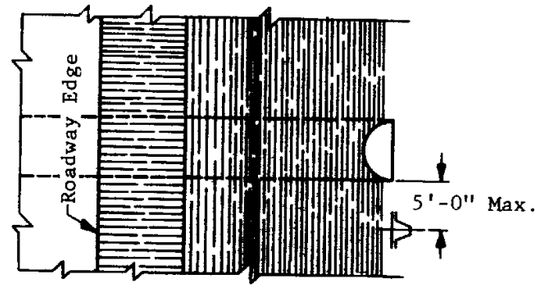

PLAN VIEW

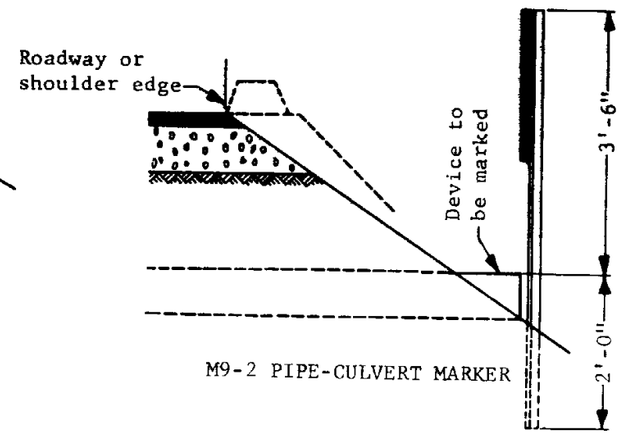

M9-2 PIPE-CULVERT MARKER

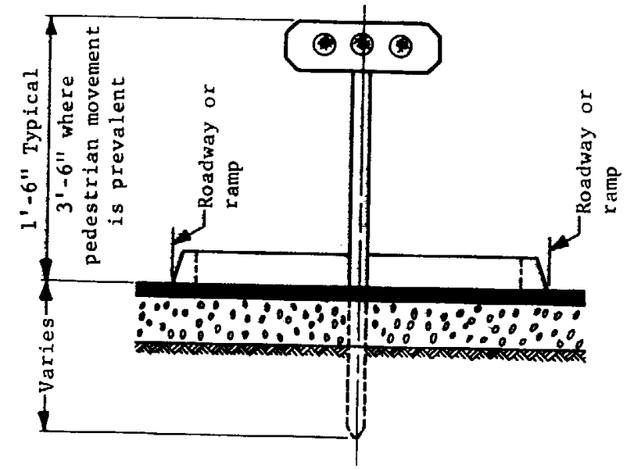

M9-3H HAZARD MARKER

NO SCALE

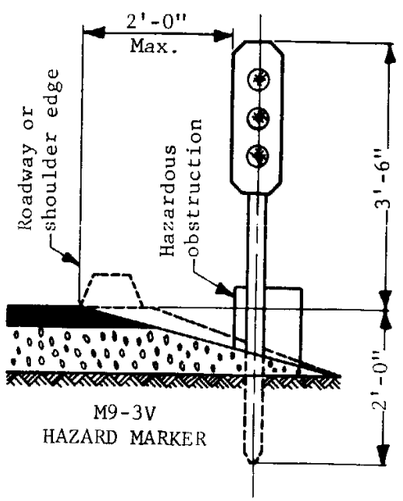

M9-3V
HAZARD MARKER

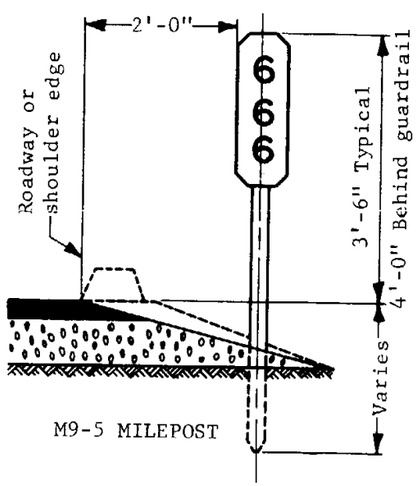

M9-5 MILEPOST

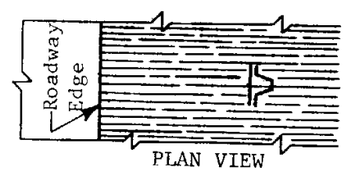

PLAN VIEW

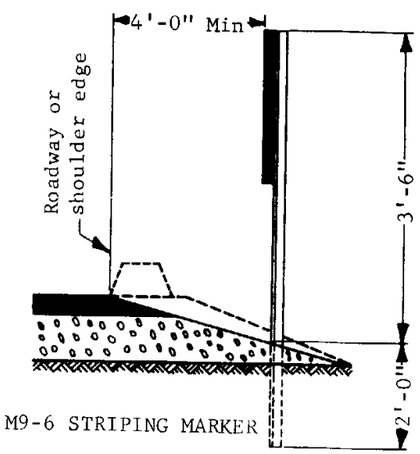

M9-6 STRIPING MARKER

NOTES:

Delineator, hazard-marker and mile-post plates are installed perpendicular to the roadway.

Pipe-culvert marker and striping-marker plates are oriented parallel to the roadway.

Striping markers are placed as far as practicable from the roadway edge.

The inside edge of M9-3V, M9-1L and M9-1R hazard markers is placed in line with the inside edge of the obstruction.

ARIZONA HIGHWAY DEPARTMENT PLANS DIVISION			Rev
DELINEATOR PLACEMENT			
Drawn	T.E.D. 4-68	Drawing No.	
Traced	T.E.D. 4-68	C-9.03	
Checked	J.P.O. JPO 4-68		
Approved Engr. Plans	D. Heidecker 4-68		

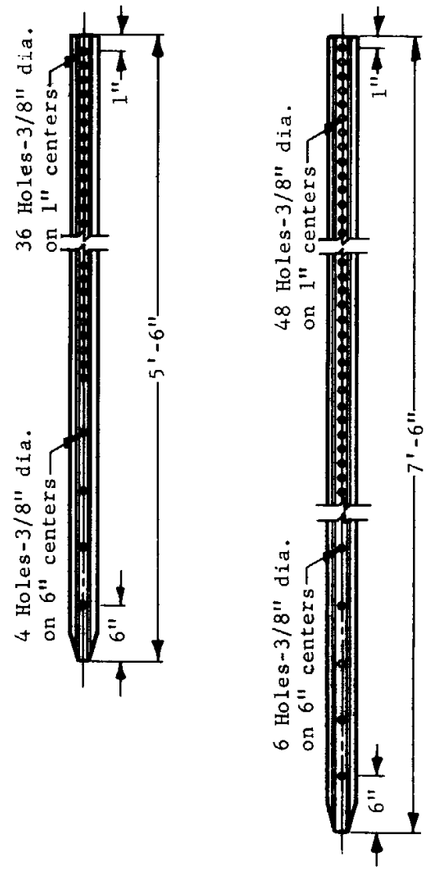

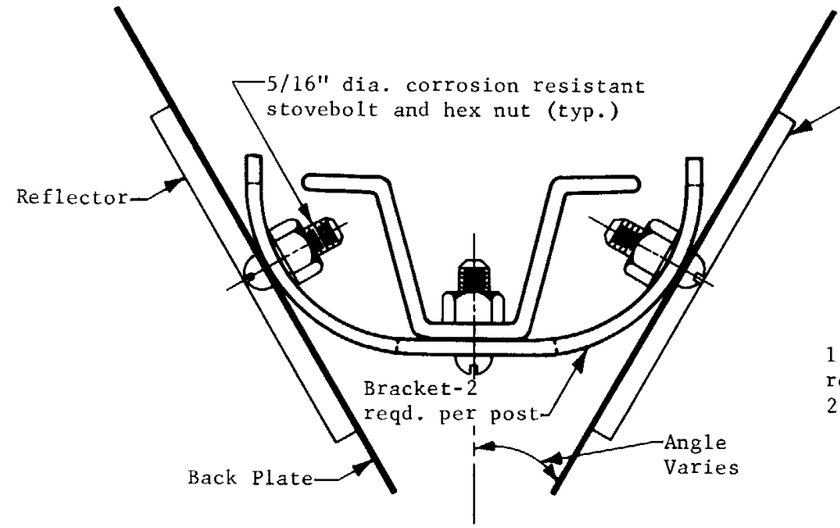

BI-DIRECTIONAL DELINEATOR MOUNTING

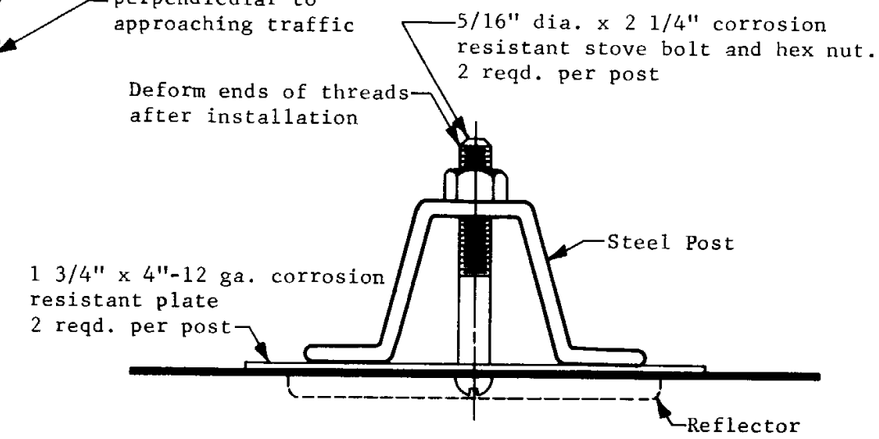

TYPICAL MOUNTING DETAILS

NOTES:

Steel posts shall conform to ASTM-A-499 and shall not weigh less than 1.9 lbs. per foot.

Steel posts and bi-directional delineator bracket shall be galvanized to conform to ASTM-A-123.

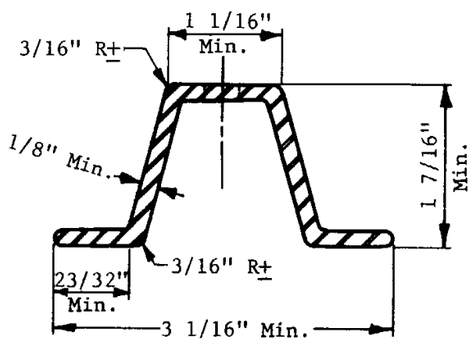

STEEL POSTS

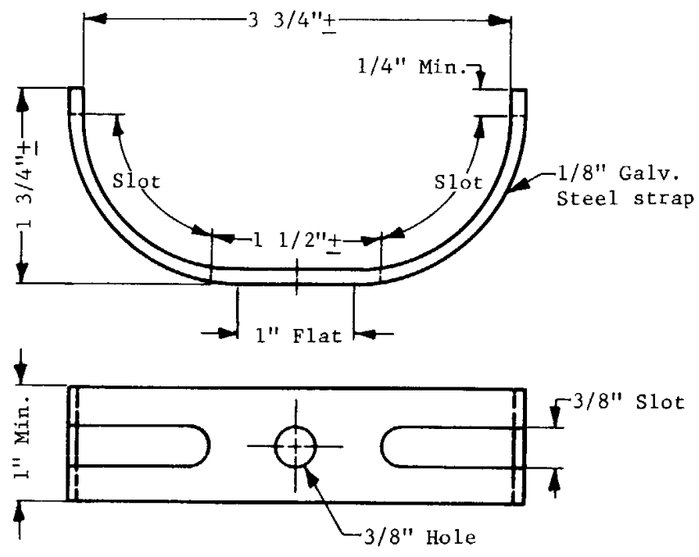

BI-DIRECTIONAL BRACKET DETAILS

NO SCALE

ARIZONA HIGHWAY DEPARTMENT PLANS DIVISION			Rev
DELINEATOR POST AND MOUNTING DETAILS			
Drawn	T.E.D. 4-68	Drawing No.	
Traced	T.E.D. 4-68	C-9.04	
Checked	J.P.O. JPO 4-68		
Approved Engr. Plans	D. Heidecker 4-68		

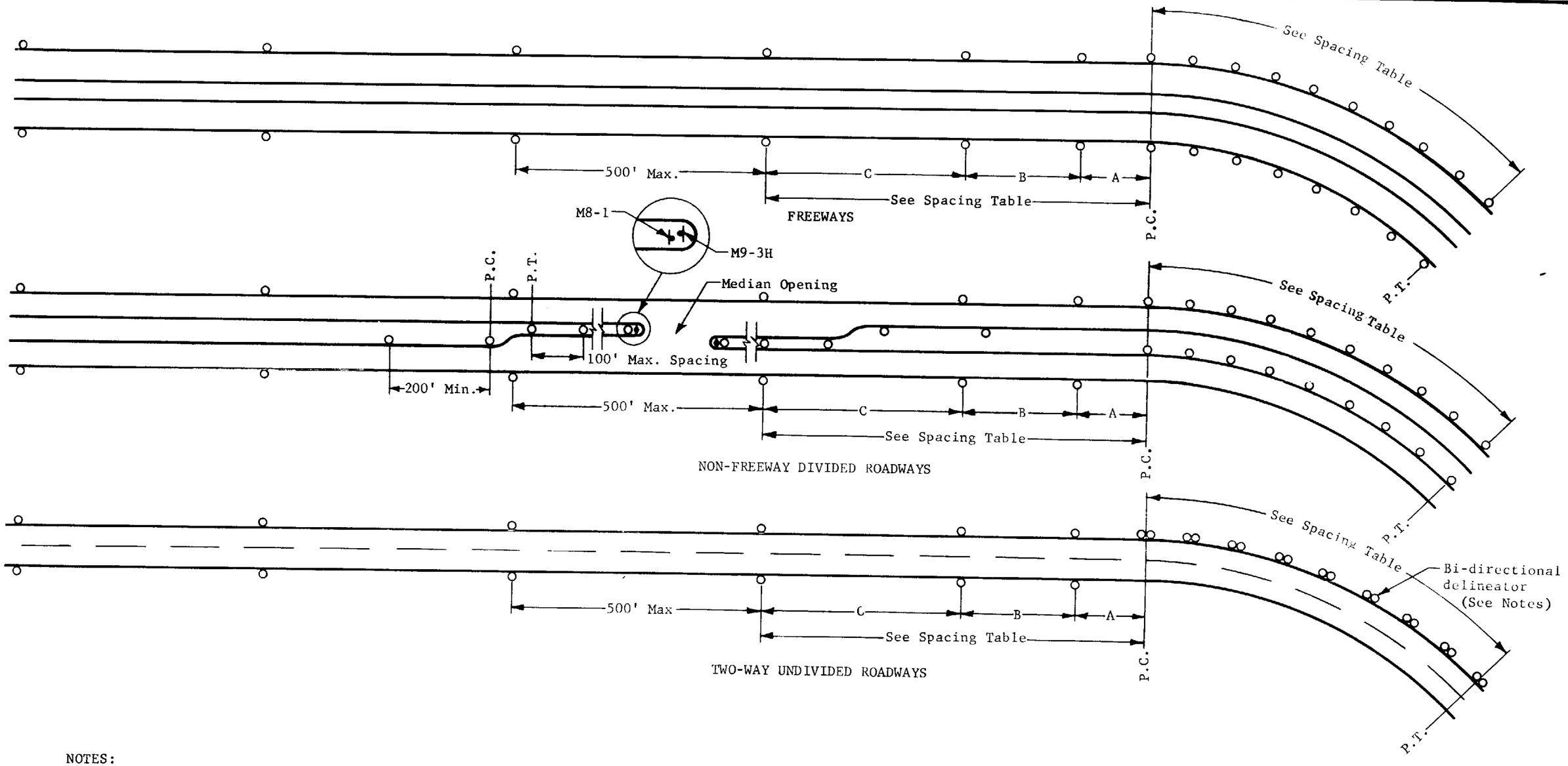

NOTES:

1. M8-1 delineators are placed on the left side at hazardous right-turning curves on two-way undivided and non-freeway divided roads. They are bi-directional, visible from opposite directions, only on two-way undivided roadways.
2. The M8-1 and M9-3H markers at median openings with left-turn lanes may be mounted together on a single post when terminal width is 4'-0" or less.
3. Undivided two-way roadways having four or more traffic lanes should be delineated continuously on both sides.

NO SCALE

LEGEND

○ M8-1

◆ M9-3H

ARIZONA HIGHWAY DEPARTMENT
PLANS DIVISION

DELINEATOR MAINLINE SPACING

Drawn	T.E.D. 4-68	Drawing No.
Traced	T.E.D. 4-68	
Checked	J.P.O. JPO 4-68	C-9.05
Approved Engr. Plans	L. Heidecker 4-68	

Rev

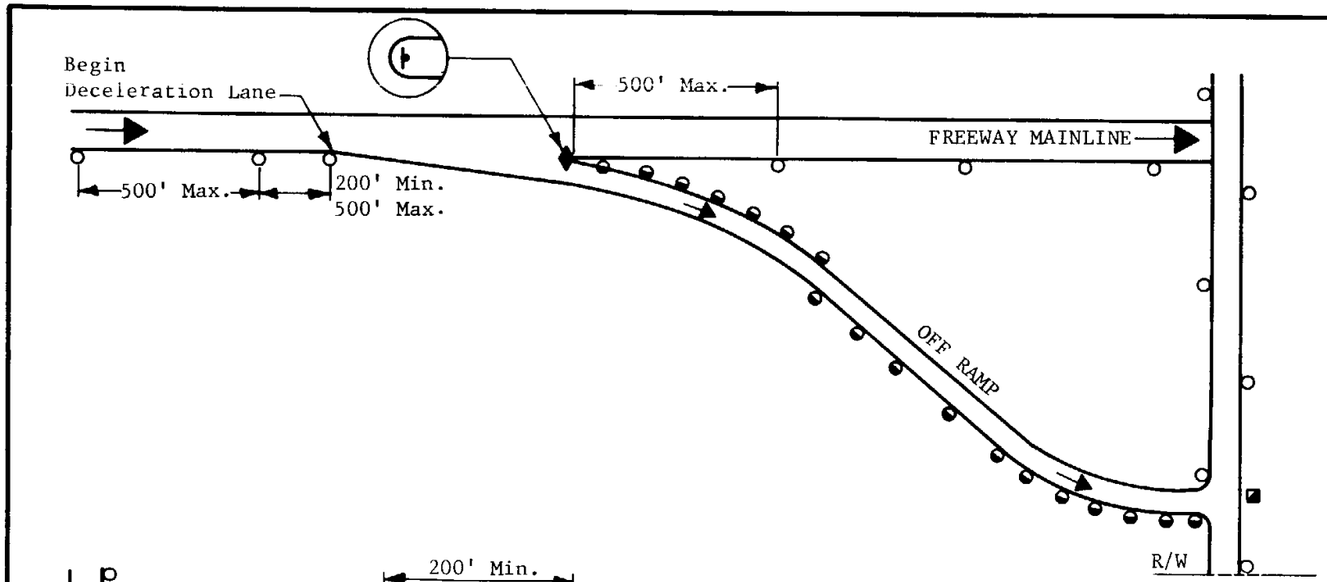

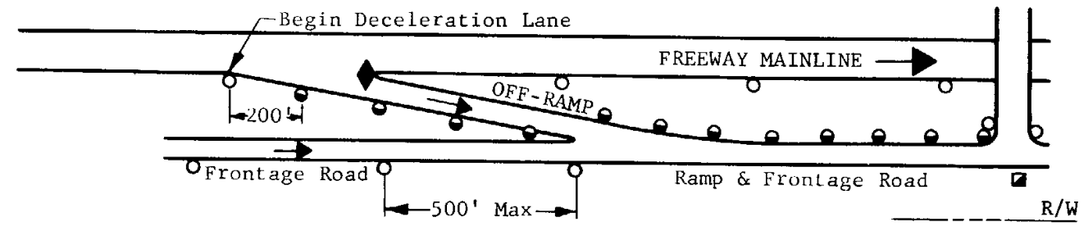

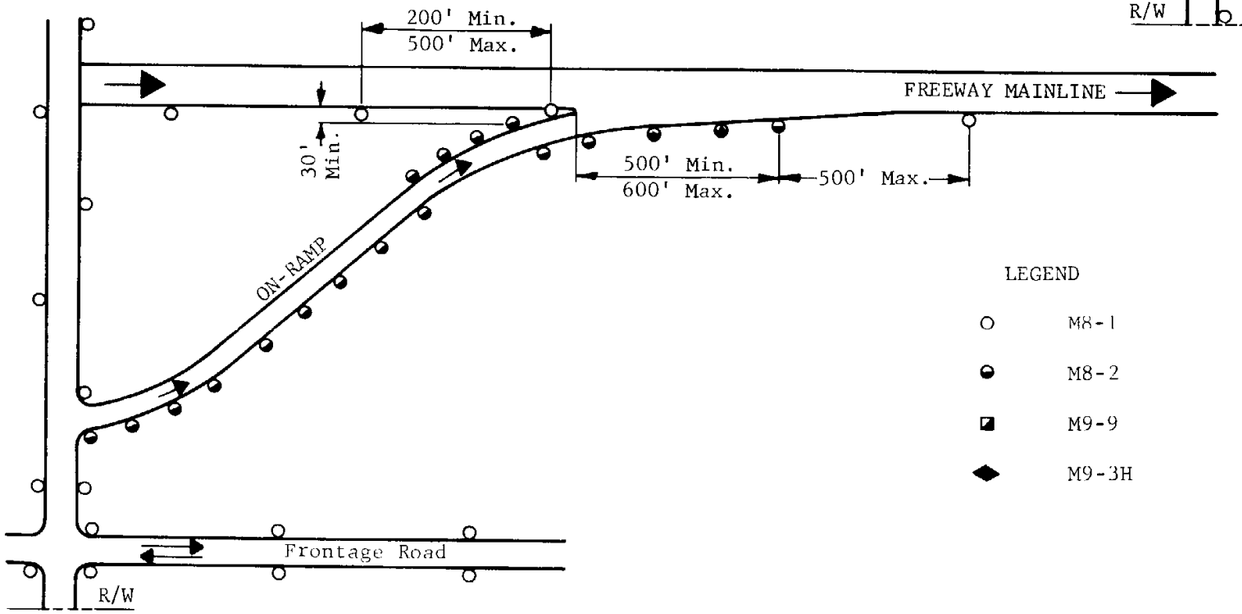

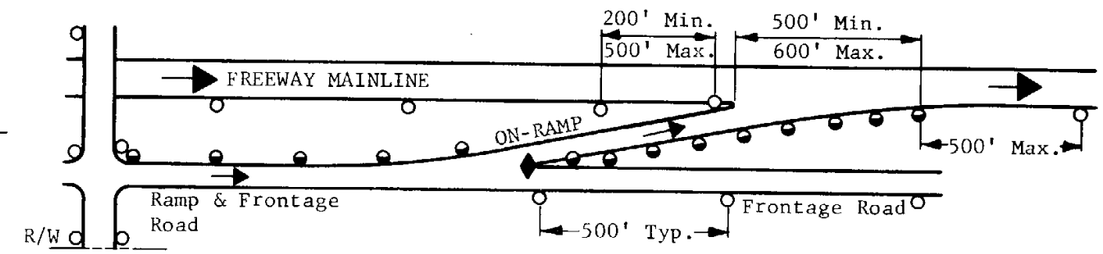

LEGEND

- M8-1
- M8-2
- M9-9
- M9-3H

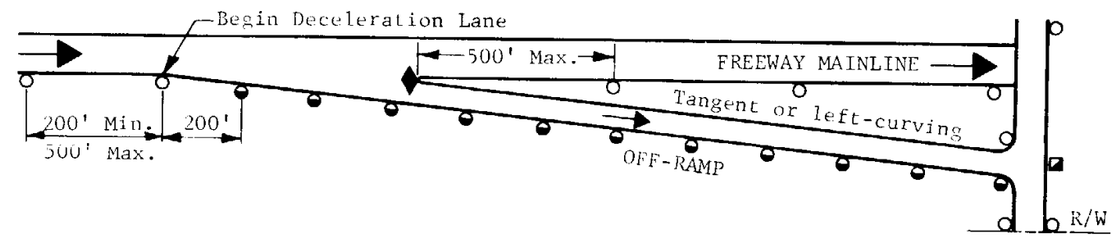

NO SCALE

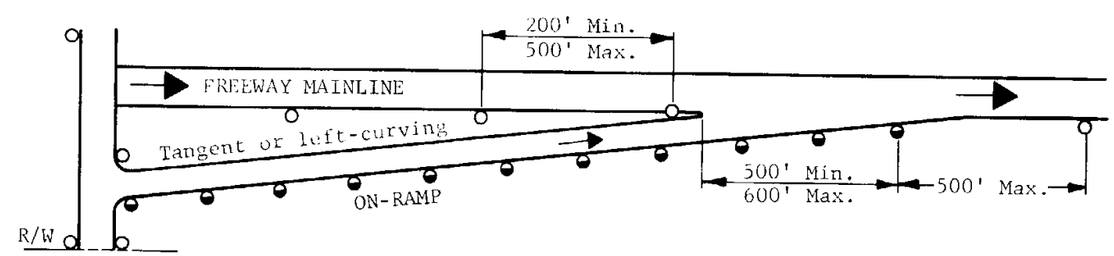

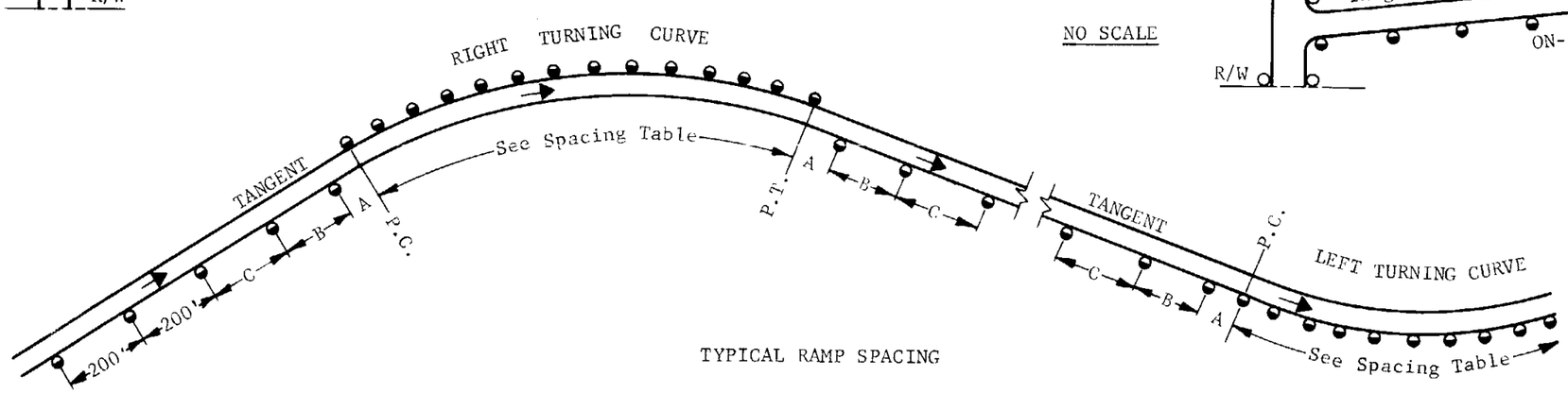

TYPICAL RAMP SPACING

ARIZONA HIGHWAY DEPARTMENT
PLANS DIVISION

DELINEATOR INTERCHANGE SPACING

Drawn	T.E.D. 4-68	Drawing No.
Traced	T.E.D. 4-68	C-9.06
Checked	J.P.O. JPO 4-68	
Approved Engr. Plans	J. Weidecker 4-68	

Rev

SPACING TABLE

Degree of Curve	Spacing on Curve in feet (S)	Space in Advance and Beyond Curve in Feet		
		A	B	C
0°-0' to 0°-30'	500	500	500	500
0°-45'	450	500	500	500
1°-0'	400	500	500	500
1°-15'	350	500	500	500
1°-30'	300	500	500	500
1°-45'	250	450	500	500
2°-0'	200	360	500	500
3°-0' to 5°-0'	150	270	450	500
6°-0' to 10°-0'	100	180	300	500
11°-0' to 17°-0'	75	135	225	450
18°-0' to 34°-0'	50	90	150	300
35°-0' and Greater	25	45	75	150

Important: Maximum spacing for M8-2 delineators is 200 feet (broken line).
Maximum mainline spacing for M8-1 delineators is 500 feet.
Necessary field adjustments in spacing length shall be made by the Engineer.

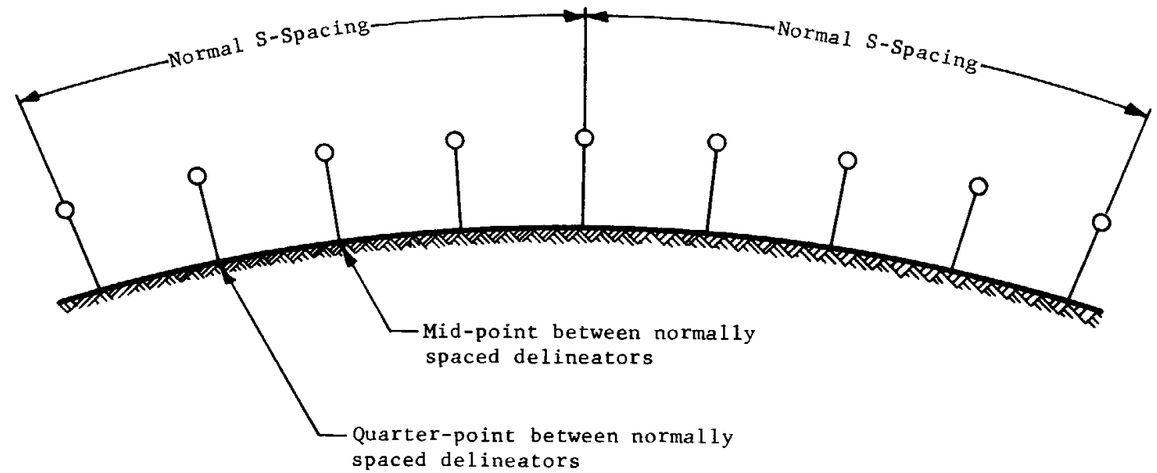

SPACING PROCEDURE FOR HORIZONTAL AND (CREST) VERTICAL CURVES
(Vertical Curve Shown)

The following method may be used to estimate the degree of curvature when insufficient data is available.

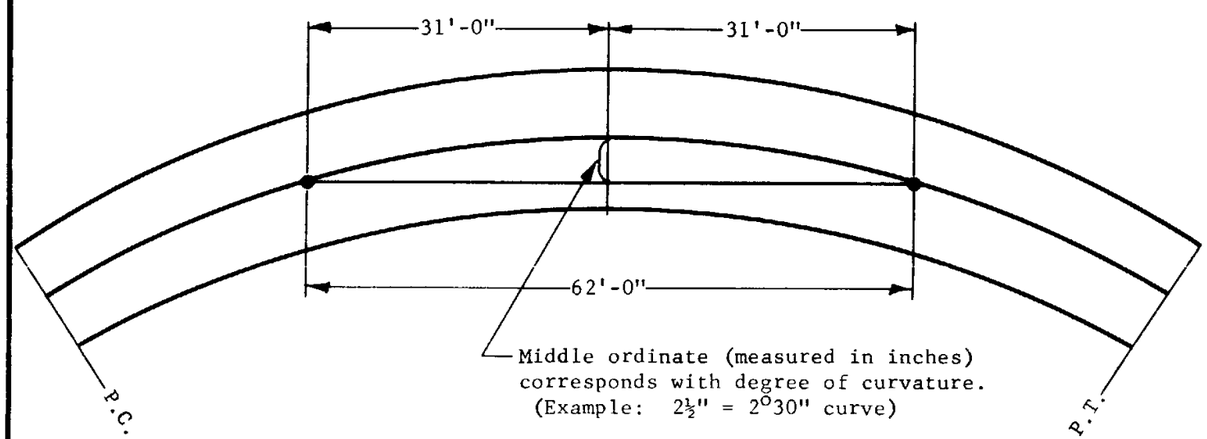

To Determine Spacing By This Method
Find degree of curvature by stretching a 62'-0" line at any convenient point on the centerline of the curve and then measure the middle ordinate (in inches). The middle ordinate corresponds with the degree of curvature.

NOTE:
There shall be a minimum of 3 delineators continuously visible on horizontal curves and the crest of vertical curves. When 3 delineators are not visible, install additional delineators at the midpoints between the normally spaced delineators. If 3 delineators are still not visible, install additional delineators at the quarter points or smaller even increments between the normally spaced delineators until 3 delineators become continuously visible.

ARIZONA HIGHWAY DEPARTMENT
PLANS DIVISION

DELINEATOR
SPACING TABLE

Drawn	T.E.D. 4-68	Drawing No.
Traced	T.E.D. 4-68	C-9.07
Checked	J.P.O. JPO 4-68	
Approved Engr. Plans	G. Heidecke 4-68	

Rev

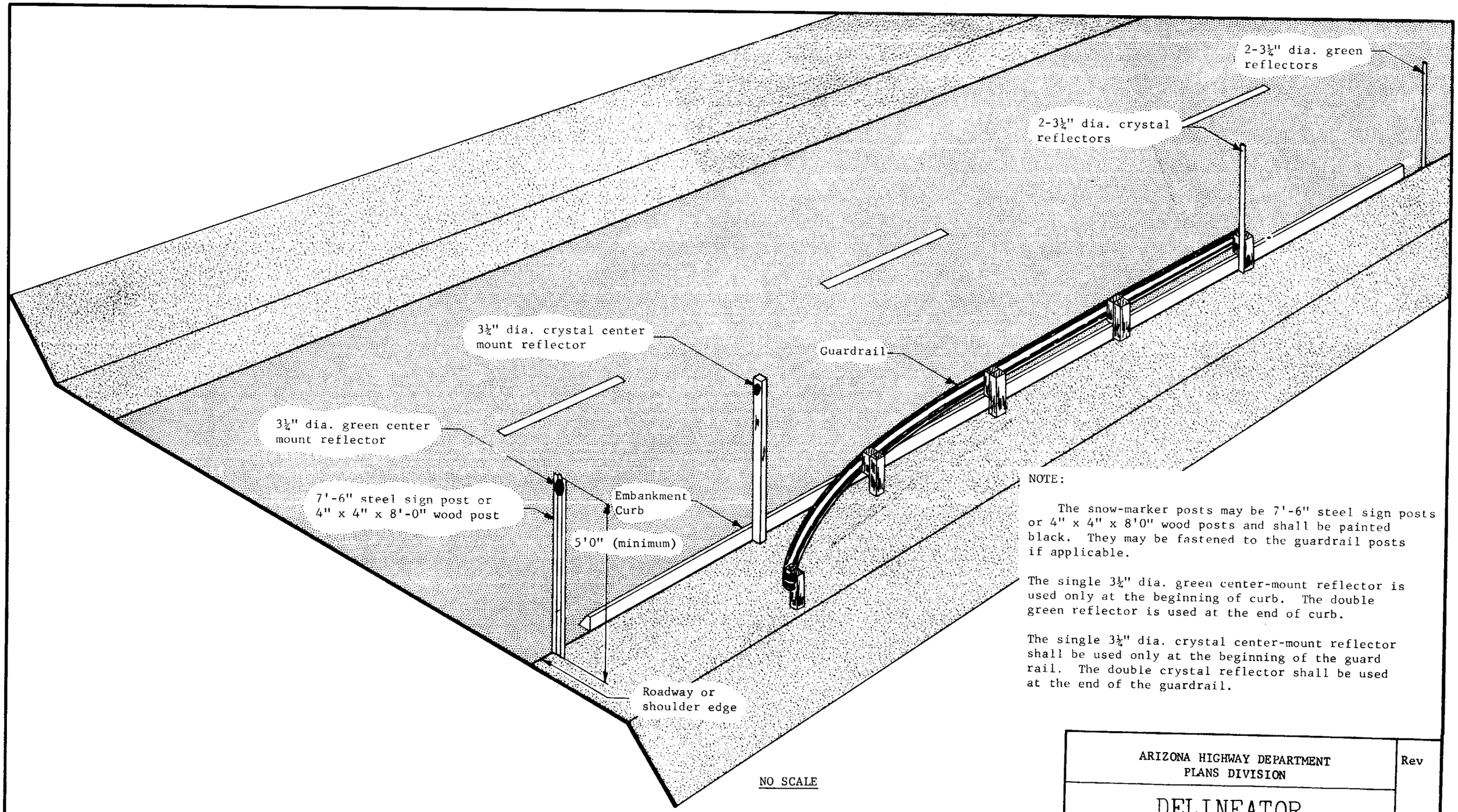

NO SCALE

NOTE:

The snow-marker posts may be 7'-6" steel sign posts or 4" x 4" x 8'0" wood posts and shall be painted black. They may be fastened to the guardrail posts if applicable.

The single 3¼" dia. green center-mount reflector is used only at the beginning of curb. The double green reflector is used at the end of curb.

The single 3¼" dia. crystal center-mount reflector shall be used only at the beginning of the guard rail. The double crystal reflector shall be used at the end of the guardrail.

ARIZONA HIGHWAY DEPARTMENT
PLANS DIVISION

Rev

DELINEATOR SNOW MARKER

Drawn	T.E.D. 4-68	Drawing No.
Traced	T.E.D. 4-68	C-9.08
Checked	J.P.O. JPO 4-68	
Approved Engr. Plans	G. Heidecker 4-68	

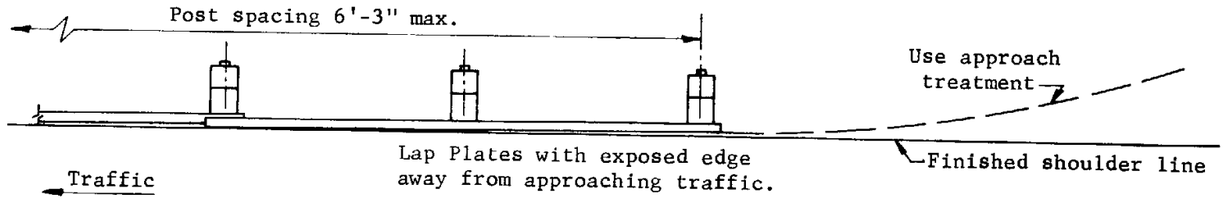

PLAN

GENERAL NOTES

Posts and blocks shall be nominal 8" X 8" rough, pressure treated and unpainted. Holes shall be bored before treatment.

All guard rail plate, fittings, hardware, etc. shall be galvanized.

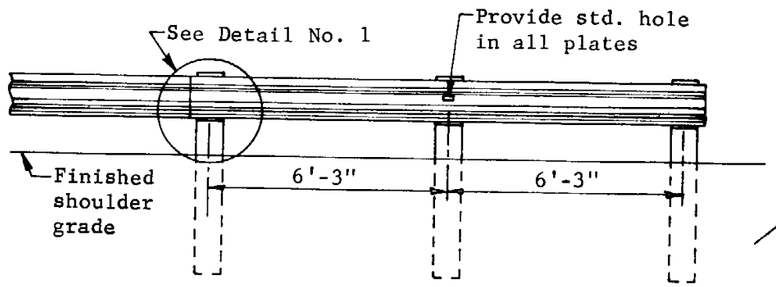

FACE ELEVATION

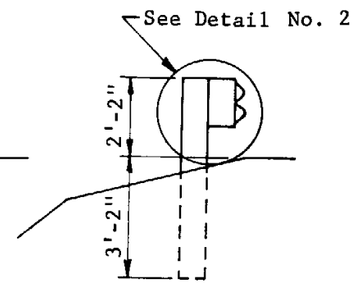

SIDE ELEVATION

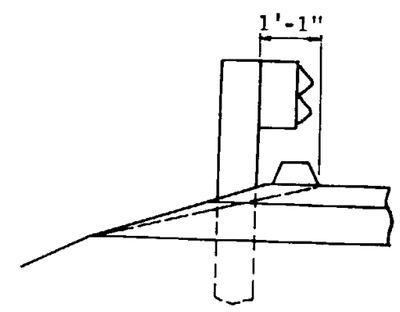

Installation of Guard Rail in embankment curb sections.

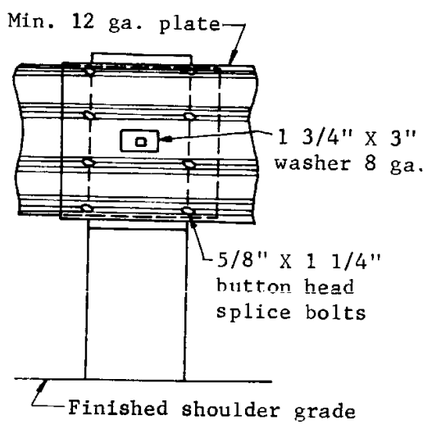

DETAIL NO. 1

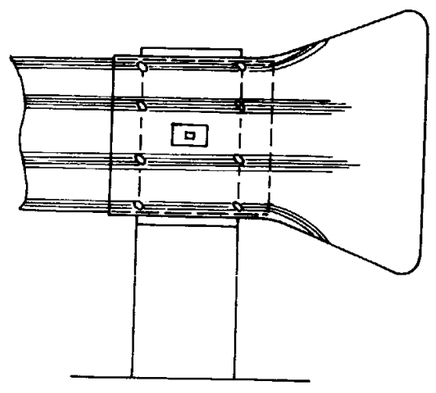

STANDARD TERMINAL SECTION

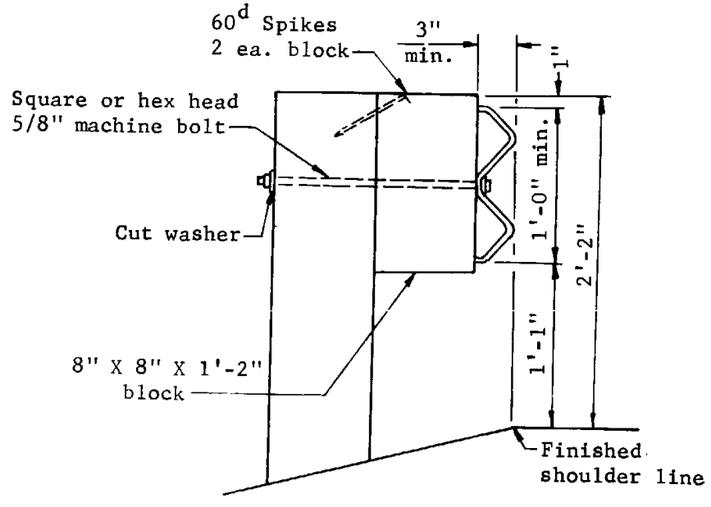

DETAIL NO. 2

ARIZONA HIGHWAY DEPARTMENT PLANS DIVISION		Rev
GUARD RAIL-STEEL SINGLE FACE DETAILS		
Drawn	D.G.	Drawing No.
Traced	S.L.T. 6-67	C-10.01
Checked	J.P.O. 5-68	
Approved Engr. Plans	5-68	

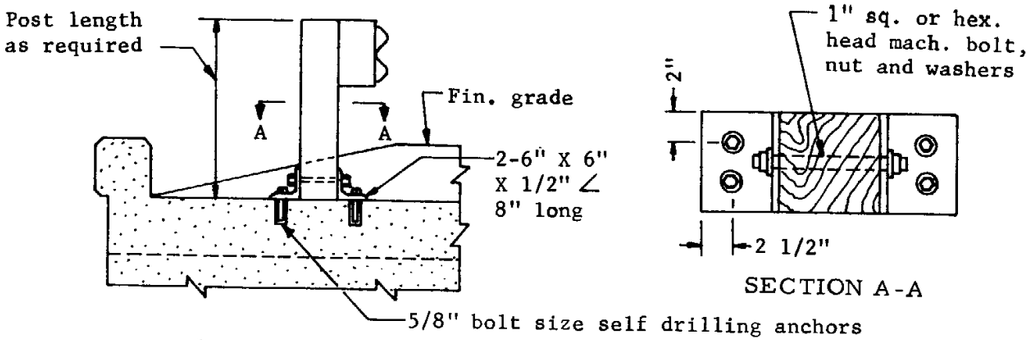

ELEVATION

DETAIL NO. 1-GUARD RAIL POST INSTALLATION ON STRUCTURES

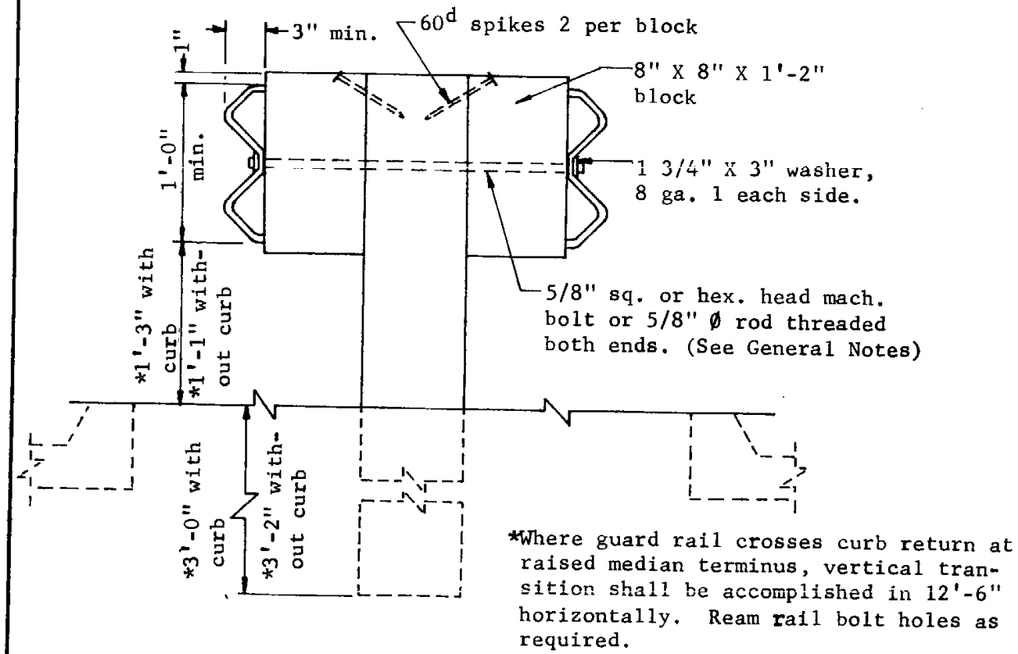

*Where guard rail crosses curb return at raised median terminus, vertical transition shall be accomplished in 12'-6" horizontally. Ream rail bolt holes as required.

DETAIL NO. 2 - MEDIAN BARRIER

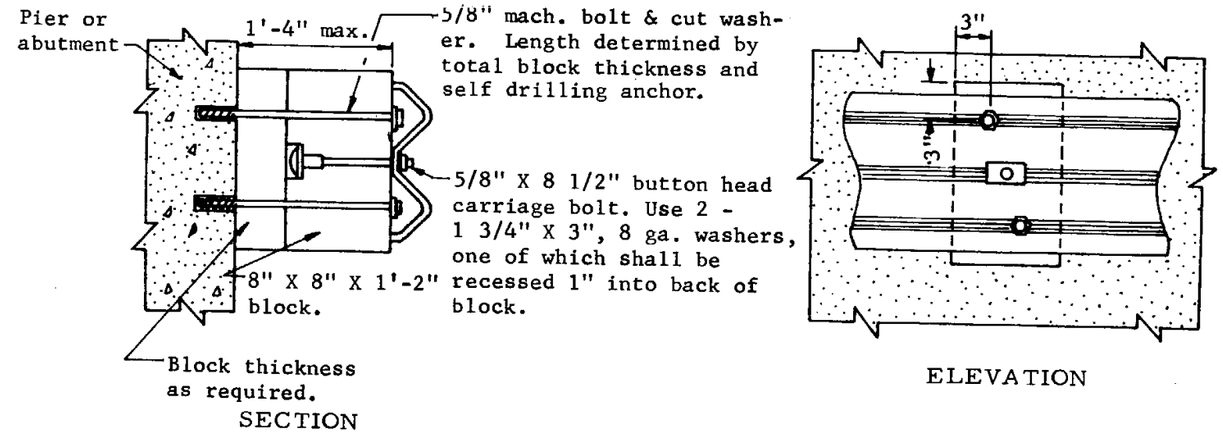

SECTION

ELEVATION

DETAIL NO. 3 - ATTACHMENT OF GUARD RAIL TO PIERS

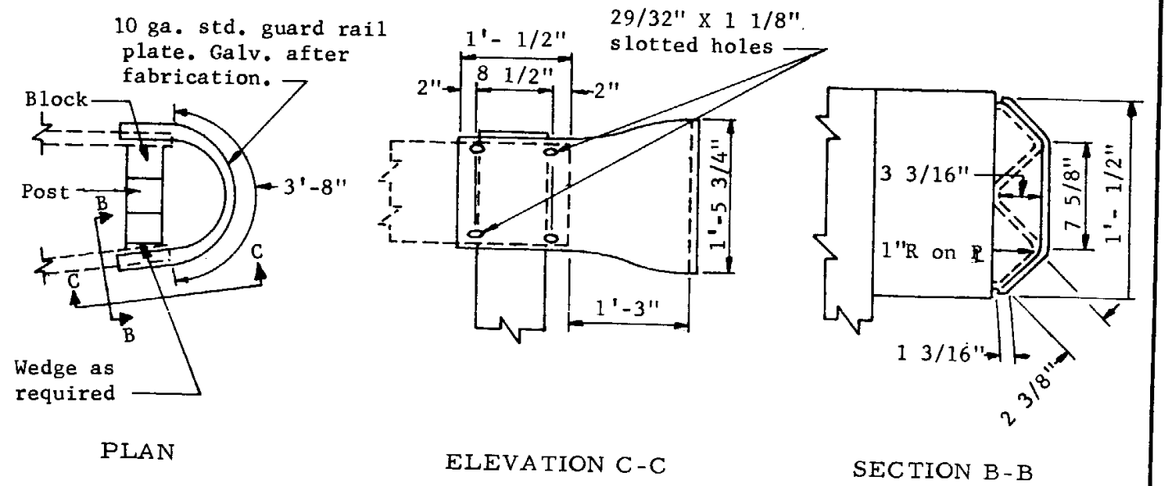

PLAN

ELEVATION C-C

SECTION B-B

DETAIL NO. 4 - SPECIAL TERMINAL SECTION

GENERAL NOTES

For other applicable guard rail details, see Std. C-10.01.

Bolt ends shall not project more than 1 1/2" beyond face of block. If adjustment shortening is required, threads shall be left in functional condition.

5/8" bolt size self drilling anchors shall have a min. 1500# pull out strength in 2500 p.s.i. concrete in accordance with manufacturer's specifications.

ARIZONA HIGHWAY DEPARTMENT PLANS DIVISION			Rev
GUARD RAIL - STEEL MISCELLANEOUS DETAILS			
Drawn	D.G. 5-67	Drawing No.	
Traced	S.L.T. 9-67		
Checked	J.P.O. JPO 5-68	C-10.02	
Approved Engr. Plans	G Weidecker 5-68		

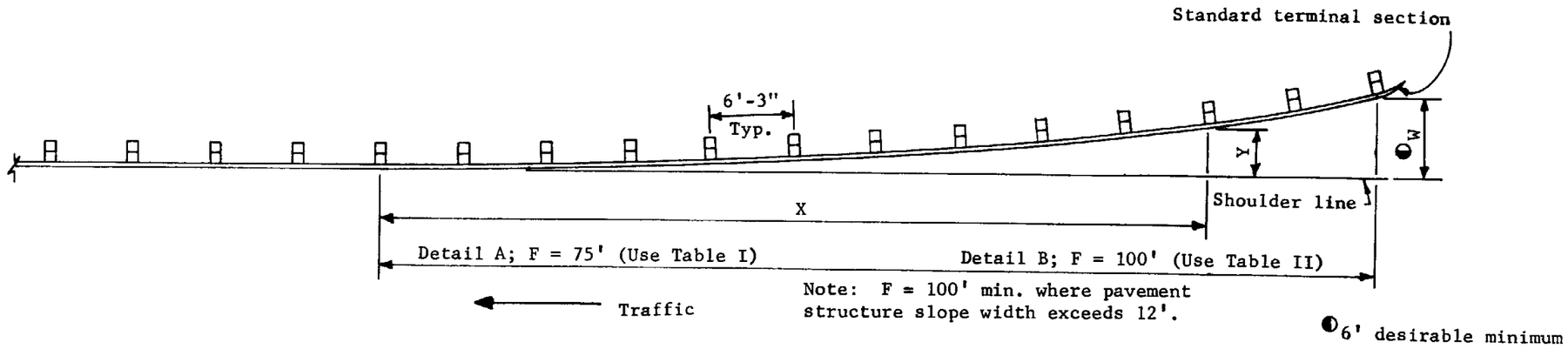

GENERAL NOTES

When the value of W and/or F is different than values shown in the tables, use the formula to compute applicable Y values.

Where necessary, dimension F may be increased to provide better alignment and grade.

TABLE I

X	Y (Feet) W			
	3'-0"	4'-0"	5'-0"	6'-0"
12'-6"	0.08	0.11	0.14	0.17
25'-0"	0.33	0.44	0.55	0.67
37'-6"	0.75	1.00	1.25	1.50
50'-0"	1.33	1.78	2.22	2.67
62'-6"	2.08	2.78	3.42	4.11
75'-0"	3.00	4.00	5.00	6.00

TABLE II

X	Y (Feet) W					
	5'-0"	6'-0"	7'-0"	8'-0"	9'-0"	10'-0"
12'-6"	0.08	0.09	0.11	0.12	0.14	0.16
25'-0"	0.31	0.37	0.44	0.50	0.56	0.62
37'-6"	0.70	0.84	0.99	1.13	1.27	1.41
50'-0"	1.25	1.50	1.75	2.00	2.25	2.50
62'-6"	1.90	2.28	2.66	3.01	3.42	3.91
75'-0"	2.81	3.39	3.94	4.50	5.06	5.62
87'-6"	3.81	4.57	5.34	6.10	6.86	7.66
100'-0"	5.00	6.00	7.00	8.00	9.00	10.00

$Y = (W)X^2/F^2$ = Offset from shoulder line to guard rail.
W = Distance between shoulder line and desired location of end of guard rail.
F = Length of flared guard rail.
X = Distance from beginning of parabolic flare.

6'-0" indicates the preferred value.

ARIZONA HIGHWAY DEPARTMENT
PLANS DIVISION

GUARD RAIL-STEEL APPROACH END TREATMENT

Drawn	D.G.	Drawing No.
Traced	D.G. 4-3-67	C-10.03
Checked	J.P.O. 5-68	
Approved Engr. Plans	5-68	

Rev

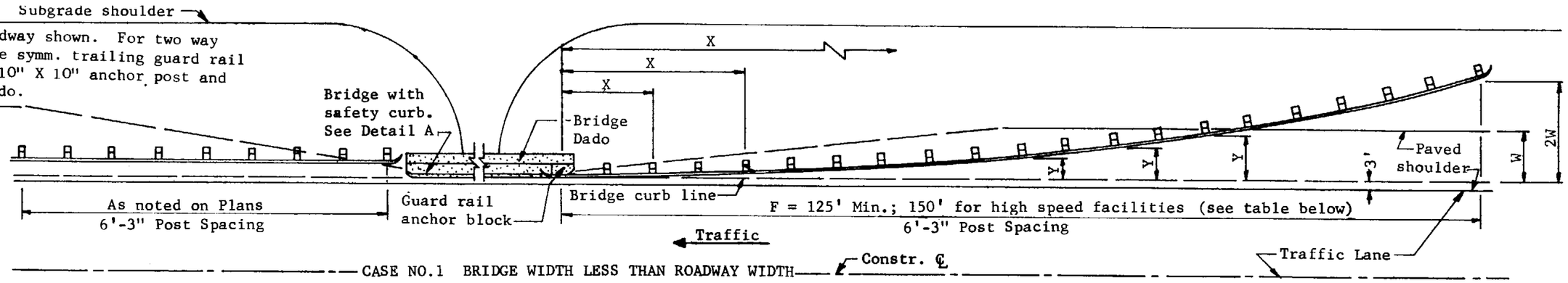

CASE NO.1 BRIDGE WIDTH LESS THAN ROADWAY WIDTH

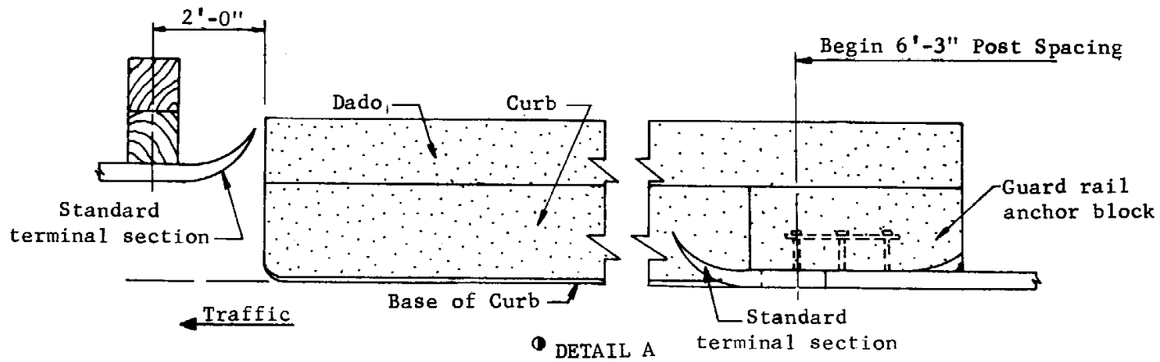

DETAIL A

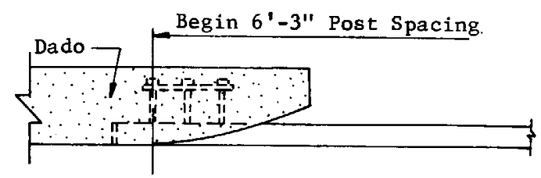

DETAIL B

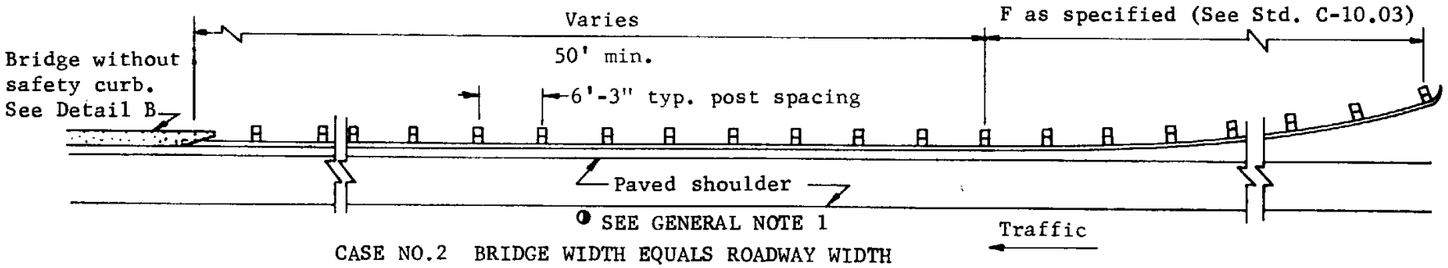

SEE GENERAL NOTE 1

CASE NO.2 BRIDGE WIDTH EQUALS ROADWAY WIDTH

Shoulder Width	W \ X	12'-6"	25'-0"	37'-6"	50'-0"	62'-6"	75'-0"	87'-6"	100'-0"	112'-6"	125'-0"	137'-6"	150'-0"	X / F
5'	2'	0.04	0.16	0.36	0.64	1.00	1.44	1.96	2.56	3.24	4.00			125'
8'	5'	0.10	0.40	0.90	1.60	2.50	3.60	4.90	6.40	8.10	10.00			125'
8'	5'	0.07	0.28	0.63	1.11	1.74	2.50	3.40	4.44	5.63	6.94	8.40	10.00	150'
10'	7'	0.14	0.56	1.26	2.24	3.50	5.04	6.86	8.96	11.34	14.00			125'
10'	7'	0.10	0.39	0.87	1.54	2.42	3.50	4.76	6.23	7.88	9.72	11.76	14.00	150'

Formula: $Y = 2W(X^2/F^2)$

W = Distance between curb line extended and shoulder line of approach roadway.
F = Length of flared guard rail.
X = Distance from first post at bridge to any 12'-6" multiple of guard rail flare.
Y = Offset from curb line to face of guard rail.

GENERAL NOTES

For shoulder widths less than 5' or when bridge width equals roadway width, use straight guard rail with flared approach end treatment.

When guard rail is continued beyond the required flare, the last four flare panels shall be modified to avoid a sharp change in direction.

When the value of W and/or F is different than values shown in the table, use the formula to compute applicable Y values.

For construction details of guard rail attachment to bridge, see Plans.

Where necessary, dimension F may be increased to provide better alignment and grade.

ARIZONA HIGHWAY DEPARTMENT
PLANS DIVISION

GUARD RAIL-STEEL DETAIL AT BRIDGE APPROACHES

Drawn	D.G.	Drawing No.
Traced	S.L.T. 9-67	C-10.04
Checked	J.P.O. JPO 5-68	
Approved Engr. Plans	G. Heidecker 5-68	

Rev

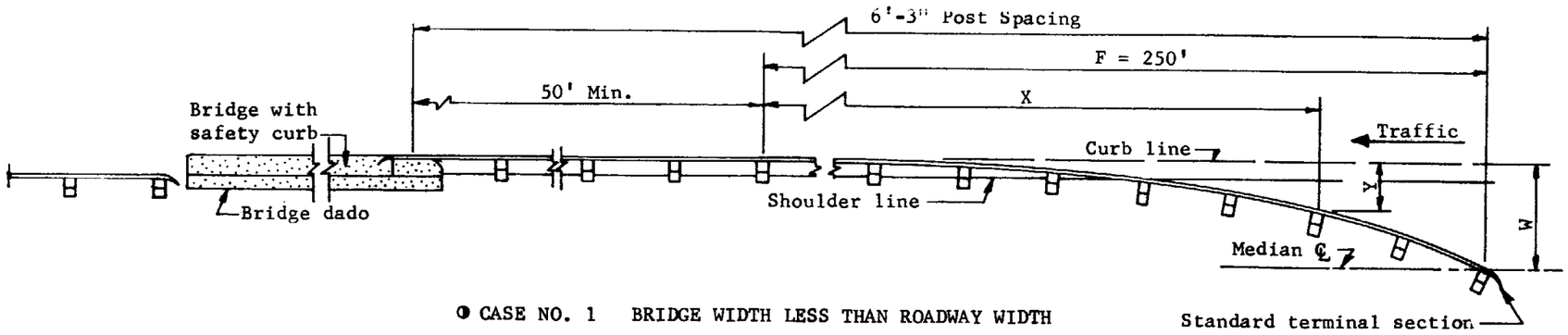

◑ CASE NO. 1 BRIDGE WIDTH LESS THAN ROADWAY WIDTH

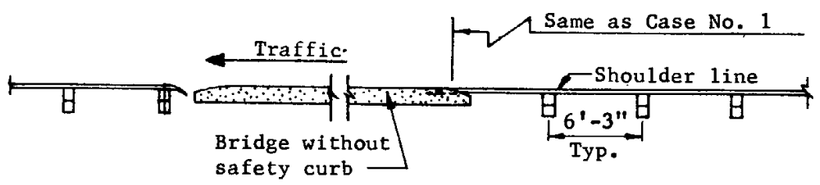

◑ CASE NO. 2 BRIDGE WIDTH EQUALS ROADWAY WIDTH

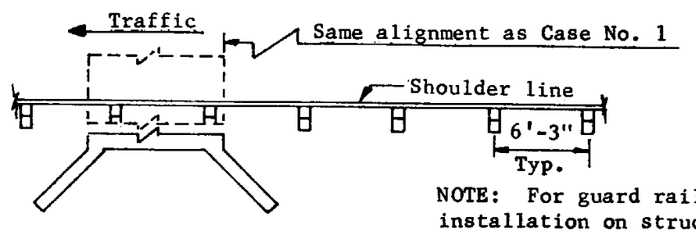

NOTE: For guard rail post installation on structures, see Std. C-10.02

◑ CASE NO. 3 BOX CULVERT

GENERAL NOTES

When the value of W and/or F is different than values shown in the table, use the formula to compute applicable Y values.

For construction details of guard rail attachment to bridge, see Std. C-10.04 and Plans.

Where necessary, dimension F may be increased to provide better alignment and grade.

◑ One way roadway shown. For two way roadway, use symm. guard rail flare and fixed dado attachment at trailing end of bridge.

X	Y(Feet)				
	W				
	26'	30'	34'	38'	42'
12'-6"	.065	.075	.085	.095	.105
25'-0"	.260	.300	.340	.38	.42
37'-6"	.585	.675	.765	.86	.95
50'-0"	1.040	1.200	1.360	1.52	1.68
62'-6"	1.625	1.875	2.125	2.38	2.63
75'-0"	2.340	2.700	3.060	3.42	3.78
87'-6"	3.185	3.675	4.165	4.66	5.15
100'-0"	4.16	4.800	5.440	6.08	6.72
112'-6"	5.265	6.075	6.885	7.70	8.51
125'-0"	6.500	7.500	8.500	9.50	10.50
137'-6"	7.865	9.075	10.285	11.50	12.71
150'-0"	9.360	10.800	12.240	13.68	15.12
162'-6"	10.985	12.675	14.365	16.06	17.75
175'-0"	12.740	14.700	16.660	18.62	20.58
187'-6"	14.625	16.875	19.125	21.38	23.63
200'-0"	16.640	19.200	21.760	24.32	26.88
212'-6"	18.785	21.675	24.565	27.46	30.35
225'-0"	21.060	24.300	27.540	30.78	34.02
237'-6"	23.465	27.075	30.685	34.28	37.88
250'-0"	26.00	30.00	34.00	38.00	42.00

Formula: $Y = (W)\ X^2/F^2$

W = Distance between curb line extended (Case No. 1), or shoulder line (Case Nos. 2 & 3), and median center line.
F = Length of flared portion of guard rail.
X = Distance from beginning of parabolic flare to any 12'-6" multiple of parabolic flare.
Y = Offset from curb line or shoulder line to face of guard rail.

ARIZONA HIGHWAY DEPARTMENT
PLANS DIVISION

Rev

GUARD RAIL-STEEL FLARE TO MEDIAN

Drawn	D.G.	Drawing No.
Traced	S.L.T. 9-67	C-10.05
Checked	J.P.O. JPO 5-68	
Approved Engr. Plans	G. Heidecker	

* Min. Std. approach end treatment
** Std. median flare

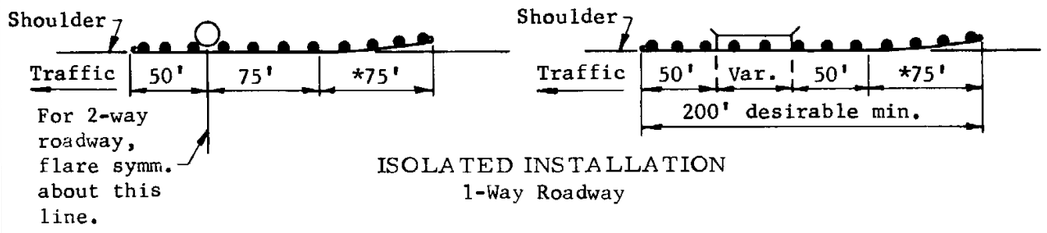

ISOLATED INSTALLATION
1-Way Roadway

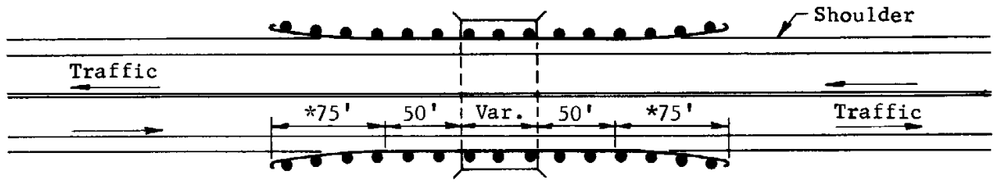

2-WAY ROADWAY OBSTRUCTION

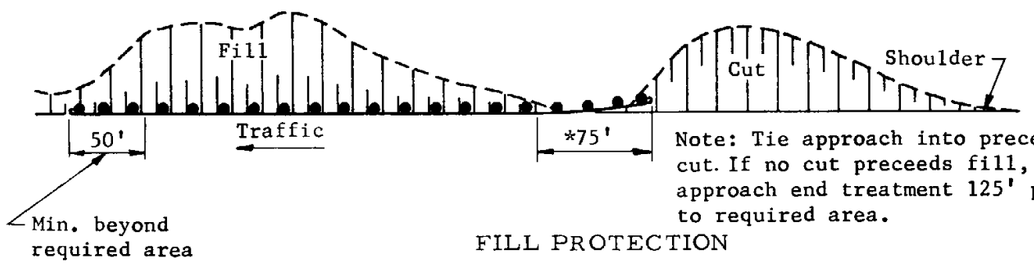

Note: Tie approach into preceeding cut. If no cut preceeds fill, begin approach end treatment 125' prior to required area.

FILL PROTECTION

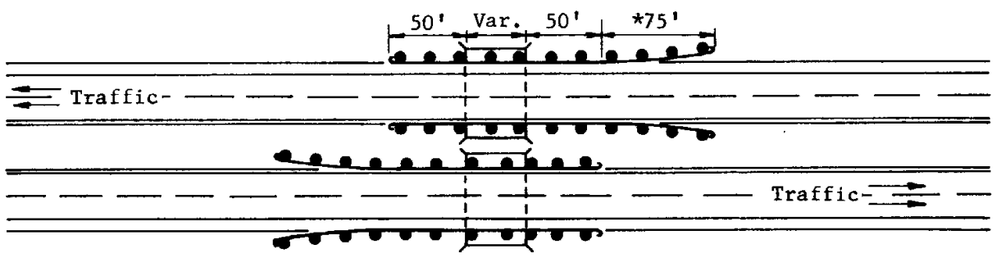

BOX CULVERT WITH DRIVABLE MEDIAN

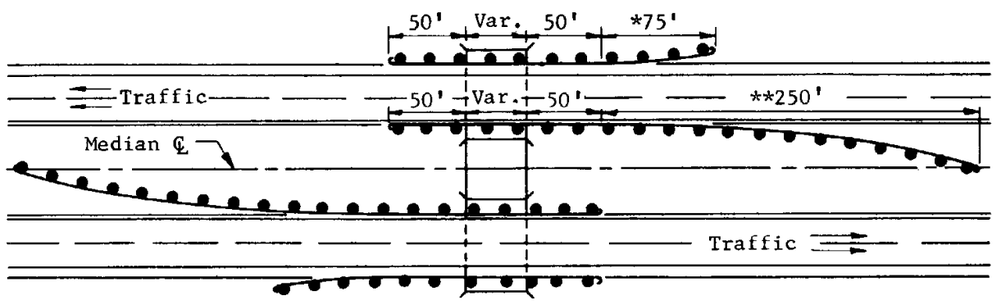

BOX CULVERT WITHOUT DRIVABLE MEDIAN

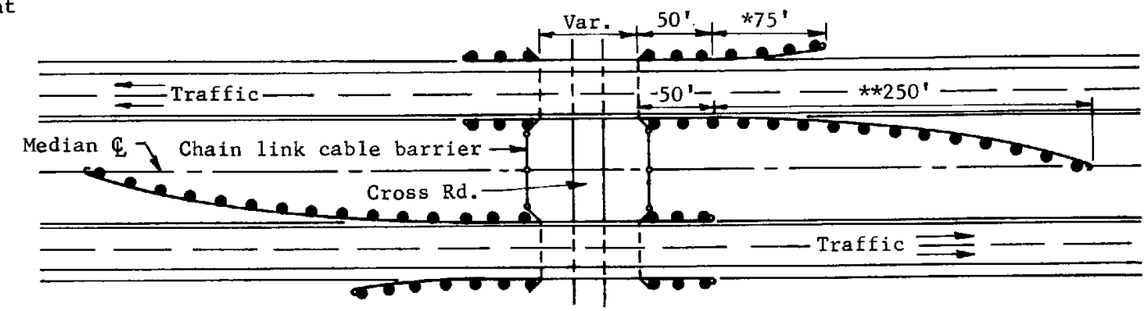

BRIDGE STRUCTURE WITH CROSS ROAD

No guard rail is normally required unless the median is less than 60', traffic lane to traffic lane.

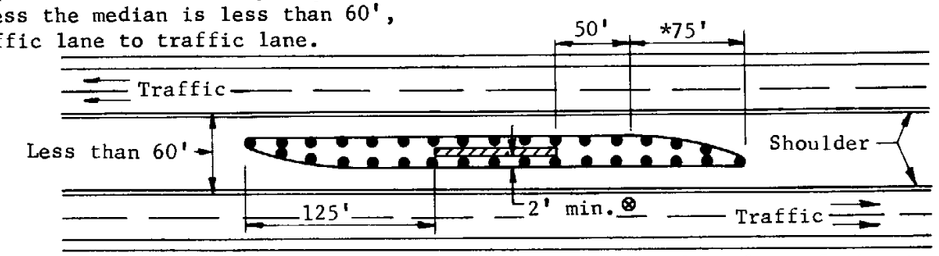

⊗ If distance from face of pier to face of guard rail is less than 2' attach guard rail to pier.

MEDIAN BRIDGE OR SIGN STANDARDS

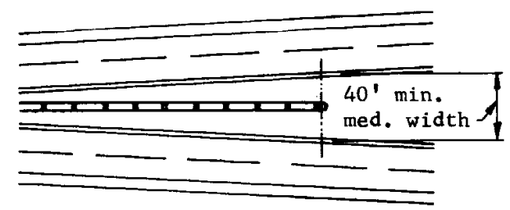

MEDIAN BARRIER TERMINUS

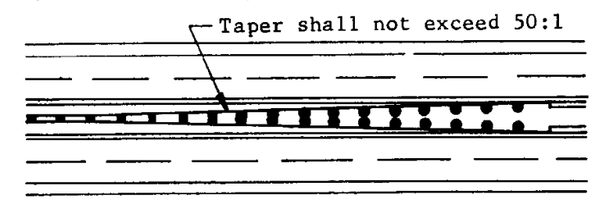

BARRIER TRANSITION AT OVERPASS

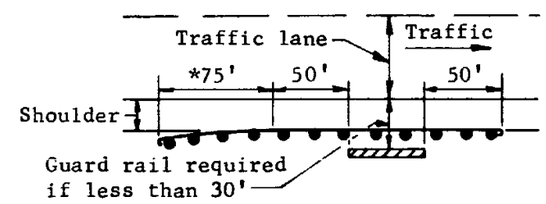

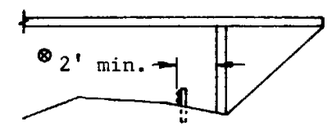

PIER, ABUTMENT OR SIGN BASE
RIGHT SIDE OF ROADWAY

GENERAL NOTES
These drawings DO NOT establish warrants for guard rail installation,
Post spacing shall be 6'-3" throughout.

ARIZONA HIGHWAY DEPARTMENT PLANS DIVISION		Rev
GUARD RAIL-STEEL TYPICAL INSTALLATIONS		
Drawn	S.L.T., R.A.F.	Drawing No.
Traced	R.A.F. 9-67	C-10.06
Checked	J.P.O. JPO 5-68	
Approved Engr. Plans	G Hiedecker 5-68	

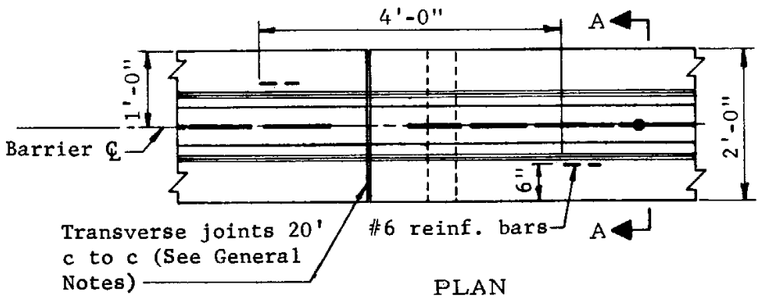

PLAN

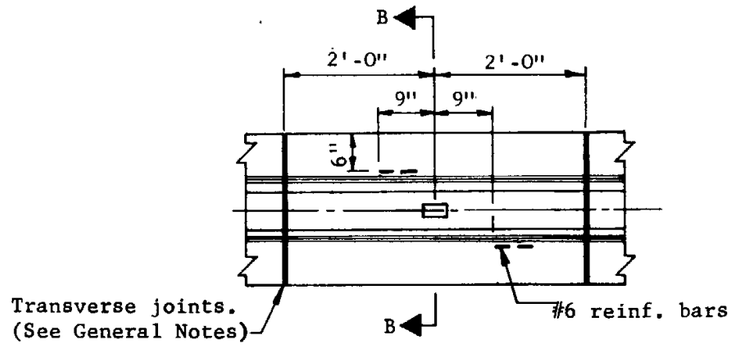

PLAN AT SIGN INSTALLATION

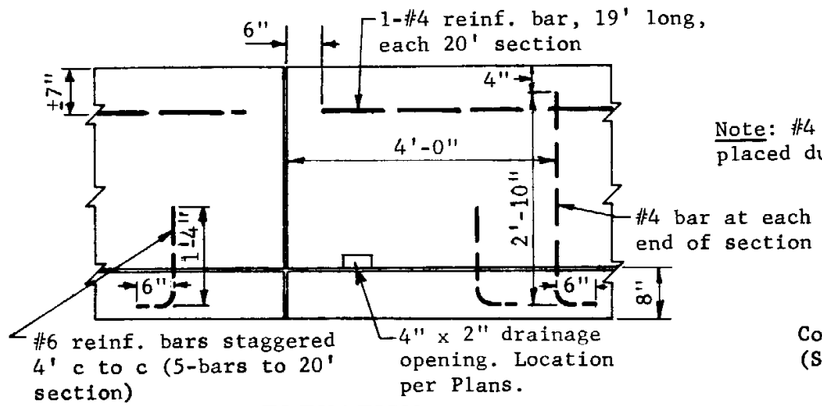

ELEVATION

Note: #4 bars may be placed during pour.

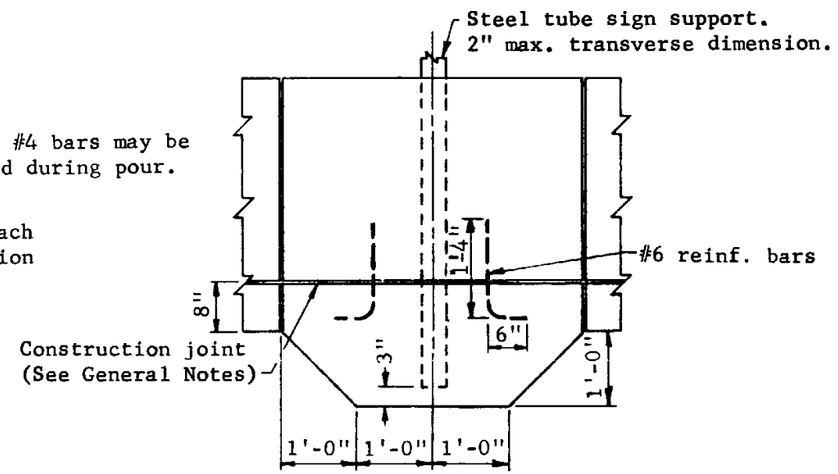

ELEVATION AT SIGN INSTALLATION

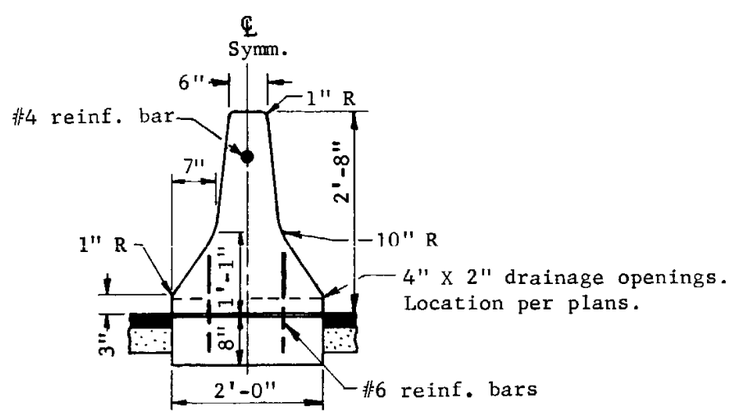

SECTION A-A

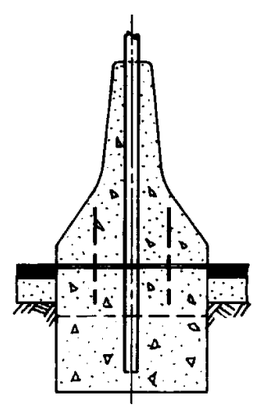

SECTION B-B

GENERAL NOTES

All concrete shall be Class A.

Transverse joints shall extend through the foundation slab. For continuous or sectional construction, use a 1/4" open joint. Edge joints with a 1/4" radius tool.

Construction joint and #6 bars may be eliminated when barrier and foundation slab are poured monolithic.

For details of transition at terminals and structures, see Std. C-10.09.

ARIZONA HIGHWAY DEPARTMENT PLANS DIVISION			Rev
MEDIAN BARRIER CONCRETE			
Drawn	D.G.	Drawing No.	
Traced	R.A.F. 8/67		
Checked	J.P.O. JPO 5-68	C-10.08	
Approved Engr. Plans	G Weidecker 5-68		

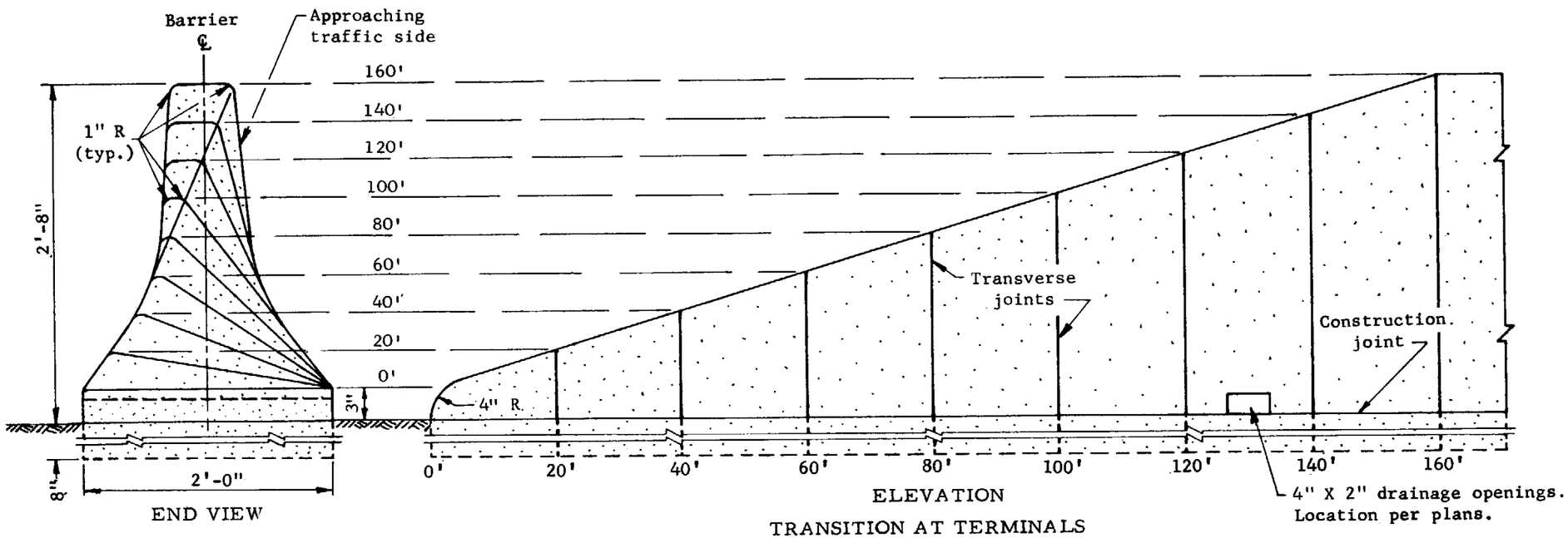

END VIEW

ELEVATION

TRANSITION AT TERMINALS

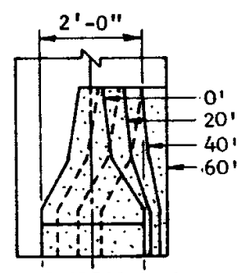

SECTION A-A

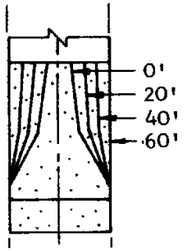

SECTION B-B; 2'-0" PIER

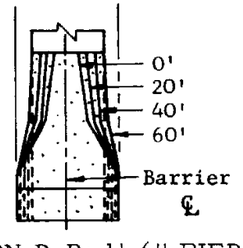

SECTION B-B; 1'-6" PIER

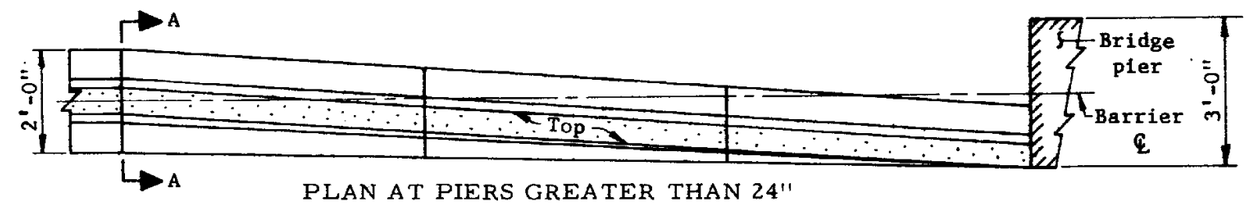

PLAN AT PIERS GREATER THAN 24"

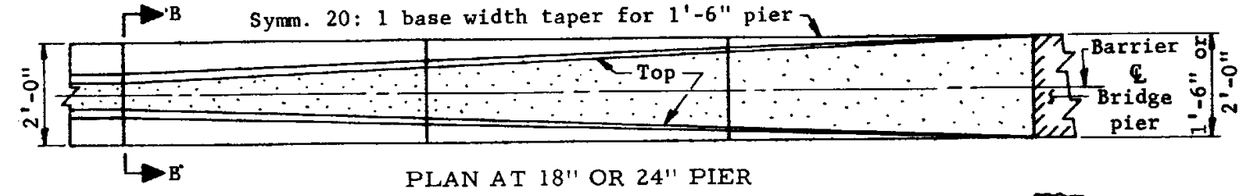

PLAN AT 18" OR 24" PIER

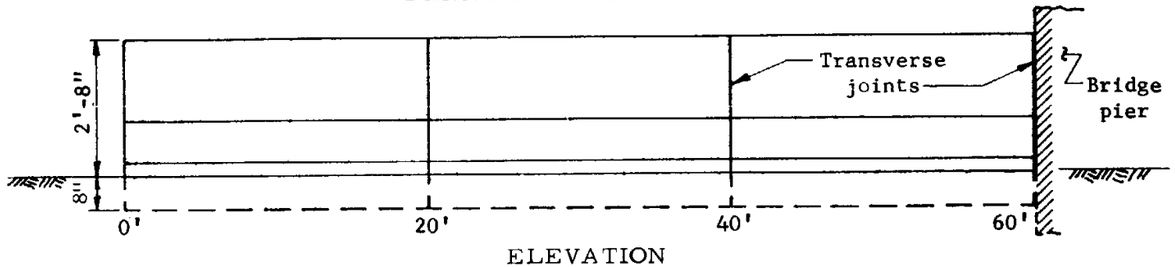

ELEVATION

TYPICAL TRANSITION AT BRIDGE PIERS

GENERAL NOTES

All concrete shall be Class A.

Faces of median barrier shall provide a smooth transition.

For median barrier construction details, see Std. C-10.08.

ARIZONA HIGHWAY DEPARTMENT
PLANS DIVISION

CONCRETE MED. BARRIER TRANSITION DETAILS

Drawn	D.G. 7/67	Drawing No.
Traced	R.A.F. 8/67	C-10.09
Checked	J.P.O. JPO 5-68	
Approved Engr. Plans	H. Heidrich 5-68	

Rev

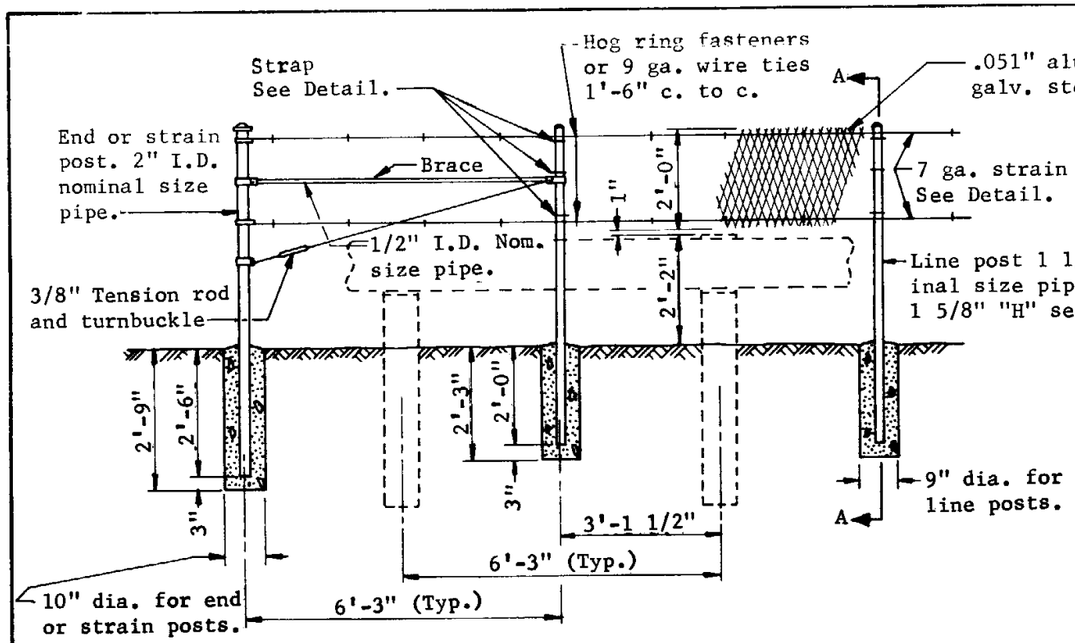

EXPANDED METAL GLARE SCREEN

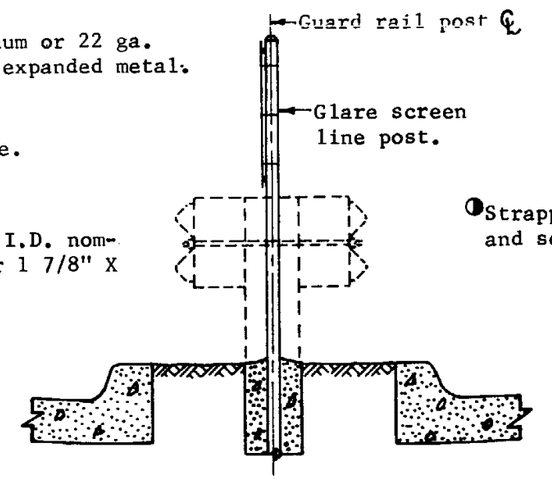

SECTION A-A

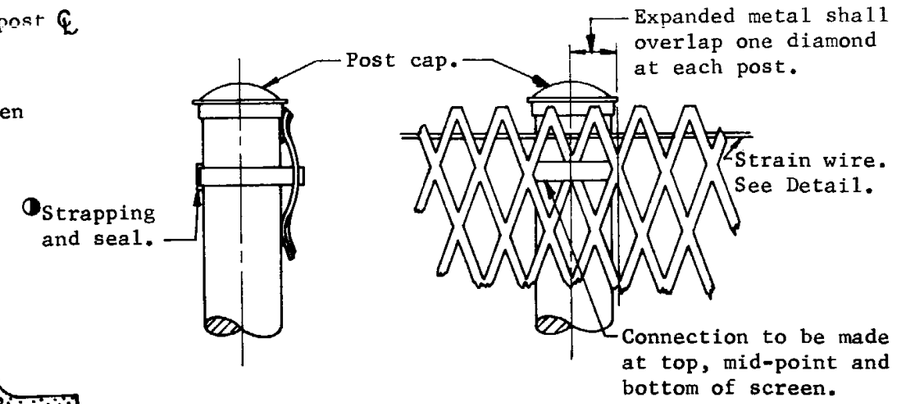

EXPANDED METAL POST CONNECTION DETAIL

◑Stainless steel strapping with aluminum expanded metal.
Galvanized steel strapping with steel expanded metal.

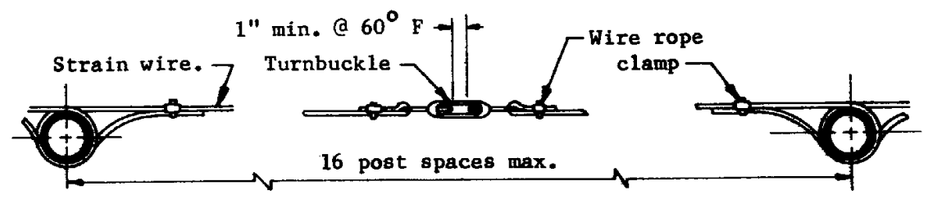

STRAIN WIRE DETAIL

Note: Place intermediate strain posts at 500' (max.) intervals with brace and tension rod each side. If chain link fence type is used, place stretcher bar on each side.

GENERAL NOTES

For guard rail details, see appropriate Guard Rail Standard.

There shall be no connection made between the glare screen and the guard rail.

All steel materials, except stainless, shall be galvanized in accordance with ASTM A-123.

All pipe posts shall be capped.

All concrete shall be Class A.

Expanded metal shall be 0.250" strand width with 1.33" X 4.0" bridge dimensions on tangents and 0.188" strand width with 0.93" X 2.0" bridge dimensions on curves.

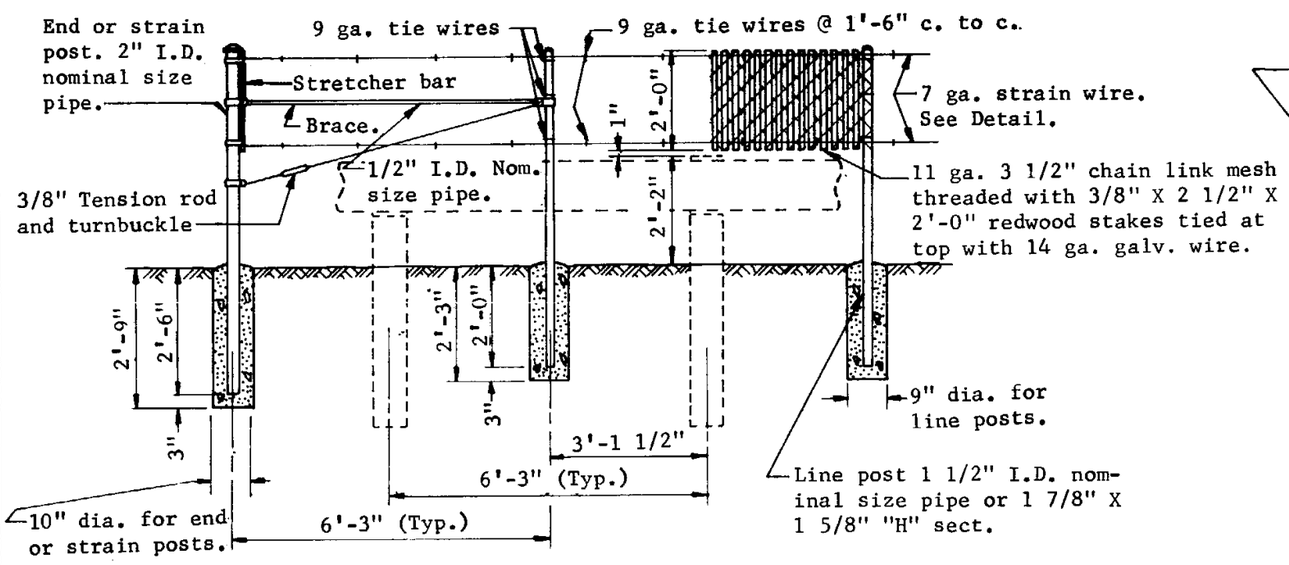

CHAIN LINK FENCE GLARE SCREEN

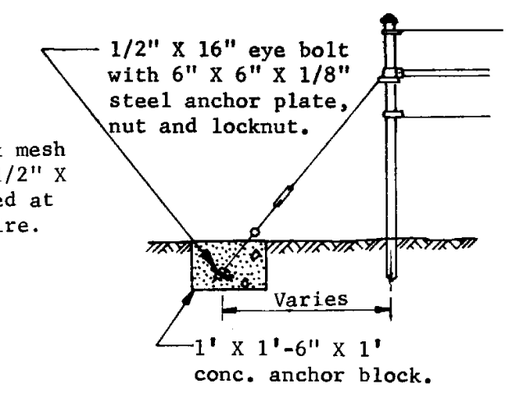

ALTERNATE END POST TENSION ROD LOCATION

ARIZONA HIGHWAY DEPARTMENT PLANS DIVISION			Rev
MEDIAN GLARE SCREEN			
Drawn	R.A.F. 4-67	Drawing No.	
Traced	S.L.T. 7-67	C-10.10	
Checked	J.P.O. JPO 5-68		
Approved Engr. Plans	G Weidecker 5-68		

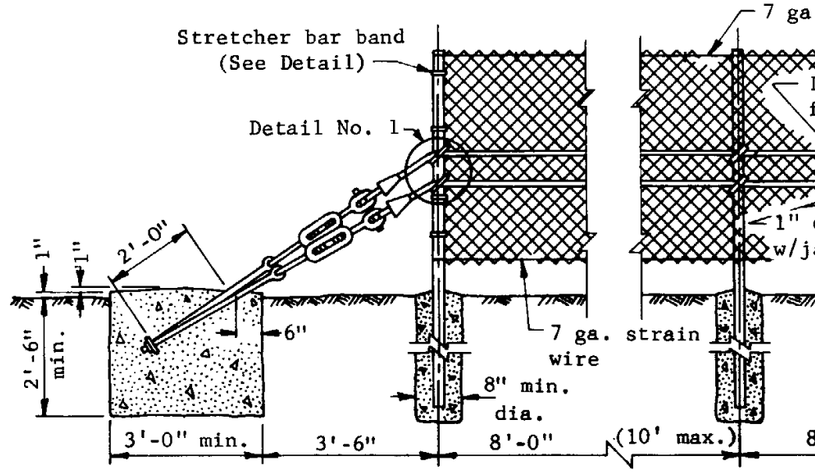

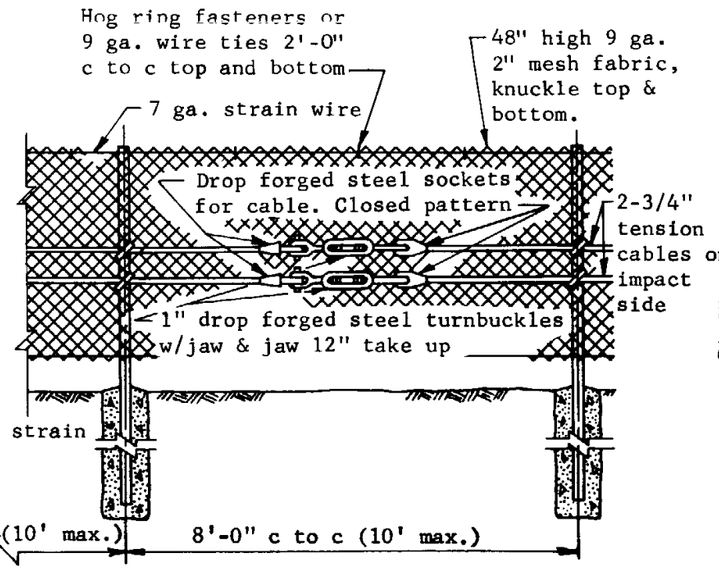

ELEVATION

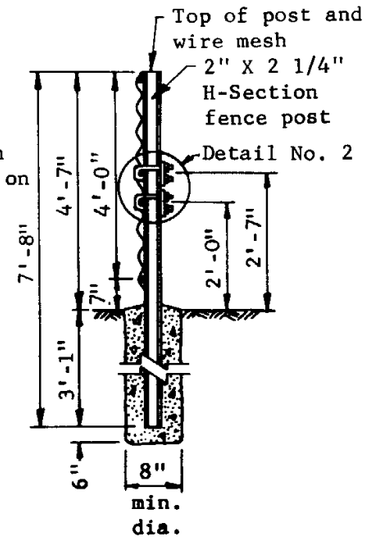

END VIEW

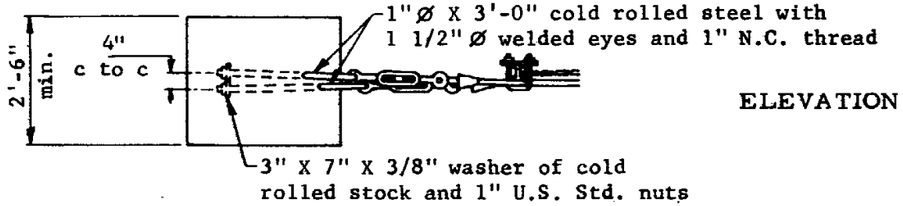

ANCHOR BLOCK PLAN

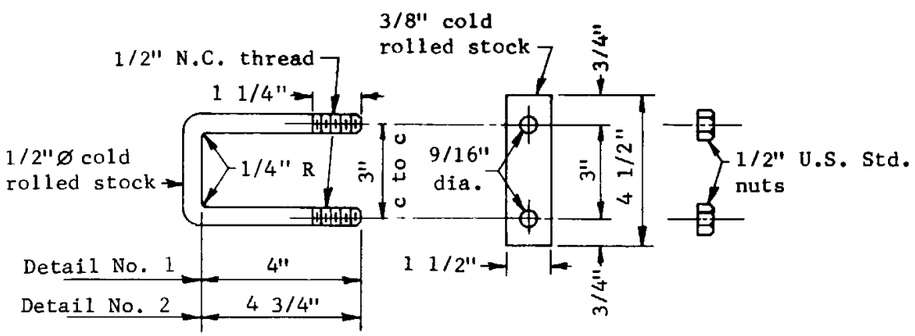

CABLE CLAMP DETAIL

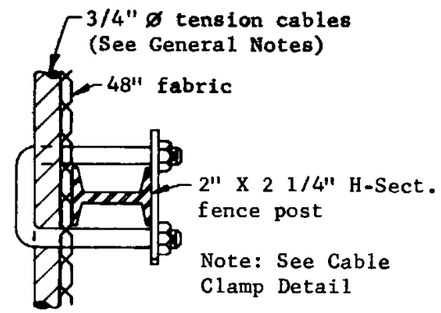

DETAIL NO. 2
Line Post Assembly

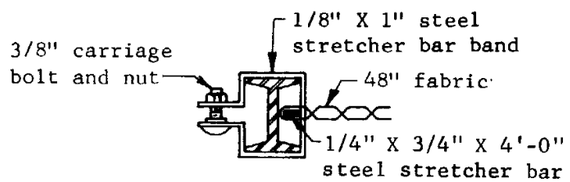

STRETCHER BAR
BAND DETAIL

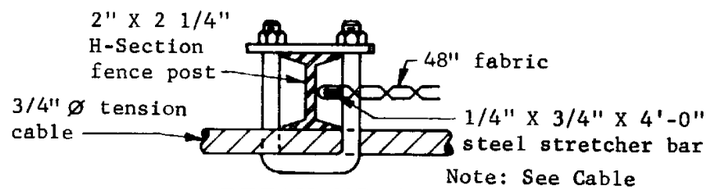

DETAIL NO. 1
End Post Assembly

Note: See Cable
Clamp Detail

GENERAL NOTES

All concrete shall be Class A.

All material and fittings shall be galvanized in accordance with ASTM A 123.

3/4" tension cables shall be preformed, 6 X 19, hemp core, galvanized, right regular lay and of improved plow steel.

Fittings not specifically detailed shall be of approved, heavy duty design.

ARIZONA HIGHWAY DEPARTMENT
PLANS DIVISION

Rev

CHAIN LINK CABLE BARRIER FENCE

Drawn	D.G.	Drawing No.
Traced	R.A.F 2-68	C-10.11
Checked	J.P.O 5-68	
Approved Engr. Plans		

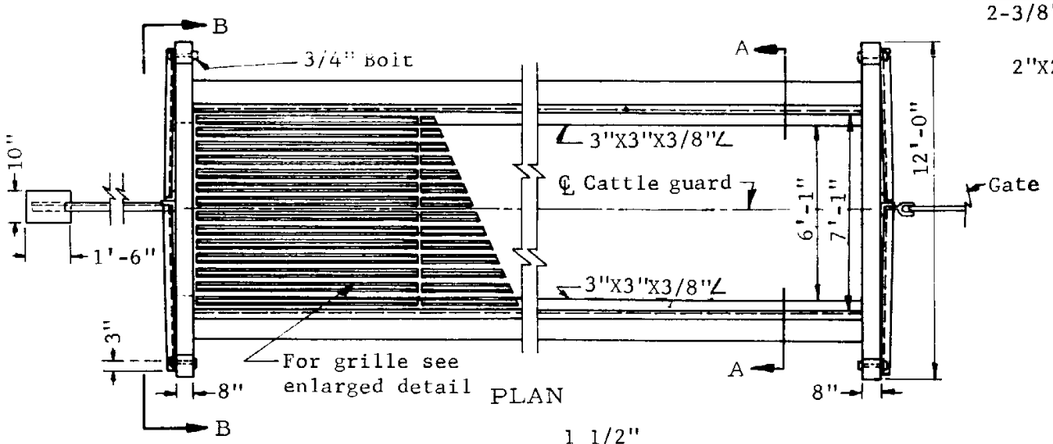

PLAN

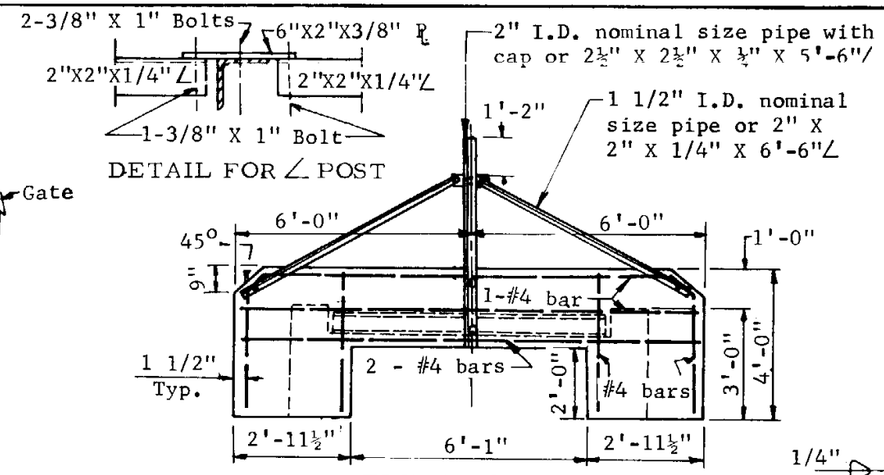

ELEVATION B-B

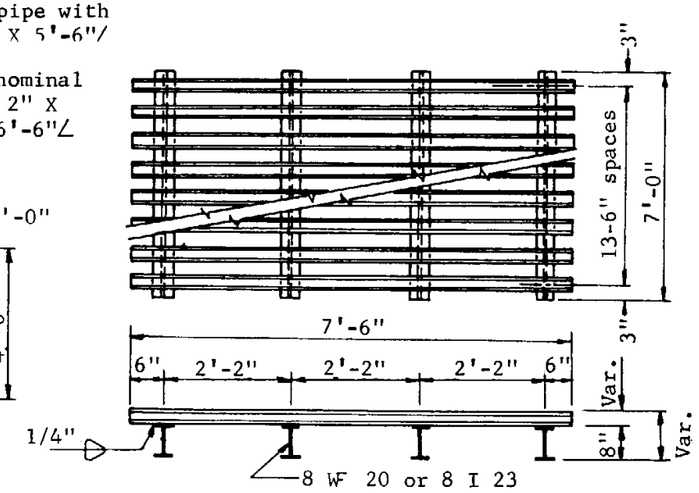

DETAIL OF WELDED GRILLE UNIT

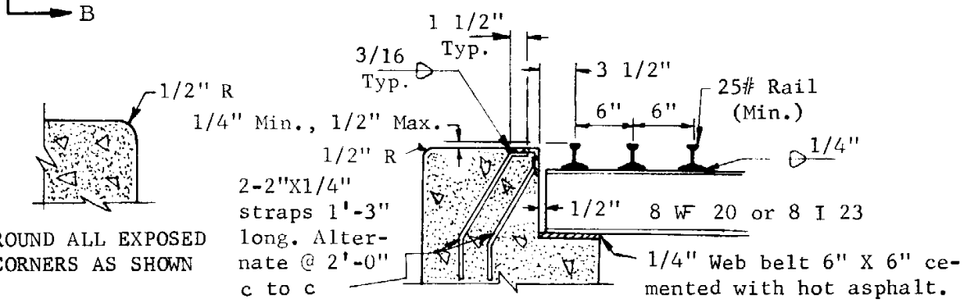

PART SECTION A-A
RAIL TREADS

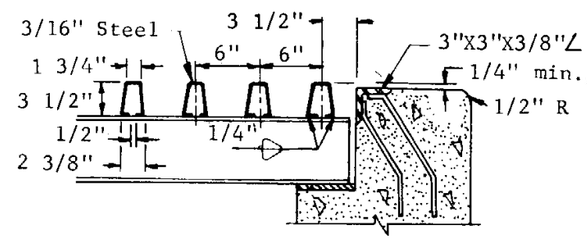

PART SECTION A-A
∩ TYPE TREADS

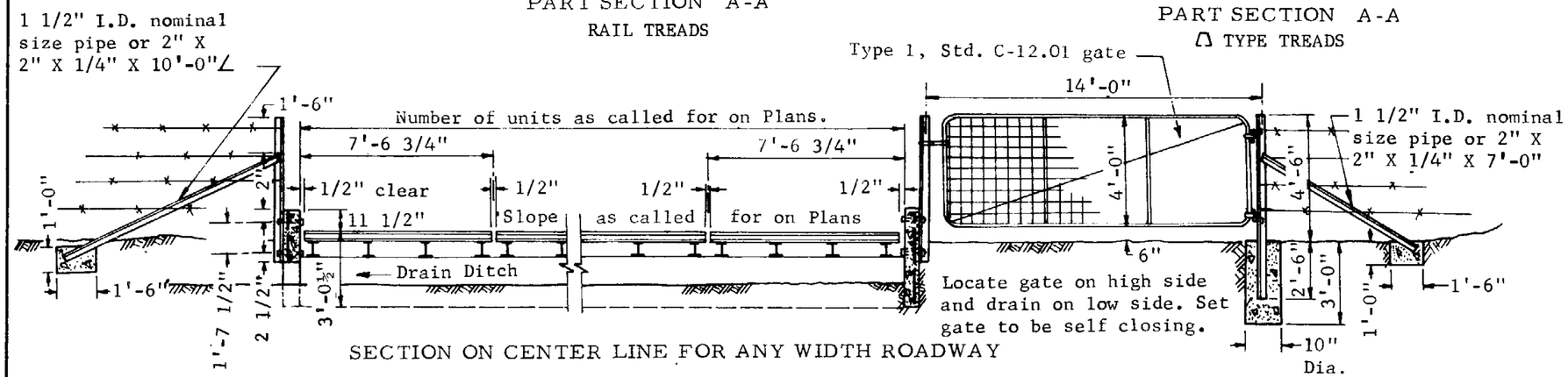

SECTION ON CENTER LINE FOR ANY WIDTH ROADWAY

MATERIAL LIST - CATTLE GUARD WITH GATE

Item	Pcs.	Size	Length	Steel#	Conc. C.Y.
Common to all guard lengths					
Post, Steel	3	See Std. C-12.01			
Braces, Steel	6	See Std. C-12.01			
Conc. for setting Post & Braces					0.17
Reinf. Bars	8	#4	11'-6"	61.50	
Reinf. Bars	8	#4	3'-6"	18.70	
7 Unit - 40' ROADWAY					17.86
Fabricated ∠	2	3"X3"X3/8"X52'-10"			
Web Belting	56	6"X6"X¼"			
6 Unit - 34' ROADWAY					15.60
Fabricated ∠	2	3"X3"X3/8"X45'-3½"			
Web Belting	48	6"X6"X¼"			
5 Unit - 26' ROADWAY					13.34
Fabricated ∠	2	3"X3"X3/8"X37'-9"			
Web Belting	40	6"X6"X¼"			
4 Unit - 20' ROADWAY					11.08
Fabricated ∠	2	3"X3"X3/8"X30'-2½"			
Web Belting	32	6"X6"X¼"			

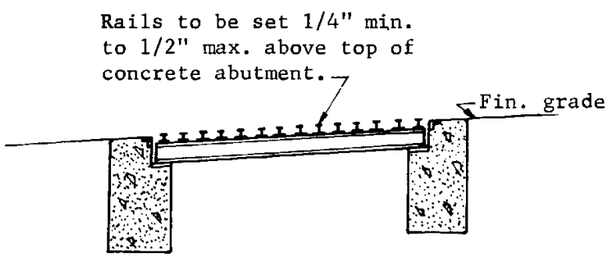

Section A-A showing relationship of top of concrete, and finished grade line.

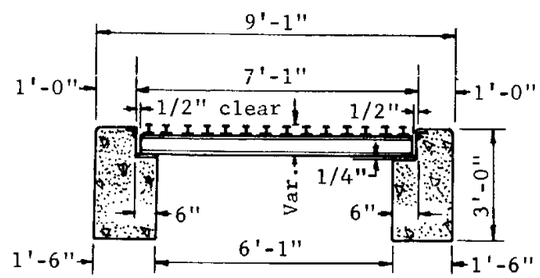

SECTION A-A

GENERAL NOTES

All concrete shall be Class A.

Used rails may be used providing they are clean, free from rust, of uniform cross section and weigh 25 lbs./ft. min.

All rails, structural steel, steel posts and braces shall be given one shop coat of No. 1 paint.

ARIZONA HIGHWAY DEPARTMENT
PLANS DIVISION

CATTLE GUARD

Drawn	12-58	Drawing No.
Traced	S.L.T. 5-67	C-11.01
Checked	J.P.O. 5-68	
Approved Engr. Plans	5-68	

Rev

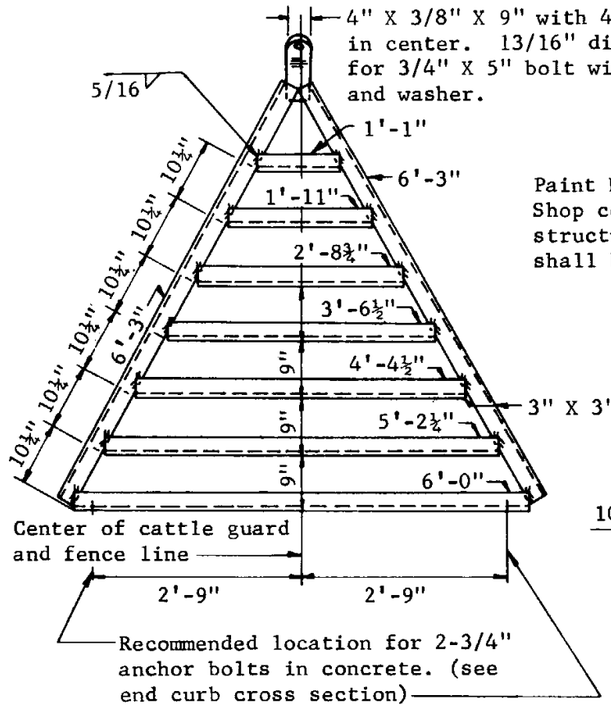

WELDED ANGLE END FRAME
2-required (one at each end)

Paint Note:
Shop coat - All rails, end frames, structural steel and steel posts shall be painted one coat Paint No. 1.

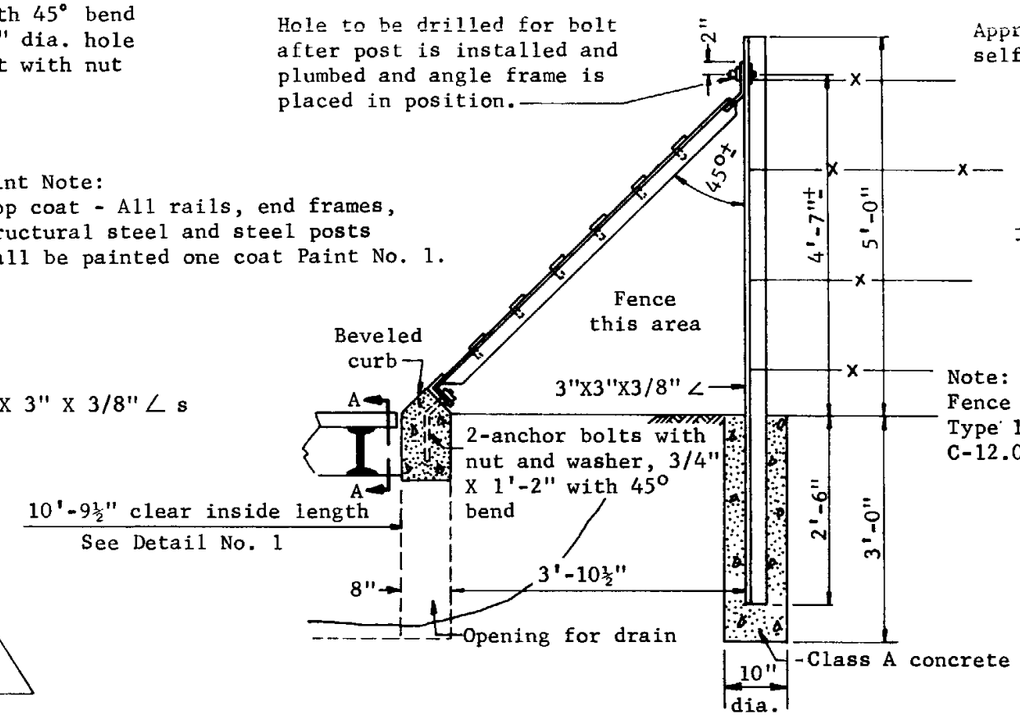

END CURB CROSS SECTION

Note:
Fence posts, braces and Type 1 Gate as per Std. C-12.01.

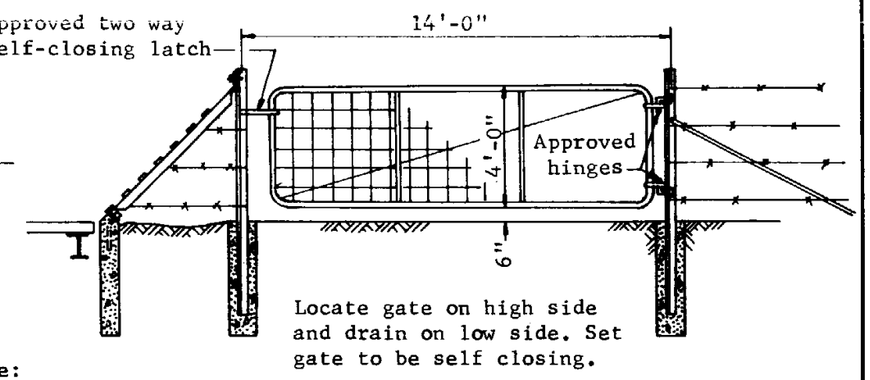

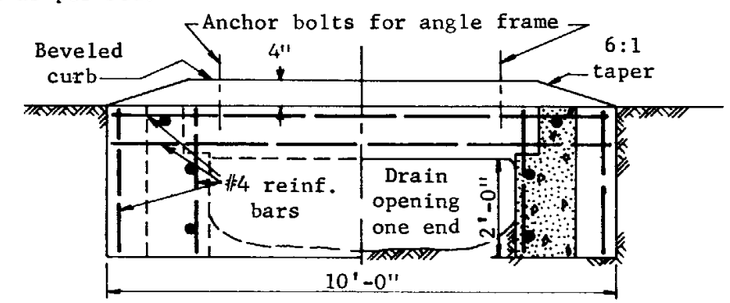

HALF END VIEW
(Closed end)

HALF END SECTION
(Looking toward open end)

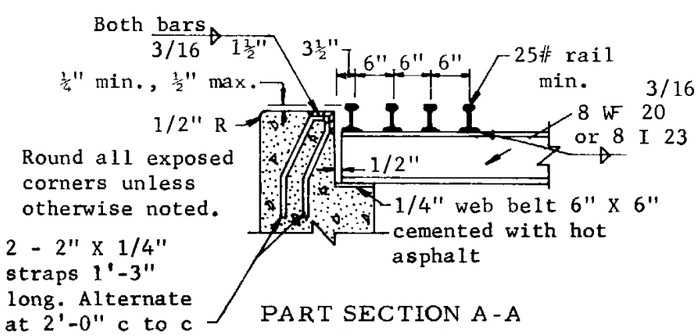

PART SECTION A-A
RAIL TREADS

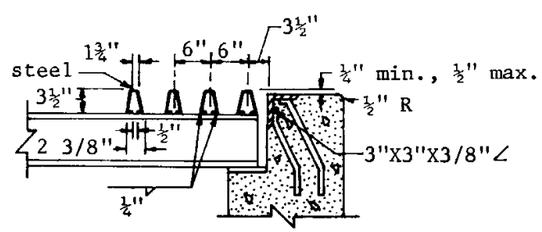

PART SECTION A-A
▲ TYPE TREADS

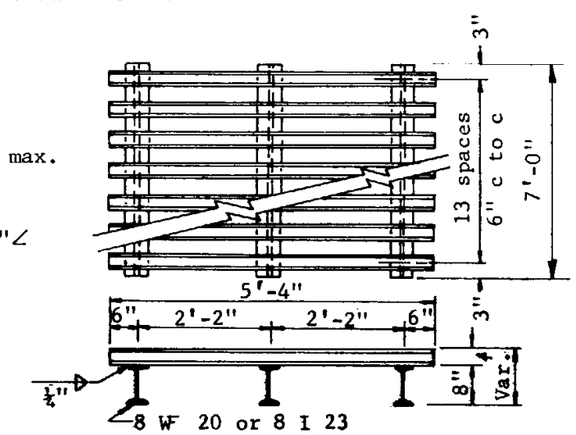

DETAIL OF WELDED GRILLE UNIT

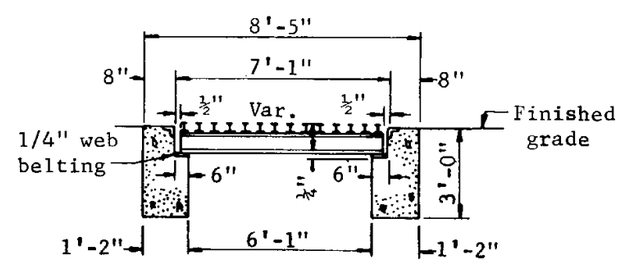

Top of concrete to conform with grade line.

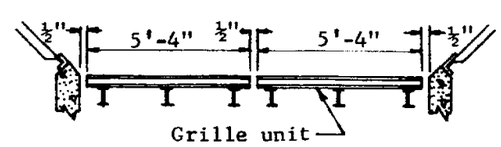

DETAIL NO. 1

MATERIAL LIST	Req'd.	
Fabricated ∠	2	3" X 3" X 3/8" X 10'-9 1/2"
Posts, for fence or gate	3	Same as Std. C-12.01 except as noted.
Bolts, with nut & washers	2	3/4" X 5" straight
Bolts, with nut & washers	4	3/4" X 1'-2", 45 bend mid point (anchor bolts)
Gate, with hinges & latch	1	Type 1 Gate for 14' opening, see Detail
Reinforcing bars	4	#4 bars X 8'-2" straight, aggregate weight, 22 lbs.
Reinforcing bars	8	#4 bars X 2'-10" straight, aggregate weight, 15 lbs.
Reinforcing bars	6	#4 bars X 11'-9" straight, aggregate weight, 47 lbs.
Std. welded grille unit	2	Approximate weight 2200 lbs.
Welded angle end frame	2	Approximate weight 560 lbs.
Web belting, grille shims	12	6" X 6" X 1/4".
Concrete	-	Class A. Total cubic yards 3.96 incl's setting 3 posts.

ARIZONA HIGHWAY DEPARTMENT
PLANS DIVISION

CATTLE GUARD - RANCH

FOR SIDEROAD ONLY

Drawn	L.D. 5-54	Drawing No.
Traced	S.L.T. 8-67	C-11.02
Checked	J.P.O. JPO 5-68	
Approved Engr. Plans	G Weidecker 5-68	

Rev

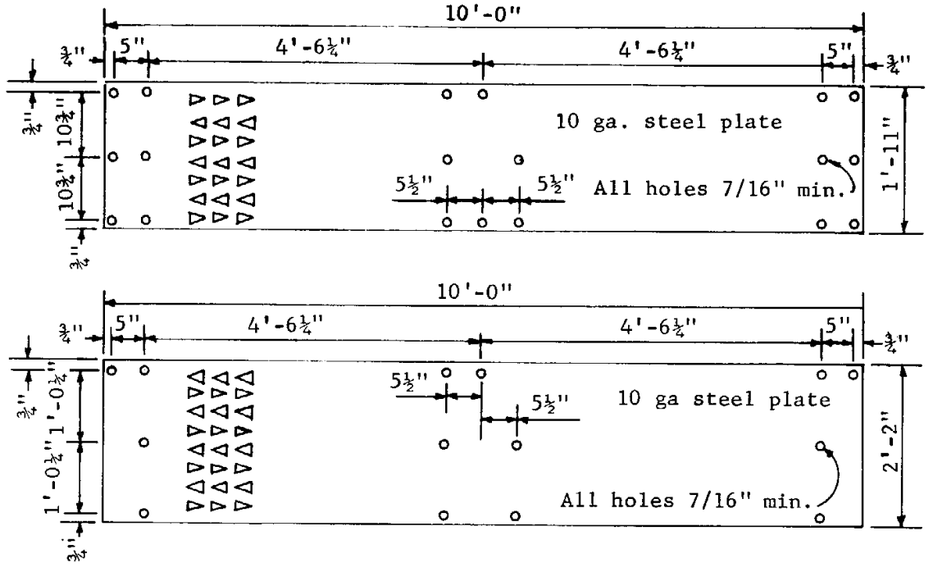

PLAN - 23" & 26" CATTLE GUARD PLATE

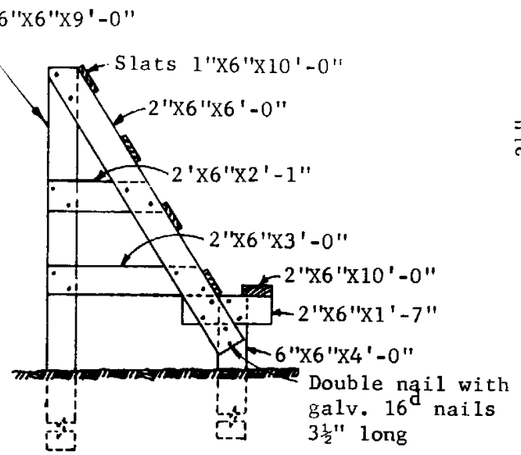

END FRAME TIMBER SIZES

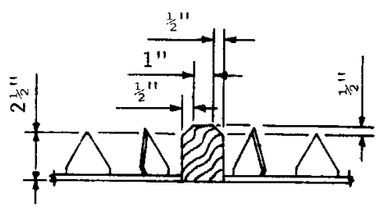

DETAIL-2" X 3" TIMBER BETWEEN ADJACENT PLATES

Fasten down with 3 -3/8" X 7" lag screws each piece

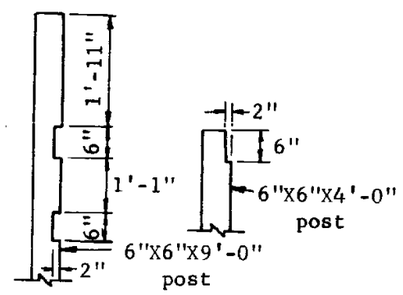

END FRAME POST NOTCH DETAIL

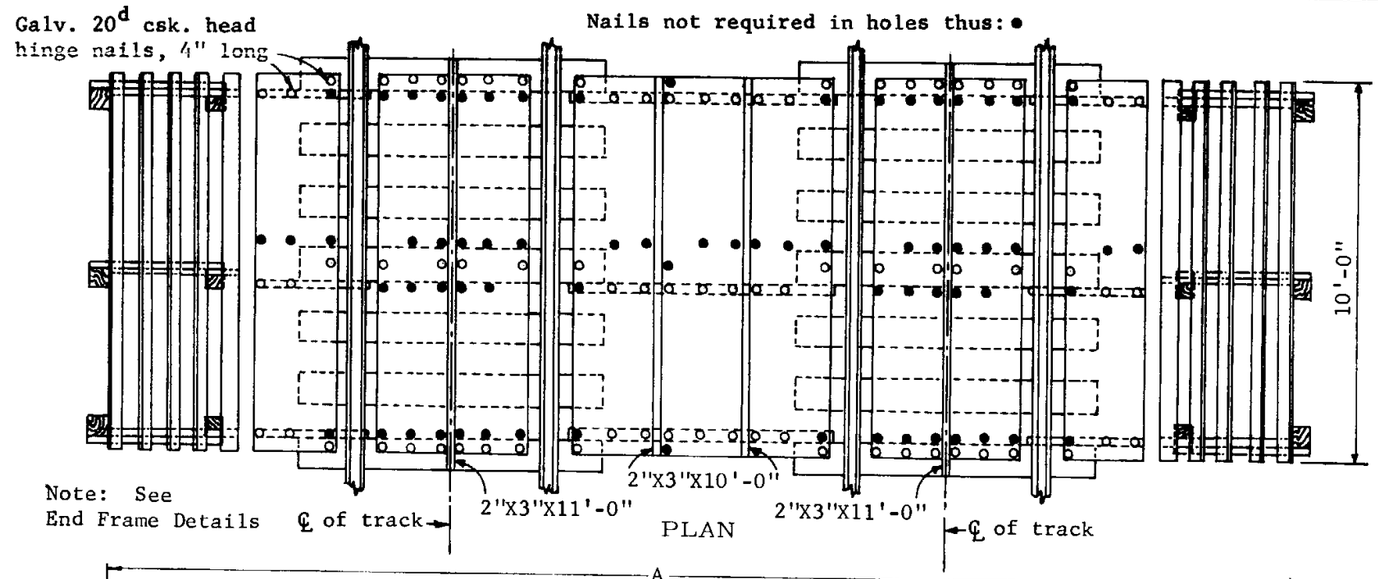

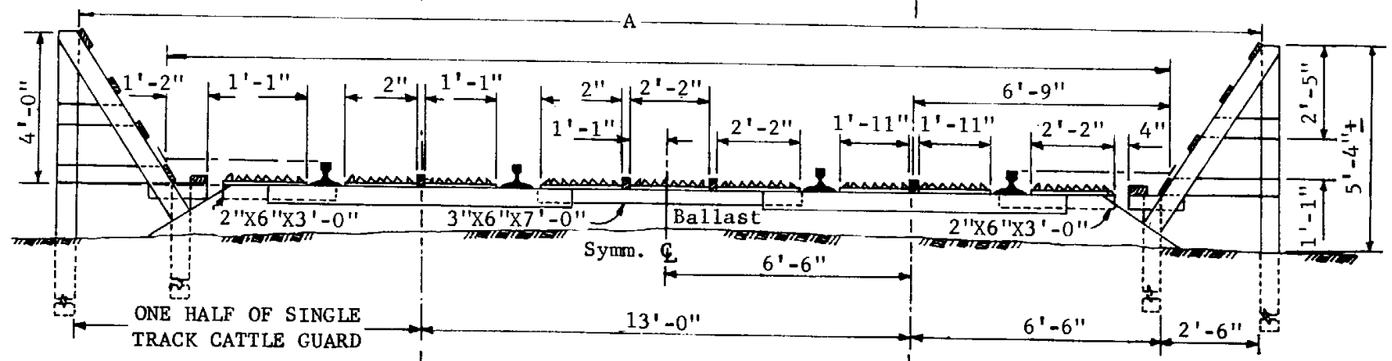

ELEVATION

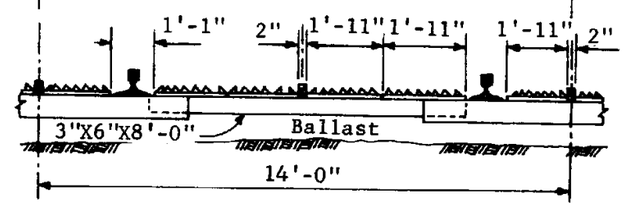

ELEVATION

GENERAL NOTES

The 2" X 6" & 3" X 6" timbers that are fastened to the ties and the 6" X 6" posts shall be pressure treated, rough and unpainted. The remaining timber shall be given one coat of No. 7 and one coat of No. 8 paint.

The metal plates shall be furnished with the manufacturer's shop coat of paint or shall be given one coat of No. 1 paint.

DIMENSIONS	A	B
Single Track	18'-0"	13'-6"
13' Track Centers	31'-0"	26'-6"
14' Track Centers	32'-0"	27'-6"

ARIZONA HIGHWAY DEPARTMENT
PLANS DIVISION

Rev

CATTLE GUARD RAILROAD

Drawn	D.G. 3-67	Drawing No.
Traced	S.L.T. 4-67	C-11.03
Checked	J.P.O. JPO 5-68	
Approved Engr. Plans	H Heidrich 5-68	

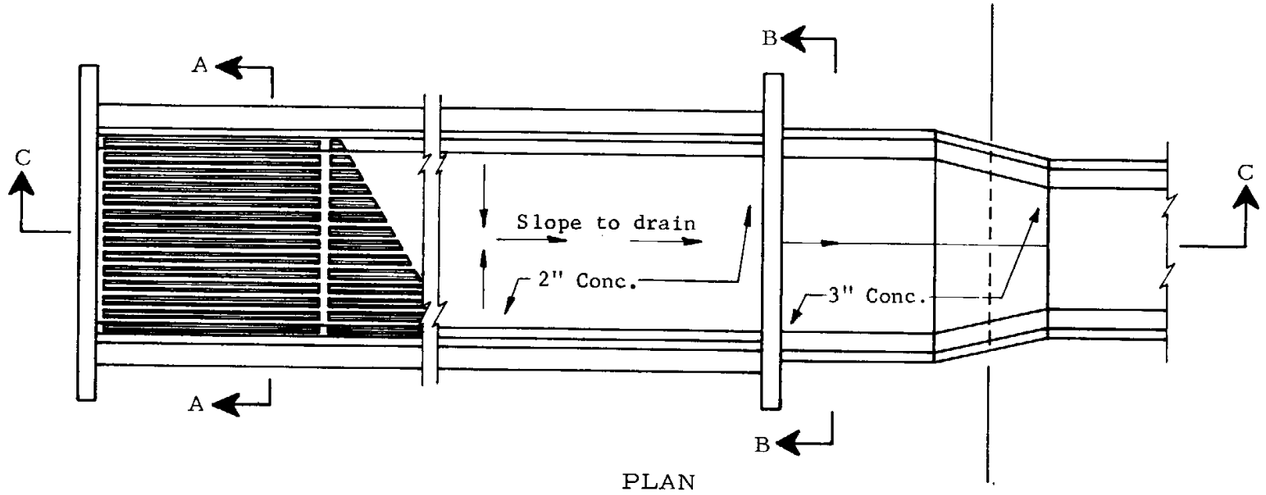

PLAN

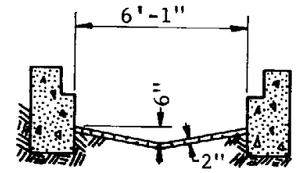

SECTION A-A

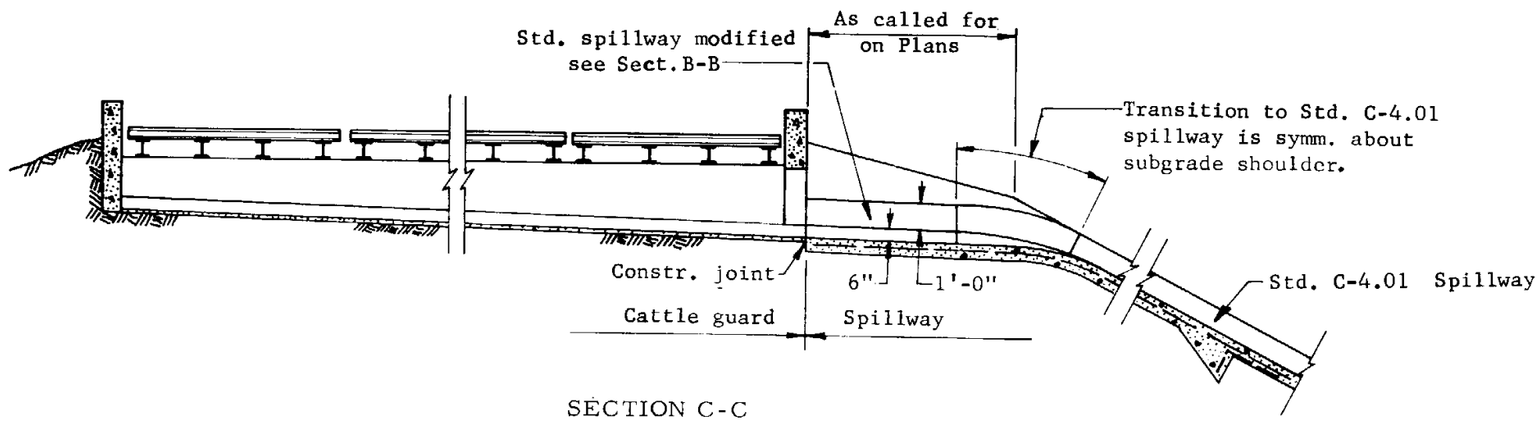

SECTION C-C
IN EMBANKMENT

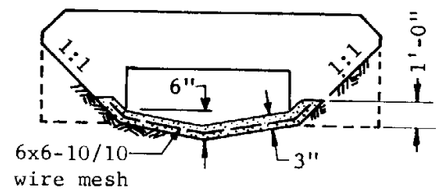

SECTION B-B

GENERAL NOTES

For all other cattle guard details, see Std. C-11.01.

This standard shall be used in embankment or where highly errodable soil is found.

All concrete shall be Class A.

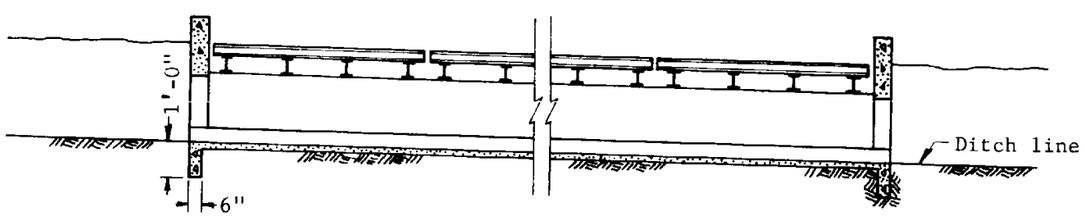

SECTION C-C

WHERE USED FOR THRU DRAINAGE-
CATTLE GUARD OPEN BOTH ENDS

ARIZONA HIGHWAY DEPARTMENT PLANS DIVISION			Rev
CATTLE GUARD DRAINAGE			
Drawn	M.C.T. 6-15-65	Drawing No.	
Traced	R.A.F. 5-5-67		
Checked	J.P.O. 5-68	C-11.04	
Approved Engr. Plans	5-68		

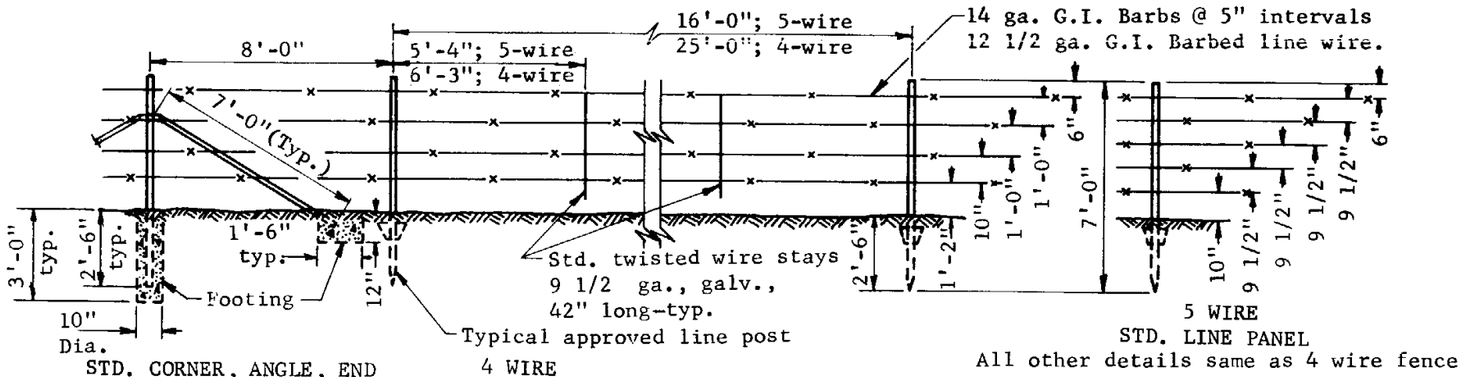

STD. CORNER, ANGLE, END OR INTERSECTION PANEL

4 WIRE STD. LINE PANEL

5 WIRE STD. LINE PANEL
All other details same as 4 wire fence

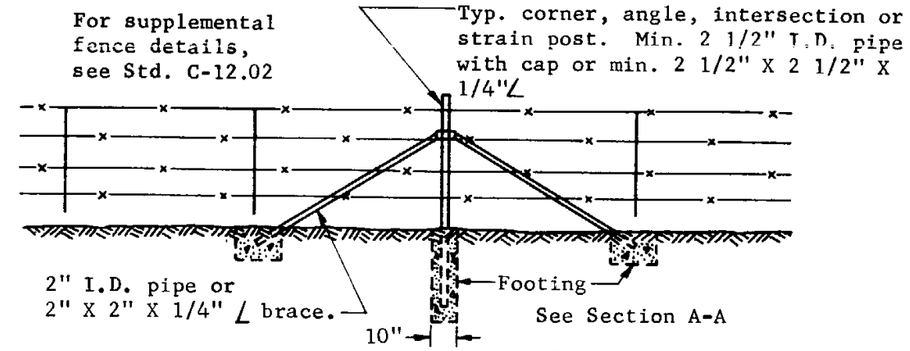

STANDARD STRAIN POST
To be spaced @ 650' max. intervals.

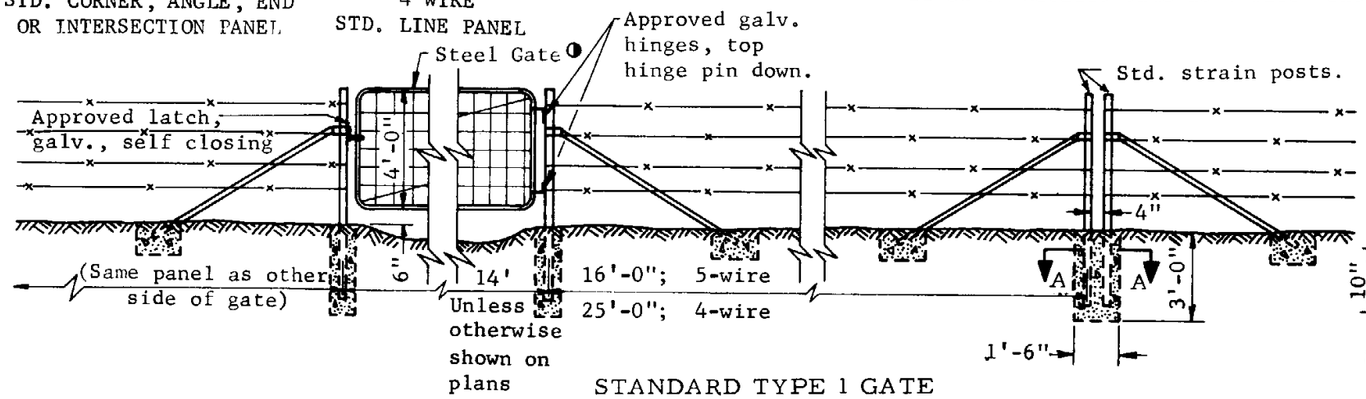

STANDARD TYPE 1 GATE
(Set gate to be self-closing)

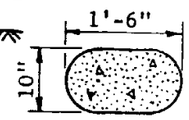

SECTION A-A

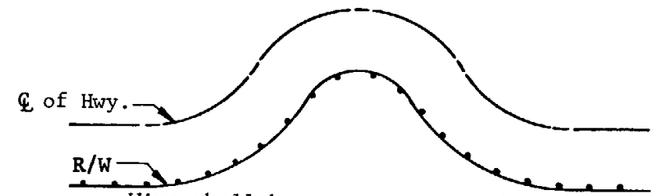

Wire shall be strung on opposite side of post from highway except on curves as shown.
No portion of fence shall extend outside of highway right of way line.

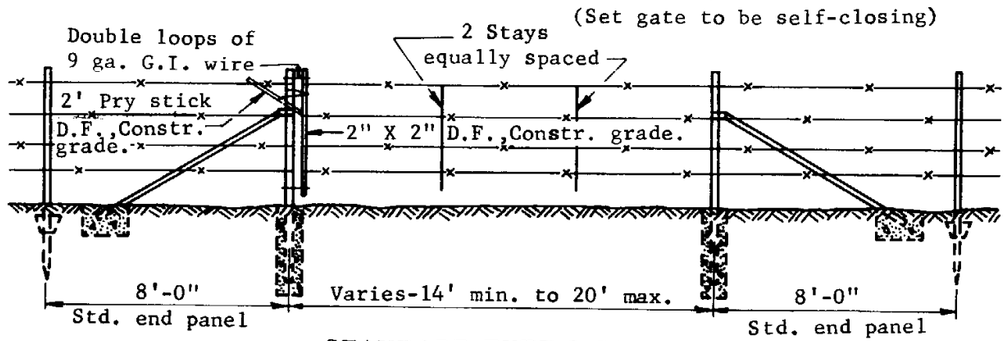

STANDARD TYPE 2 GATE

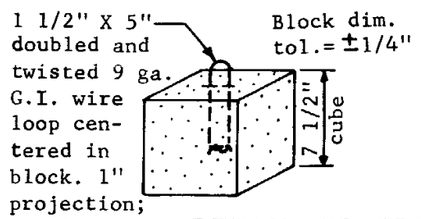

DETAIL—CONCRETE SAG WEIGHT

Where needed, hang 30-35# stone sag weights on doubled and twisted 9 ga. G.I. wire. As an alternate, use conc. sag weight. (See Detail)

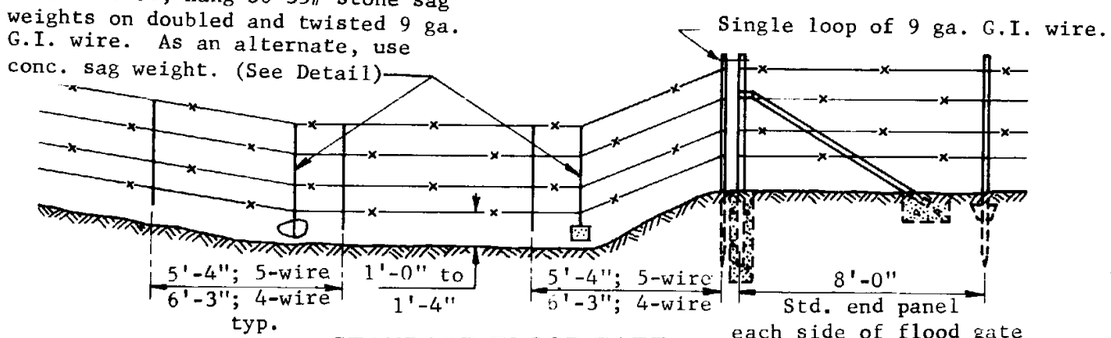

STANDARD FLOOD GATE
Length is Variable

Note:
When tubular post hangers and/or latches are used, hangers and/or latches shall be drilled for a single 3/32" Ø min. drive pin to prevent rotation of the hangers and latches.

TYPICAL STEEL LINE POST SECTIONS

◑ 1 3/8" ø tubing - 2 vert. braces. Mesh □, △, ◇ - 11 ga. line wires - 12 1/2 ga. crosswires. 1 - adjustable diagonal guy. Fully galvanized.

GENERAL NOTES

Posts and braces shall be green in color. Posts shall have white top. Wood parts of Type 2 gate shall be unpainted.

Line posts shall be "T", "U", "Rail", "Hat", or similar production sections except "Ells" or "Angles; shall weigh, exclusive of anchor, a min. of 1.3 #/ft. and shall be punched, knobbed or corrugated to hold wire firmly in position. Clamps of min. 11 ga. galv. wire shall be used to attach fence. Punched, lug type fasteners are not permitted.

Where anchor is omitted or post hole is drilled, posts must be set in concrete.

There may be a max. of two splices between strain posts but not on the same wire and no splice shall be placed within 100' of a strain, corner or gate post.

Post spacing shall be measured along top wire.
Angle is any deflection greater than 14°.
All concrete shall be Class A.

ARIZONA HIGHWAY DEPARTMENT PLANS DIVISION			Rev
LINE FENCE AND GATES STEEL POSTS			
Drawn	K. S. 6-1938	Drawing No.	
Traced	R.A.F 3-7-67	C-12.01	
Checked	J.P.O. JPO 5-68		
Approved Engr. Plans	J. Heidecker 5-68		

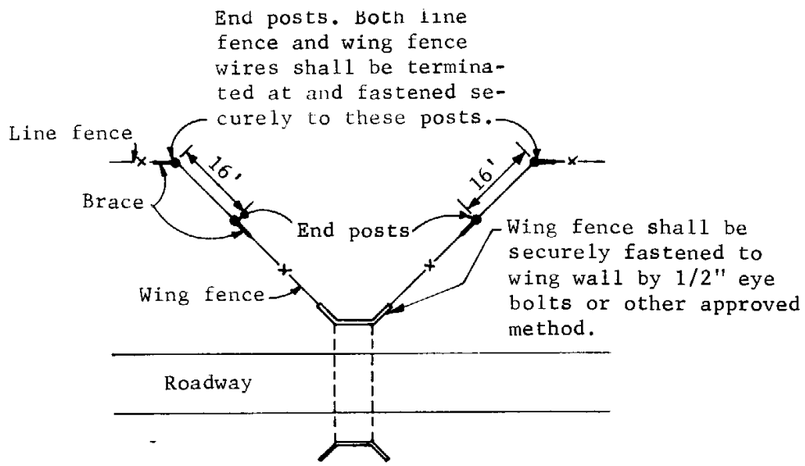

WING FENCE DETAIL

This detail shall be used where wing fences are called for on plans.

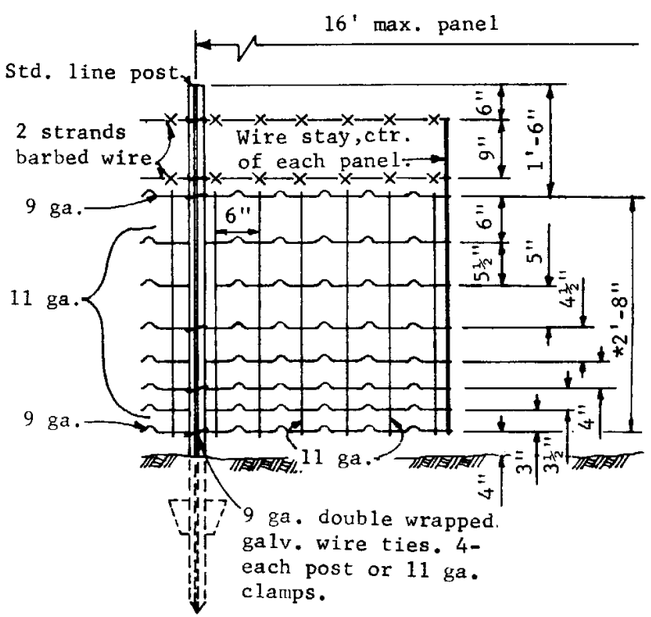

STOCK FENCE

*Rectangular mesh galv. stock fence.

WOOD POST FENCE-TYPE 1 or 2 GATE-4 or 5 WIRE

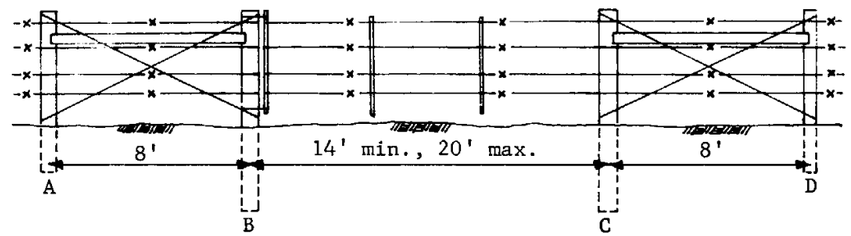

Existing Gate to be Removed

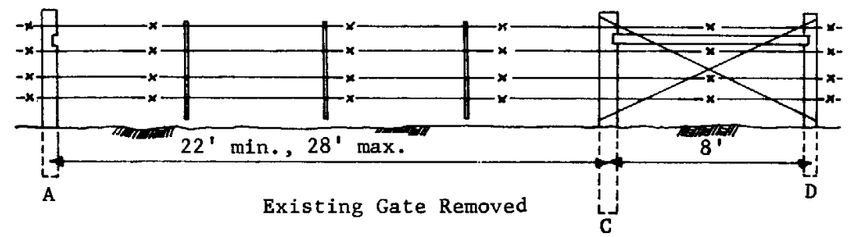

Existing Gate Removed

STD. C-12.01 FENCE-TYPE 1 or 2 GATE-4 or 5 WIRE

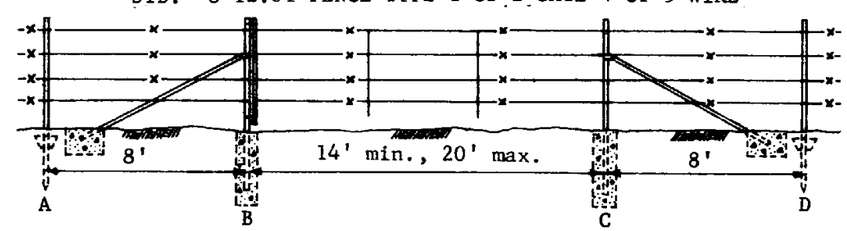

Existing Gate to be Removed

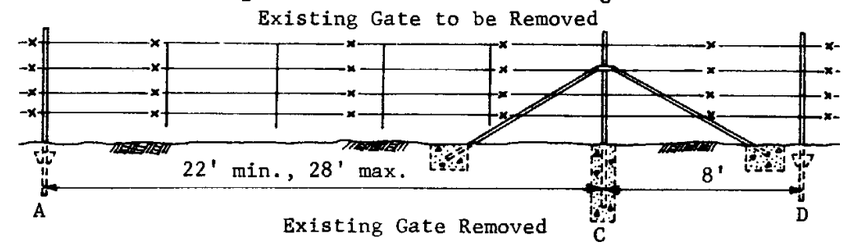

Existing Gate Removed

DETAIL FOR REMOVING EXISTING LINE GATES

Procedure: Remove gate and hardware and wire between posts A and C. Install new second brace at post C (Std. C-12.01 fence only). Stretch new wire between posts A and C. Remove post B and brace.
(Approved salvaged wire may be used.)
Staples for wood posts shall be 1 1/2" galvanized and fabricated from 9 gauge wire.

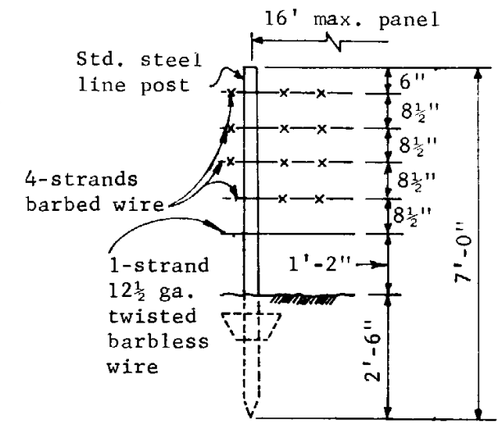

Drawn for 5-wire

GAME FENCE

4-wire game fence shall be constructed using standard 4-wire line fence spacing and substituting 12 1/2 ga. twisted, barbless wire for the bottom strand.

GENERAL NOTES

For any details not shown on this sheet, refer to Stds. C-12.01.

ARIZONA HIGHWAY DEPARTMENT PLANS DIVISION			Rev
SUPPLEMENTAL FENCE DETAILS			
Drawn	LOM, KS, DG-4-60	Drawing No.	
Traced	D.G. 3-67	C-12.02	
Checked	J.P.O. JPO 5-68		
Approved Engr. Plans	G.H. Heidecker 5-68		

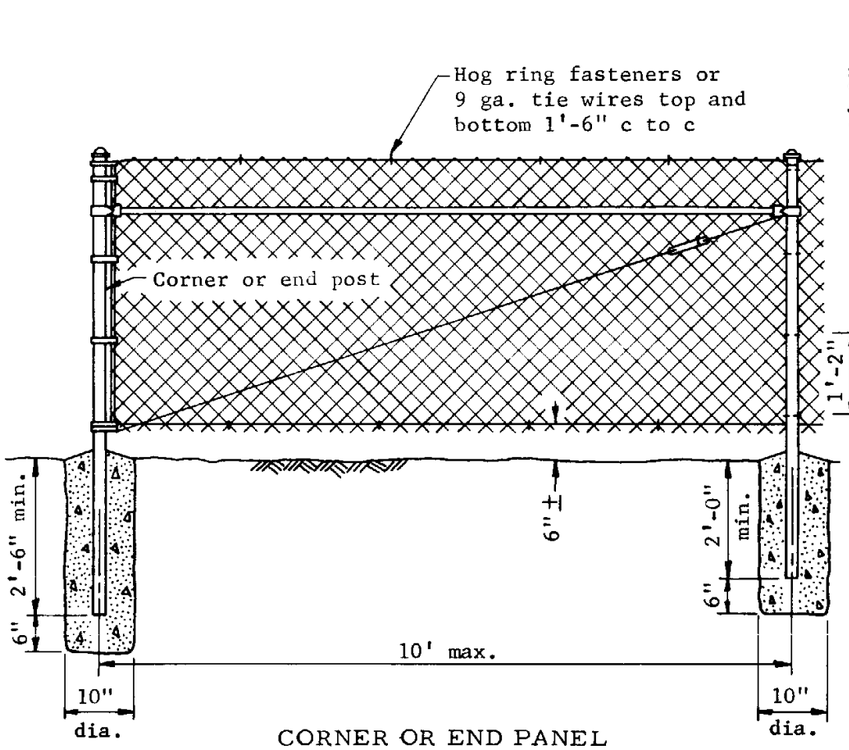

CORNER OR END PANEL

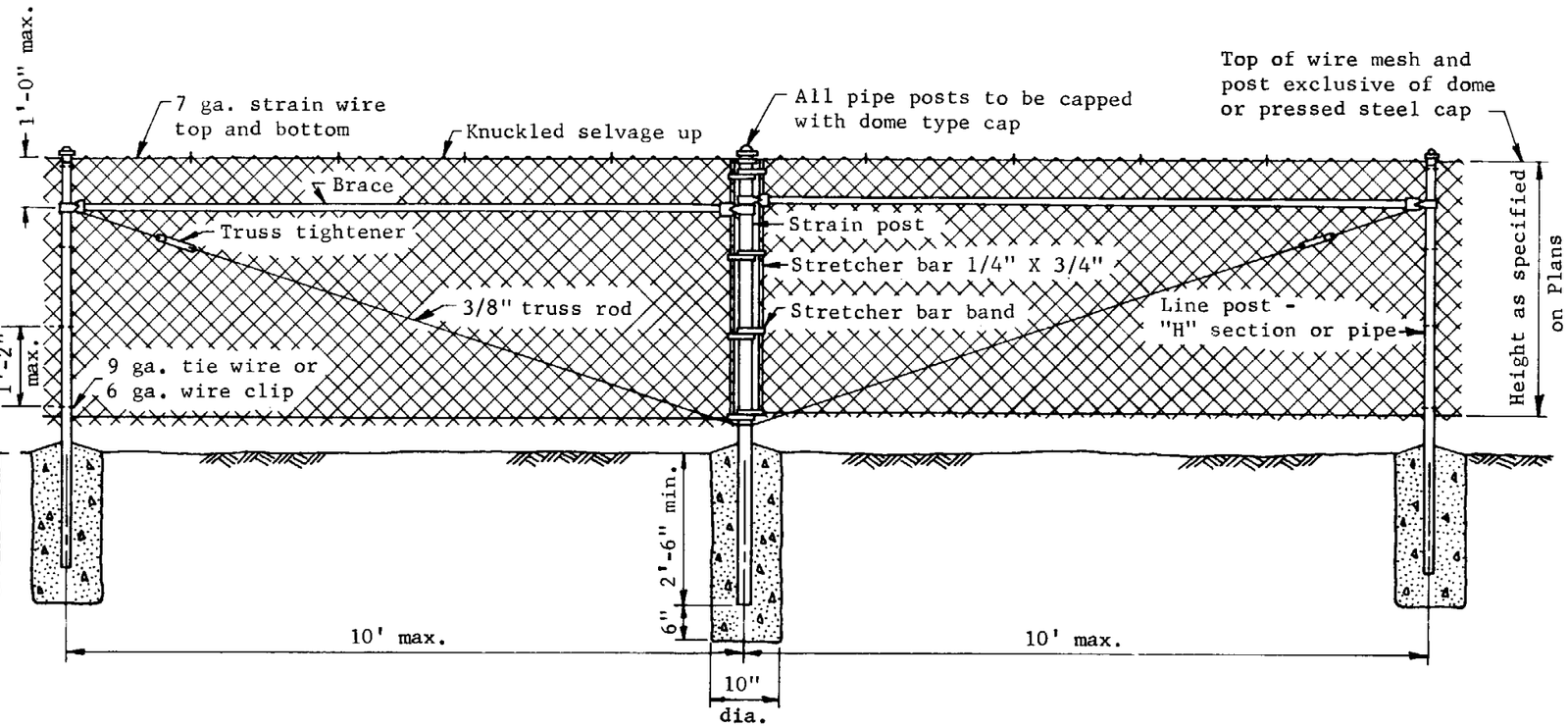

STRAIN PANEL

To be spaced at 500' maximum intervals

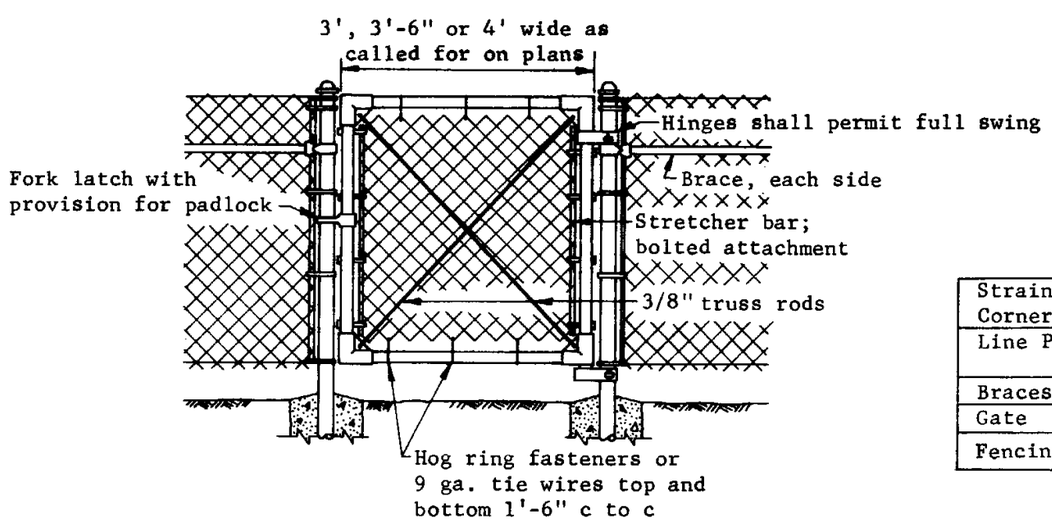

WALK GATE

Strain, End & Corner Posts	2" I.D. Nominal size pipe
Line Posts	1 1/2" I.D. Nominal size pipe "H" Sec. 1 7/8" X 1 5/8" Nominal size
Braces	1 1/4" I.D. Nominal size pipe
Gate	1 1/2" I.D. Nominal size pipe
Fencing	9 ga., 2" mesh fabricated wire

GENERAL NOTES

All concrete shall be Class A.

Gates shall be of welded or malleable cast or pressed steel fitting construction.

Fittings not specifically detailed shall be of approved heavy duty design.

"H" Section posts shall be capped with pressed steel top.

ARIZONA HIGHWAY DEPARTMENT
PLANS DIVISION

Rev

FENCE
CHAIN LINK

Drawn	L.O.M. 2-58	Drawing No.
Traced	R.A.F. 11-67	
Checked	J.P.O. JPO 5-68	C-12.03
Approved Engr. Plans	[illegible] 5-68	

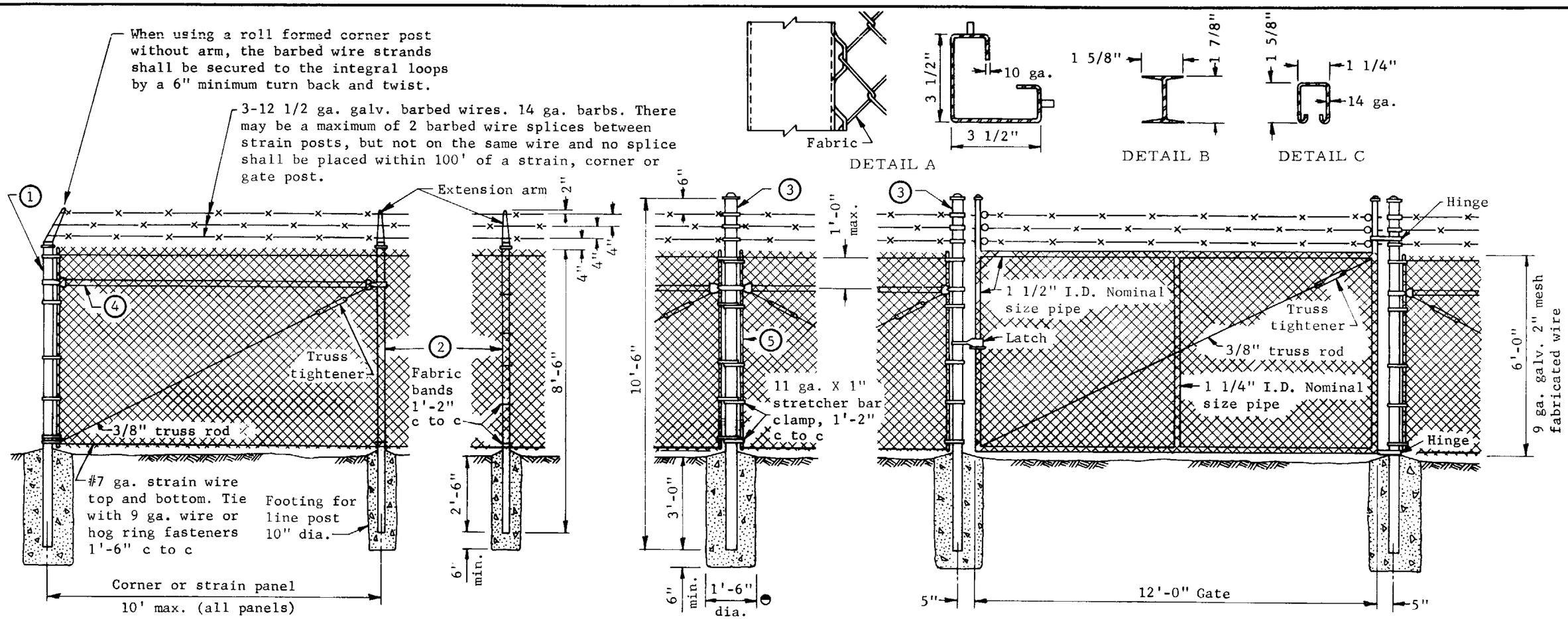

Footing for Strain, End, Corner and Gate Posts

Note: For Walk Gate, see Std. C-12.03.

Fencing shall be 9 ga., 2" mesh, fabricated wire.

Fence Using Pipe Members		
Member	Size	Lgth.
① Corner post	3 1/2" I.D. nominal pipe size	9'-0"
② Line post	1 1/2" I.D. nominal pipe size	8'-6"
③ Strain or gate post	3 1/2" I.D. nominal pipe size	10'-6"
④ Brace	1 1/4" I.D. nominal pipe size	as req'd.
⑤ Stretcher bar	1/4" x 3/4" flat	6'-2"
Fence Using Roll Formed Members		
① Corner post	5.14# /ft. section with integral fabric loops per Detail A or equal	9'-0"
② Line post	2.72# /ft. section per Detail B or equal	8'-6"
③ Strain or gate post	3 1/2" I.D. nominal pipe size	10'-6"
④ Brace	1.35# /ft. section per Detail C or equal	as req'd.
⑤ *Stretcher bar	1/4" X 3/4" flat	6'-2"

* Not used with corner post having integral fabric loops. (See Detail A)

GENERAL NOTES

All concrete shall be Class A.

Gates shall be of welded or malleable cast or pressed steel fitting construction.

Fittings not specifically detailed shall be of approved heavy duty design.

Strain posts shall be spaced at 500' maximum intervals and both corner and strain posts shall have strain panels each side.

All pipe posts shall be capped.

ARIZONA HIGHWAY DEPARTMENT
PLANS DIVISION

Rev

FENCE-INDUSTRIAL TYPE, FABRICATED WIRE

Drawn	L.O.M. 3-65	Drawing No.
Traced	R.A.F. 1-68	C-12.04
Checked	J.P.O. JPO 5-68	
Approved Engr. Plans	G. Weidecker 5-68	

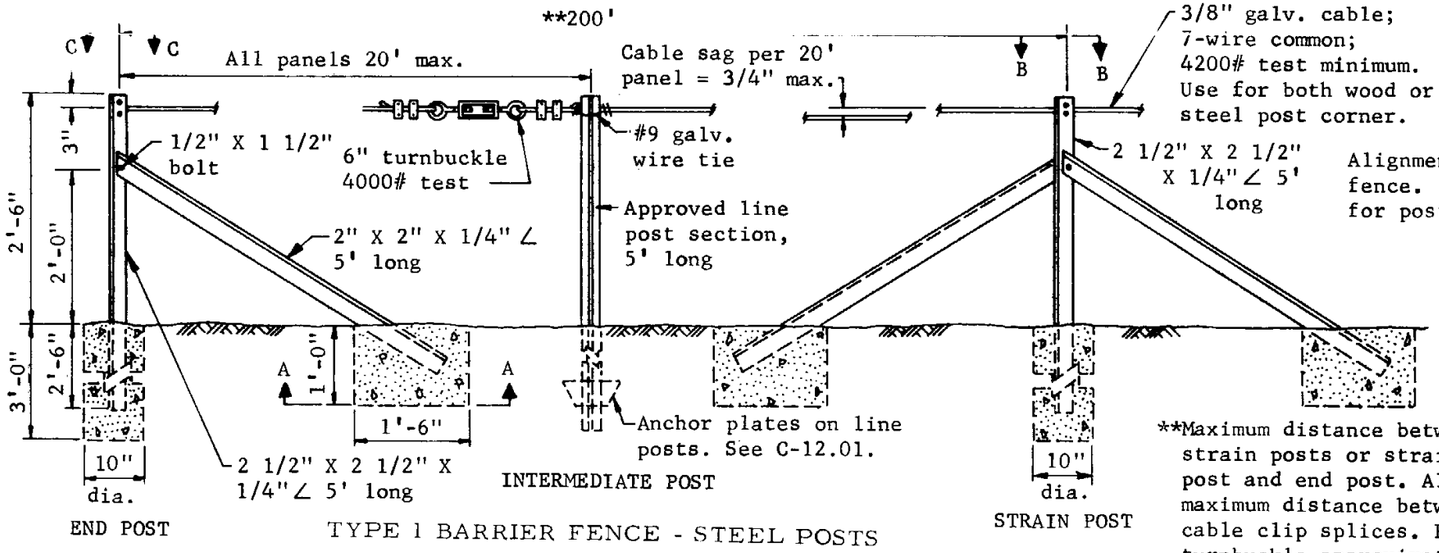

TYPE 1 BARRIER FENCE - STEEL POSTS

**Maximum distance between strain posts or strain post and end post. Also, maximum distance between cable clip splices. Place turnbuckle approximately midway between cable clip splices.

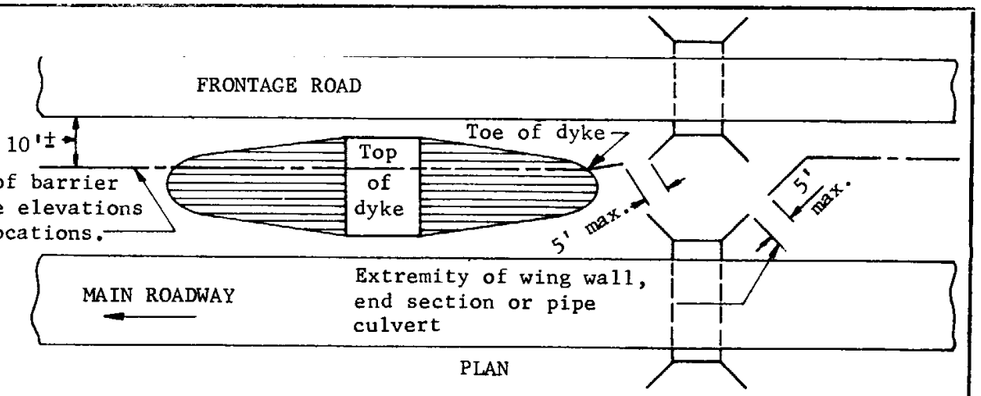

PLAN

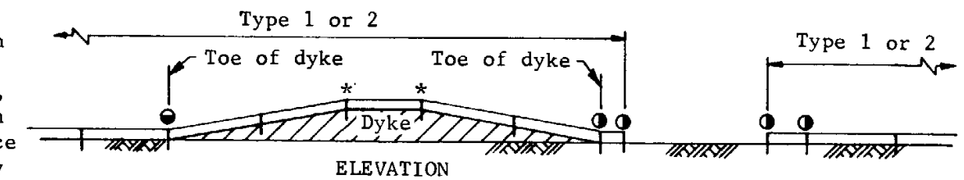

ELEVATION

For Type 1 or Type 2 - 6:1 slope only

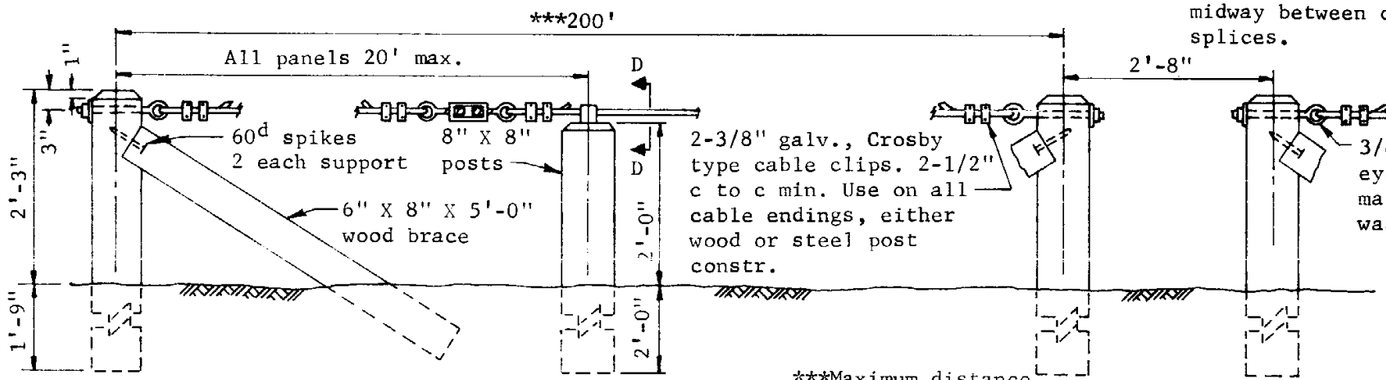

TYPE 2 BARRIER FENCE
WOOD POSTS

***Maximum distance between end post and cable splices. Place turnbuckle approximately midway between end posts.

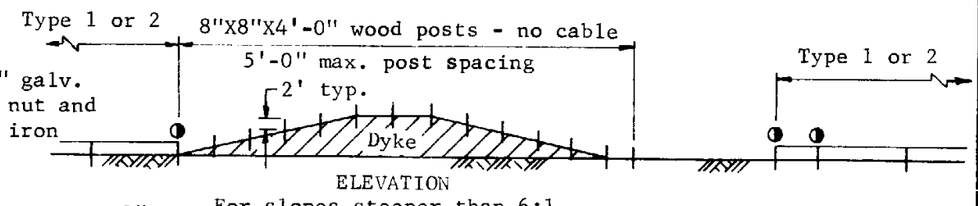

ELEVATION

For slopes steeper than 6:1

* Required location of line post
◑ Required location of end post
◒ Required location of strain post

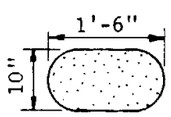

SECTION A-A

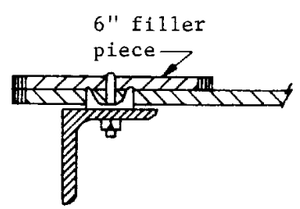

SECTION C-C

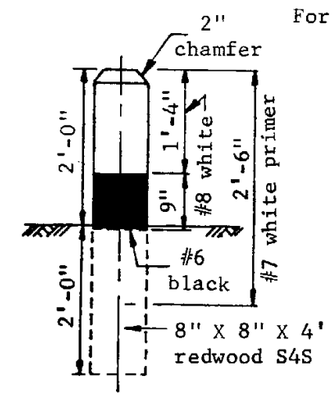

BARRIER POST

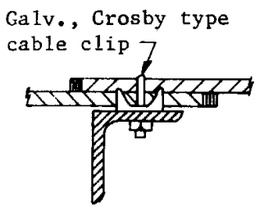

SECTION B-B

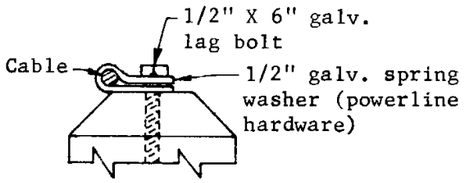

SECTION D-D

GENERAL NOTES

All concrete shall be Class A.

Wood posts for barrier fence shall be rough, pressure treated.

Steel posts for barrier fence shall be painted green with white tops.

Barrier posts shall be S4S redwood, untreated.

All cable ends shall be wrapped with galvanized tie wire in accordance with the cable manufacturer's recommendations.

Barrier fence shall be used only to prevent crossings between roadways and shall not be used where guard rail is required or where physical barriers are present.

ARIZONA HIGHWAY DEPARTMENT
PLANS DIVISION

BARRIER FENCE AND BARRIER POST

Drawn	D.G. 10-66	Drawing No.
Traced	S.L.T. 10-67	C-12.05
Checked	J.P.O. JPO 5-68	
Approved Engr. Plans	G Heidecker 5-68	

Rev

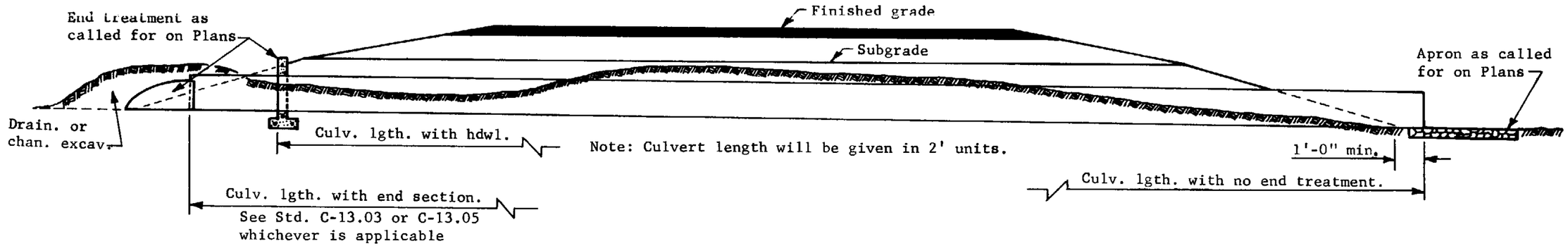

EMBANKMENT INSTALLATION

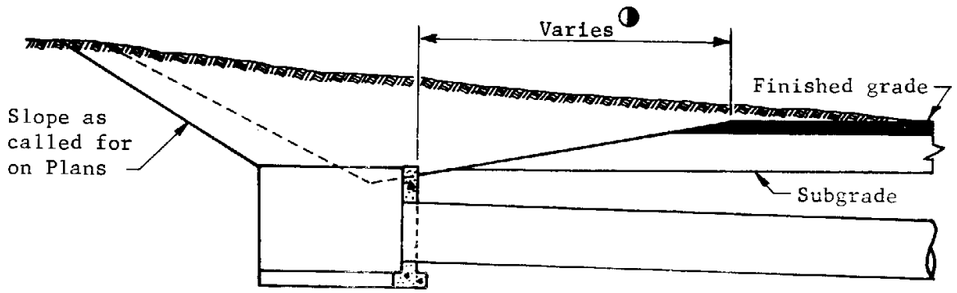

CUT INSTALLATION

◑ Width of cut ditch minus 1'-0".

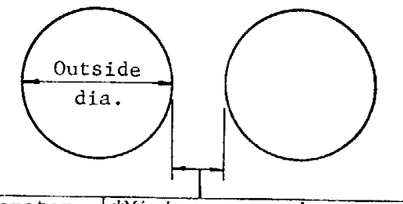

Diameter	*Minimum space between pipes
12" to 24"	1'-0"
30" to 66"	One-half diameter of pipe
72" to 84"	3'-0"

*When headwalls are used, space as per headwall standard.

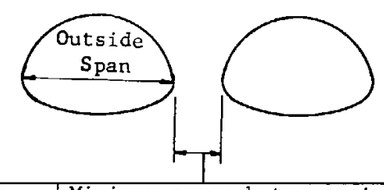

Span	Minimum space between pipe arches
18" to 36"	1'-0"
43" to 72"	One-third span of pipe arch

SPACING FOR MULTIPLE INSTALLATIONS

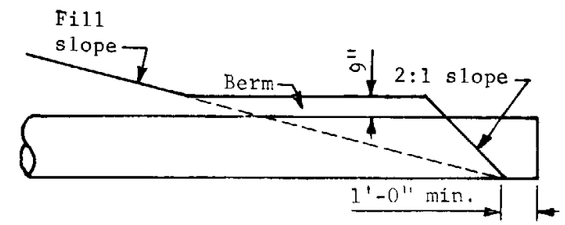

Side Elevation

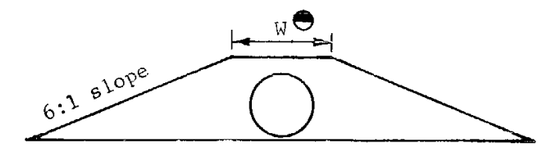

End Elevation

◓ W for outlet end = 4' + pipe dia.

Berm shall be constructed as noted on plans.

GENERAL NOTES

Additional excavation shall be required, as shown in Figure A, when headwalls are located in a cut ditch.

Headwall shall not extend more than 3" above the embankment slope and in no case above the shoulder elevation.

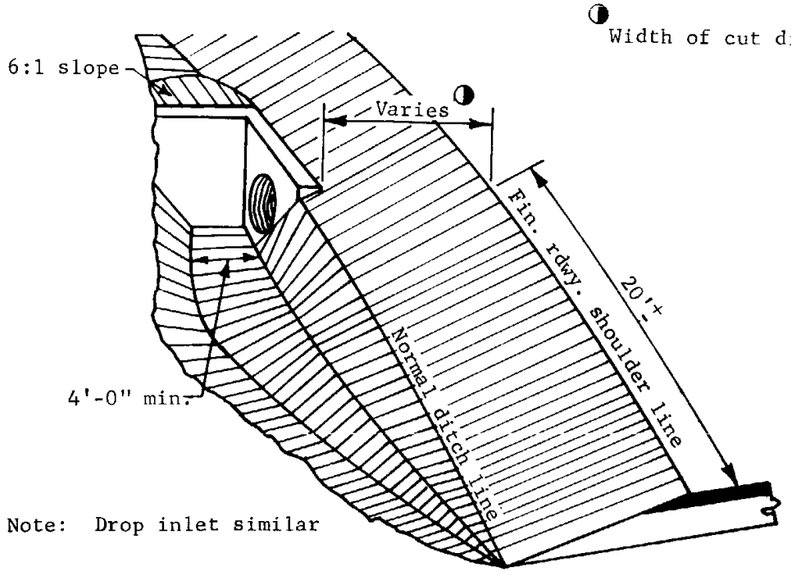

Note: Drop inlet similar

FIGURE A

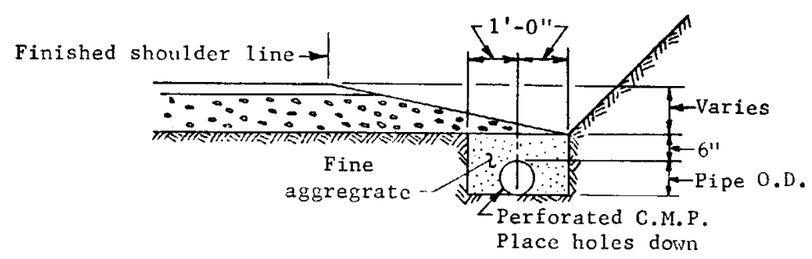

PERFORATED C.M.P. INSTALLATION

ARIZONA HIGHWAY DEPARTMENT PLANS DIVISION		Rev
PIPE CULVERT INSTALLATION		
Drawn	D.G. 3-68	Drawing No.
Traced	D.G. 3-68	C-13.01
Checked	J.P.O. JPO 5-68	
Approved Engr. Plans	G Heidecker 5-68	

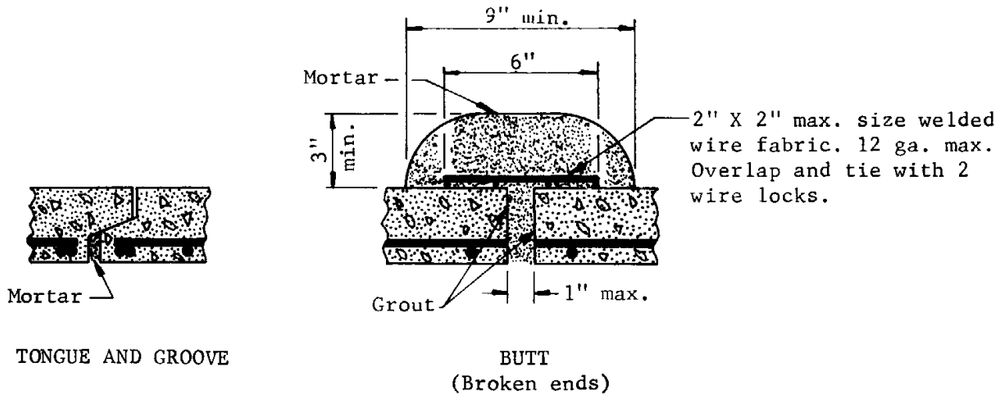

MORTAR JOINTS

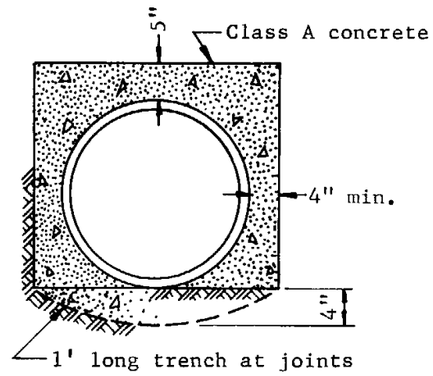

CONCRETE ENCASEMENT

GENERAL NOTES

Rubber gasketed joints shall be used on irrigation and storm sewer lines unless mortar joints are specified.

Cross drains with tongue and groove joints will not require external mortar bands.

For minimum cover and maximum fill heights on concrete pipes, refer to Std. C-13.03.

In the type I placement the contractor may elect to place the embankment first and then excavate a trench for the pipe - No Pay Item.

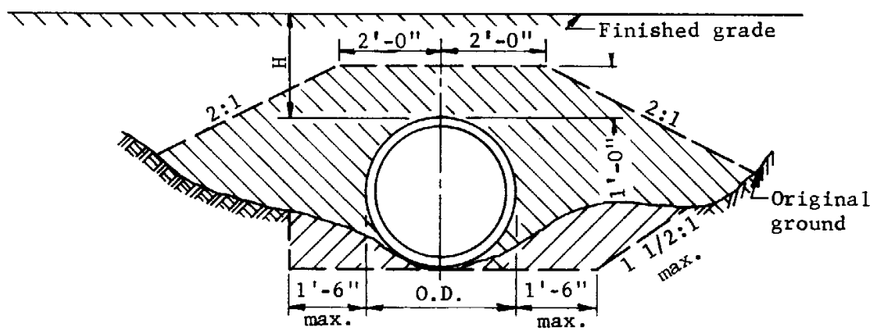

TYPE 1 - POSITIVE PROJECTING

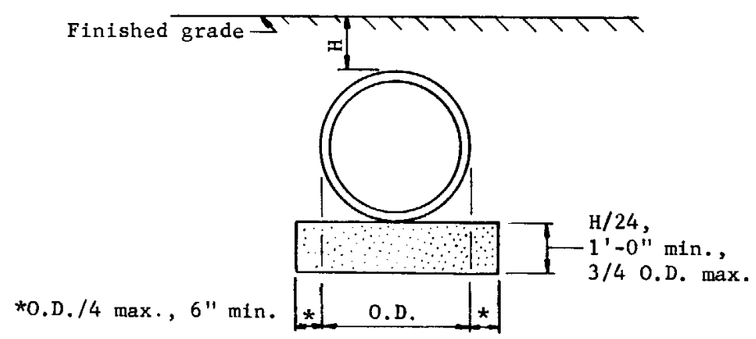

SOLID ROCK OR OTHER UNYIELDING MATERIAL

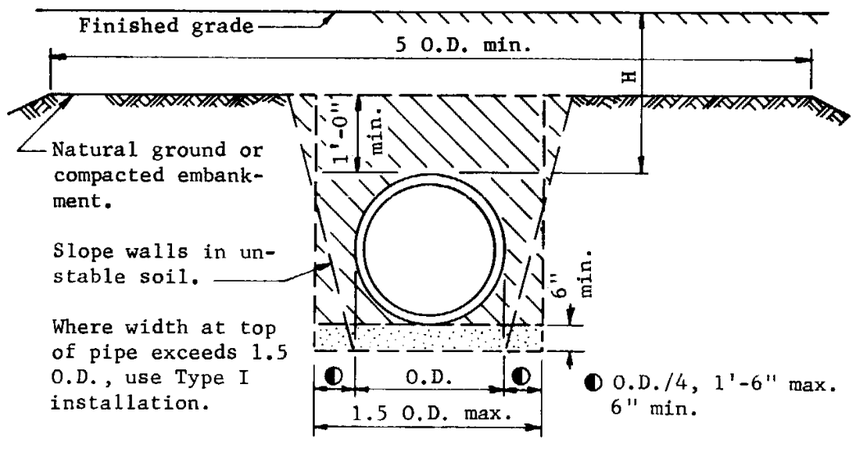

TYPE 2 - NEGATIVE PROJECTING

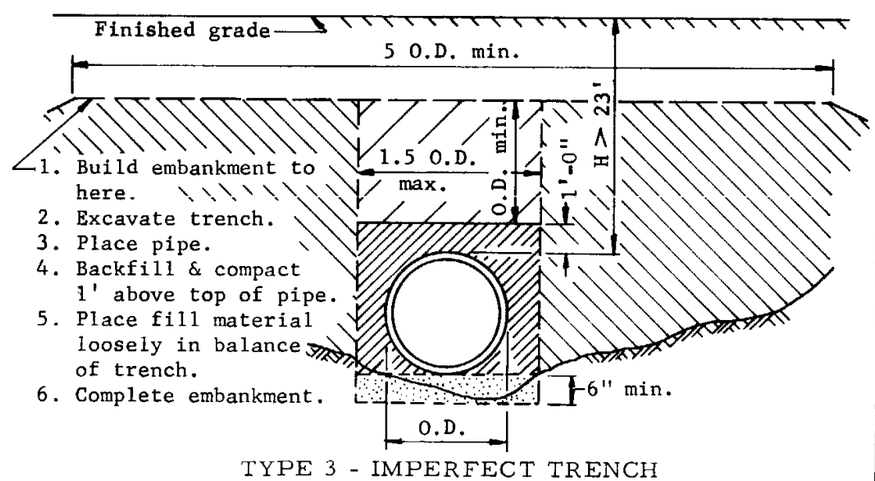

TYPE 3 - IMPERFECT TRENCH

ARIZONA HIGHWAY DEPARTMENT
PLANS DIVISION

REINFORCED CONCRETE PIPE PLACEMENT

Drawn	R.E.W. 3-58	Drawing No.
Traced	S.L.T. 7-67	C-13.02
Checked	J.P.O. JPO 5-68	
Approved Engr. Plans	G. Weidenbach 5-68	

Rev

HORIZONTAL ELLIPTICAL PIPE										
Size	Area of Open'g	HE II Crack D Load 1000			HE III Crack D Load 1350			HE IV Crack D Load 2000		
		Min.	Type (1)	Type (2)	Min.	Type (1)	Type (2)	Min.	Type (1)	Type (2)
14 x 23	1.8				2	13	20	1	20	NL
19 x 30	3.3				2	13	15	1	20	NL
22 x 34	4.1				2	13	15	1	20	40
24 x 38	5.1	2	10	10	2	13	15	1	20	30
27 x 42	6.3	2	10	10	2	13	13	1	20	25
29 x 45	7.4	2	10	10	2	13	13	1	20	25
32 x 49	8.8	2	10	10	1	13	13	1	20	22
34 x 53	10.2	2	10	10	1	13	13	1	20	22
38 x 60	12.9	2	10	10	1	13	13	1	20	22
43 x 68	16.6	1	10	10	1	13	13	1	20	22
48 x 76	20.5	1	10	10	1	13	13	1	20	22
53 x 83	24.8	1	10	10	1	13	13	1	20	22
58 x 91	29.5	1	10	10	1	13	13	1	20	22
63 x 98	34.6	1	10	10	1	13	13	1	20	22
68 x106	40.1	1	10	10	1	13	13	1	20	22

VERTICAL ELLIPTICAL PIPE																						
Size	Area of Open'g	VE II Crack D Load 1000			VE III Crack D Load 1350				VE IV Crack D Load 2000				VE V Crack D Load 3000				VI Crack D Load 4000			
		Min.	Type (1)	Type (2)	Min.	Type (1)	Type (2)	Type (3)	Min.	Type (1)	Type (2)	Type (3)	Min.	Type (1)	Type (2)	Type (3)	Min.	Type (1)	Type (2)	Type (3)
45 x 29	7.4	2	15	15	2	23	40	88	1	35	NL	NL	1	NL	NL	NL	1	NL	NL	NL
49 x 32	8.8	2	15	15	2	18	30	78	1	28	NL	NL	1	NL	NL	NL	1	NL	NL	NL
53 x 34	10.2	2	15	15	2	18	25	70	1	27	NL	85	1	NL	NL	NL	1	NL	NL	NL
60 x 38	12.9	2	15	15	2	18	20	70	1	27	55	80	1	65	NL	NL	1	75	NL	NL
68 x 43	16.6	2	15	15	2	18	20	70	1	27	40	80	1	50	NL	NL	1	55	NL	NL
76 x 48	20.5	2	15	15	2	18	18	70	1	27	35	77	1	40	NL	NL				
83 x 53	24.8	2	15	15	2	18	18	70	1	27	30	77	1	35	NL	NL				
91 x 58	29.5	2	15	15	2	18	18	70	1	27	30	74								
98 x 63	34.6	2	15	15	2	18	18	70	1	27	30	74								
106 x 68	40.1	2	15	15	2	18	18	70	1	27	30	74								

NOTE: NL indicates no limit.

ROUND PIPE																			
Size	Area of Open'g	CLASS I Crack D Load 800			CLASS II Crack D Load 1000			CLASS III Crack D Load 1350				CLASS IV Crack D Load 2000				CLASS V Crack D Load 3000			
		Min.	Type (1)	Type (2)	Min.	Type (1)	Type (2)	Min.	Type (1)	Type (2)	Type (3)	Min.	Type (1)	Type (2)	Type (3)	Min.	Type (1)	Type (2)	Type (3)
12	0.8	3	8	9	3	11	14	3	40	NL	NL	2	NL	NL	NL	1	NL	NL	NL
15	1.2	3	8	9	3	11	14	3	30	NL	NL	2	60	NL	NL	1	NL	NL	NL
18	1.8	3	8	9	3	11	14	3	25	NL	NL	2	40	NL	NL	1	NL	NL	NL
21	2.4	3	8	9	3	11	14	2	20	30	44	1	30	NL	NL	1	NL	NL	NL
24	3.1	3	8	9	3	11	11	2	15	20	39	1	25	NL	NL	I	NL	NL	NL
30	4.9	3	8	9	3	11	11	2	15	20	35	1	23	NL	65	I	60	NL	NL
36	7.1	3	8	9	3	11	11	2	15	15	35	1	23	40	62	I	45	NL	NL
42	9.6	3	8	9	2	11	11	2	15	15	35	1	23	30	62	1	35	NL	NL
48	12.6	3	8	9	2	11	11	2	15	15	35	1	23	26	59	1	32	NL	100
54	15.9	3	8	9	2	11	11	2	15	15	35	1	23	24	59	1	32	60	95
60	19.6	3	8	9	2	11	11	2	15	15	35	1	23	23	57	1	32	48	90
66	23.8	3	8	9	2	11	11	2	15	15	35	1	23	23	57	1	32	47	85
72	28.3	3	8	9	2	11	11	2	15	15	35	1	23	23	57	1	32	43	85
78	33.2	3	8	9	2	11	11	2	15	15	35	1	23	23	57	1	32	43	85
84	38.5	3	8	9	2	11	11	2	15	15	35	1	23	23	57	1	32	43	85
90	44.2	3	8	9	2	11	11	2	15	15	34	1	23	23	56	1	32	43	85
96	50.3	3	8	9	2	11	11	2	15	15	33	1	23	23	54	1	32	43	80
102	56.7	3	8	9	2	11	11	2	15	15	31	1	23	23	52	1	32	43	80
108	63.6	3	8	9	2	11	11	2	15	15	30	1	23	23	50	1	32	43	80

GENERAL NOTES

All fill heights are measured in feet from finished grade to top of pipe.

Minimum fill heights shall be as noted except no pipe shall extend above subgrade.

For cases not covered hereon, special designs may be prepared.

Type refers to type of placement.

For other details see Std. C-13.02.

ARIZONA HIGHWAY DEPARTMENT
PLANS DIVISION

Rev

FILL HEIGHTS FOR REINFORCED CONCRETE PIPE

Drawn	J.P.O. 7-65	Drawing No.
Traced	S.L.T. 8-67	C-13.03
Checked	J.P.O. JPO 5-68	
Approved Engr. Plans	G Weicheber 5-68	

PIPE DIA.	APPROX. WEIGHT	DIMENSIONS - INCHES						APPROX. SLOPE
		T	A	B	C	E	F	
24	1520#	3	9½	43½	30	73½	48	3
27	1930#	3¼	10½	49½	24	73½	54	3
30	2190#	3½	12	54	19¾	73¾	60	3
36	4100#	4	15	63	34¾	97¾	72	3
42	5380#	4½	21	63	35	98	78	3
48	6550#	5	24	72	26	98	84	3
54	8240#	5½	27	65	33¼	98½	90	2½

GENERAL NOTES

Design of end section shall conform to standards for reinforced concrete pipe.

End section joint conformation shall match the pipe joints.

Embankment slope shall be warped to match slope of end section.

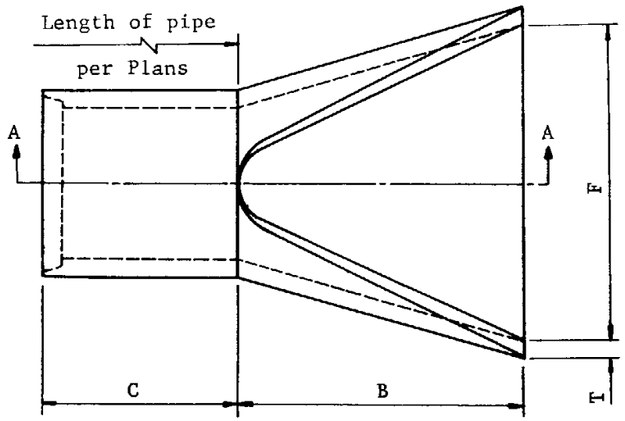

PLAN

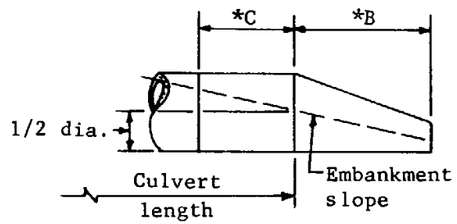

Right Angle Culvert

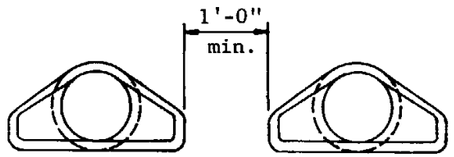

SPACING FOR MULTIPLE INSTALLATION

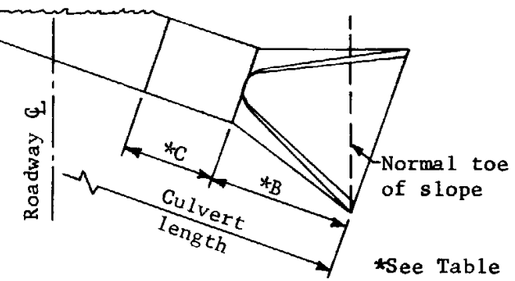

Skewed Culvert

CULVERT LENGTH AS SHOWN ON PLANS

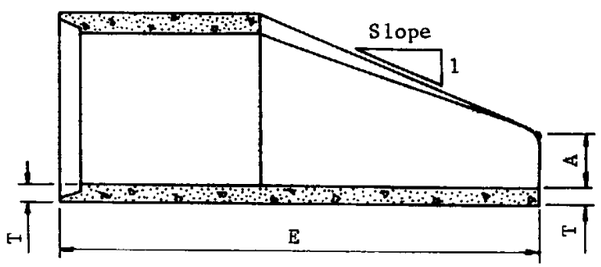

SECTION A-A

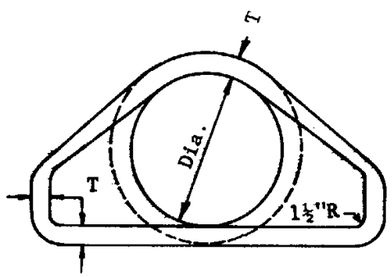

FRONT ELEVATION

ARIZONA HIGHWAY DEPARTMENT
PLANS DIVISION

END SECTION REINFORCED CONCRETE PIPE

Drawn	D.G. - 4-67	Drawing No.
Traced	S.L.T. - 5-67	
Checked	J.P.O. JPO 5-68	C-13.04
Approved Engr. Plans	G Weicheder 5-68	

Rev

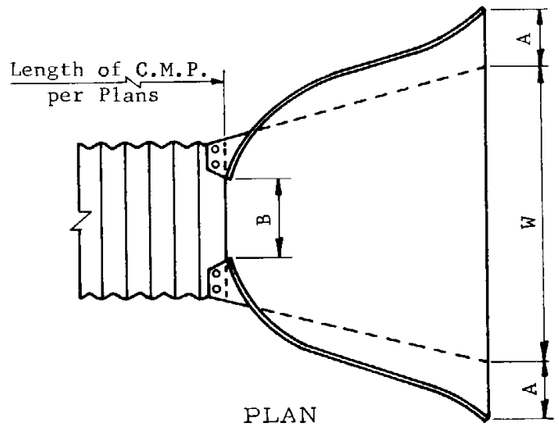

PLAN

PIPE DIA.	GA.	DIMENSIONS - INCHES A ±1	B Max.	H ±1	L ±1½	W ±2	APPROX. SLOPE
24	16	10	13	6	41	48	2 1/2
30	14	12	16	8	51	60	2 1/2
36	14	14	19	9	60	72	2 1/2
42	12	16	22	11	69	84	2 1/2
48	12	18	27	12	78	90	2 1/4
54	12	18	30	12	84	102	2

PIPE ARCH SPAN	RISE	GA.	DIMENSIONS - INCHES A ±1	B Max.	H ±1	L ±1½	W ±2	APPROX. SLOPE
29	18	16	9	14	6	32	48	2 1/2
36	22	14	10	16	6	39	60	2 1/2
43	27	14	12	18	8	46	75	2 1/2
50	31	12	13	21	9	53	85	2 1/2
58	36	12	18	26	12	63	90	2 1/2
65	40	12	18	30	12	70	102	2 1/2
72	44	12	18	33	12	77	114	2 1/4

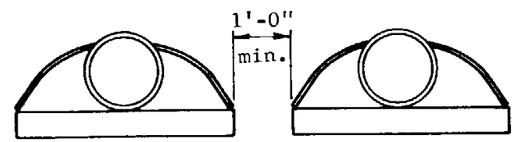

SPACING FOR MULTIPLE INSTALLATION

GENERAL NOTES

The end section shall be joined to the pipe, arch or connector by welding or 3/8" bolts or rivets. The maximum allowable spacing of the bolts or rivets shall be 1'-0" but in no case shall there be less than 12 bolts or rivets per joint.

When a connector is used, the pipe or arch and the connector shall be joined by a standard coupling band.

End sections comprised of two or more pieces may be field assembled using 3/8" bolts or rivets.

End sections may be welded, bolted, or riveted directly to pipe or arch without use of 24" connectors.

All components of the end section shall be galvanized.

Embankment slope shall be warped to match slope of end section.

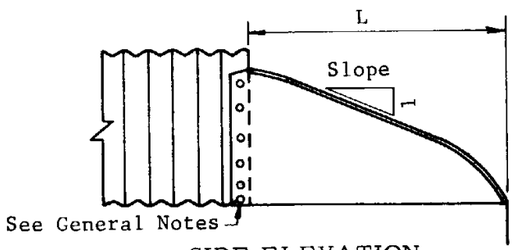

SIDE ELEVATION

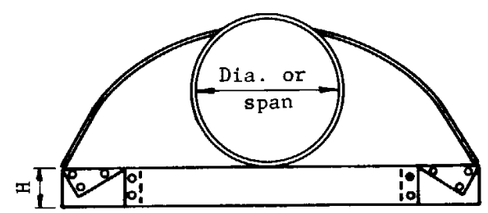

FRONT ELEVATION

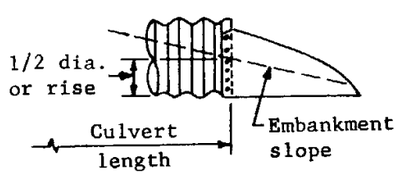

Right Angle Culvert

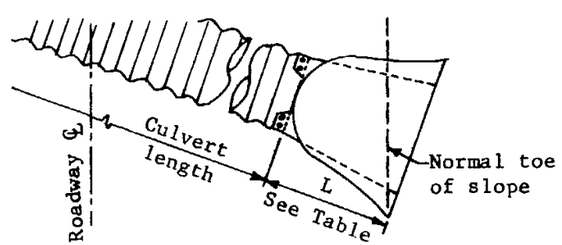

Skewed Culvert

CULVERT LENGTH AS SHOWN ON PLANS

ARIZONA HIGHWAY DEPARTMENT
PLANS DIVISION

END SECTION CORRUGATED METAL PIPE AND PIPE ARCH

Drawn	D.G. 4-67	Drawing No.
Traced	R.A.F. 6-67	
Checked	J.P.O. JPO 5-68	C-13.05
Approved Engr. Plans	G Heidecker 5-68	

Rev

TABLE I

CORRUGATED, CIRCULAR, STEEL PIPE - 2 2/3" X 1/2" ANNULAR OR HELICAL CORRUGATIONS

RIVETED, WELDED OR LOCK SEAM FABRICATION — H-20 LOADING

Dia.	16 Ga.-.064"		14 Ga.-.079"		12 Ga.-.109"		10 Ga.-.138"		8 Ga.-.168"	
	Min.	Max.	Min.	Max.	Min.	Max.	Min.	Max.	Min.	Max.
12	2	76	2	83						
15	2	60	2	66						
18	3	51	2	56	1	71				
24	3	37	2	41	1	48				
30	3	31	2	33	1	37				
36	3	26	2	28	1	32	1	34		
42	2	26	2	28	2	29	2	31	2	32
48	2	26	2	27	2	28	2	29	2	30
54			2	26	2	27	2	28	2	28
60					2	26	2	27	2	28
66					2	26	2	26	2	27
72							2	26	2	26
78									3	26
84									3	26

TABLE II

CORRUGATED, CIRCULAR, STEEL PIPE - 3" X 1" ANNULAR OR HELICAL CORRUGATIONS

RIVETED, WELDED, LOCK SEAM — H-20 LOADING

Dia.	16 Ga.-.064"		14 Ga.-.079"		12 Ga.-.109"		10 Ga.-.138"		8 Ga.-.168"	
	Min.	Max.	Min.	Max.	Min.	Max.	Min.	Max.	Min.	Max.
36	2	29	2	41	1	56	1	65	1	70
42	2	24	2	35	1	44	1	50	1	60
48	3	21	2	30	1	38	1	42	1	49
54	3	19	2	27	1	34	1	37	1	42
60	3	18	2	24	2	31	2	34	1	37
66	3	16	3	22	2	30	2	32	2	34
72	3	15	3	20	2	29	2	30	2	32
78	3	13	3	18	2	28	2	29	2	31
84			3	18	2	27	2	28	2	29
90			3	17	3	26	3	27	3	28
96					3	24	3	25	3	26
102					3	22	3	24	3	25
108					3	21	3	22	3	23
114							3	21	3	22
120							3	20	3	21

TABLE III

STRUCTURAL PLATE PIPE - 6" X 2" CORRUGATIONS

BOLTED FABRICATION (4 - 3/4", A-325 bolts per foot of seam) * — H-20 LOADING

Dia.	12 Ga.		10 Ga.		8 Ga.			7 Ga.			5 Ga.			3 Ga.			1 Ga.		
	Min.	Max. (1)	Min.	Max. (1)	Min.	Max. (1)	Max. (2)	Min.	Max. (1)	Max. (2)	Min.	Max. (1)	Max. (2)	Min.	Max. (1)	Max. (2)	Min.	Max. (1)	Max. (2)
60	1	39	1	57	1	66	75	1	71	86	1	79	158	1	88	176	1	96	198
72	1	32	1	46	1	49	63	1	52	72	1	56	87	1	61	122	1	66	132
84	1	28	1	38	1	40	54	1	42	62	1	45	74	1	48	88	1	51	102
96	2	24	2	34	2	35	47	2	36	54	2	38	65	2	40	77	2	42	83
108	2	21	2	31	2	32	42	2	33	48	2	34	58	2	36	67	2	37	73
120	2	19	2	29	2	30	37	2	31	42	2	32	52	2	33	60	2	34	66
132	3	18	3	26	3	29	33	3	29	39	3	30	46	3	31	55	3	32	60
144	3	16	3	23	3	28	31	3	28	36	3	29	42	3	29	51	3	30	55
156	3	15	3	21	3	27	29	3	27	33	3	28	40	3	28	47	3	29	51
168	3	14	3	19	3	26		3	27	30	3	27	37	3	28	43	3	28	47
180	3	13	3	18	3	24		3	27	29	3	27	34	3	27	41	3	27	44
192			3	18	3	23		3	26		3	27	32	3	27	38	3	27	42
204			4	17	4	22		4	25		4	26	30	4	26	36	4	27	40
216					4	20		4	24		4	26	29	4	26	34	4	26	37
228					4	20		4	22		4	26		4	26	32	4	26	35
240								4	21		4	26		4	26	30	4	26	33
252											4	25		4	26	30	4	26	31

NOTE: (1) indicates circular pipe.
(2) indicates 5% vertically elongated pipe.
When sizes below heavy line are used, design calculations shall be prepared and submitted for checking.

* Bolts shall be torqued to not less than 200 ft. lbs. nor greater than 300 ft. lbs.

GENERAL NOTES

All fill heights are measured, in feet, from finished grade to top of pipe.

Minimum fill heights shall be as noted except no pipe shall extend above the subgrade.

Fill heights over 100' shall be used only after a thorough investigation of the foundation material.

All corrugated metal pipe and appurtenant parts shall be galvanized.

For installation details, see Std. C-13.01.

For fill height design data, see Std. C-13.07.

ARIZONA HIGHWAY DEPARTMENT
PLANS DIVISION

CORRUGATED METAL PIPE DESIGN FILL HEIGHTS

Drawn	D.G.	Drawing No.
Traced	S.L.T. 9-67	C-13.06
Checked	J.P.O. 5-68	
Approved Engr. Plans	5-68	

Rev

Gage	2 2/3" X 1/2" Corrugations A_s	I	r	C_u 1 rivet	C_u 2 rivet	3" X 1" Corrugations A_s	I	r	C_u 2-5/16 rivets	C_u 2-3/8 rivets	C_u 2-7/16 rivets	6" X 2" Corrugations A_s	I	r	C_u 4-bolts ft.	C_u 6-bolts ft.	C_u 8-bolts ft.
16	.0646	.001892	.1726	16750	21500	.0742	.008658	.3452	19200	25800							
14	.0808	.002392	.1726	18200	29800	.0927	.010833	.3452	26500	34300							
12	.1130	.003425	.1726	23400	46800	.130	.015458	.3452		41600	53000	.1297	.060416	.688	42000		
10	.1454	.004533	.1726	24500	49000	.1674	.020175	.3452		43500	61000	.1669	.078166	.688	62000		
8	.17775	.005725	.1726	25600	51300	.2048	.025083	.3452		45600	64000	.2041	.096166	.688	81000		
7												.2283	.1078	.688	93000		
5												.2666	.126916	.688	112000		
3												.3048	.146166	.688	132000		
1												.3432	.165833	.688	144000	184000	220000
3/8"												.4680	.232	.688			270000 ◐

◐ 7/8" bolts. All other 6" X 2" C_u values are for 3/4" bolts.

Criterion 1. DEFLECTION OF PIPE

Formula* 1(a) I(for circular pipe) = $\frac{2.31\ R^3h - 57.3\ R^3}{26{,}800{,}000}$

Formula 1(b) I(for 5% vertically elongated pipe)=Substitute h/2 for h in 1a. Solve 1a for I and determine required gauge and corrugation from table. If 6" X 2" corrugation is indicated, solve for I in 1(b) to determine gauge required for elongated pipe. If I is negative, metal thickness required is less than the minimum tabular value.

Criterion 2. LONGITUDINAL SEAM STRENGTH

Formula 2(a) $C_a = \frac{Dh}{0.0046}$

Solve for C_a and determine gauge and corrugation from table of C_u values.

Criterion 3. BUCKLING OF PIPE WALL

Formula* 3(a) $f_u = 45{,}000 - 1.4547 \left[\frac{0.64\ R}{r}\right]^2$

Use r for the corrugation corresponding to the heaviest gauge determined by formulae 1a, 1b and 2a. Solve for f_u to determine the maximum allowable buckling stress.

Formula 3(b) $A_s = \frac{1.805\ Rh}{f_u}$

Solve for A_s, using f_u value determined in 3a, and select gauge and corrugation from table.

* When Deflection or Buckling is the control, an increase in the maximum h may be realized by backfilling to 95% Proctor density. This revises the applicable formulae to:

Formula 1(a) $I = \frac{2.08\ R^3h - 57.3\ R^3}{26{,}800{,}000}$

Formula 3(a) $f_u = 45{,}000 - 1.4547\left[\frac{0.44\ R}{r}\right]^2$

EXAMPLE

Given: h = 27; D = 15; R = 90

Find: Gauge and corrugation required.

Solution:

Deflection of pipe

Formula 1(a) $I = \frac{(2.31)(729{,}000)(27) - (57.3)(729{,}000)}{26{,}800{,}000} = 0.138$

I values in table indicate a gauge requirement, for circular pipe, of 5 in 6" X 2" corr.

Formula 1(b) $I = \frac{(1.155)(729{,}000)(27) - (57.3)(729{,}000)}{26{,}800{,}000} = -0.711$

The result being negative indicates a gauge requirement lighter than 12 gauge when pipe is elongated 5% vertically.

Longitudinal Seam Strength

Formula 2(a) $C_a = \frac{(15)(27)}{0.0046} = 88{,}000$

Referring to table, 7 gauge, 6" X 2" corr. is required.

Buckling of Pipe Wall

Formula 3(a) $f_u = 45{,}000 - 1.4547 \left[\frac{(0.64)(90)}{.688}\right]^2 = 34820$

Note that since a 6" X 2" corr. is indicated by the preceeding results, the 6" X 2" value for r is used.

The result (allowable buckling stress) is used in the following formula 3(b) to determine gauge requirement.

Formula 3(b) $A_s = \frac{(1.805)(90)(27)}{34820} = 0.126$

The table indicates a gauge requirement of 12 gauge in 6" X 2" corr.

Analysis: Using vertically elongated pipe, the lightest gauge and corr. that will satisfy all requirements is 7 gauge, 6" X 2" corr. Similarly, with circular pipe the lightest gauge is 5. Since cost-wise the two are comparable, 7 ga., 6" X 2" 5% vertically elongated pipe is selected.

Criteria 1, 2 and 3 embody the factors to be investigated in the design of corrugated metal pipe culverts.

Appurtenant formulae are developed from data supplied by the B.P.R. 1966 publication titled "Corrugated Metal Pipe Culverts - Structural Design Criteria and Recommended Installation Practices." These formulae provide safety factors as follows: Criteria 1 = 3.33; Criteria 2 = 3.33 and Criteria 3 = 2.00.

Constants used are:
Embankment weight/cu. ft. = 130 lbs.
Embankment density = 90% Proctor.
Modulus of passive earth resistance = 1000 p.s.i.
Soil stiffness coefficient = 0.32.
Deflection lag factor = 1.39.
Modulus of elasticity = 29,000,000 p.s.i.

Explanation of symbols used:
A_s = Area/lin. inch of pipe in sq. inches.
C_a = Actual ring compression in lb./ft.
C_u = Allowable ring compression in lb./ft.
D = Pipe diameter in ft.
f_a = Actual buckling stress in p.s.i.
f_u = Allowable buckling stress in p.s.i.
h = Fill height; fin. grade to top of pipe in ft.
I = Moment of inertia of pipe wall in inches^4/ inch.
R = Radius of pipe in inches.
r = Radius of gyration of pipe wall in inches.

ARIZONA HIGHWAY DEPARTMENT
PLANS DIVISION

CORRUGATED METAL PIPE FILL HEIGHT DESIGN DATA

Drawn	D.G. 9-67	Drawing No.
Traced	S.L.T. 10-67	C-13.07
Checked	J.P.O. JPO 5-68	
Approved Engr. Plans	E.Heidecker 5-68	

Rev

TABLE 1-A

CORRUGATED, STEEL PIPE ARCH. 2 2/3" X 1/2" CORRUGATIONS. RIVETED, WELDED OR LOCK SEAM FABRICATION. H-20 LOADING

Size - In. Span X Rise	Opening Area Sq. Ft.	Corner Radius In.	Fill Heights - Ft. Maximum Corner Pressure = 4000 Lb./Sq. Ft.									
			16 Ga.-.064"		14 Ga.-.079"		12 Ga.-.109"		10 Ga.-.138"		8 Ga.-.168"	
			Min.	Max.	Min.	Max.	Min.	Max.	Min.	Max.	Min.	Max.
18 X 11	1.1	3.5	1 1/2	12	1 1/2	12	1 1/2	12	1 1/2	12	1 1/2	12
22 X 13	1.6	4.0	1 1/2	11	1 1/2	11	1 1/2	11	1 1/2	11	1 1/2	11
25 X 16	2.2	4.0	2	10	2	10	2	10	2	10	2	10
29 X 18	2.8	4.5	2	10	2	10	2	10	2	10	2	10
36 X 22	4.4	5.0	2	9	2	9	2	9	2	9	2	9
43 X 27	6.4	5.5	2	8	2	8	2	8	2	8	2	8
50 X 31	8.7	6.0	3	7	3	7	3	7	3	7	3	7
58 X 36	11.4	7.0			3	7	3	7	3	7	3	7
65 X 40	14.3	8.0					3	8	3	8	3	8
72 X 44	17.6	9.0							4	8	4	8

GENERAL NOTES

All fill heights are measured from finished grade to top of pipe arch.

Minimum fill heights shall be as noted except no pipe arch shall extend above the subgrade.

To determine fill heights for sizes other than those shown in the tables, use Std. C-13.09 Pipe Arch Design Data.

TABLE 2-A

STRUCTURAL PLATE PIPE ARCH. 6" X 2" Corrugations.
BOLTED FABRICATION, 4-BOLTS/FT. * H-20 LOADING

Size Span & Rise	Opening Area Sq. Ft.	Corner Radius In.	Fill Heights - Ft. Max. Corner Pressure= 4000 Lb./Sq. Ft.							
			12 Ga.		10 Ga.		8 Ga.		7 Ga.	
			Min.	Max.	Min.	Max.	Min.	Max.	Min.	Max.
6'- 1" X 4'-7"	22	18	1	15	1	15	1	15	1	15
7'- 0" X 5'-1"	28	18	1 1/2	13	1 1/2	13	1 1/2	13	1 1/2	13
7'-11" X 5'-7"	35	18	1 1/2	12	1 1/2	12	1 1/2	12	1 1/2	12
8'-10" X 6'-1"	43	18	1 1/2	10	1 1/2	10	1 1/2	10	1 1/2	10
9'- 9" X 6'-7"	52	18	2	9	2	9	2	9	2	9
10'-11" X 7'-1"	61	18	2	8	2	8	2	8	2	8
11'-10" X 7'-7"	71	18			2	7	2	7	2	7
12'- 8" X 8'-1"	81	18			3	6	3	6	3	6

* Bolts shall be torqued to not less than 200 ft. lbs. nor greater than 300 ft. lbs.

ARIZONA HIGHWAY DEPARTMENT
PLANS DIVISION

Rev

CORRUGATED METAL PIPE ARCH DESIGN FILL HEIGHTS

Drawn	D.G. 10-67	Drawing No.
Traced	S.L.T. 10-67	C-13.08
Checked	J.P.O. JPO 5-68	
Approved Engr. Plans	GHeidecker 5-68	

TABLE I											
2 2/3" X 1/2" Corrugations						6" X 2" Corrugations					
				C_u					C_u		
Gage	A_s	I	r	1 rivet	2 rivet	A_s	I	r	4-bolts ft.	6-bolts ft.	8-bolts ft.
16	.0646	.001892	.1726	16750	21500						
14	.0808	.002392	.1726	18200	29800						
12	.1130	.003425	.1726	23400	46800	.1297	.060416	.688	42000		
10	.1454	.004533	.1726	24500	49000	.1669	.078166	.688	62000		
8	.17775	.005725	.1726	25600	51300	.2041	.096166	.688	81000		
7						.2283	.1078	.688	93000		
5						.2666	.126916	.688	112000		
3						.3048	.146166	.688	132000		
1						.3432	.165833	.688	144000	184000	220000

TABLE II			
h or h'	L_L	L_D	L_L+L_D
1'	1800	130	1930
2'	800	260	1060
3'	600	390	990
4'	400	520	920
5'	250	650	900
6'	200	780	980
7'	175	910	1085
8'	100	1040	1140

For h=9' and over, L_L is eliminated so total load then becomes h X 130.

Criteria 1, 2, 3 and 4 embody the factors to be investigated in the design of corrugated metal pipe arch culverts.

Appurtenant formulae are condensed from data supplied by the 1967 edition of American Iron and Steel Institute's publication titled "Handbook of Steel Drainage and Highway Construction Products" and the B. P. R. 1966 publication titled "Corrugated Metal Pipe Culverts - Structural Design Criteria and Recommended Installation Practices." These formulae provide safety factors of 1, 3.33, 2 and 3.33 respectively for Criteria 1, 2, 3 and 4.

Constants used are the same as for Std. C-13.07, "Corrugated Metal Pipe Fill Height Design Data."

Explanation of variable symbols used:

A_s = Area per lin. inch of pipe arch in sq. in.
C_a = Actual ring compression in lbs./ft.
C_u = Allowable ring compression in lbs./ft.
f_u = Allowable buckling stress in p.s.i.
h = Max. fill height; fin. grade to top of pipe arch.
h' = Min. fill height; fin. grade to top of pipe arch.
I = Moment of inertia of pipe arch wall in $inches^4$/ inch
R = 3H+3S in inches
r = Radius of gyration of pipe wall in inches.
Δ_u = Allowable deflection in inches.
Δ_a = Actual deflection in inches
S = Span in ft.
H = Rise in ft.
R_c = Corner radius in inches
P = Corner pressure in lbs./sq.ft.

Criterion I CORNER PRESSURE

Formula 1 (a) $P = \frac{6S(L_L + L_D)}{R_c}$

Using h, take $(L_L + L_D)$ from Table II and solve for P.
Note: If P>4000, consideration shall be given toward possible special back fill design.

Formula 1 (b) $(L_L + L_D) = \frac{667R_c}{S}$

Solve for $L_L + L_D$. Use Table II to determine h'.

Criterion 2 LONGITUDINAL SEAM STRENGTH.

Formula 2 $C_a = 1.67S\ (L_L + L_D)$

Using h, take $(L_L + L_D)$ from Table II and solve for C_a.
Determine gauge and corr. by comparing C_a with C_u values in Table I.

Criterion 3 BUCKLING OF PIPE ARCH WALL

Formula 3 (a) $f_u = 22500 - 0.72735\ (3.84S/r)^2$

Formula 3 (b) $f_u = \frac{S(L_L + L_D)}{24A_s}$

Use r for corrugation indicated by Formula 2
Equate f_u from 3(a) in 3(b) and solve for A_s
Determine gauge and corrugation from Table I.

Criterion 4 DEFLECTION

Formula 4(a) $\Delta_u = 0.6H$

Formula 4(b) $\Delta_a = \frac{1.507hSR^3}{29{,}000{,}000\ I + 61R^3}$

Use value I of heaviest gauge and corrugation required by Criteria 2 and 3. If $\angle_u > \angle_a$, deflection is satisfactory.

EXAMPLE:

Given: 72" X 44" Pipe Arch, h = 15, R_c = 9.

Find: Guage, corrugation, h'

Formula 1(a) $P = \frac{6 \times 6 \times 1950}{9}$

$= 7800$

Since P> 4000 investigation of special backfill and/or corner support design is mandatory.

Formula 1(b) $(L_L + L_D) = \frac{667 \times 9}{6}$

$= 1000$

From Table II, h' = 3

Formula 2 $C_a = 1.67 \times 6 \times 1950$
$= 19550$

Referring to Table I, 12 ga., 1-rivet, 2 2/3" X 1/2" is satisfactory with respect to seam strength

Formula 3(a) $f_u = 22500 - 0.72735 \times (3.84 \times 6/.1726)^2$
$= 9620$

Formula 3(b) $9620 = \frac{6 \times 1950}{24A_s}$

$A_s = 0.0507$

Referring to Table I, value of A_s indicates a lighter gauge than that called for in Formula 2 so 12 ga., 1-rivet, 2 2/3" X 1/2" is safe from buckling.

Formula 4 (a) $\Delta_u = 0.6 \times 3.67$
$= 2.202$

$\Delta_a = \frac{1.507 \times 15 \times 6 \times (3 \times 6 + 3 \times 3.67)^3}{29{,}000{,}000 \times 0.003425 + 61 \times (3 \times 6 + 3 \times 3.67)^3}$
$= 2.08$

$\Delta_u > \Delta_a$ so deflection is satisfactory.

ARIZONA HIGHWAY DEPARTMENT PLANS DIVISION			Rev
CORR. METAL PIPE ARCH FILL HEIGHT DESIGN DATA			
Drawn	D.G. 10-67	Drawing No.	
Traced	R.A.F. 11-67		
Checked	J.P.O. JPO 5-68	C-13.09	
Approved Engr. Plans	G Weichel 5-68		

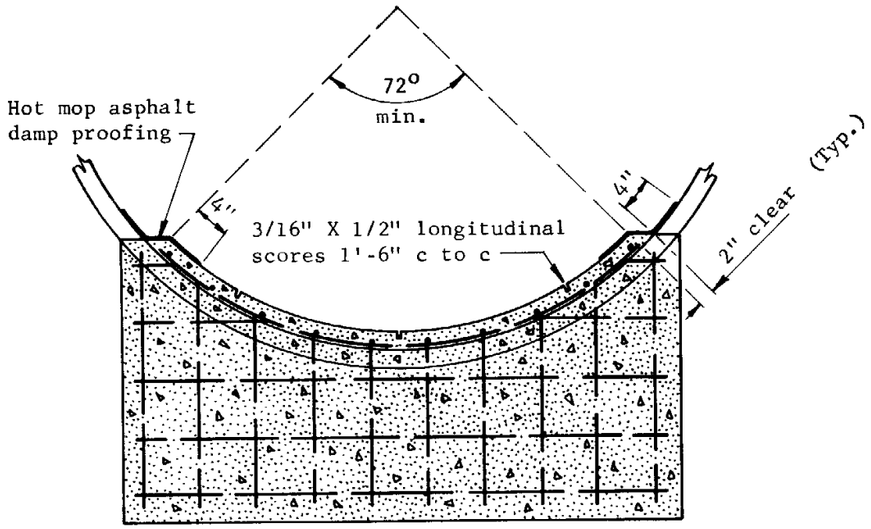

FULL CIRCULAR PIPE,
C. M. P. OR STRUCTURAL PLATE PIPE

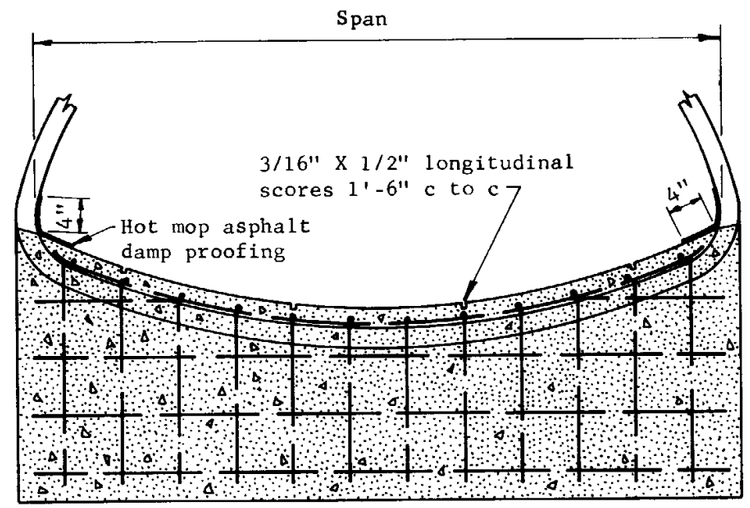

PIPE ARCH OR
STRUCTURAL PLATE ARCH

END ELEVATIONS

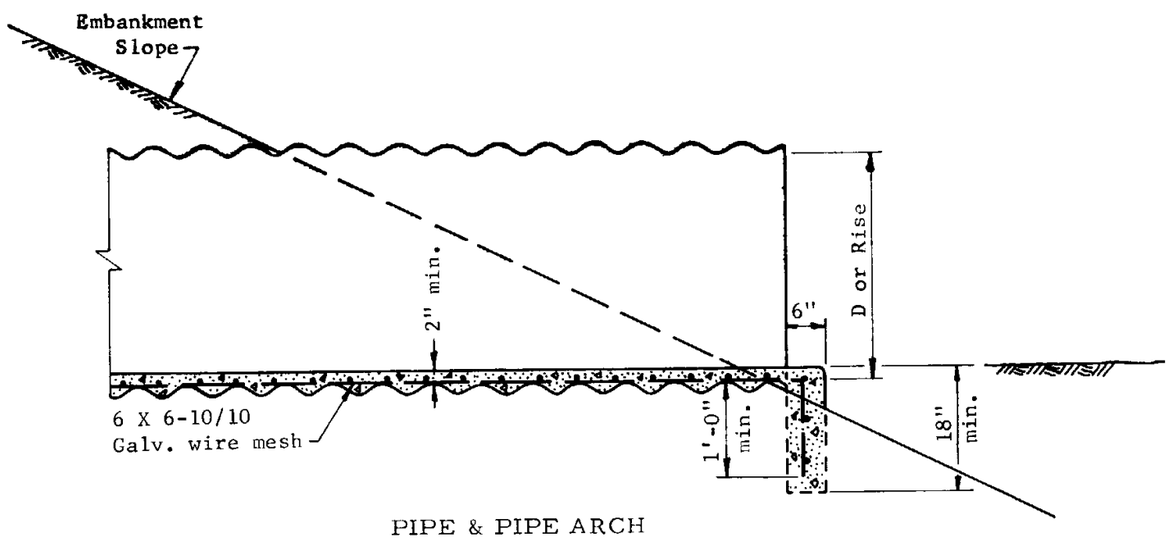

PIPE & PIPE ARCH
LONGITUDINAL SECTION

GENERAL NOTES

The wire mesh shall be fastened or welded in an approved manner to the corrugation crests.

All laps shall be 6" minimum.

Invert paving shall not be placed until fill over pipe is completed.

All concrete shall be Class A .

ARIZONA HIGHWAY DEPARTMENT PLANS DIVISION			Rev
CORRUGATED METAL PIPE CONCRETE INVERT PAVEMENT			
Drawn	D.G.	Drawing No.	
Traced	R.A.F. 5-17-67		
Checked	J.P.O. JPO 5-68	C-13.10	
Approved Engr. Plans	H Heidecker 5-68		

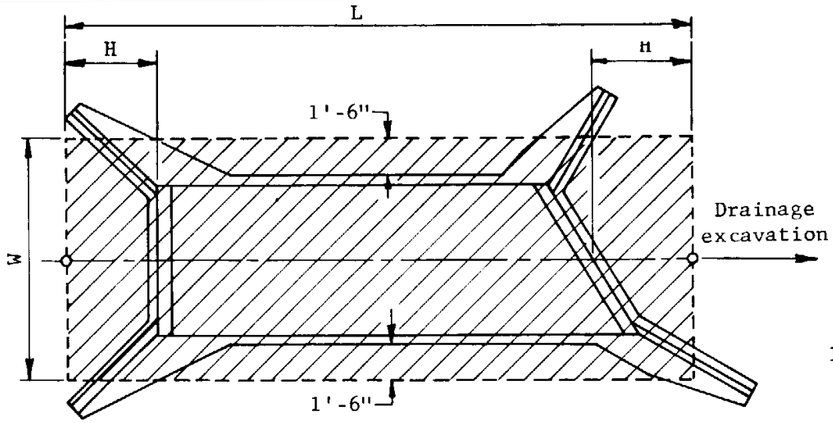

Plan View Showing Structural Excavation Length, L, and Width, W, for Payment Limits

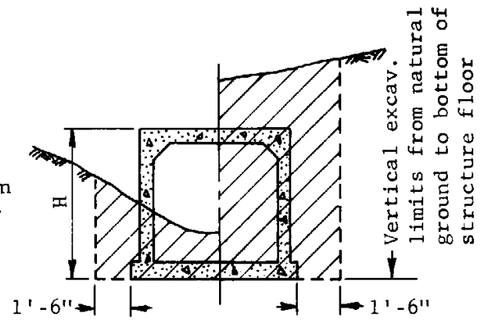

Section Showing Structural Excavation Payment Limits

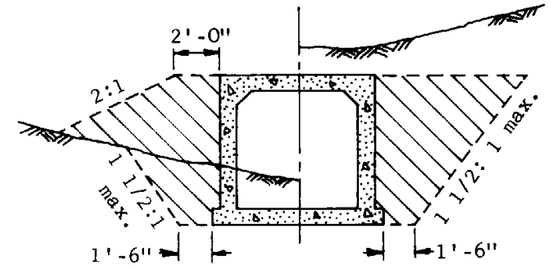

Section Showing Special Backfill

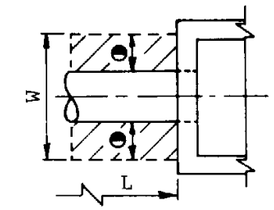

Plan Showing Catch Basin, Manhole or Similar Structure

CONCRETE BOX CULVERTS

H = Height of barrel or headwall excluding cutoff wall.
⊖ = 1'-6" max.

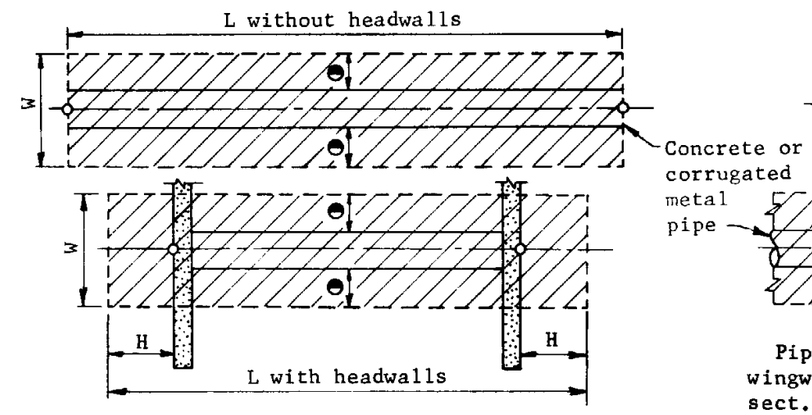

Pipe line in trench and pipe culvert with or without one or more headwalls.

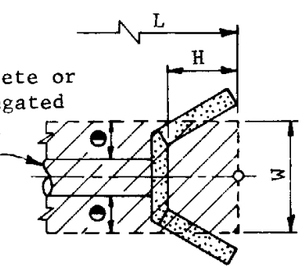

Pipe with normal wingwall, flared end sect. or U headwall

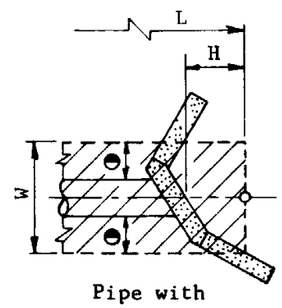

Pipe with skewed wingwall

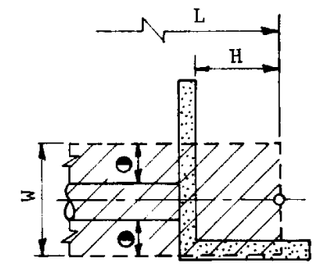

Pipe with L headwall

Plan View Showing Length, L, and Width, W, for Payment Limits

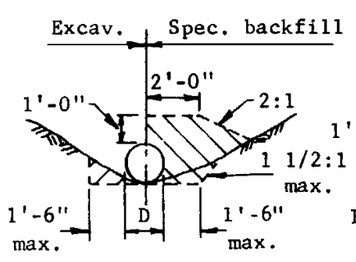

Metal or Concrete Pipe in Embankment

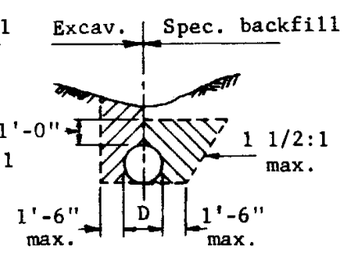

Metal Pipe in Trench

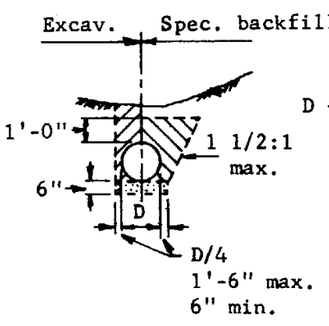

Concrete Pipe in Trench

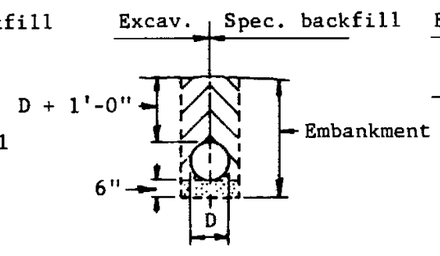

Concrete Pipe in Imperfect Trench

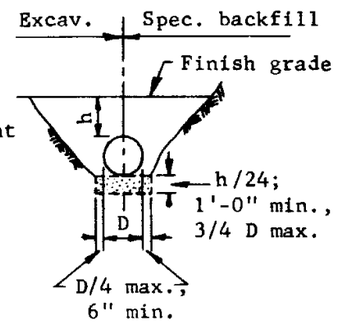

Concrete Pipe in Rock

Sections Showing Structural Excavation Width Limits and Special Backfill Placement

PIPE LINES AND PIPE CULVERTS

GENERAL NOTES

Payment limits shown include structural excavation for headwalls, cutoff walls, wingwalls, end sections etc.

Placement of special backfill around headwalls and wingwalls shall be the same as that for structures.

Payment limits shown shall be applied to multiple installations by discounting the overlap in width limits.

D indicates the O.D. and maximum outside width of circular and arch type structures respectively.

ARIZONA HIGHWAY DEPARTMENT PLANS DIVISION			Rev
STRUCTURAL EXCAVATION PAYMENT LIMITS AND SPECIAL BACKFILL PLACEMENT			
Drawn	D.G. 12-66	Drawing No.	
Traced	R.A.F. 2-68	C-13.11	
Checked	J.P.O. JPO 5-68		
Approved Engr. Plans	G Heidecker 5-68		

DIMENSIONS									
I.D.	A	B	C	D	E	L	L+E	F	G
18"	6"	6"	1'-8"	4'-2"	2'-8"	9'-6"	12'-2"	1'-7"	4'-6"
24"	8"	8"	2'-0"	4'-8"	3'-6"	11'-6"	15'-0"	2'-1"	5'-6"
30"	8"	8"	2'-0"	5'-2"	4'-4"	13'-6"	17'-10"	2'-7"	6'-6"
36"	1'-0"	8"	2'-4"	5'-8"	5'-2"	15'-6"	20'-8"	3'-1"	7'-6"
42"	1'-1"	10"	2'-7"	6'-2"	6'-0"	17'-6"	23'-6"	3'-7"	8'-6"
48"	1'-2"	1'-0"	2'-10"	6'-8"	6'-10"	19'-6"	26'-4"	4'-1"	9'-6"

"U" HEADWALL									
I.D.	Conc. C.Y.		Reinf. Steel #4 Bars						
	For C.M.P.	For Conc. Pipe	a		b		b_1		lbs.
			No.	Lgth	No.	Lgth	No.	Lgth	
18"	1.68	1.65	12	4'-8"	6	4'-3"	10	5'-8"	90
24"	2.37	2.33	14	5'-4"	6	5'-3"	12	6'-8"	121
30"	3.01	2.96	18	5'-10"	6	6'-3"	12	7'-8"	152
36"	3.90	3.83	20	6'-8"	6	7'-3"	14	8'-8"	194
42"	4.72	4.63	24	7'-1"	6	8'-3"	14	9'-8"	263
48"	5.91	4.79	28	7'-8"	6	9'-3"	16	10'-8"	289

"L" HEADWALL									
I.D.	Conc. C.Y.		Reinf. Steel #4 Bars						
	For C.M.P.	For Conc. Pipe	a		b		b_1		lbs.
			No.	Lgth.	No.	Lgth.	No.	Lgth.	
18"	1.42	1.39	10	4'-8"	6	6'-9"	5	5'-8"	73
24"	2.00	1.96	12	5'-4"	6	8'-3"	6	6'-8"	97
30"	2.53	2.48	14	5'-10"	6	9'-9"	6	7'-8"	118
36"	3.27	3.20	16	6'-8"	6	11'-3"	7	8'-8"	149
42	4.04	3.95	18	7'-2"	6	12'-9"	7	9'-8"	194
48"	4.94	4.82	20	7'-8"	6	14'-3"	8	10'-8"	215

SINGLE PIPE HEADWALL							
I.D.	Conc. C.Y.		Reinf. Steel #4 Bars				
	For C.M.P.	For Conc. Pipe	a		b		lbs.
			No.	Lgth.	No.	Lgth.	
18"	1.17	1.14	8	4'-8½"	5	9'-3"	56
24"	1.64	1.60	10	5'-4½"	5	11'-3"	74
30"	2.05	2.00	10	5'-10½"	5	13'-3"	83
36"	2.63	2.56	12	6'-8½"	5	15'-3"	105
42"	3.24	3.15	14	7'-2½"	5	17'-3"	125
48"	3.96	3.84	16	7'-8½"	5	19'-3"	147

DOUBLE PIPE HEADWALL							
I.D.	C.Y. Conc.		Reinf. Steel #4 Bars				
	For C.M.P.	For Conc. Pipe	a		b		lbs.
			No.	Lgth.	No.	Lgth.	
18"	1.47	1.42	9	4'-8"	5	11'-11"	68
24'	2.07	2.00	11	5'-4"	5	14'-9"	88
30"	2.62	2.52	12	5'-10"	5	17'-7"	105
36"	3.40	3.27	14	6'-8"	5	20'-5"	131
42"	4.19	4.01	16	7'-2"	5	23'-3"	154
48"	5.15	4.92	17	7'-8"	5	26'-1"	175

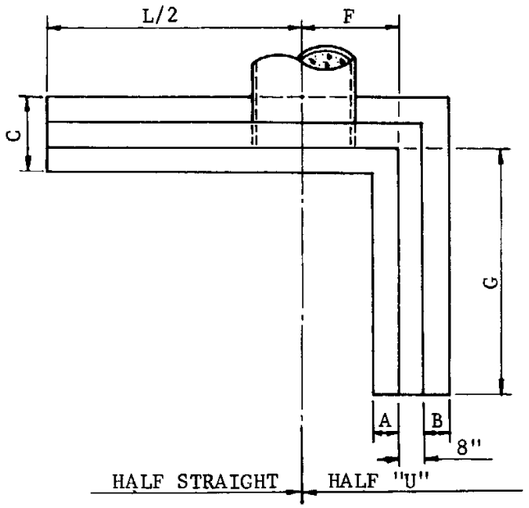

"L" HEADWALL

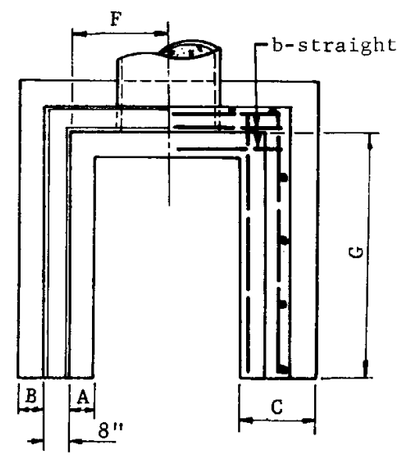

PLAN

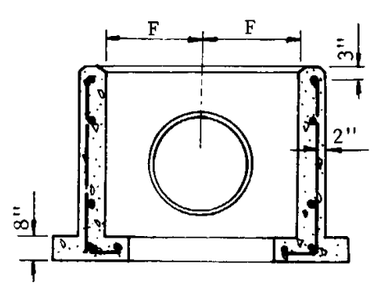

SECTION

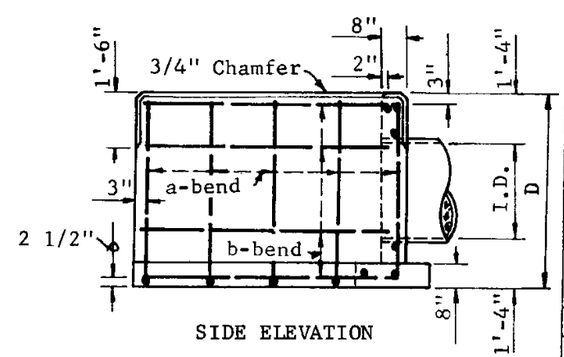

SIDE ELEVATION

"U" HEADWALL

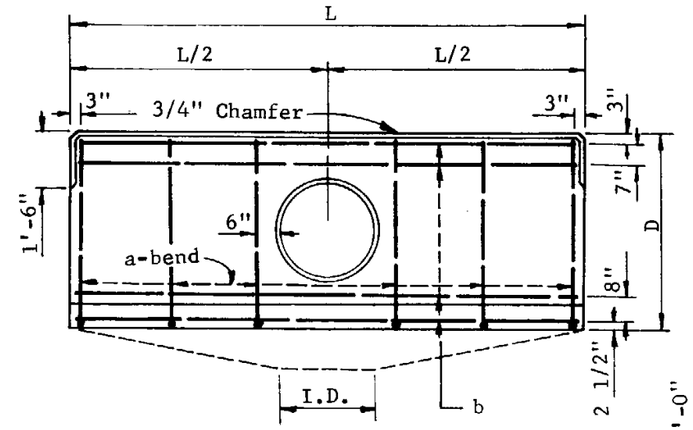

SINGLE PIPE

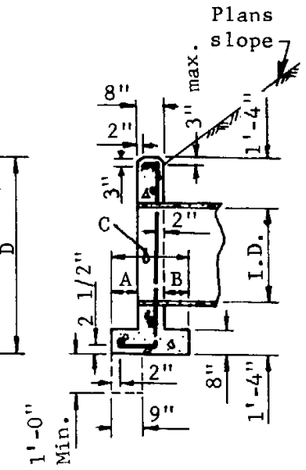

SECTION

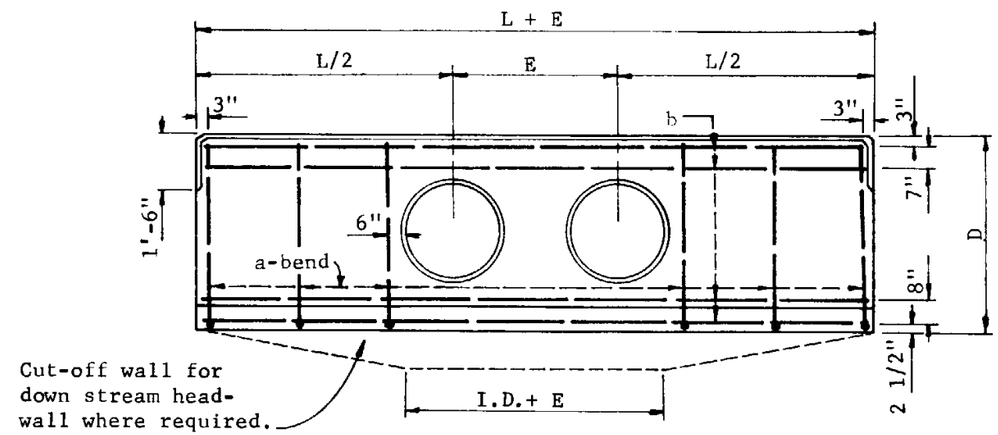

DOUBLE PIPE
STRAIGHT HEADWALLS

GENERAL NOTES
All concrete shall be Class A.
High point of headwall shall not project more than 3" above slope.

ARIZONA HIGHWAY DEPARTMENT
PLANS DIVISION

PIPE HEADWALL STRAIGHT, "L" & "U" TYPE

Drawn	L.O.M. 3-23-65	Drawing No.
Traced	S.L.T. 5-5-67	C-14.01
Checked	J.P.O. JPO 5-68	
Approved Engr. Plans	G Weidecker 5-68	

Rev

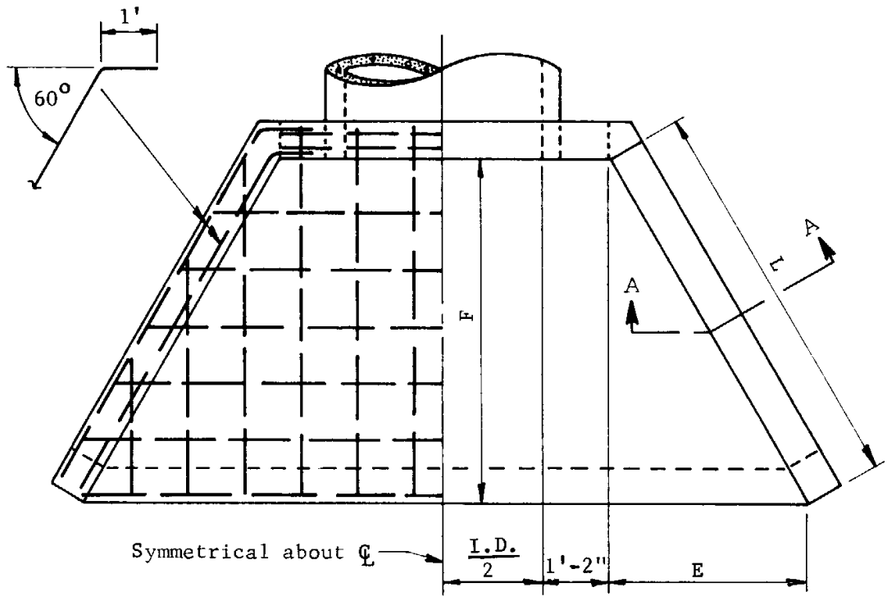

PLAN

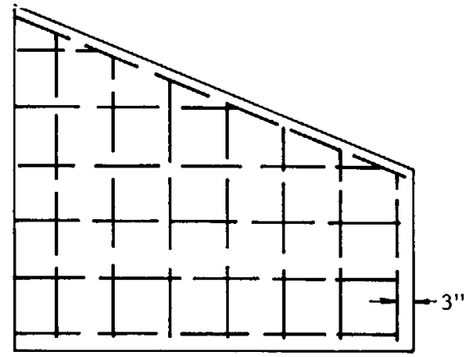

WING WALL REINFORCING

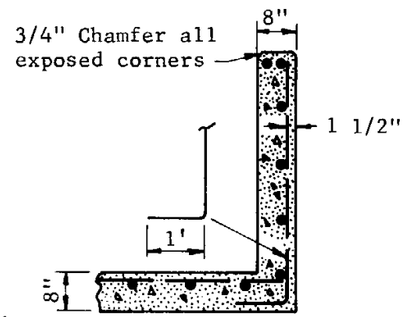

SECTION A-A

PIPE	DIMENSIONS				QUANTITIES		
					C.Y. CONC.		
I.D.	L	E	F	X	C.M.P.	Deduct for R.C.P.	Reinf.Steel Lbs.
42"	7'-0"	3'-6"	6'-1"	2'-6"	4.38	0.09	205
48"	7'-6"	3'-9"	6'-6"	3'-0"	5.15	0.12	265
54"	8'-0"	4'-0"	6'-11"	3'-0"	5.21	0.14	295
60"	9'-0"	4'-6"	7'-10"	3'-0"	7.09	0.18	340
66"	10'-0"	5'-0"	8'-8"	3'-3"	7.54	0.21	390
72"	11'-0"	5'-6"	9'-6"	3'-3"	8.59	0.25	480
78"	11'-6"	5'-9"	10'-0"	3'-6"	9.47	0.30	490
84"	12'-0"	6'-0"	10'-5"	3'-9"	10.35	0.34	560

GENERAL NOTES

All concrete shall be Class A.

All reinforcing bars shall be #4 except two #6 bars over pipe. Bar spacing shall be 1'-0" centers.

Plan shown is drawn for a 42" pipe.

High point of headwall shall not project more than 3" above slope.

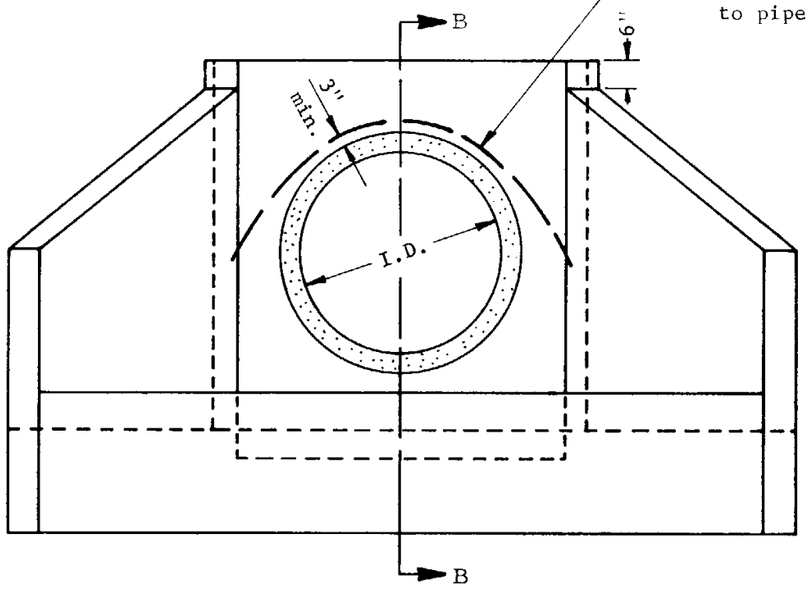

ELEVATION

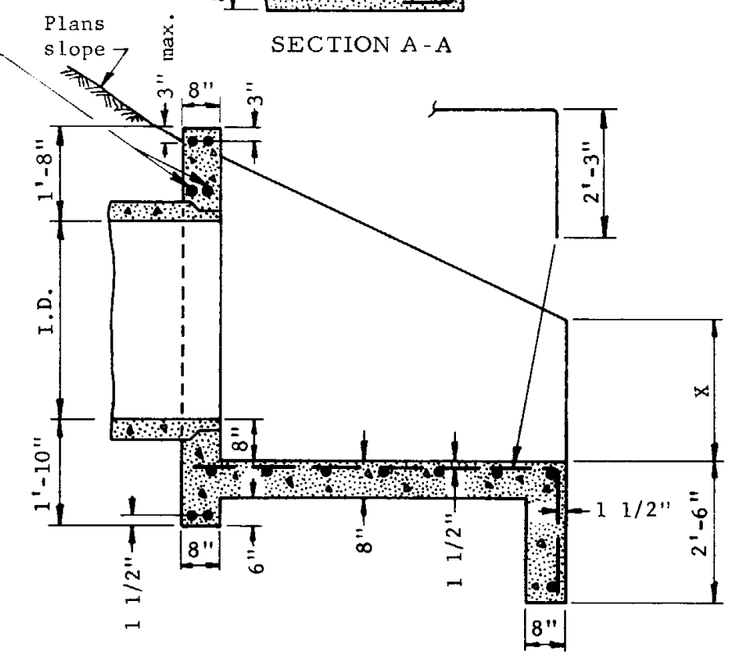

SECTION B-B

ARIZONA HIGHWAY DEPARTMENT
PLANS DIVISION

PIPE HEADWALLS 42" TO 84" DIAMETER PIPES

Drawn	W.M.D. 2-36	Drawing No.
Traced	R.A.F. 5-11-67	C-14.02
Checked	J.P.O. JPO 5-68	
Approved Engr. Plans	G Weidacher 5-68	

Rev.

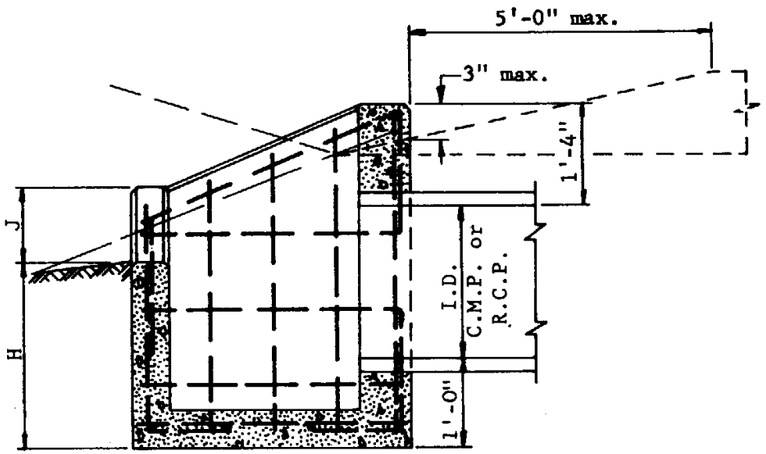

SECTION Z-Z

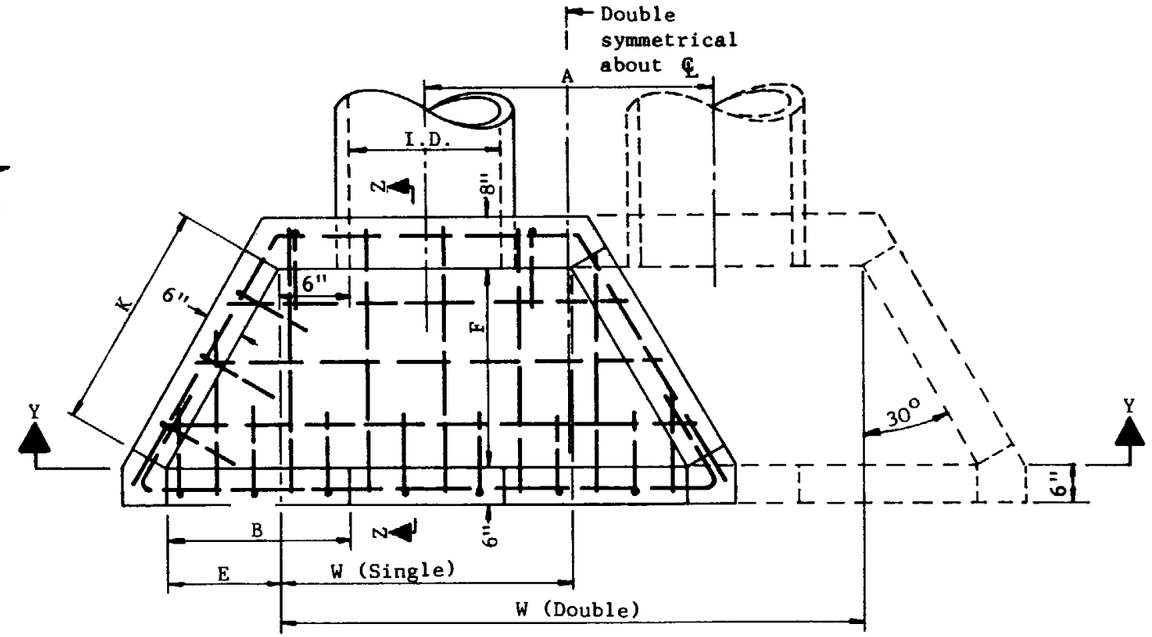

PLAN

All reinforcing shall be
#4 bars 1'-0" c to c

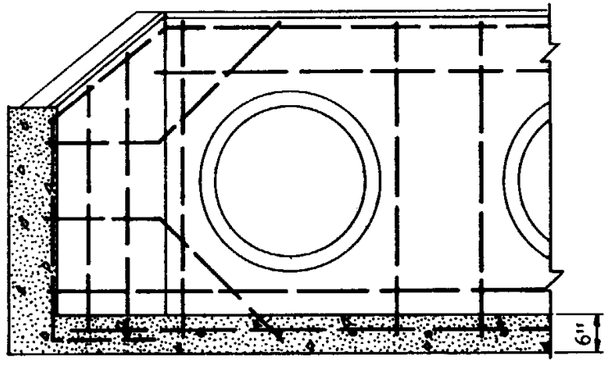

SECTION Y-Y

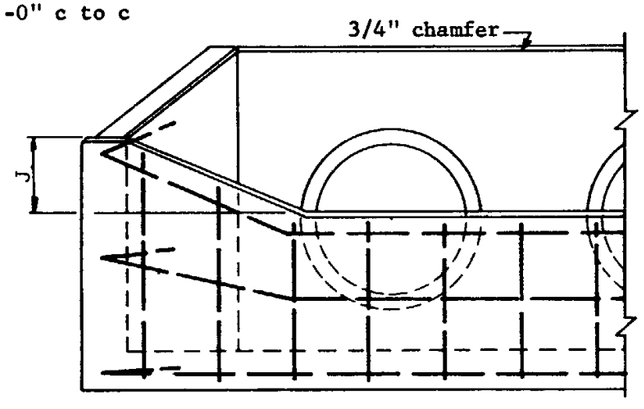

ELEVATION

GENERAL NOTES
Reference Std. C-13.01.
High point of headwall shall not project more than 3" above slope.
All concrete shall be Class A.

PIPE	DIMENSIONS									QUANTITIES					
										CONC. C.Y.				REINF. STEEL	
	W									Single		Double		LBS.	
I.D.	Single	Double	A	B	E	F	H	J	K	C.M.P.	For Conc. Pipe Deduct	C.M.P.	For Conc. Pipe Deduct	Single	Double
18"	2'-6"	5'-2"	2'-8"	1'-3"	9"	1'-3 5/8"	3'-1"	9"	1'-6"	0.76	0.03	1.12	0.06	75	107
24"	3'-0"	6'-6"	3'-6"	1'-7 1/2"	1'-1 1/2"	1'-11 3/8"	3'-5"	11"	2'-3"	1.00	0.04	1.55	0.09	92	136
30"	3'-6"	7'-10"	4'-4"	2'-0"	1'-6"	2'-7 1/4"	3'-9"	1'-1"	3'-0"	1.50	0.06	2.29	0.13	112	166
36"	4'-0"	9'-2"	5'-2"	2'-4 1/2"	1'-10 1/2"	3'-3"	4'-0"	1'-4"	3'-9"	1.96	0.09	3.01	0.17	145	214
42"	4'-6"	10'-6"	6'-0"	2'-9"	2'-3"	3'-10 3/4"	4'-4"	1'-6"	4'-6"	2.49	0.11	3.85	0.23	189	279

ARIZONA HIGHWAY DEPARTMENT
PLANS DIVISION

Rev

DROP INLET HEADWALLS

Drawn	K.S. 10-39	Drawing No.
Traced	S.L.T. 8-67	C-14.03
Checked	J.P.O. JPO 5-68	
Approved Engr. Plans	G Heidecker 5-68	

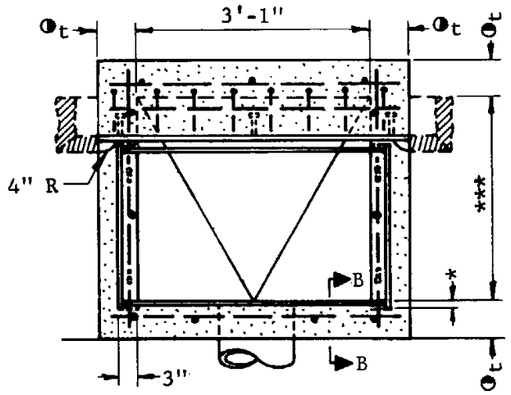

PLAN-CATCH BASIN NO. 1 - SINGLE

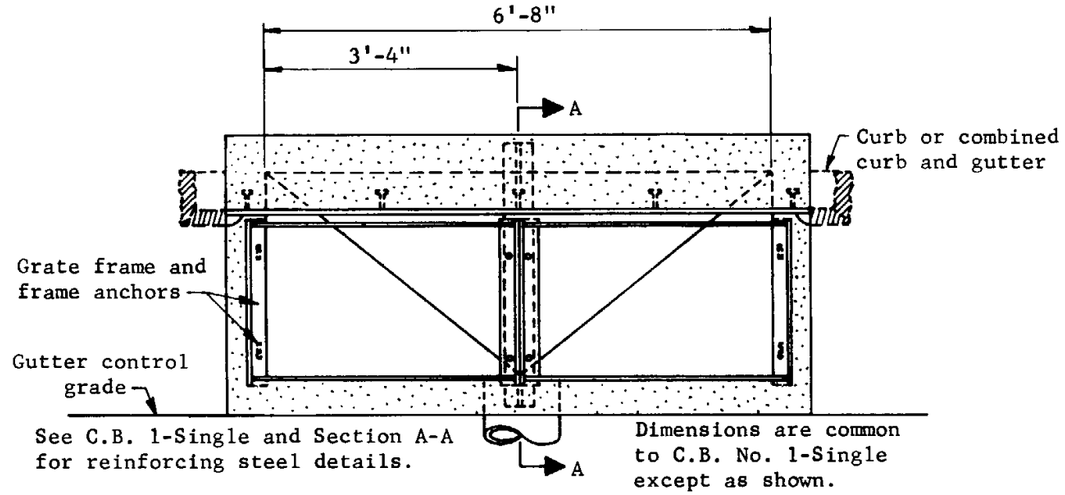

PLAN - CATCH BASIN NO. 1 -DOUBLE

GENERAL NOTES

Pipes can be placed in any wall.

Sump floor shall have a wood trowel finish and a minimum slope of 4:1 in all directions toward outlet pipe.

Welding shall be in accordance with A.H.D. Welding Manual.

For grates LW-1, TW-2, etc., and frame details and opening areas, see Stds. C-15.06 and C-15.07.

Any specified gutter depression shall be warped to opening according to Std. C-15.08.

All structural steel shall be ASTM A 36.

Grate support and nose angle shall be given one shop coat of No. 1 paint.

All concrete shall be Class A.

Curb opening areas (Sq.Ft.) for Catch Basin No. 1-Single and Catch Basin No. 1-Double equal 0.26 and 0.55, respectively, for each inch of curb "h" + gutter depression - 2.1"

* 3/4" for longitudinal and 3" for transverse grates.

** 2'-0" for LW-1, LB-1, TW-1 and TB-1 grates. 1'-6" for LW-2, LB-2, TW-2 and TB-2 grates. Use 1'-6" dimension when catch basin is used with combined curb and gutter.

*** 2'-8 1/2" for LW-1, LB-1, TW-1 and TB-1 grates. 2'-2 1/2" for LW-2, LB-2, TW-2 and TB-2 grates.

◐ t = 6" when H is 8' or less; 8" when H is over 8'. (See Section B-B)

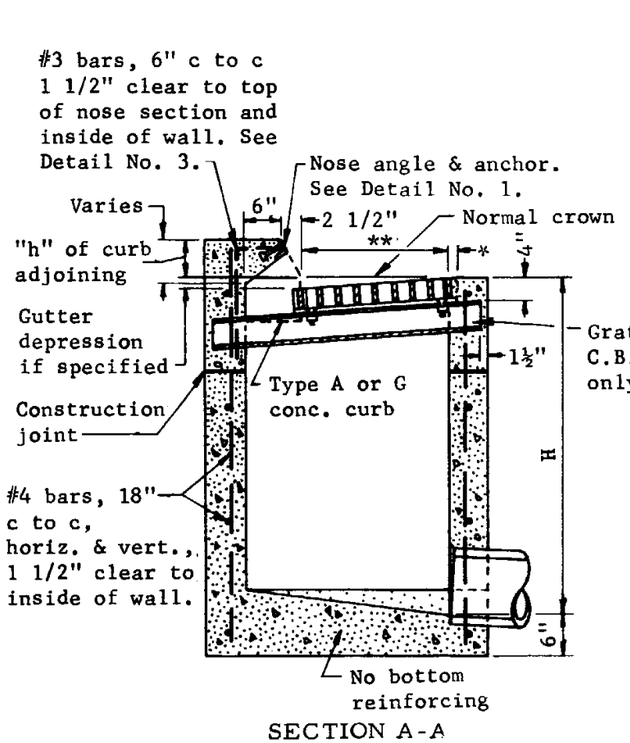

SECTION A-A

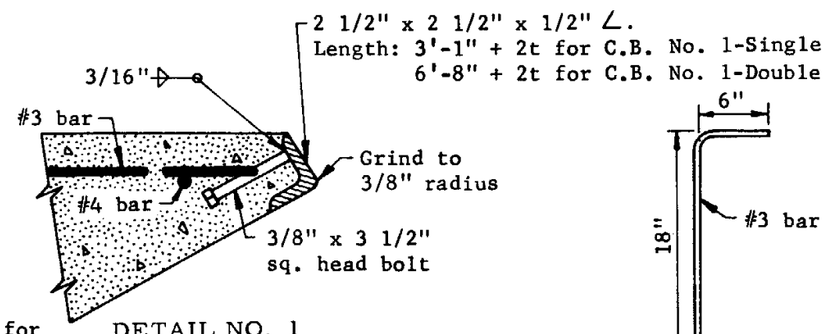

DETAIL NO. 1

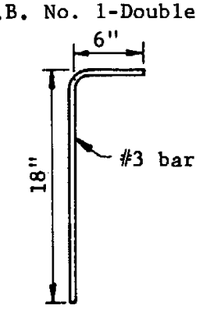

DETAIL NO. 3

NOTE: Provide Std. C-15.08 Construction Drain.

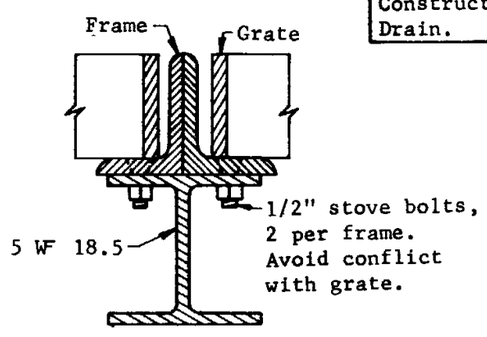

DETAIL NO. 2

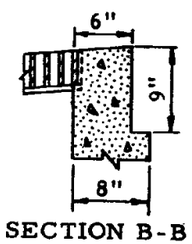

SECTION B-B

Use this section when t = 8"

ARIZONA HIGHWAY DEPARTMENT PLANS DIVISION			Rev
TYPE 1 CATCH BASIN			
Drawn	D.G. 7-67	Drawing No.	
Traced	R.A.F. 7-67		
Checked	J.P.O. JPO 5-68	C-15.01	
Approved Engr. Plans	G Weidecker 5-68		

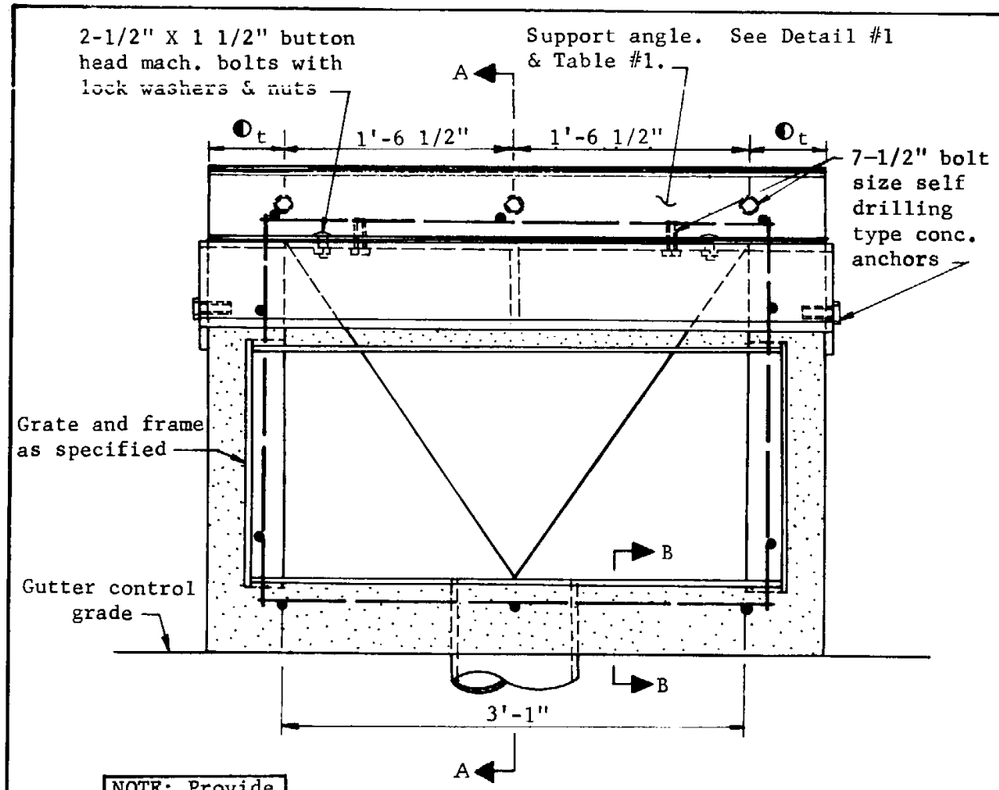

NOTE: Provide Std. C-15.08 Construction Drain.

PLAN

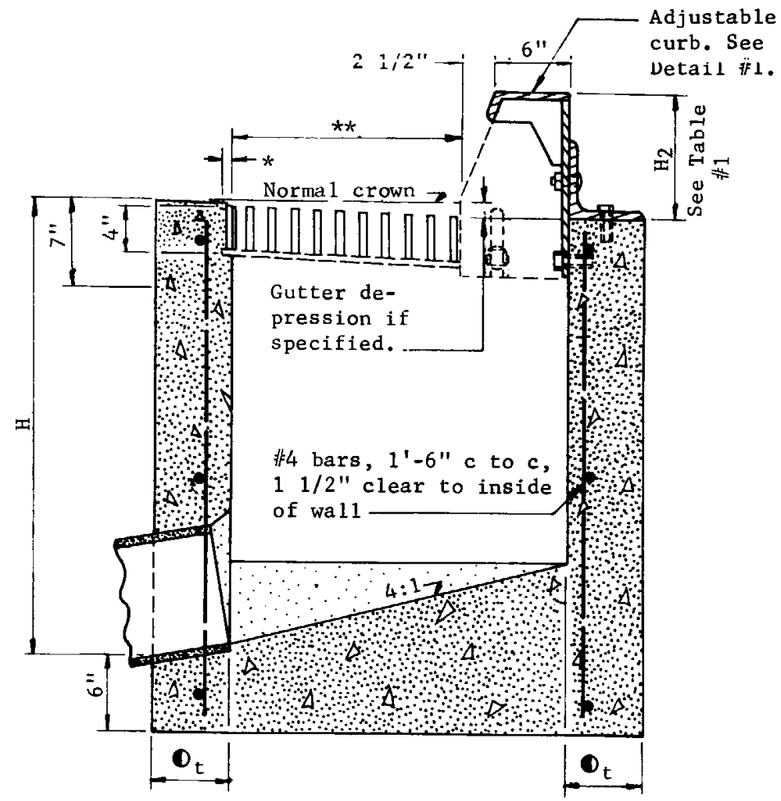

SECTION A-A

GENERAL NOTES

Pipes can be placed in any wall.

1/2" chamfer top edges of sump walls.

Basin sump floors shall have wood trowel finish and a minimum slope of 4:1 from all directions toward outlet pipe.

Welding shall be in accordance with A.H.D. Welding Manual.

For grates LW-1, TW-2, etc. and frame details and opening areas, see Stds. C-15.06 and C-15.07.

Gutter depression = 3" max. modified to 1 1/2" max. for shoulder locations and no depression for adjoining medians.

Any specified gutter and apron depression shall be warped to opening according to Standard C-15.08.

All concrete shall be Class A.

All Structural steel shall be ASTM A 36.

Adjustable Curb shall be galvanized according to ASTM A 123.

* 3/4" for LW or LB grates.
3" for TW or TB grates.

** 2'-0" for LW-1, LB-1, TW-1 or TB-1 grates. 1'-6" for LW-2, LB-2, TW-2 or TB-2 grates. Use 1'-6" dimension when catch basin is used with combined curb and gutter.

◐ t = 6" when H is 8' or less; 8" when H is over 8'. (See Sect. B-B)

TABLE #1

H_2	Support Angle size
4 1/16" to 8 3/16"	4"X4"X3/8"
8 1/4" to 9 3/16"	5"X5"X3/8"
9 1/4" to 10 1/16"	6"X6"X3/8"

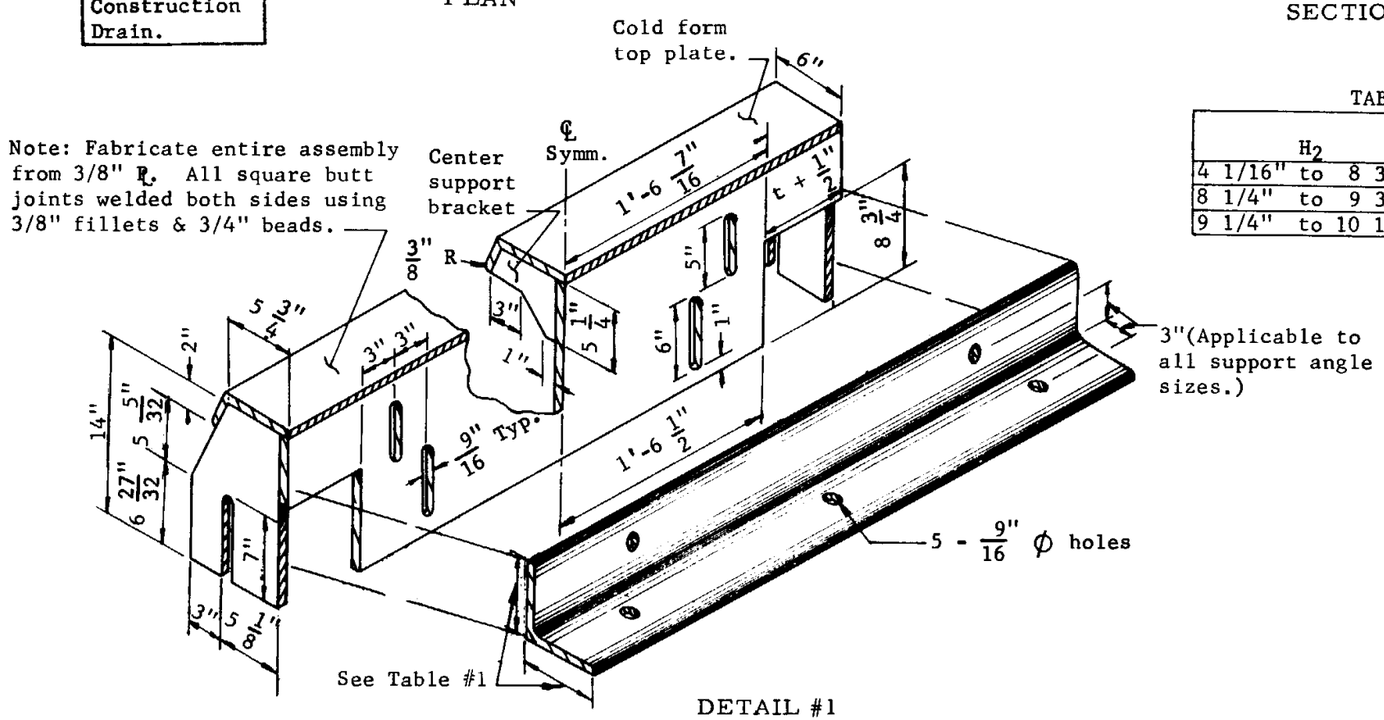

DETAIL #1
ADJUSTABLE CURB ASSEMBLY

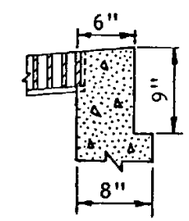

SECTION B-B

ARIZONA HIGHWAY DEPARTMENT
PLANS DIVISION

Rev

TYPE 2 CATCH BASIN

Drawn	D.G.	11-66	Drawing No.
Traced	S.L.T.	6-67	
Checked	J.P.O.	JPO 5-68	C-15.02
Approved Engr. Plans	[signature]	5-68	

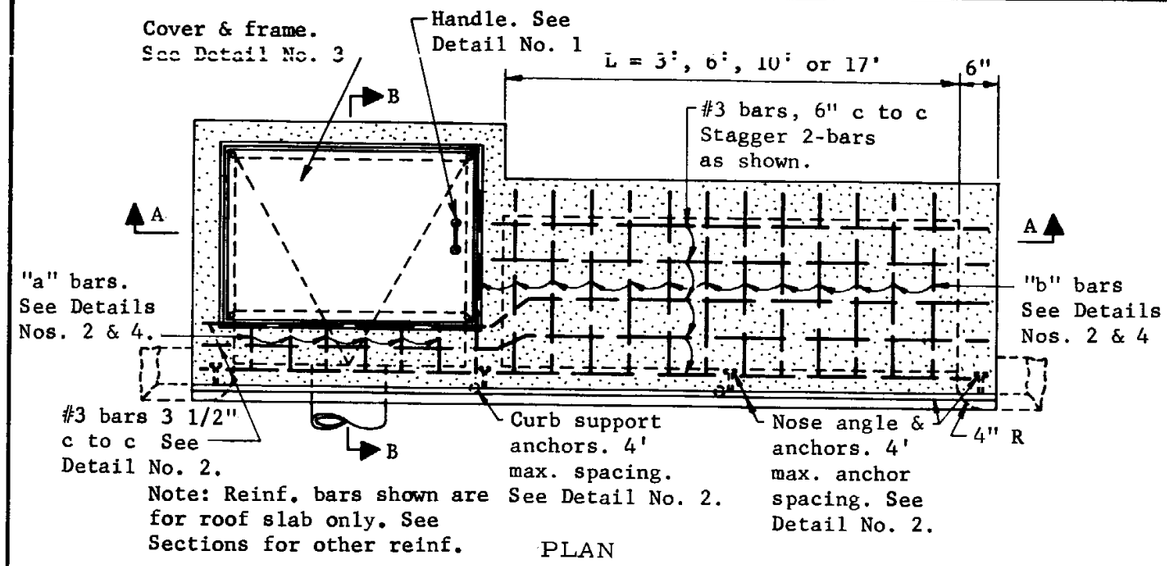

PLAN

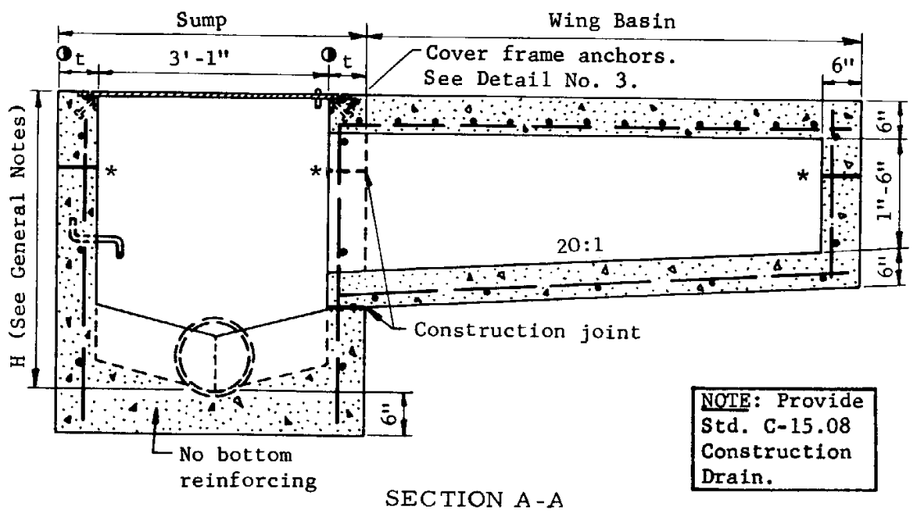

SECTION A-A

NOTE: Provide Std. C-15.08 Construction Drain.

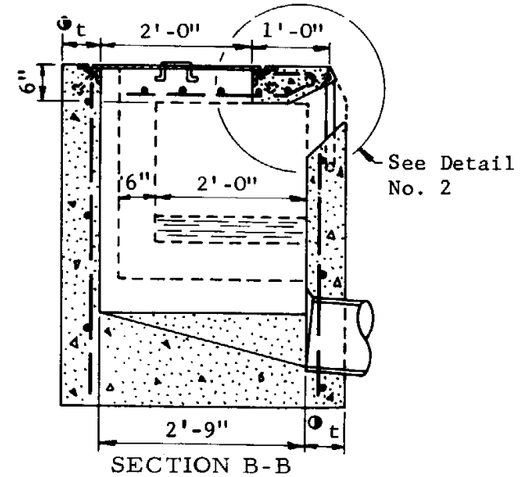

SECTION B-B

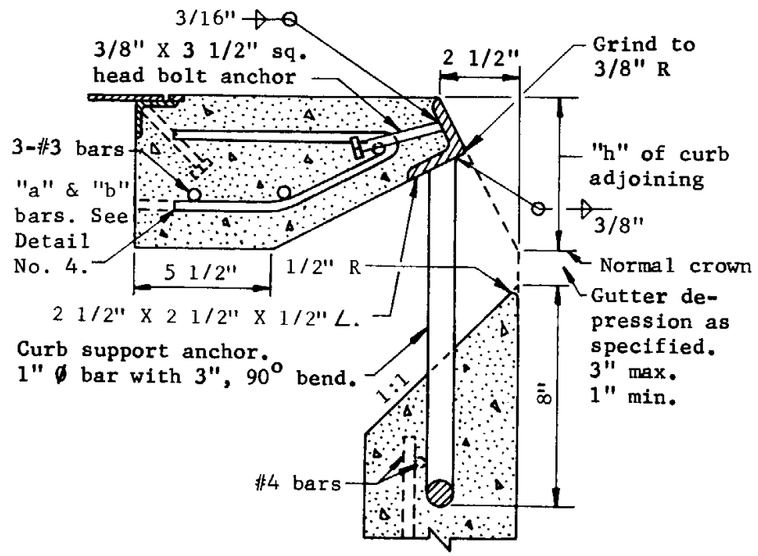

DETAIL NO. 2

GENERAL NOTES

C.B. 3 sump only.

C.B. 3-Wing (illustrated), sump with wing basin upstream.

C.B. 3-Double Wing, sump with symmetrical wing basins each side.

Pipes can be placed in any wall except wall adjacent to a wing basin.

Sump floor shall have a wood trowel finish and a minimum slope of 4:1 in all directions toward outlet pipe.

Gutter depression shall be warped to opening according to Std. C-15.08.

All structural steel shall be ASTM A 36.

Nose angle shall be given one shop coat of No. 1 paint.

All concrete shall be class A.

All reinforcing bars shall be #4, 1'-6" c to c both ways and 1 1/2" clear to inside of walls and outside of wing basin floor except as shown.

Curb opening area (Sq. Ft.) per inch of curb "h" + gutter depression = curb opening length (ft.) x 0.0834.

Welding shall be in accordance with A.H.D. Welding Manual.

* Construction joints at bottom of curb line.

◑ t = 6" when H = 8' or less
8" when H is greater than 8'.

H = 2'-10" min. when L = 3'
3'- 0" min. when L = 6"
3'- 2" min. when L = 10'
3'- 7" min. when L = 17'

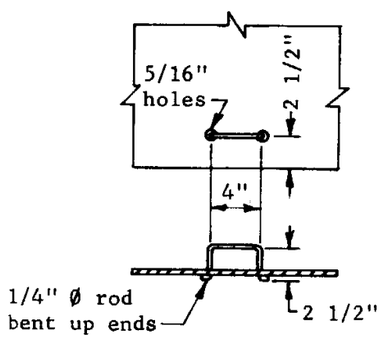

DETAIL NO. 1

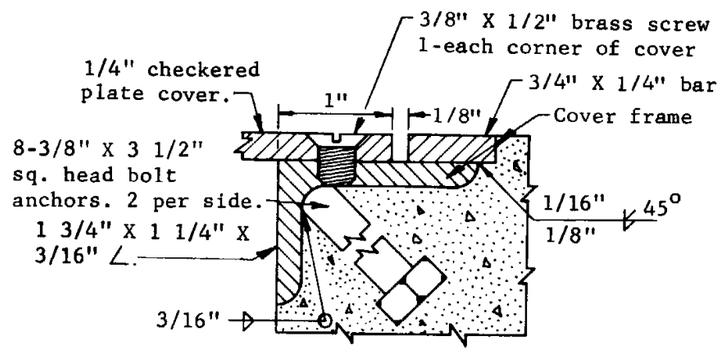

DETAIL NO. 3

Miter frame sections 45°
butt weld and surface grind.

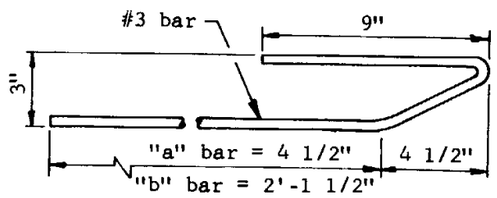

DETAIL NO. 4

ARIZONA HIGHWAY DEPARTMENT
PLANS DIVISION

TYPE 3 CATCH BASIN

Drawn	D.G. 7-67	Drawing No.
Traced	R.A.F. 7-67	C-15.03
Checked	J.P.O. JPO 5-68	
Approved Engr. Plans	G Weidenbach 5-68	

Rev

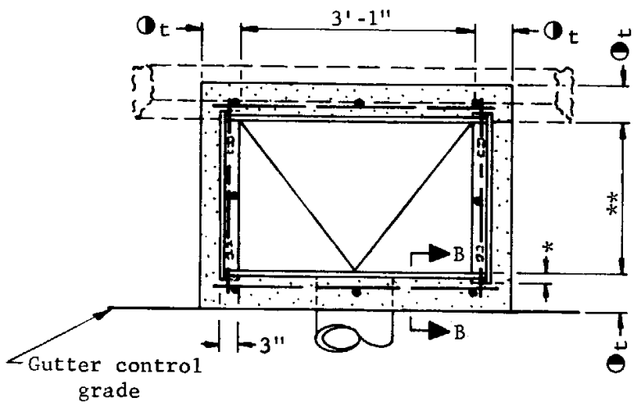

PLAN, CATCH BASIN NO. 4-SINGLE

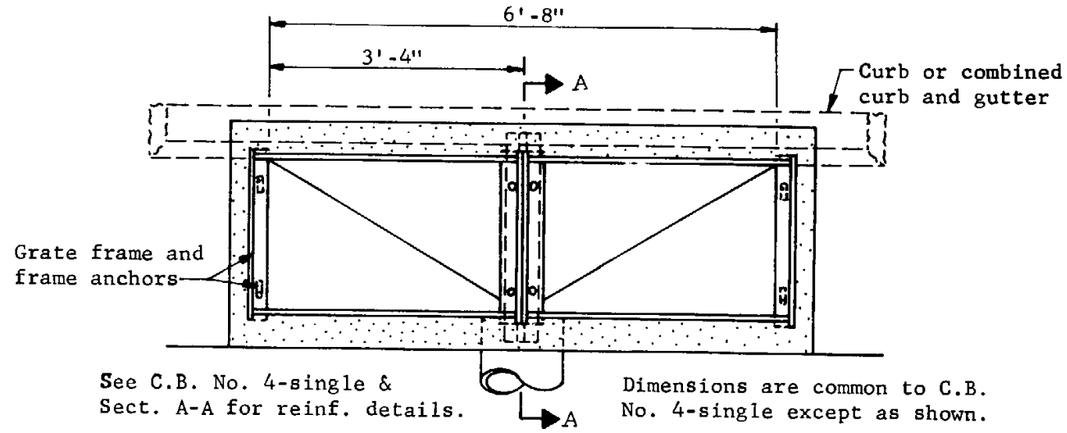

PLAN, CATCH BASIN NO. 4-DOUBLE

GENERAL NOTES

Pipes can be placed in any wall.

Sump floor shall have a wood trowel finish and a minimum slope of 4:1 in all directions toward outlet pipe.

Curb over catch basin shall not be constructed until catch basin concrete has set for a minimum of 24 hours.

For grate and frame details and opening areas, see Stds. C-15.06 and C-15.07.

Any specified gutter depression shall be warped to opening according to Std. C-15.08.

All structural steel shall be ASTM A 36.

Grate support shall be given one shop coat of No. 1 paint.

All concrete shall be Class A.

NOTE: Provide Std. C-15.08 Construction Drain.

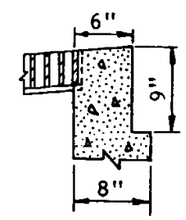

SECTION B-B

Use this section when t = 8"

* 3/4" for LW or LB grates.
3" for TW or TB grates.

** 2'-0" for LW-1, LB-1, TW-1 and TB-1 grates. 1'-6" for LW-2, LB-2, TW-2 and TB-2 grates. Use 1'-6" dimension when catch basin is used with combined curb and gutter.

◑t = 6" when H = 8' or less
8" when H is greater than 8'. (See Section B-B)

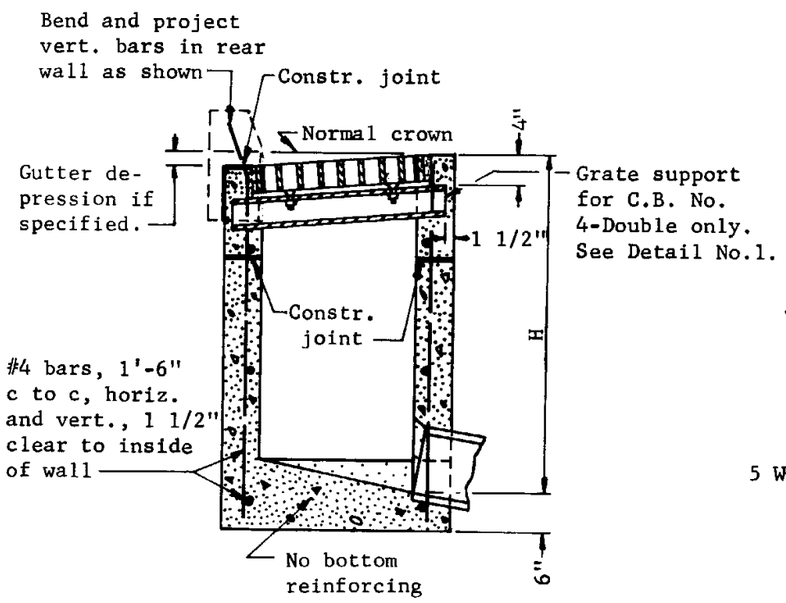

SECTION A-A

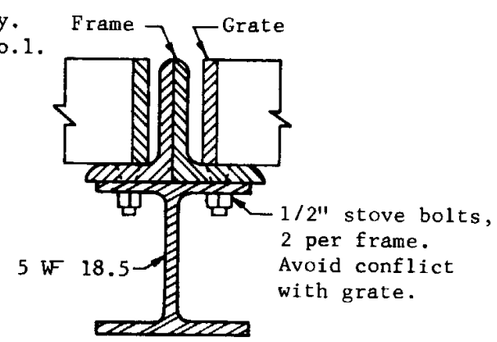

DETAIL NO. 1

ARIZONA HIGHWAY DEPARTMENT PLANS DIVISION			Rev
TYPE 4 CATCH BASIN			
Drawn	D.G. 6-67	Drawing No.	
Traced	S.L.T. 7-67		
Checked	J.P.O. JPO 5-68	C-15.04	
Approved Engr. Plans	[illegible] 5-68		

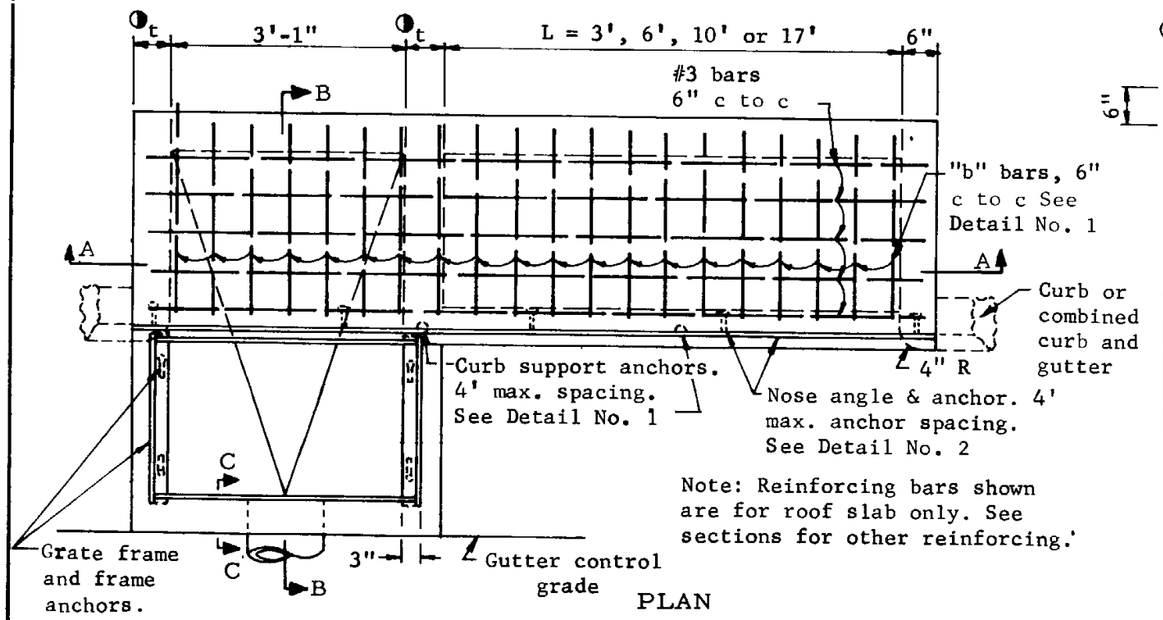

PLAN

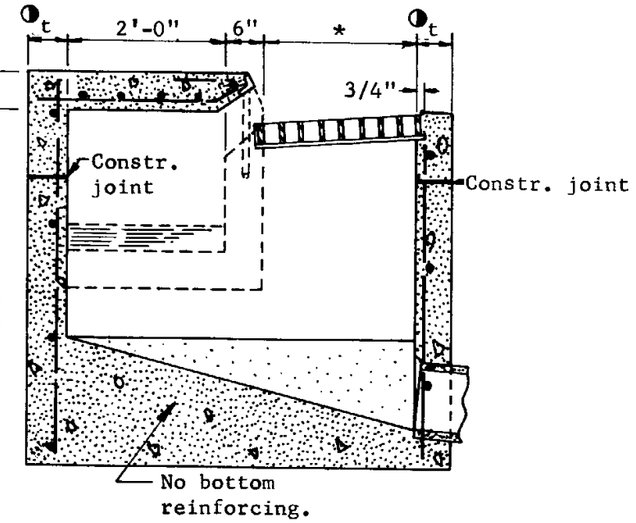

SECTION B-B

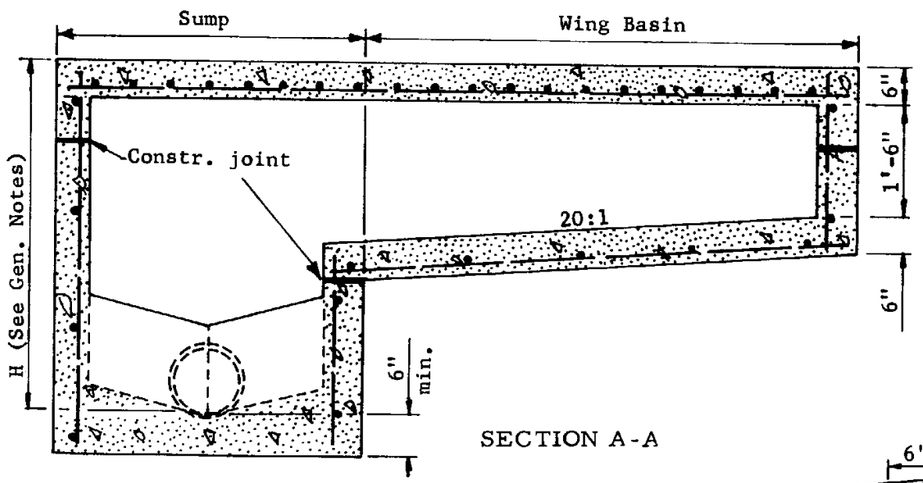

SECTION A-A

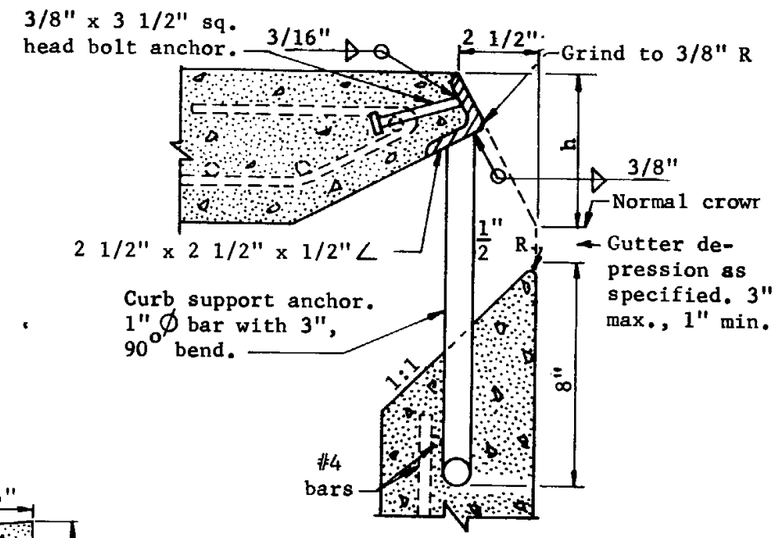

DETAIL NO. 2

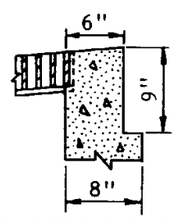

SECTION C-C
Use this section
when t = 8"

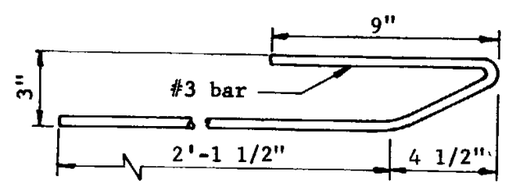

DETAIL NO. 1

NOTE: Provide
Std. C-15.08
Construction
Drain.

GENERAL NOTES

C.B. 5, sump only.

C.B. 5 Single, (illustrated), sump with wing basin upstream.

C.B. 5 Double, sump with symmetrical wing basins each side.

Pipes can be placed in any wall except wall adjacent to a wing basin.

Sump floor shall have a wood trowel finish and a minimum slope of 4:1 in all directions toward outlet pipe.

Welding shall be in accordance with A.H.D. Welding Manual.

Gutter depression shall be warped to opening according to Std. C-15.08.

All structural steel shall be in accordance with ASTM A 36.

Nose angle shall be painted with one No. 1 shop coat.

All concrete shall be Class A.

All reinforcing bars shall be #4, 18" c to c both ways and 1 1/2" clear to inside of walls and outside of wing basin floor except as shown.

Curb opening area (Sq. Ft.) per inch of curb "h" + gutter depression = curb opening length (Ft.) X 0.0834.

For grate and frame details and opening areas, see Stds. C-15.06 and C-15.07.

t = 6" when H = 8' or less; 8" when H is greater than 8'. (See Section C-C)

*2'-0" for LW-1 and LB-1 grates; 1'-6" for LW-2 and LB-2 grates. Use 1'-6" dimension when catch basin is used with combined curb and gutter.

H = 3'-3" min. when L = 3'
3'-5" min. when L = 6'
3'-7" min. when L = 10'
4'-0"mmin. when L = 17'

ARIZONA HIGHWAY DEPARTMENT
PLANS DIVISION

Rev

TYPE 5 CATCH BASIN

Drawn	D.G. 7-67	Drawing No.
Traced	S.L.T. 7-67	C-15.05
Checked	J.P.O. JPO 5-68	
Approved Engr. Plans	Weidenbach 5-68	

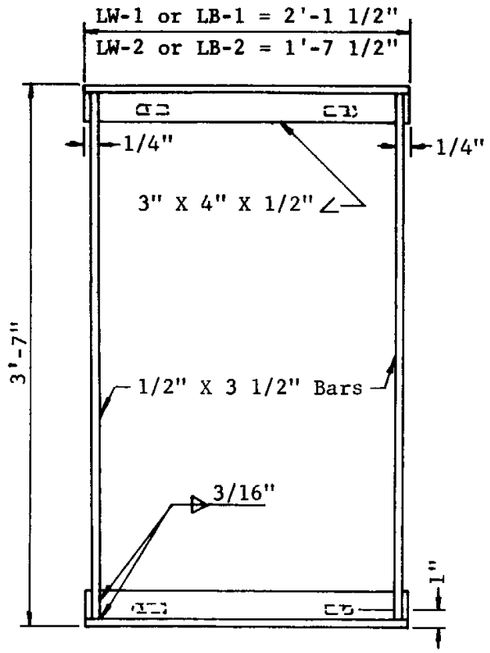

PLAN

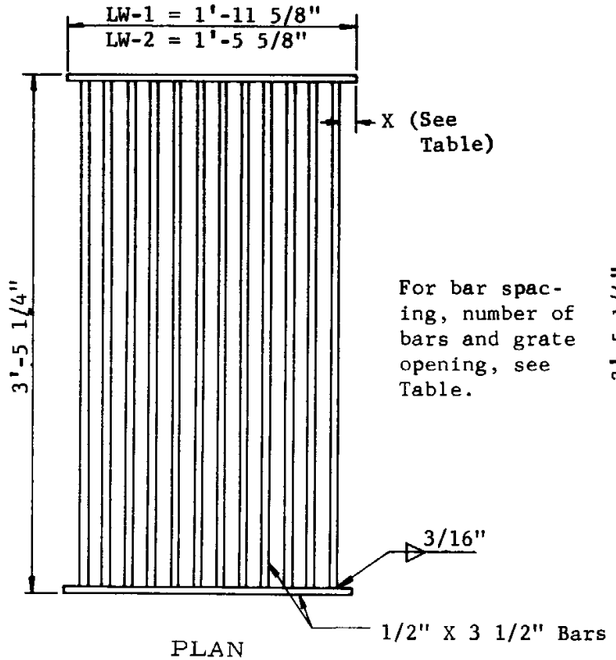

For bar spacing, number of bars and grate opening, see Table.

PLAN

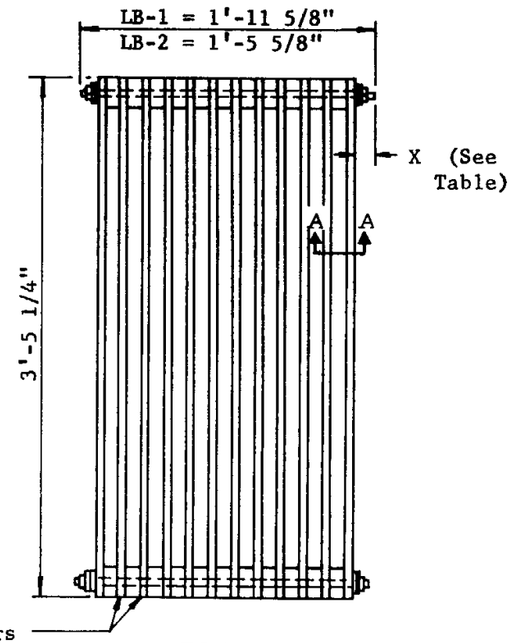

PLAN

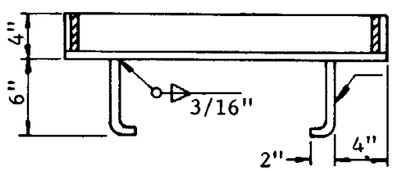

-3/8" Anchors. Delete on one end when used with I-beam support.

SECTION

FRAME

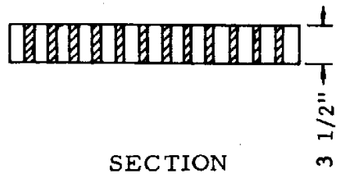

SECTION

GRATE TYPES LW-1 & LW-2

Restricted to use on longitudinal grades of 3% and less.

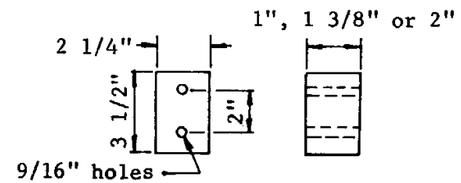

BAR SPACER DETAIL

Cast iron, cast steel or steel bar stock.

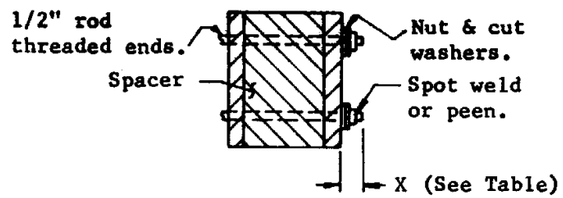

SECTION A-A

GRATE TYPES LB-1 & LB-2

For use on longitudinal grades in excess of 3% or as an alternate to Type LW on grades of 3% or less.

GENERAL NOTES

Grating units and frames shall be fabricated from structural steel except as noted. Structural steel shall be in accordance with ASTM A 36.

Welding shall be in accordance with A.H.D. Welding Manual.

The completed assembly shall be given one shop coat of No. 1 paint.

LW indicates longitudinal welded.
LB indicates longitudinal bolted.

Type	Clear Spacing	No. Bars	X	Grate Opening Sq. Ft.
LW or LB-1.0	1"	16	5/16"	4.58
LW or LB-1.1	1 3/8"	12	1 1/4"	4.99
LW or LB-1.2	2"	9	1 9/16"	5.41
LW or LB-2.0	1"	12	5/16"	3.47
LW or LB-2.1	1 3/8"	9	1 1/16"	3.75
LW or LB-2.2	2"	7	1 1/16"	4.03

ARIZONA HIGHWAY DEPARTMENT
PLANS DIVISION

CATCH BASIN GRATE LB AND LW GRATES

Drawn	D.G. 7-66	Drawing No.
Traced	S.L.T. 7-67	
Checked	J.P.O. JPO 5-68	C-15.06
Approved Engr. Plans	J Weidecker 5-68	

Rev

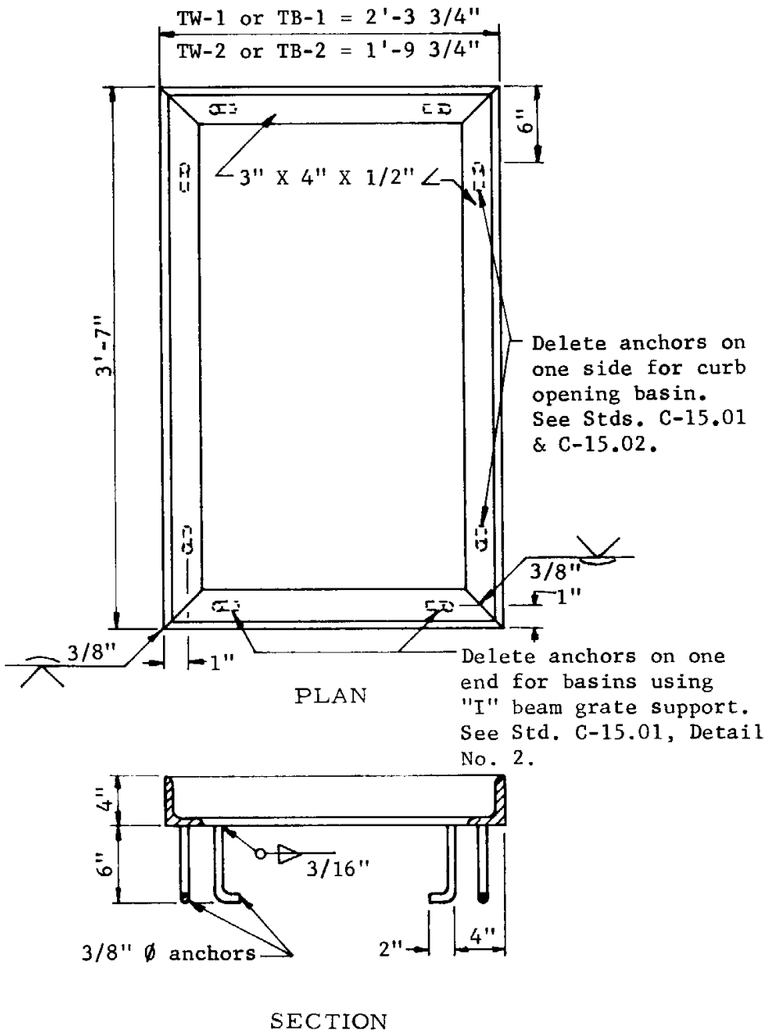

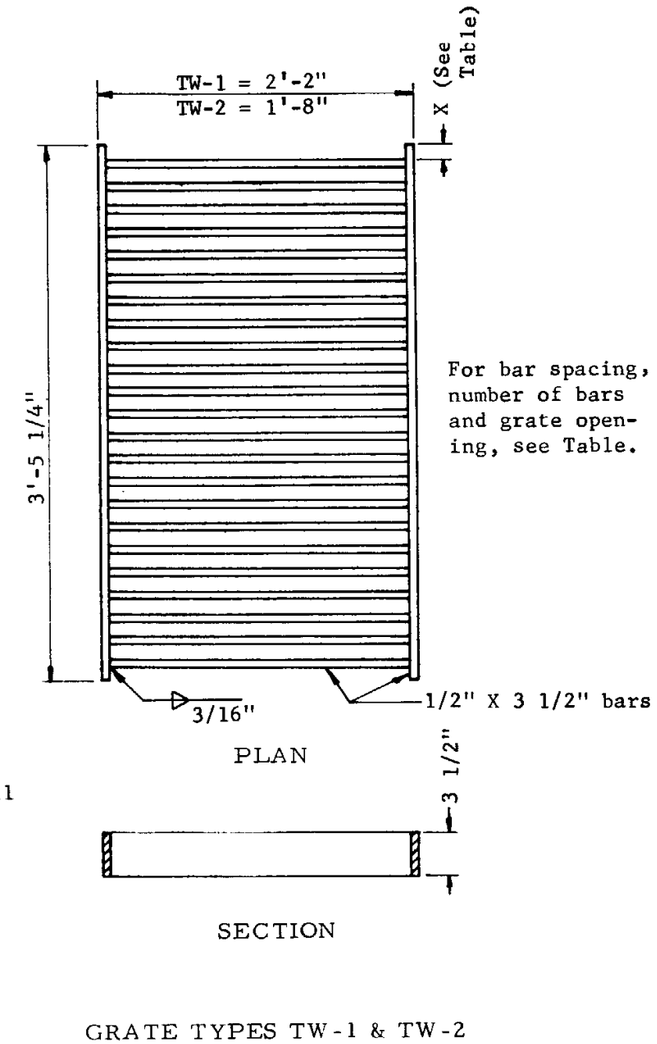

GRATE TYPES TW-1 & TW-2

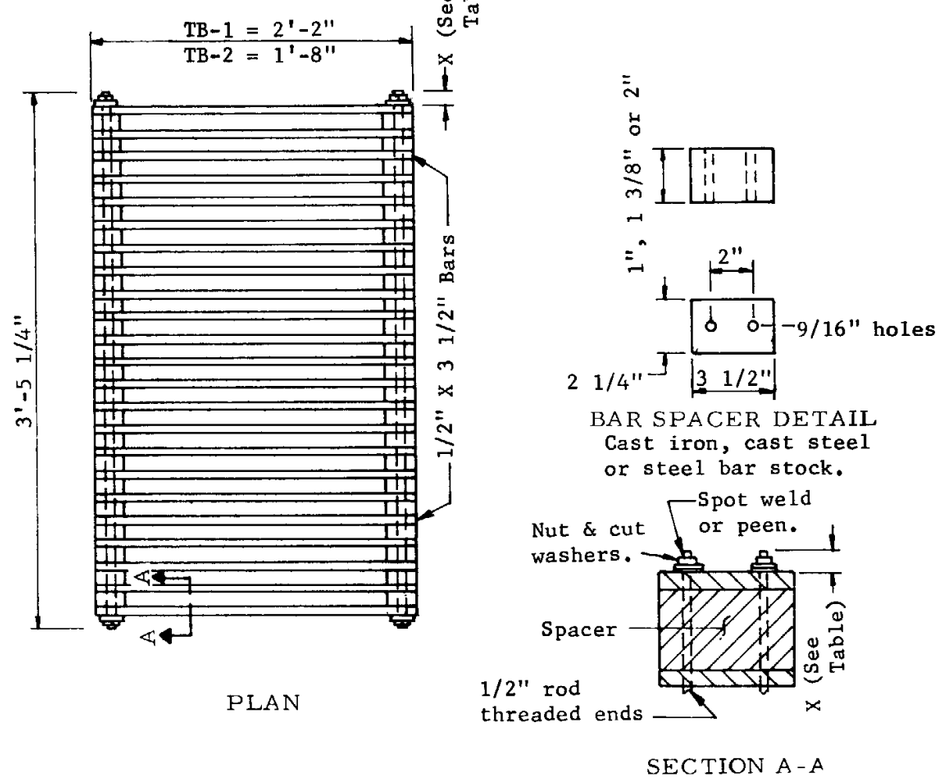

GRATE TYPES TB-1 & TB-2

Type	Clear Spacing	No. Bars	X	Grate Opening Sq. Ft.
TW or TB-1.0	1"	28	7/8"	3.47
TW or TB-1.1	1 3/8"	22	11/16"	3.93
TW or TB-1.2	2"	16	1 5/8"	4.31
TW or TB-2.0	1"	28	7/8"	2.51
TW or TB-2.1	1 3/8"	22	11/16"	2.83
TW or TB-2.2	2"	16	1 5/8"	3.11

GENERAL NOTES

Grating units and frames shall be fabricated from structural steel except as noted. Structural steel shall be in accordance with ASTM A 36.

Welding shall be in accordance with A.H.D. Welding Manual.

The completed assembly shall be given one shop coat of No. 1 paint.

TW indicates transverse welded.
TB indicates transverse bolted.

ARIZONA HIGHWAY DEPARTMENT
PLANS DIVISION

CATCH BASIN GRATE TB AND TW GRATES

Drawn	D.G. 6-67	Drawing No.
Traced	S.L.T. 7-67	C-15.07
Checked	J.P.O. JPO 5-68	
Approved Engr. Plans	G.Heidecker 5-68	

Rev

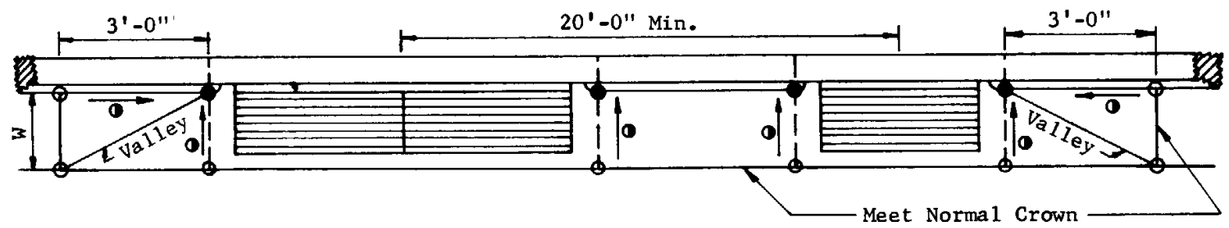

CATCH BASIN TYPES 1, 2, 4-SINGLE, 4-DOUBLE & 5-SINGLE
(Grate opening only or combination; showing minimum spacing for Catch Basins in series.)

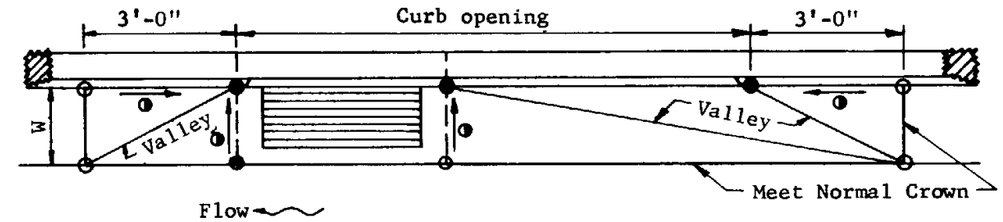

CATCH BASIN TYPES 5-SINGLE & 5-DOUBLE

LEGEND
Gutter depression: 3" max. (See Detail No. 1)
O = Normal crown or gutter flow line elevation.
● = Depressed elevation.
◑ = Straight grade with downward slope.
W = Normal gutter width per Std. C-5.01

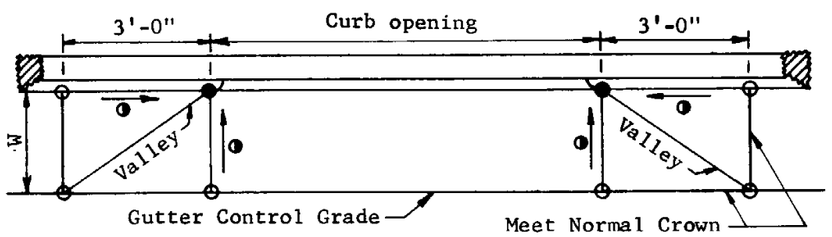

CATCH BASIN TYPE 3
(Curb opening only.)

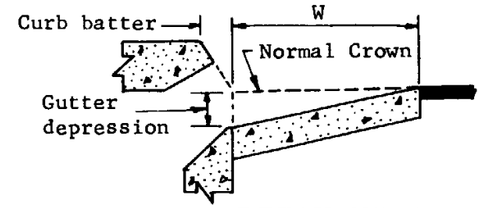

DETAIL NO. 1

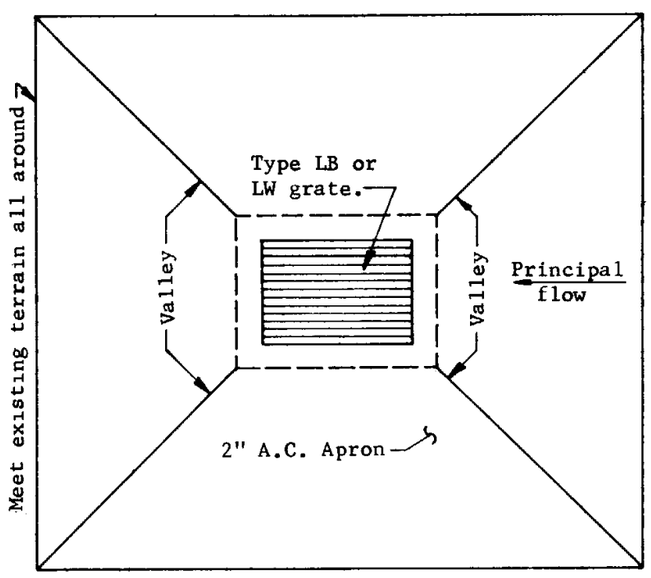

Apron shall be shaped to suit local conditions and shall extend a minimum of 4'-0" from edge of grate in all directions. Grate shall be depressed a minimum of 4" below surrounding terrain and bars shall parallel direction of principal flow.

CATCH BASIN TYPE 4
(Off roadway location)

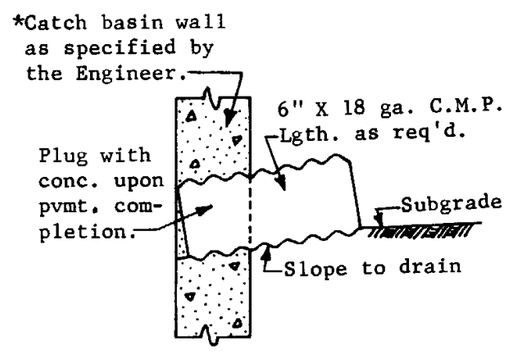

CATCH BASIN
CONSTRUCTION DRAIN
*Drain may be deleted at option of Engineer

GENERAL NOTES
No gutter depression shall be used adjacent to median.

ARIZONA HIGHWAY DEPARTMENT PLANS DIVISION			Rev
CATCH BASIN DEPRESSED APRON & CONSTRUCTION DRAIN			
Drawn	S.L.T. 10-67	Drawing No.	
Traced	S.L.T. 10-67	C-15.08	
Checked	J.P.O. JPO 5-68		
Approved Engr. Plans	G.Weidecker 5-68		

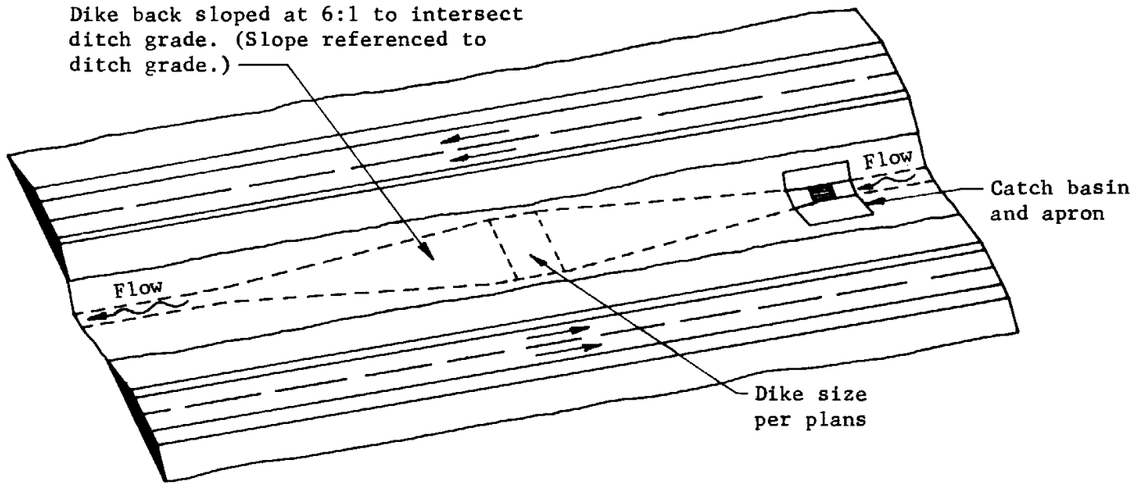

PLAN PERSPECTIVE
ILLUSTRATING 1-WAY FLOW WITH DYKE

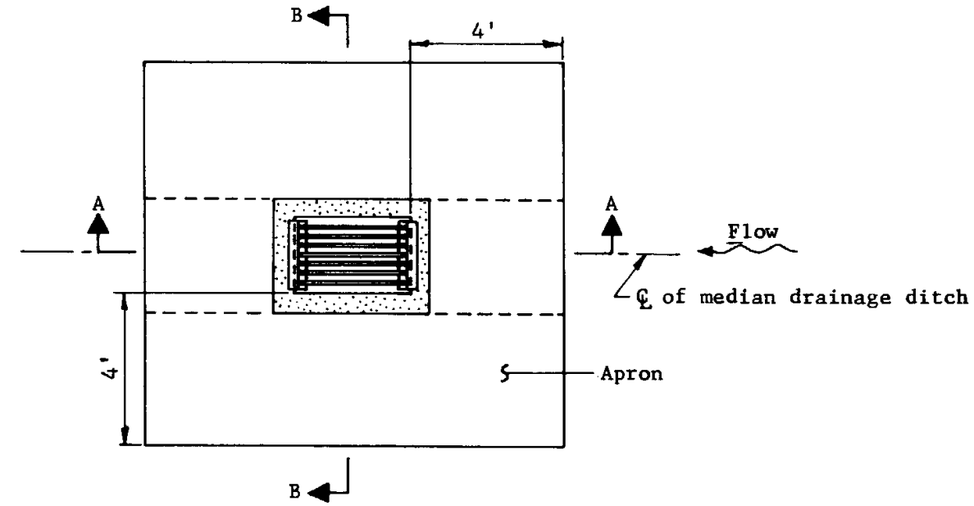

PLAN

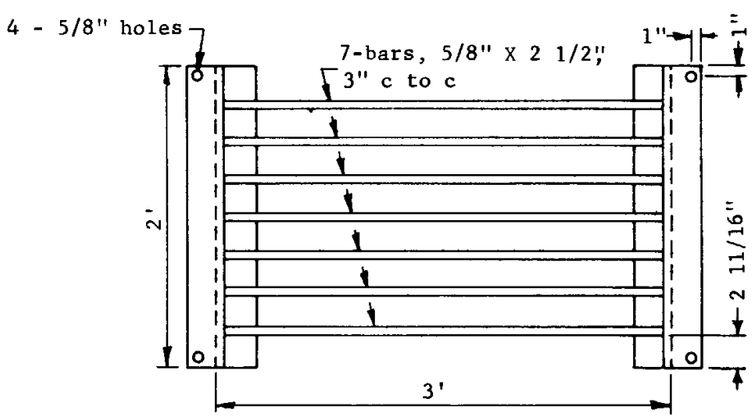

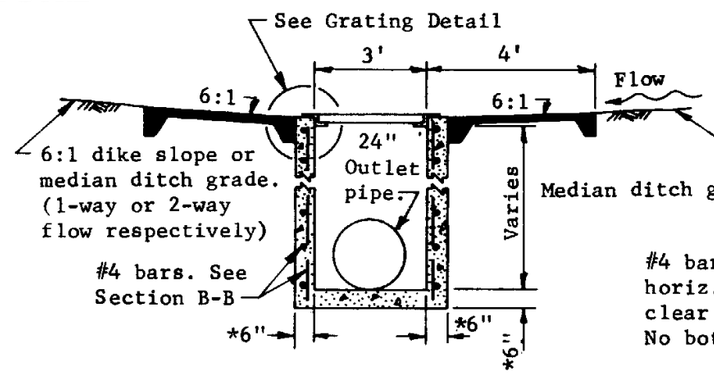

SECTION A-A

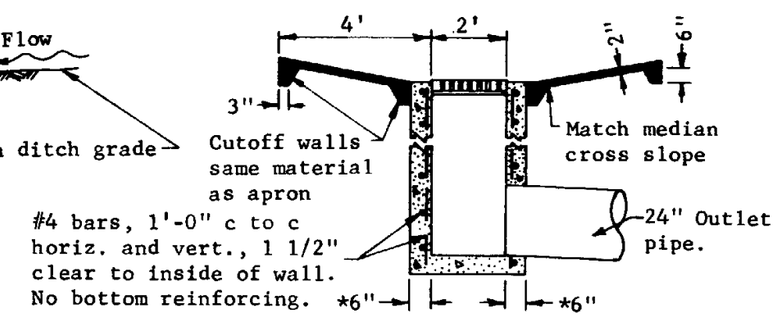

SECTION B-B

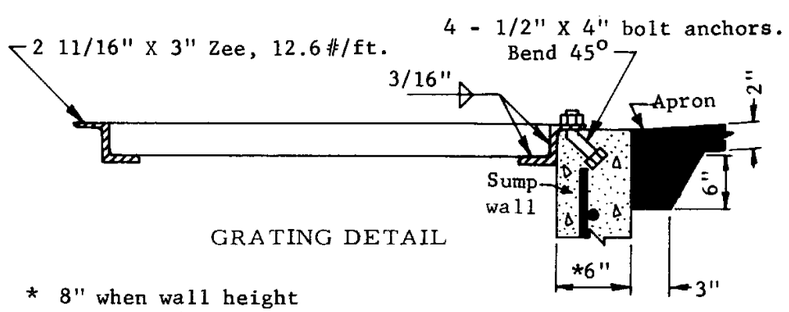

GRATING DETAIL

* 8" when wall height exceeds 8'.

GENERAL NOTES

Apron shall be A. C. or P. C. concrete as specified on Plans.

Concrete shall be Class A.

Grating shall be fabricated of structural steel. Structural steel shall be in accordance with ASTM A 36.

Welding shall be in accordance with A.H.D. Welding Manual.

Grating assembly shall be given one shop coat of No. 1 paint.

ARIZONA HIGHWAY DEPARTMENT PLANS DIVISION			Rev
MEDIAN CATCH BASIN			
Drawn	D.G. 3-68	Drawing No.	
Traced	R.A.F. 3-68		
Checked	J.P.O. JPO 5-68	C-15.09	
Approved Engr. Plans	G Heidecker 5-68		

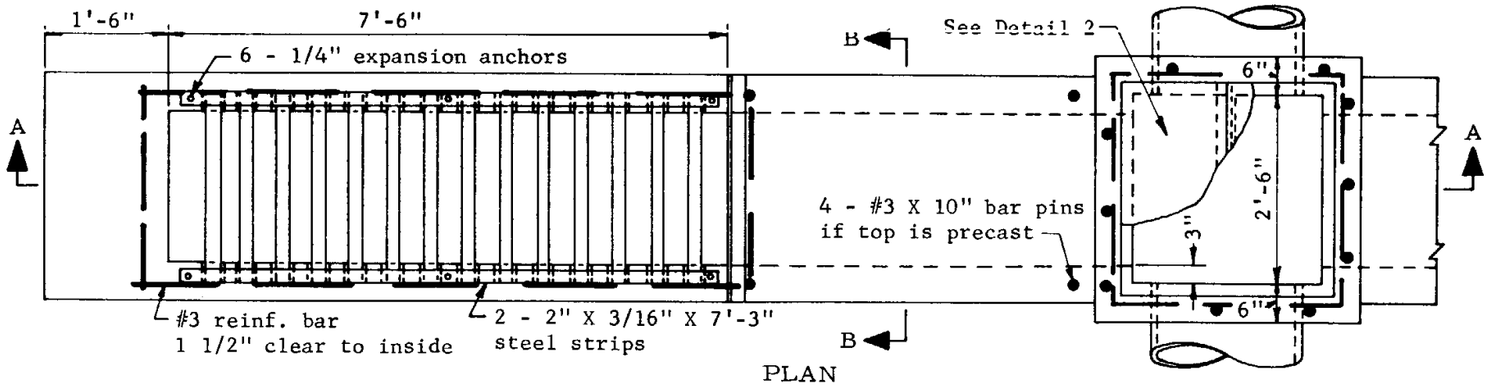

PLAN

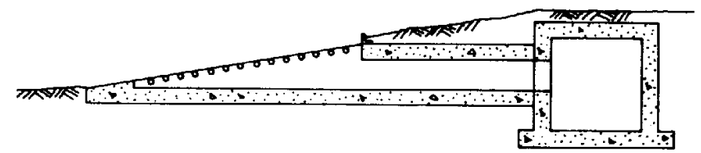

INLET TO BOX CULVERT
(See Bridge sheets for details)

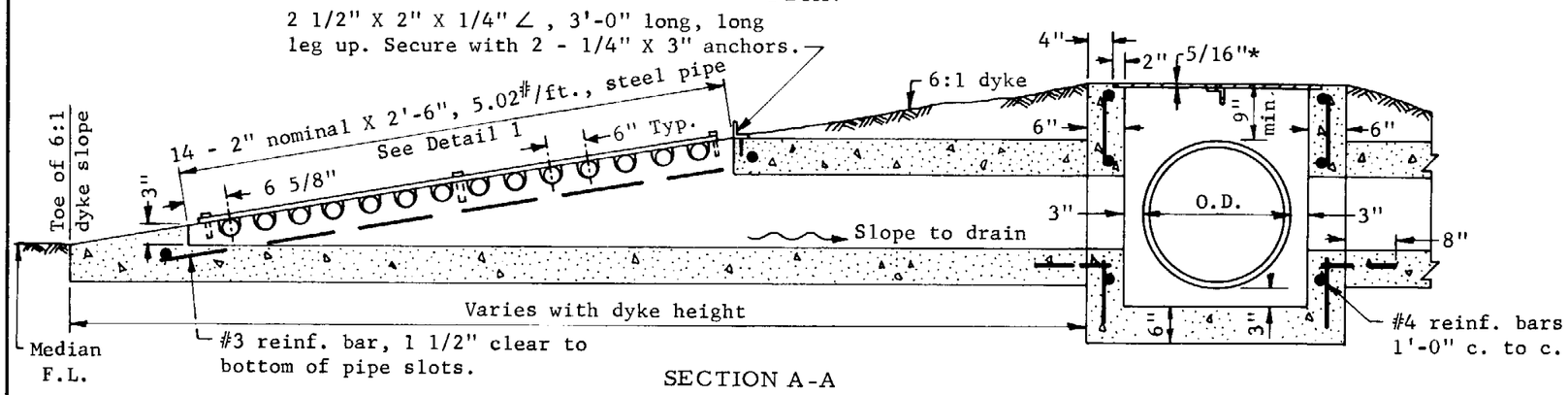

SECTION A-A

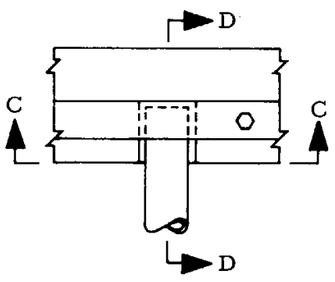

DETAIL 1

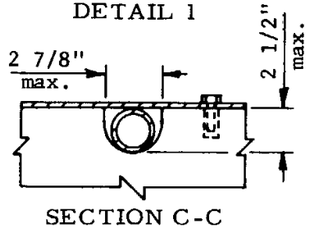

SECTION C-C

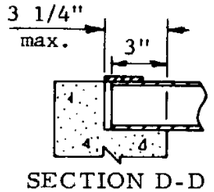

SECTION D-D

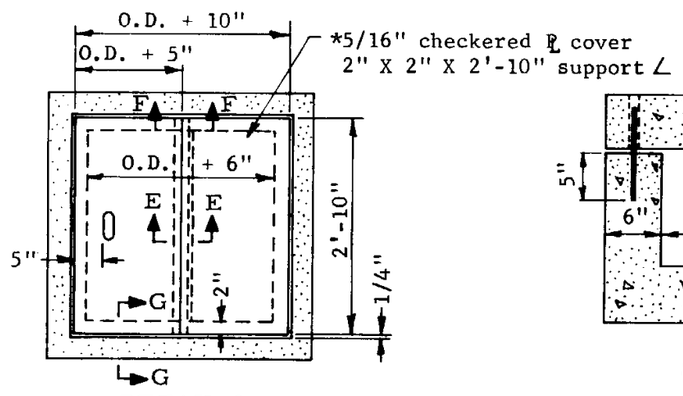

DETAIL 2

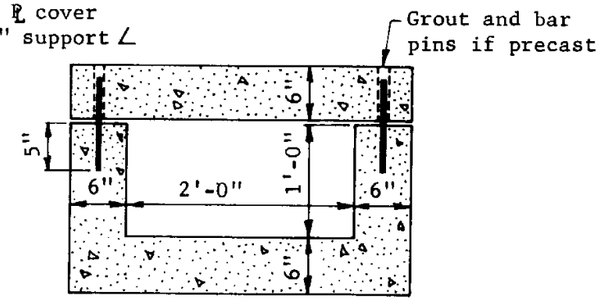

SECTION B-B

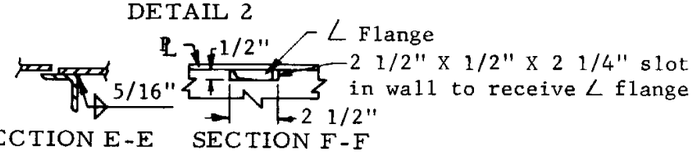

SECTION E-E SECTION F-F

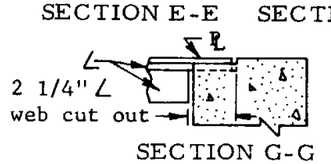

SECTION G-G

GENERAL NOTES

All concrete shall be Class A.

Steel pipe, plate and strip shall be in accordance with ASTM A 36.

Exposed steel shall be given one shop coat of No. 1 paint.

*When O.D. + 5" exceeds 1'-11", use 3/8" plate.

ARIZONA HIGHWAY DEPARTMENT PLANS DIVISION			Rev
MEDIAN DYKE CATCH BASIN			
Drawn	D.G. 3-68	Drawing No.	
Traced	R.A.F. 4-68		
Checked	J.P.O. JPO 5-68	C-15.10	
Approved Engr. Plans	G. Heidenreich 5-68		

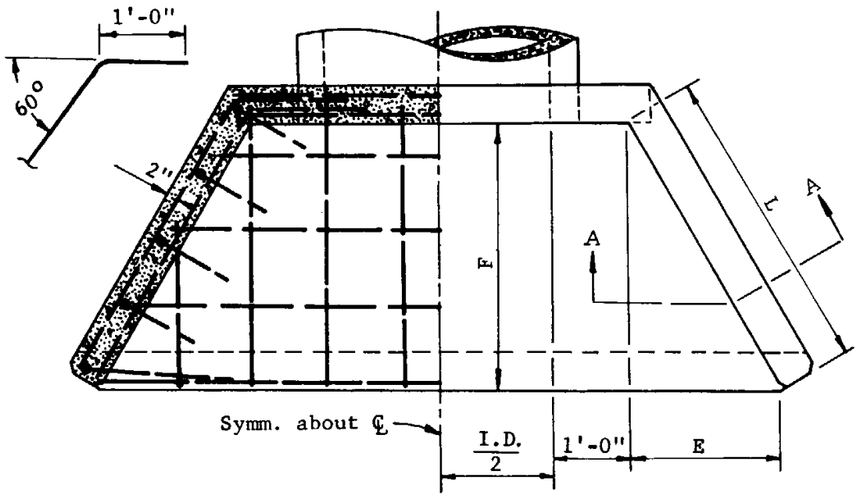

PLAN

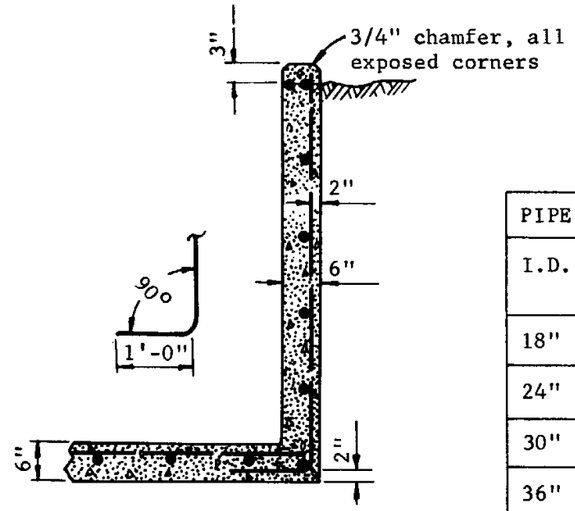

SECTION A-A

PIPE	DIMENSIONS			QUANTITIES		
I.D.	L	E	F (Approx)	C.Y. Conc. C.M.P.	C.Y. Conc. R.C.P.	Reinf.Steel Lbs.
18"	2'-0"	1'-0"	1'-9"	0.97	0.96	65
24"	2'-0"	1'-0"	1'-9"	1.11	1.07	78
30"	3'-0"	1'-6"	2'-7"	1.50	1.44	108
36"	4'-0"	2'-0"	3'-6"	2.08	2.01	150
42"	5'-0"	2'-6"	4'-4"	2.71	2.63	205
48"	6'-0"	3'-0"	5'-2"	3.39	3.30	270
54"	7'-0"	3'-6"	6'-1"	4.14	4.02	335
60"	8'-0"	4'-0"	6'-11"	4.96	4.80	410

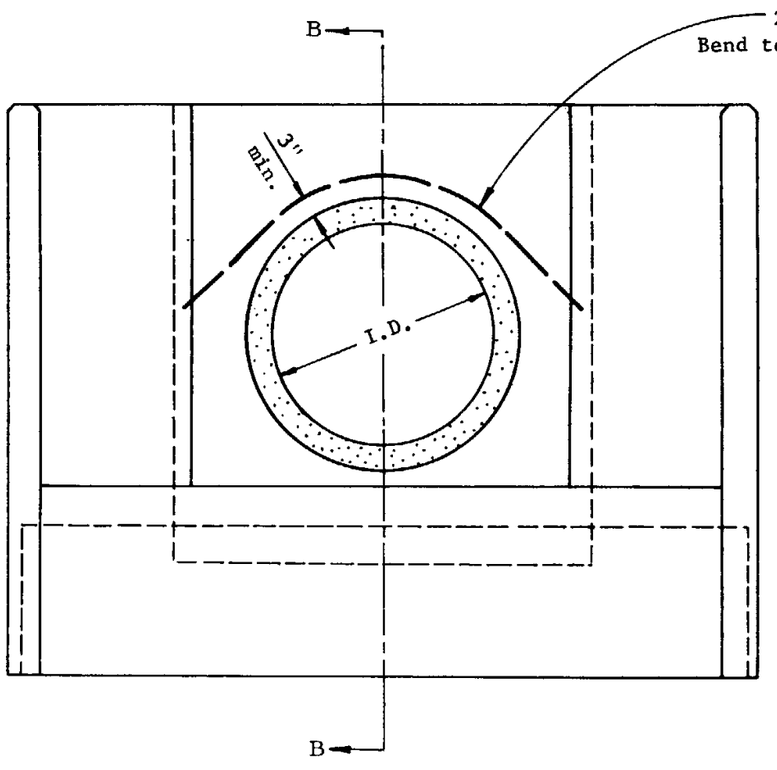

ELEVATION

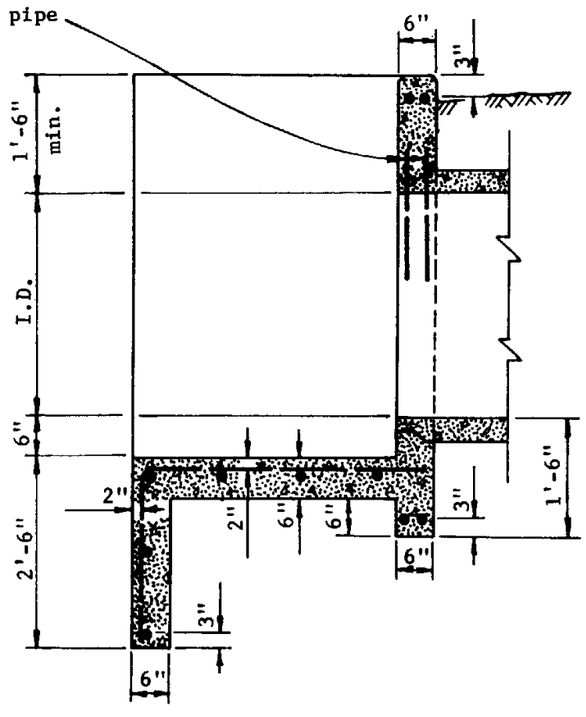

SECTION B-B

GENERAL NOTES

All concrete shall be Class A.

All reinforcing bars shall be #4 except two #6 bars over pipe. Bar spacing approximately 1'-0" c to c unless otherwise noted.

ARIZONA HIGHWAY DEPARTMENT
PLANS DIVISION

IRRIGATION HEADWALLS 18" TO 60" DIAMETER PIPES

Drawn	R.J.J.	3-10-58	Drawing No.
Traced	S.L.T.	5-4-67	
Checked	J.P.O.	JPO 5-68	C-16.01
Approved Engr. Plans		G Weidecker 5-68	

Rev

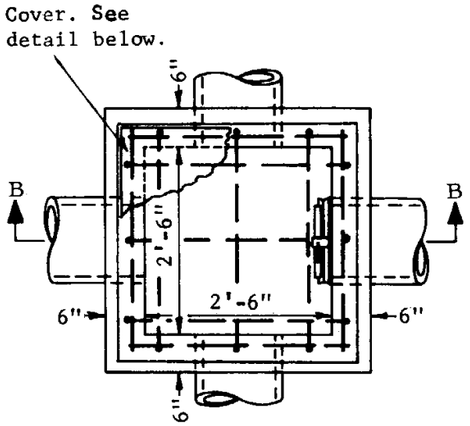

PLAN

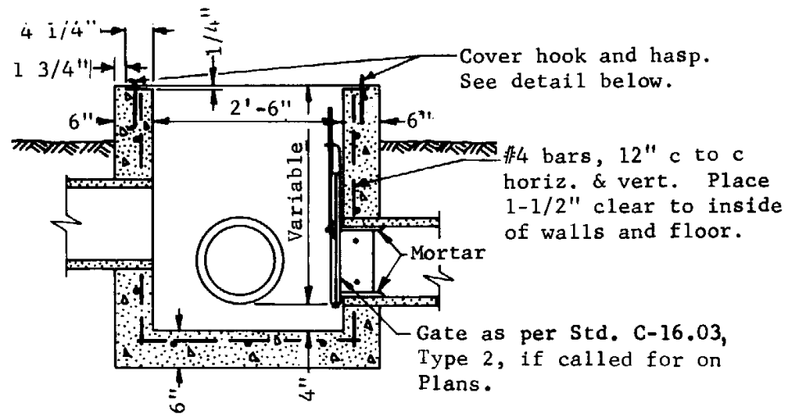

SECTION B-B

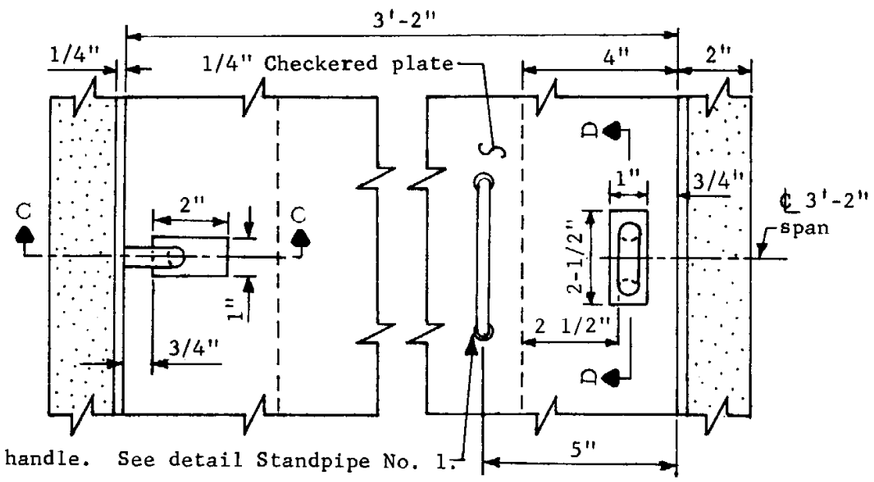

PLAN-LOCKING COVER

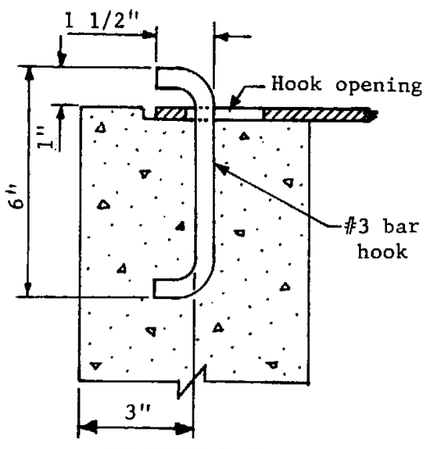

SECTION C-C

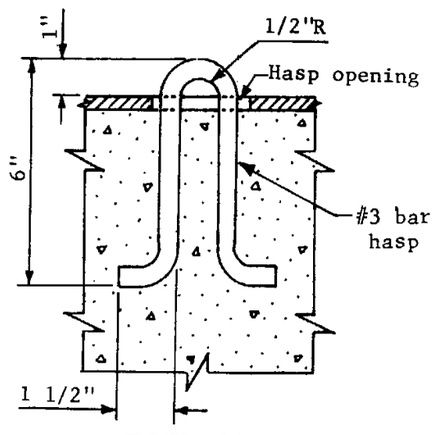

SECTION D-D

IRRIGATION STANDPIPE NO. 2

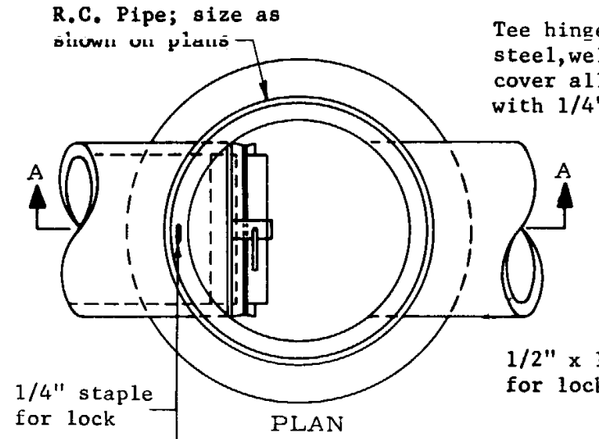

PLAN

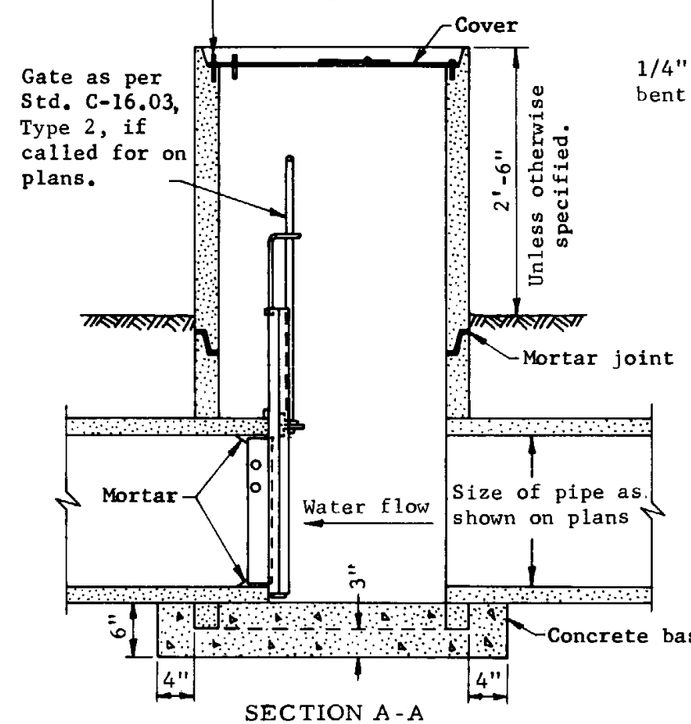

SECTION A-A

IRRIGATION STANDPIPE NO. 1

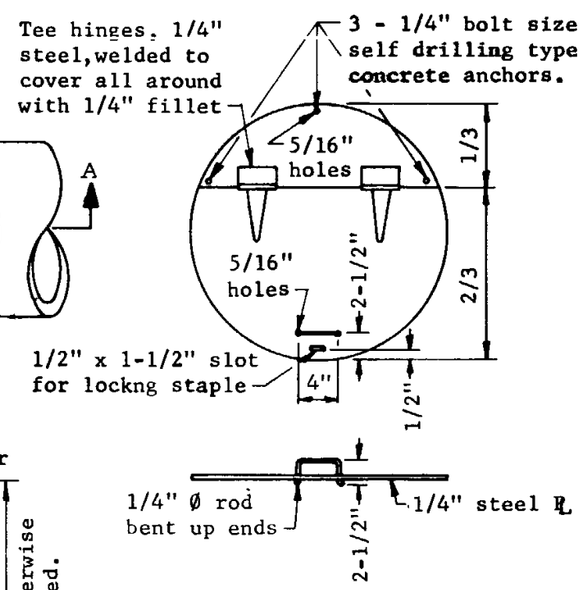

COVER FOR NO. 1 STANDPIPE

GENERAL NOTES

All concrete shall be Class A.

Structural steel shall be in accordance with ASTM A 36.

All cover steel and exposed appurtenances shall be given one shop coat of No. 1 paint.

Plans shall specify locked or bolted cover for Standpipe No. 2

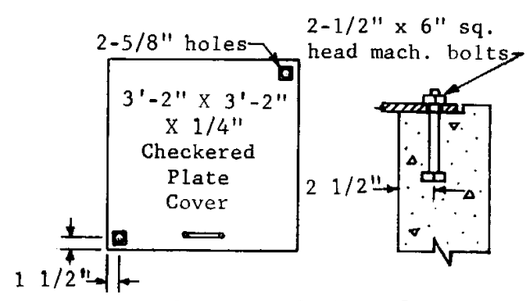

BOLTED COVER FOR STANDPIPE NO. 2

ARIZONA HIGHWAY DEPARTMENT
PLANS DIVISION

IRRIGATION STANDPIPE NO. 1 AND NO. 2

Drawn	D.G.	Drawing No.
Traced	R.A.F. 10-67	C-16.02
Checked	J.P.O. 5-68	
Approved Engr. Plans	G. Weidecker 5-68	

Rev

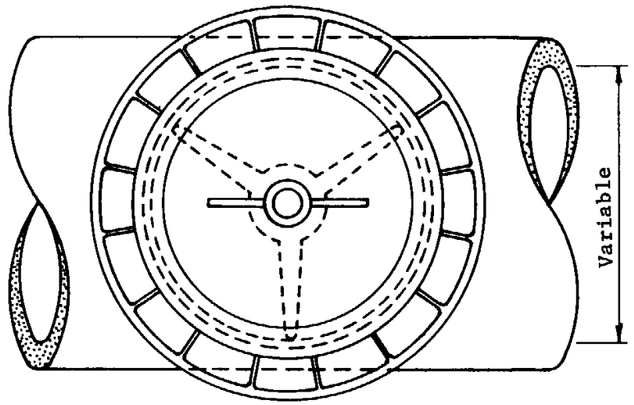

PLAN

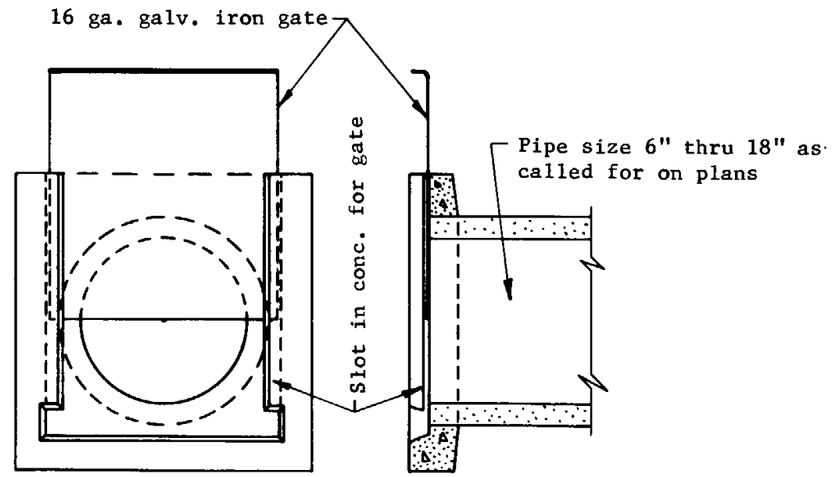

ELEVATION SECTION

PRECAST IRRIGATION GATE
For open ditch installation
TYPE 1

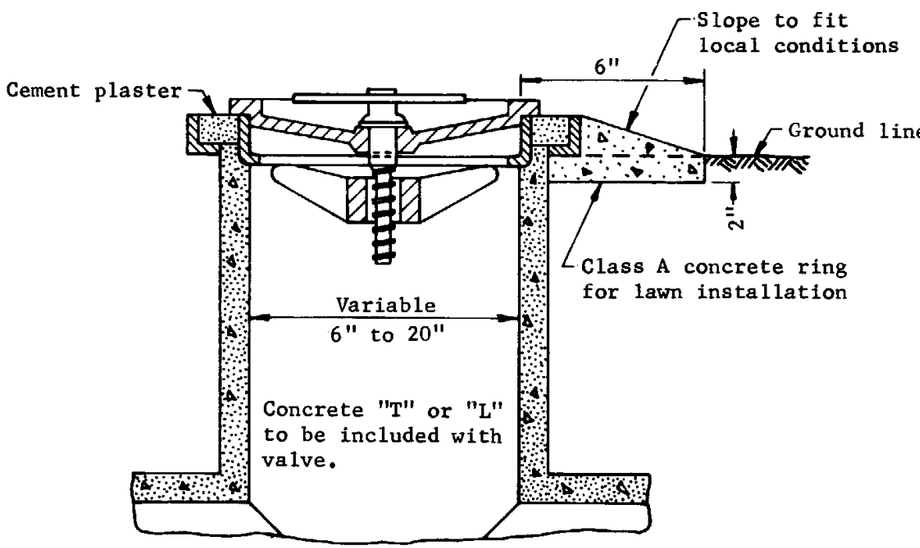

Irrigation Valve Number of valve shall correspond to the size of the pipe in inches. No. 6 to No. 20.

PART SECTION
FLUSH IRRIGATION VALVE

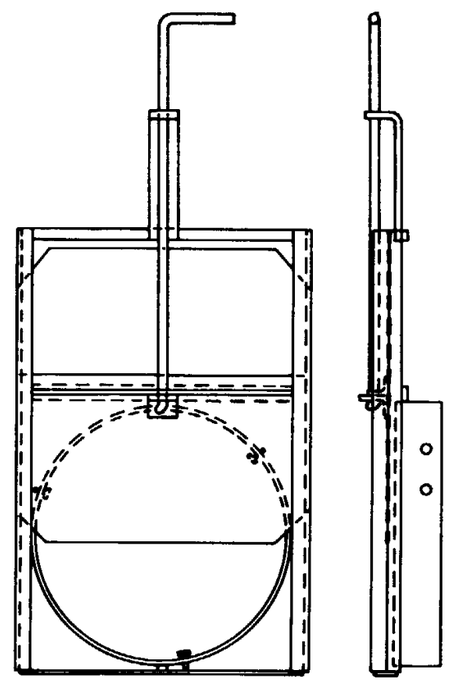

ELEVATION SECTION

IRRIGATION GATE
For standpipe installation
TYPE 2

TYPE 2

For pipes 6" through 24". Gate and frame shall be galvanized iron. Type shown is for concrete pipe. For C.M.P., external steel adjustable band shall be used in place of internal steel ring.

ARIZONA HIGHWAY DEPARTMENT PLANS DIVISION		Rev
IRRIGATION VALVE IRRIGATION GATES		
Drawn	O.K. 12/35	Drawing No.
Traced	R.A.F. 10/66	
Checked	J.P.O. JPO 5-68	C-16.03
Approved Engr. Plans	G.Weidenbe 5-68	

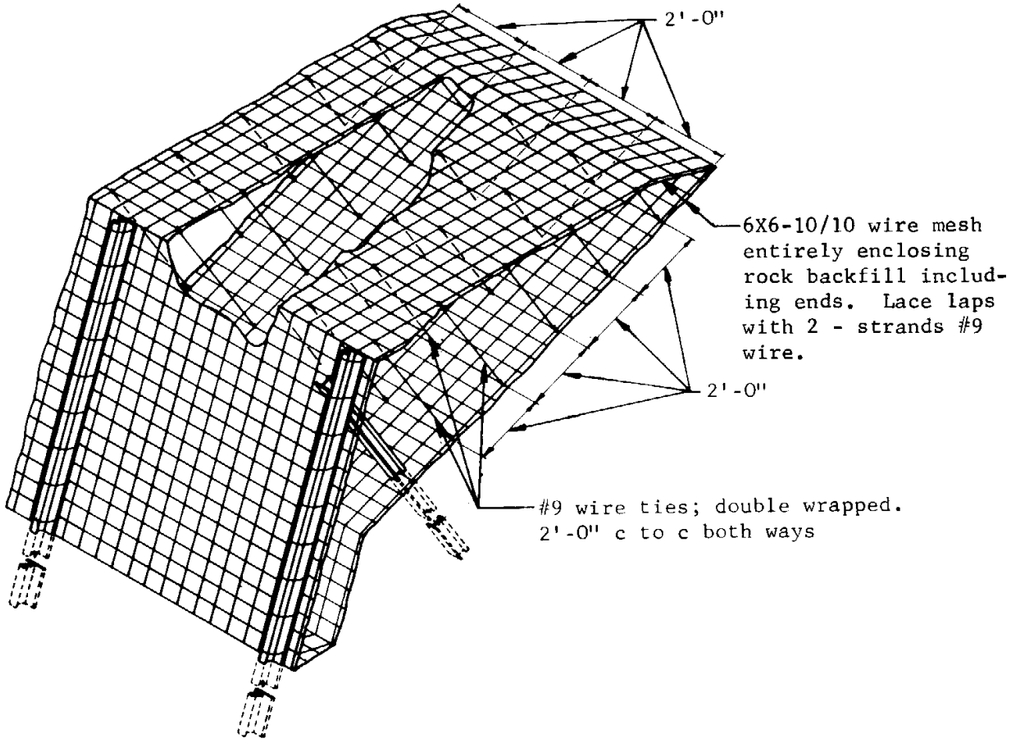

PERSPECTIVE
Drawn for Types 1 & 2. Type 3 similar.

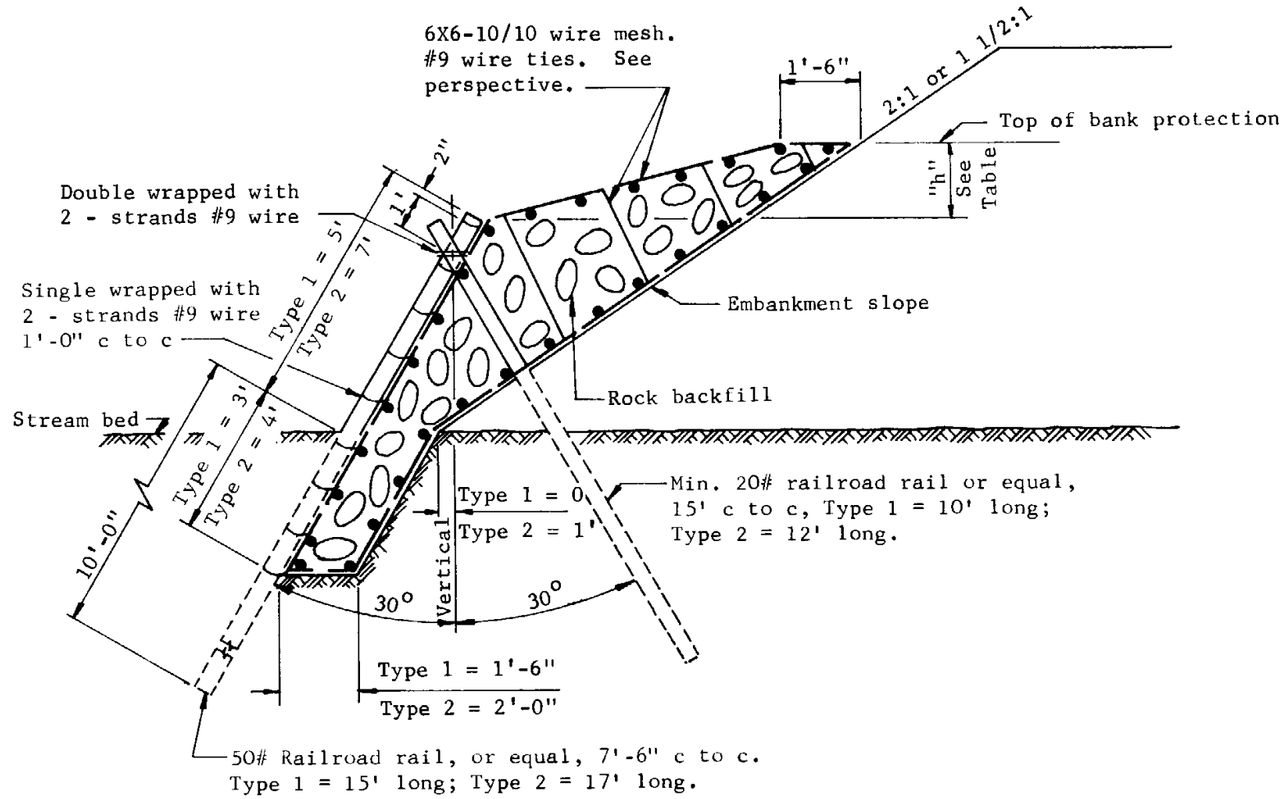

TYPE : TYPE 1 & 2 BANK PROTECTION

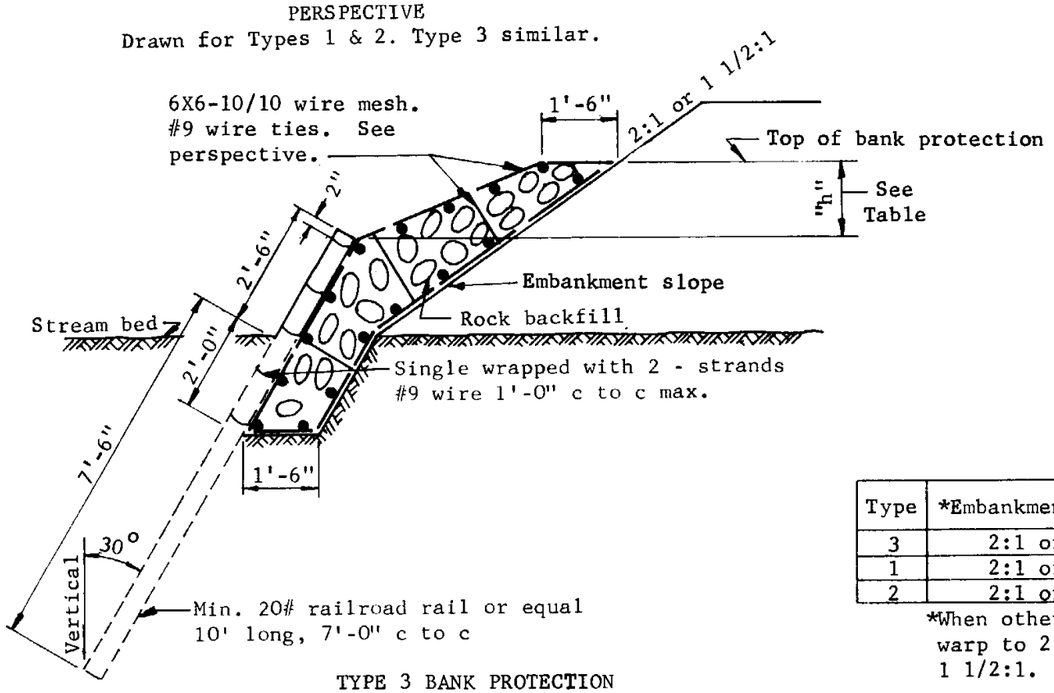

TYPE 3 BANK PROTECTION

Type	*Embankment slope rate	"h"	Top of bank protection above stream bed
3	2:1 or 1 1/2:1	0' to 2'	2' to 4'
1	2:1 or 1 1/2:1	0' to 3'	4' to 7'
2	2:1 or 1 1/2:1	0' to 6'	6' to 12'

*When other embankment slope rates are encountered, warp to 2:1 or 1 1/2:1; that is, warp 1:1 slope to 1 1/2:1.

GENERAL NOTES
Rock for backfill shall not pass a 6" square opening.

ARIZONA HIGHWAY DEPARTMENT
PLANS DIVISION

BANK PROTECTION TYPES 1, 2, & 3

Drawn	H.A.K. 6-35	Drawing No.
Traced	SLT & RAF 7-67	C-17.01
Checked	J.P.O. JPO 5-68	
Approved Engr. Plans	G Weidecker 5-68	

Rev

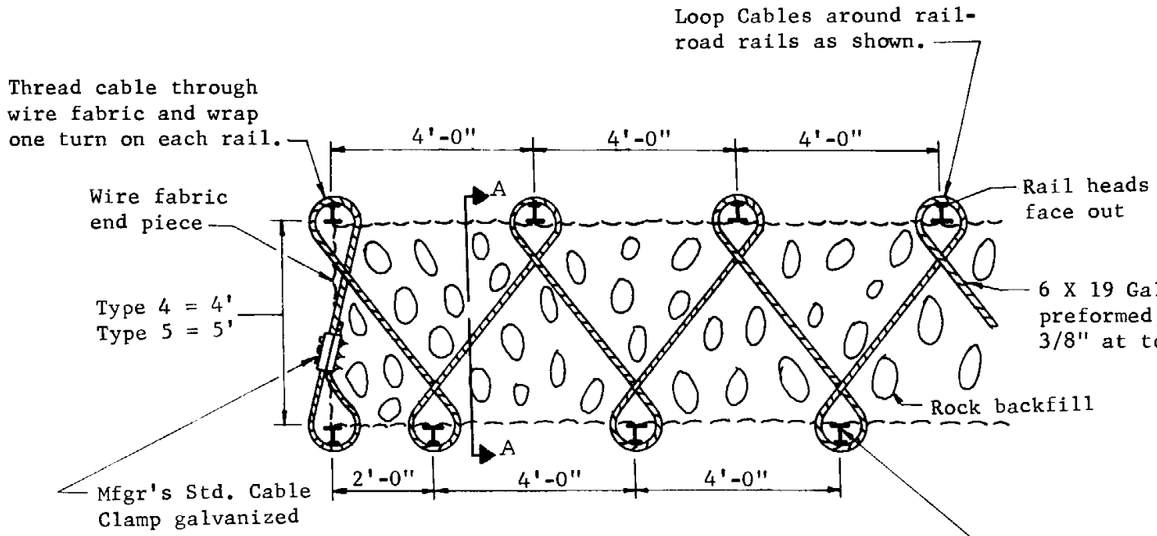

PLAN

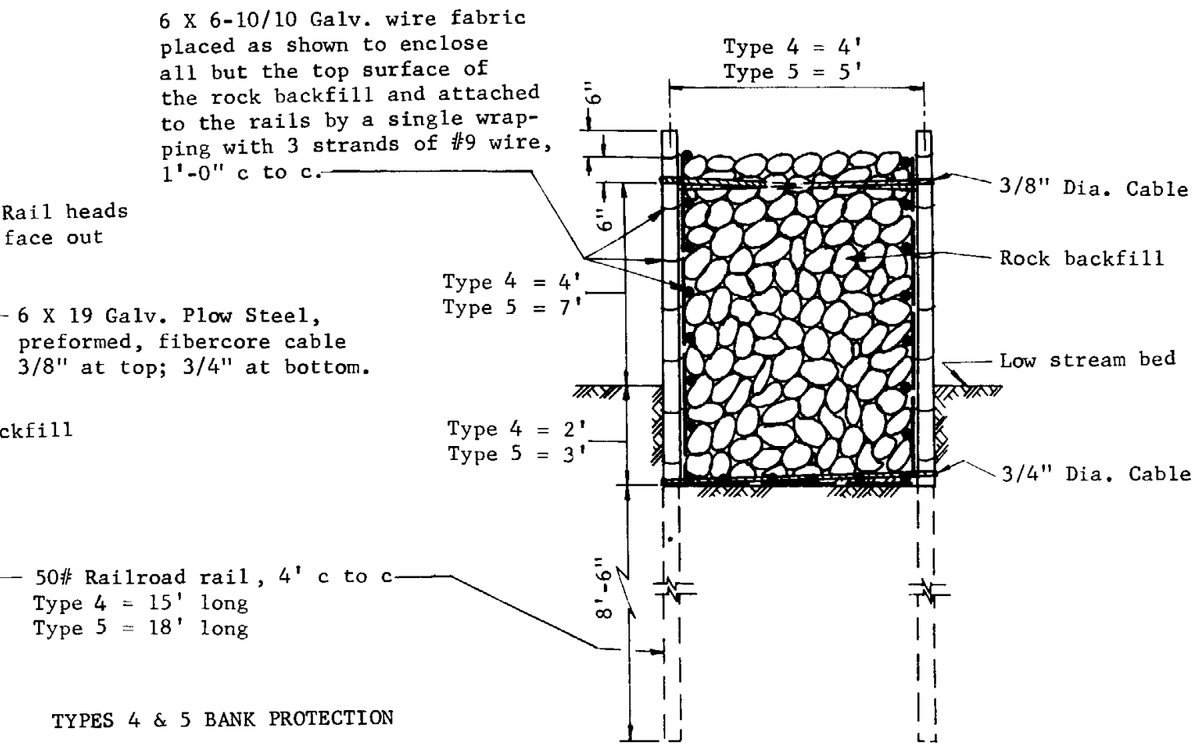

TYPES 4 & 5 BANK PROTECTION

SECTION A-A

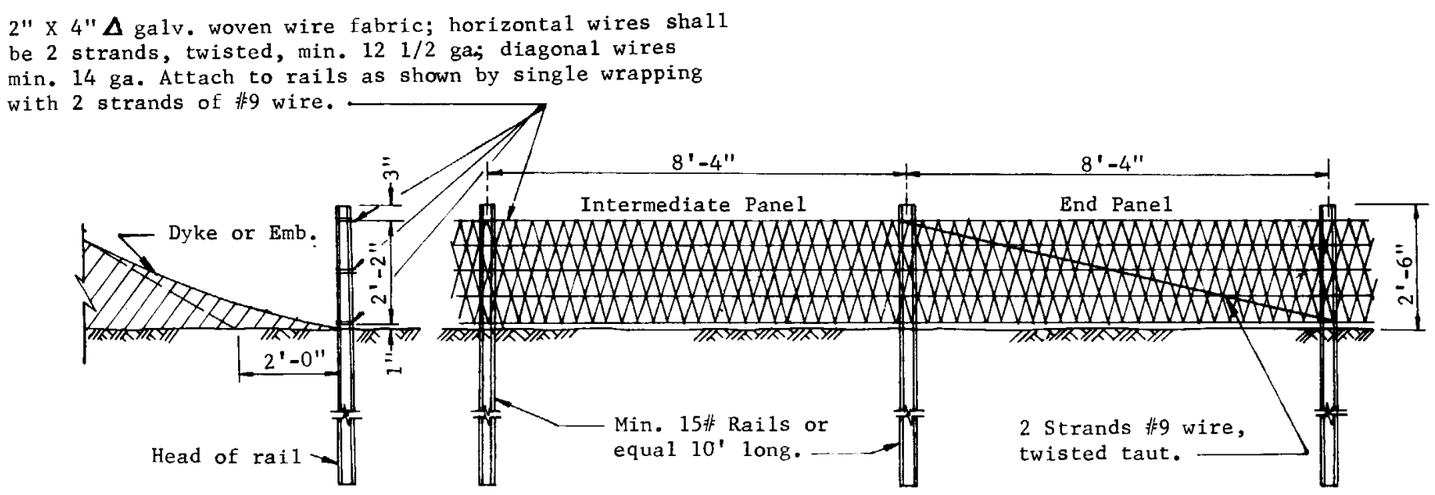

TYPE 6 BANK PROTECTION

GENERAL NOTES
Rock for backfill shall not pass a 6" square opening.

ARIZONA HIGHWAY DEPARTMENT PLANS DIVISION			Rev
BANK PROTECTION RAIL AND WIRE TYPES 4, 5, & 6			
Drawn	H.A.K. 6-35	Drawing No.	
Traced	S.L.T. 6-67		
Checked	J.P.O. JPO 5-68	C-17.02	
Approved Engr. Plans	G Heidecker 5-68		

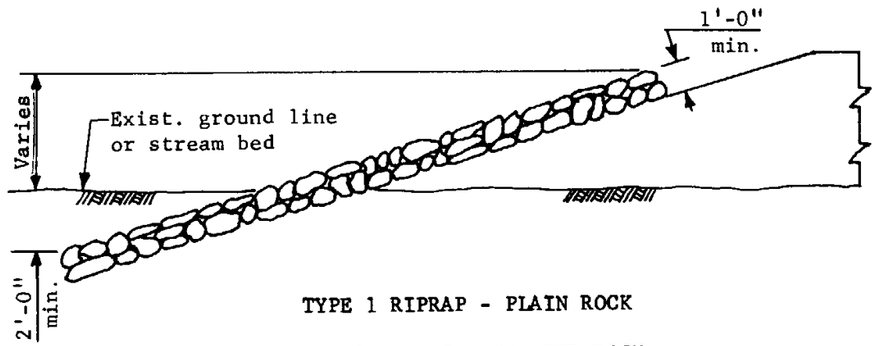

TYPE 1 RIPRAP - PLAIN ROCK

TYPE 2 RIPRAP - GROUTED ROCK

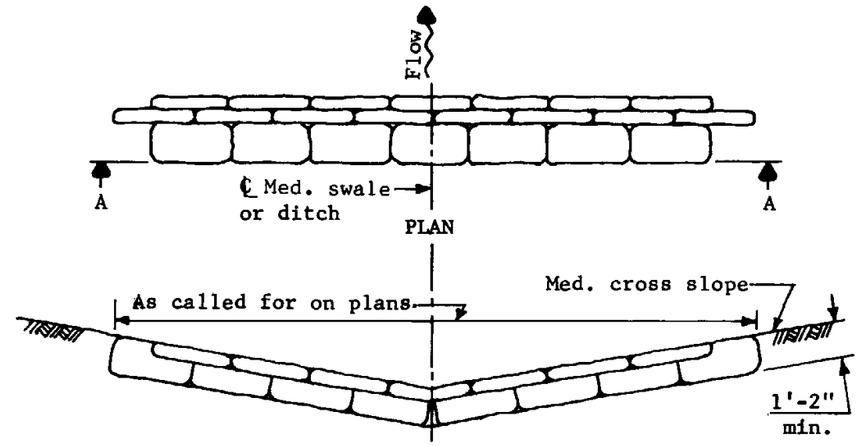

ELEVATION A-A

TYPE 4 RIPRAP - SACKED CONCRETE EROSION CHECK

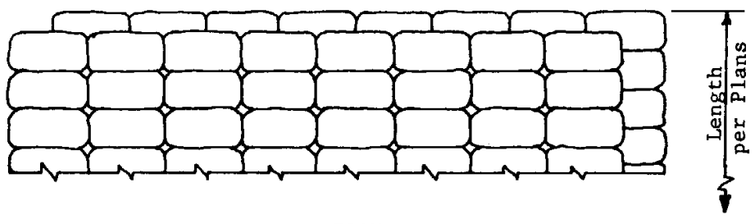

PLAN

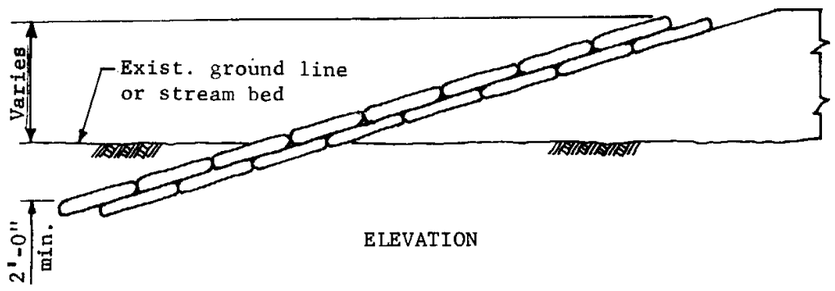

ELEVATION

TYPE 3 RIPRAP - SACKED CONCRETE

GENERAL NOTES
Grout for riprap may be pneumatically placed mortar.

ARIZONA HIGHWAY DEPARTMENT PLANS DIVISION			Rev
RIPRAP			
Drawn	D.G. 5-68	Drawing No.	
Traced	D.G. 5-68		
Checked	J.P.O. 5-68	C-17.03	
Approved Engr. Plans	G.H. Heidrich 5-68		

HALF PLAN

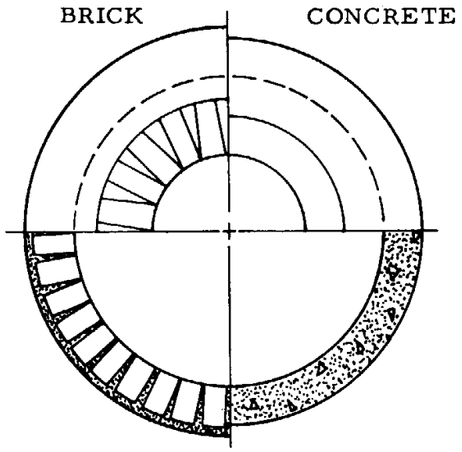

SECTION A-A

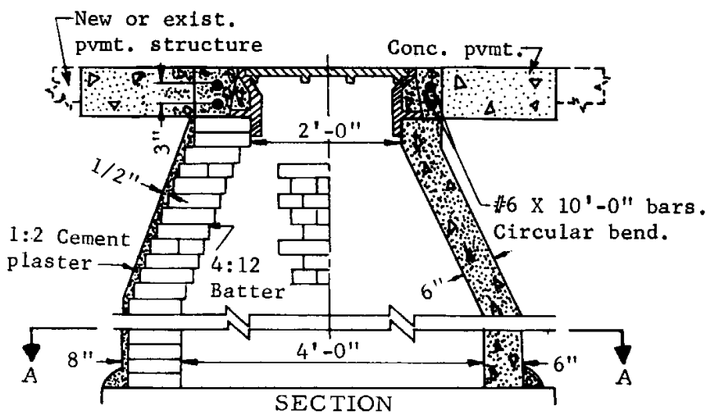

SECTION

BRICK
MANHOLE NO. 1

CONCRETE
MANHOLE NO. 2

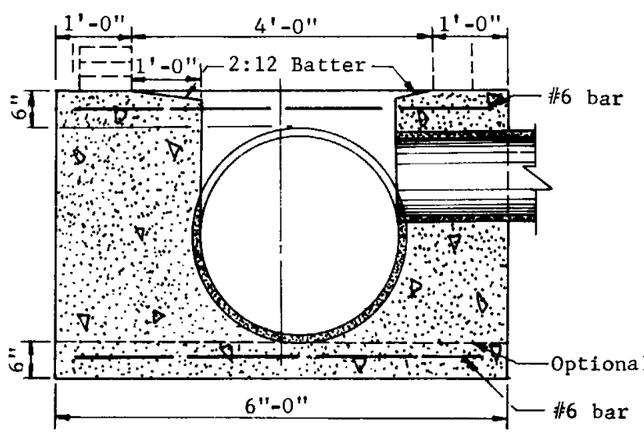

SECTION
STANDARD BASE STRUCTURE
FOR PIPES 6" TO 36" I.D.

HALF PLAN
PIPES 36" I. D. & SMALLER

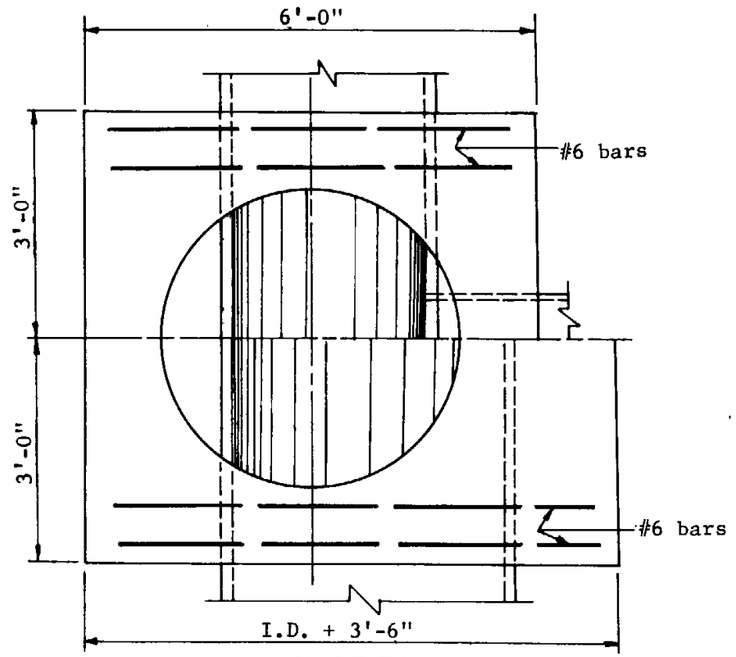

HALF PLAN
PIPES OVER 36" I. D.

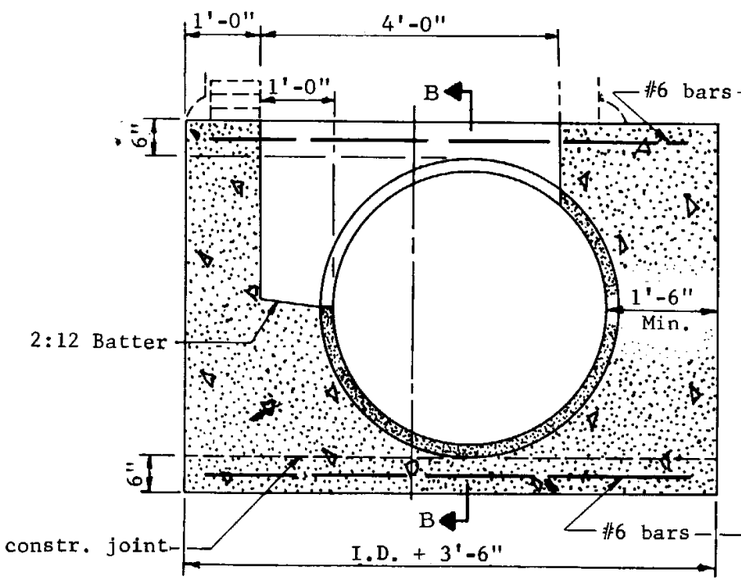

SECTION
STANDARD BASE STRUCTURE
FOR PIPES OVER 36" I. D.

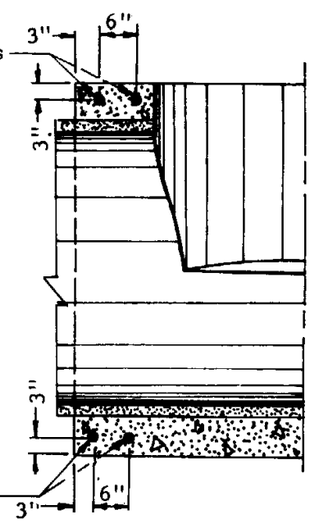

PART SECTION B-B

GENERAL NOTES

All concrete shall be Class A.

Every fifth course of bricks shall be laid as stretchers.

Manhole frame and cover, Std. C-18.02, is shown. Other types may be substituted if noted on Plans.

For manhole cut replacement in bituminous or concrete pavement, see Std. C-7.03.

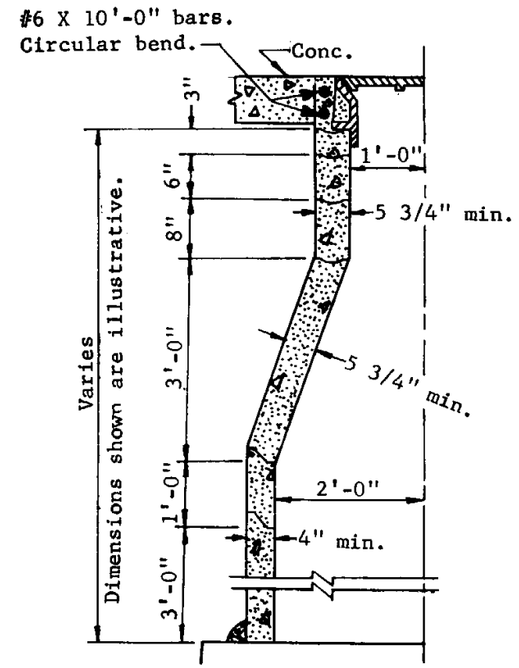

HALF SECTION
MANHOLE NO. 3
PRECAST REINFORCED CONCRETE

ARIZONA HIGHWAY DEPARTMENT
PLANS DIVISION

Rev

MANHOLE DETAILS

Drawn	R.E.W. - 3-58	Drawing No.
Traced	S.L.T. - 5-67	C-18.01
Checked	J.P.O. JPO 5-68	
Approved Engr. Plans	D Heidecker 5-68	

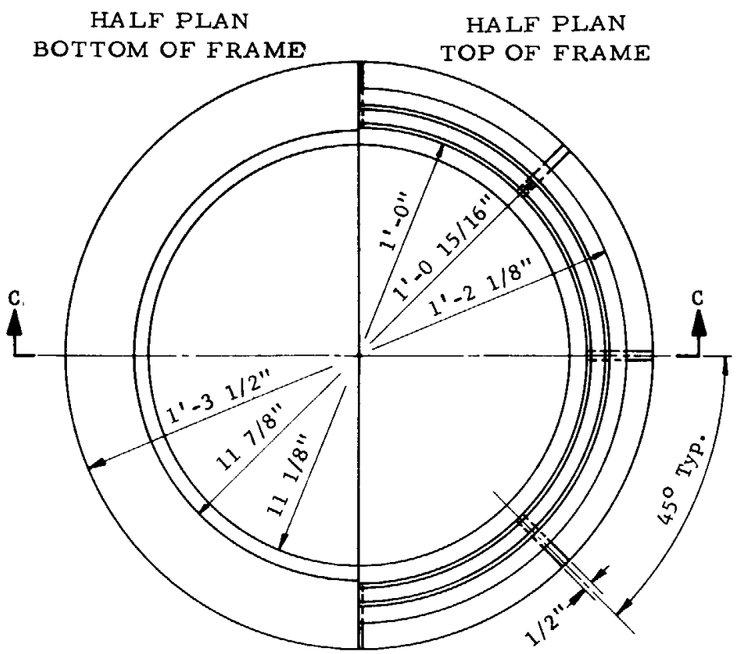

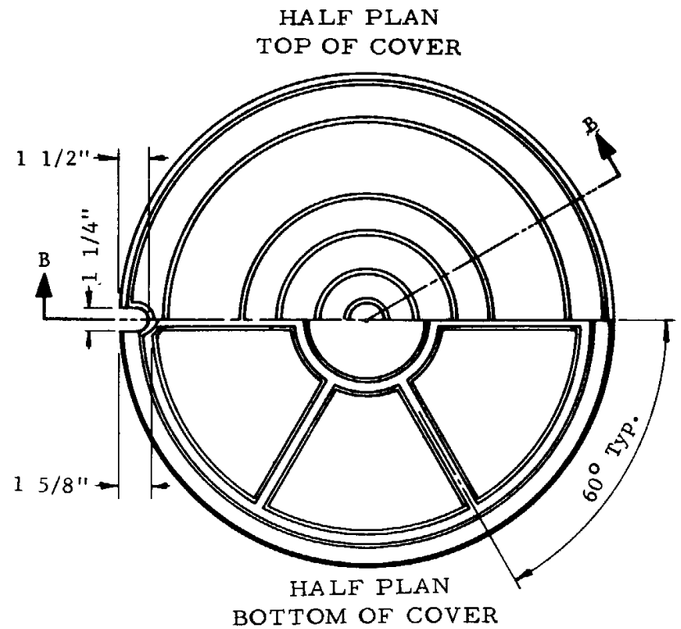

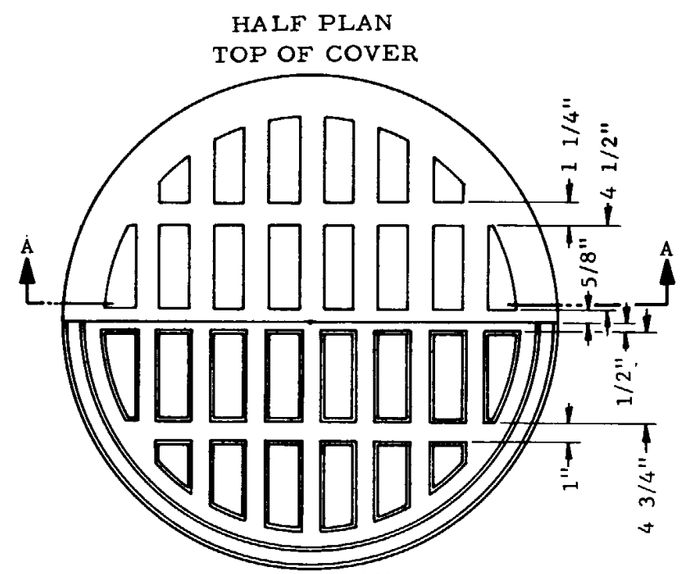

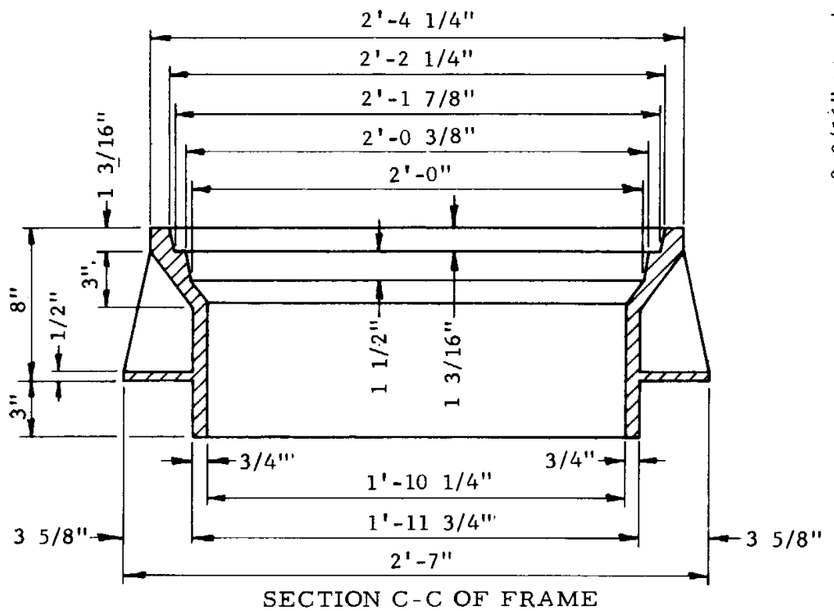

SECTION C-C OF FRAME
Approx. weight 260 lbs.

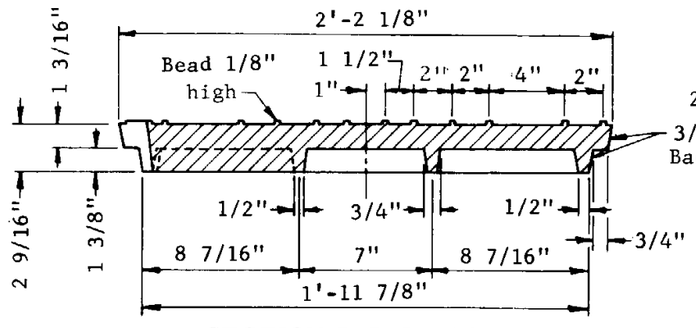

SECTION B-B OF COVER

TYPE A COVER
Approx. weight 190 lbs.

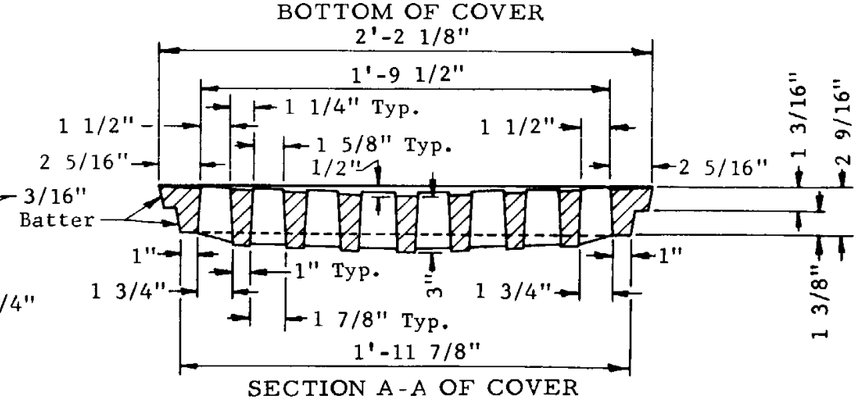

SECTION A-A OF COVER

TYPE B COVER
Approx. weight 280 lbs.

GENERAL NOTES

Type C cover shall be the same as Type A except that the cover shall be vented with at least six one inch holes, equally spaced in a circle 8 1/2" from the center of the cover.

Type A cover shall be used unless otherwise specified.

The bearing faces shall be machined so that the cover will have a uniform bearing in any position in the frame.

ARIZONA HIGHWAY DEPARTMENT PLANS DIVISION			Rev
MANHOLE-CAST IRON FRAME & COVER DETAILS			
Drawn	O.K. 10-35	Drawing No.	
Traced	R.A.F. 6-67	C-18.02	
Checked	J.P.O. JPO 5-68		
Approved Engr. Plans	G Weidecker 5-68		

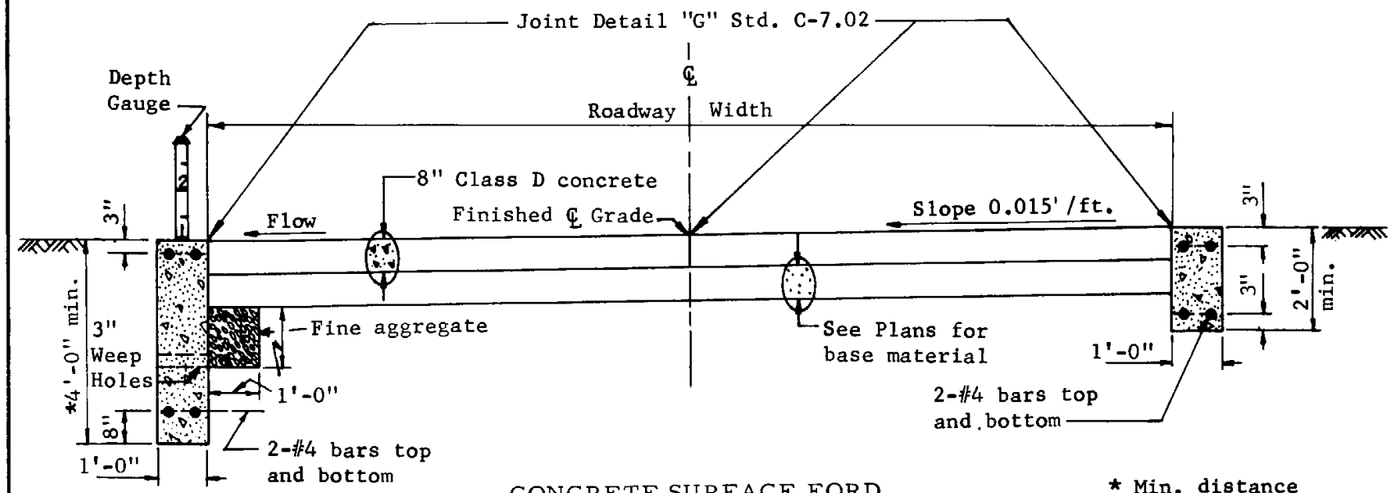

CONCRETE SURFACE FORD
CONCRETE WALLS

* Min. distance below stream bed

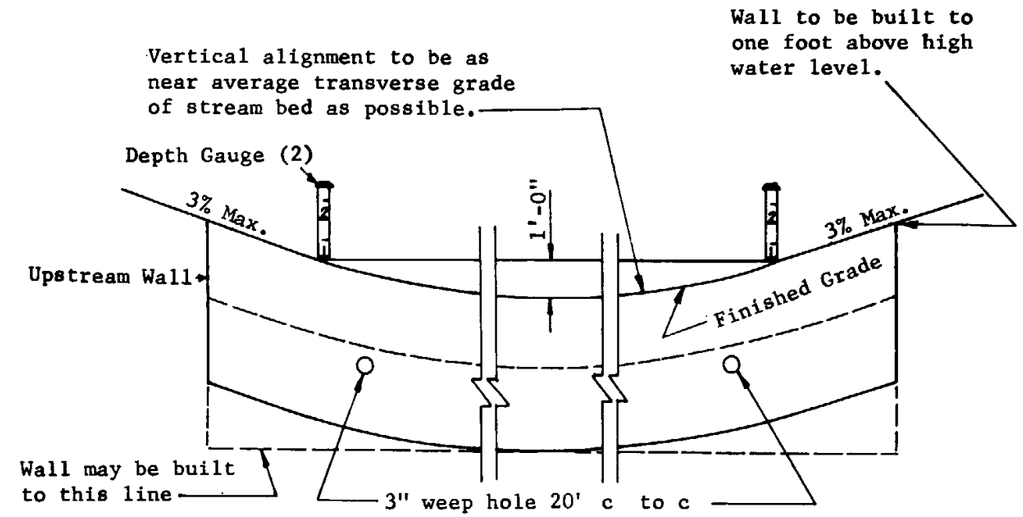

ELEVATION LOOKING UPSTREAM

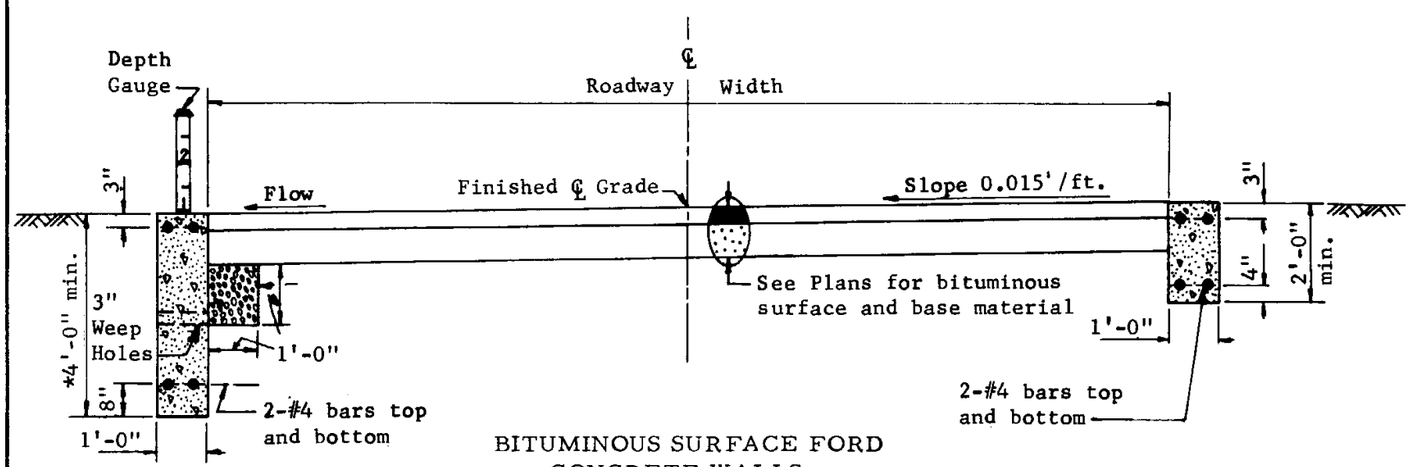

BITUMINOUS SURFACE FORD
CONCRETE WALLS

* Min. distance below stream bed

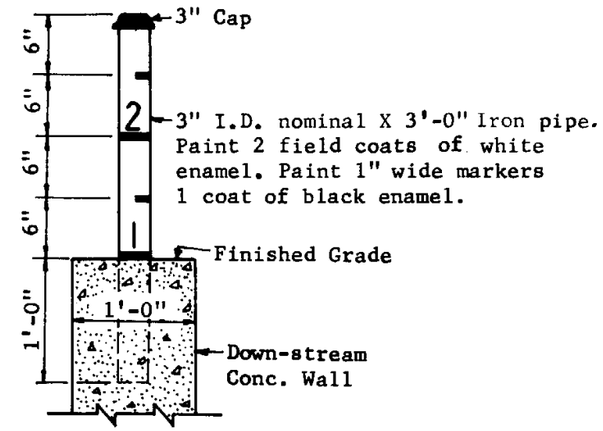

DEPTH GAUGE

GENERAL NOTES

Ford walls to be Class D Concrete.

ARIZONA HIGHWAY DEPARTMENT
PLANS DIVISION

FORD CONCRETE WALLS

Drawn	C.B.B. - 7-45	Drawing No.
Traced	S.L.T. - 5-67	C-19.01
Checked	J.P.O. JPO 5-68	
Approved Engr. Plans	G Weidner 5-68	

Rev

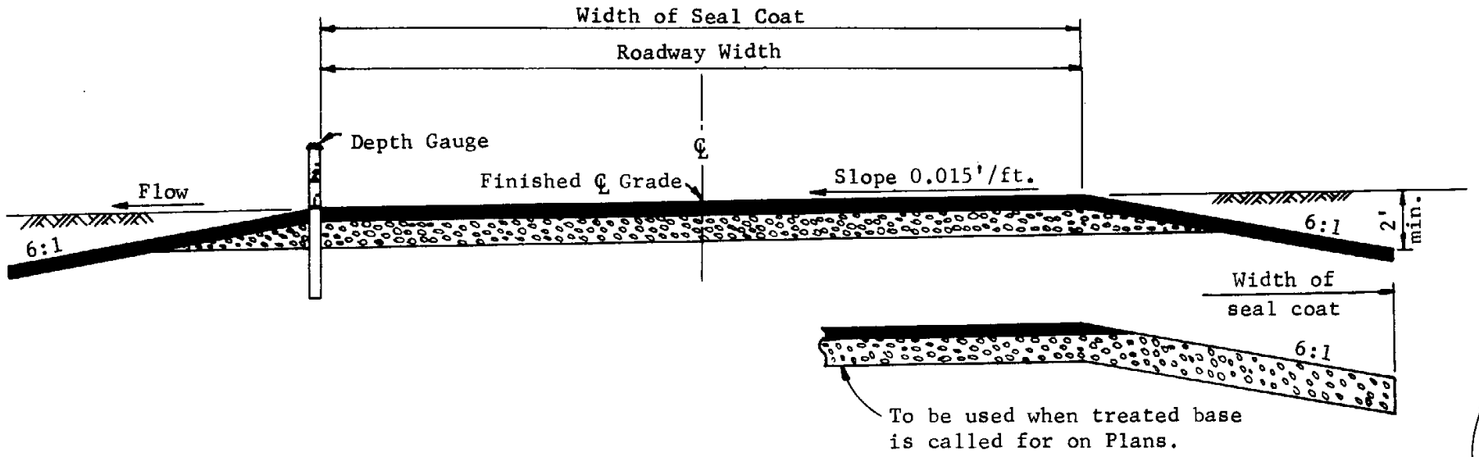

TYPE 1
BITUMINOUS SURFACE FORD

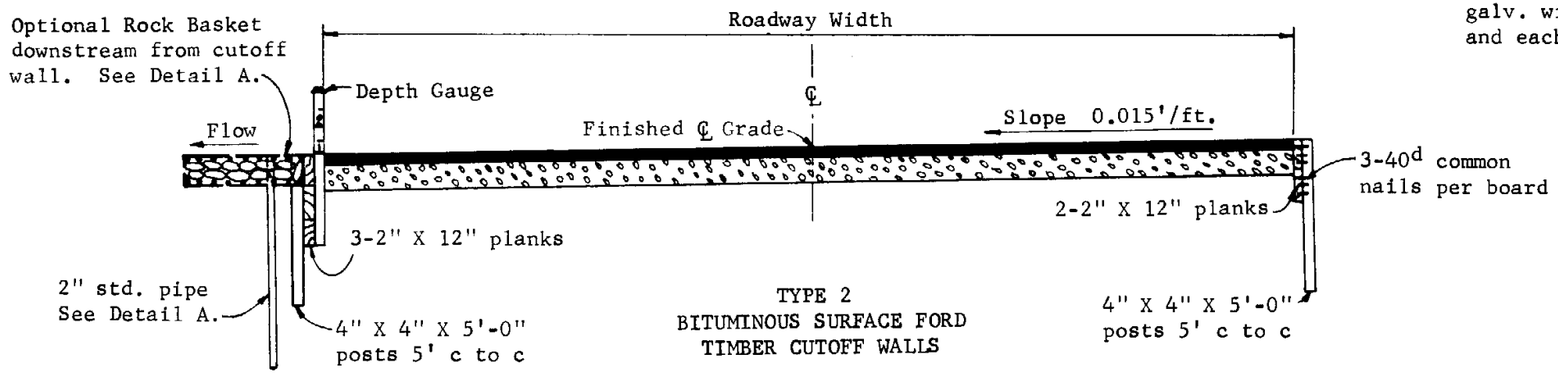

TYPE 2
BITUMINOUS SURFACE FORD
TIMBER CUTOFF WALLS

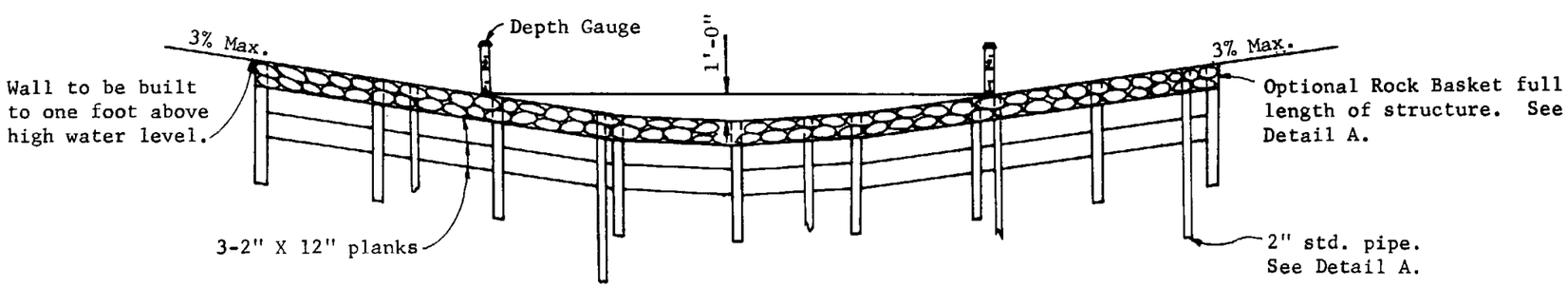

ELEVATION - TYPE 2

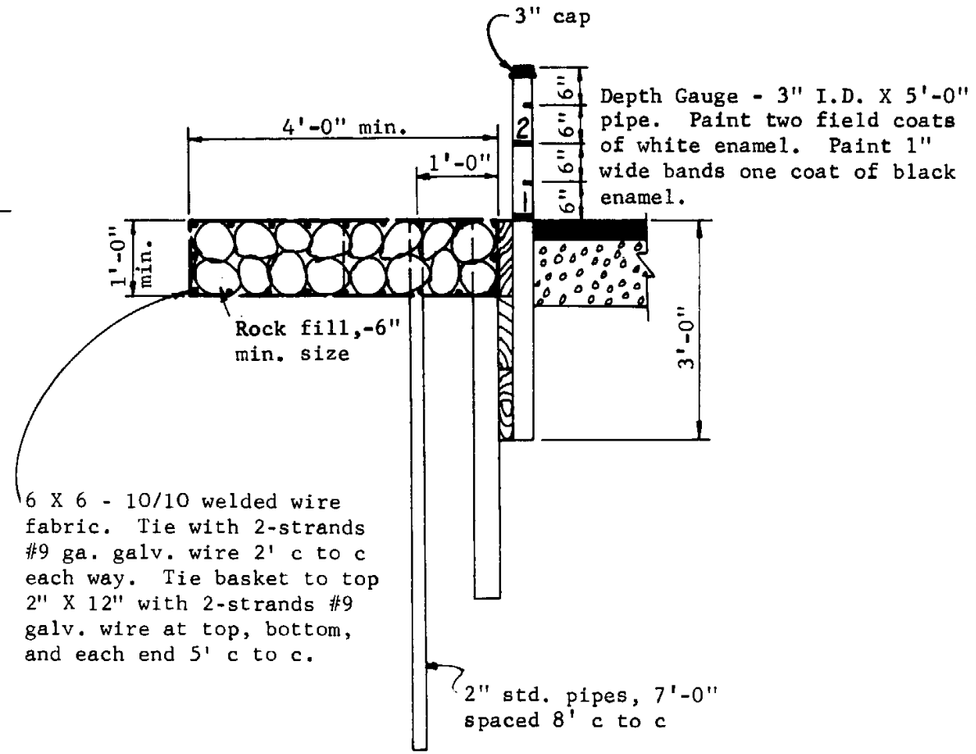

DETAIL A

GENERAL NOTES

All timber shall be rough, pressure treated and unpainted.

Rock basket, full length of structure shall be indluded only when called for on Plans.

See Plans for bituminous surface and base material details.

Galvanize pipes in accordance with ASTM A123.

ARIZONA HIGHWAY DEPARTMENT PLANS DIVISION			Rev
FORDS			
Drawn	C.B.B. 7-45	Drawing No.	
Traced	S.L.T. 5-67	C-19.02	
Checked	J.P.O. JPO 5-68		
Approved Engr. Plans	G Weidenbach 5-68		

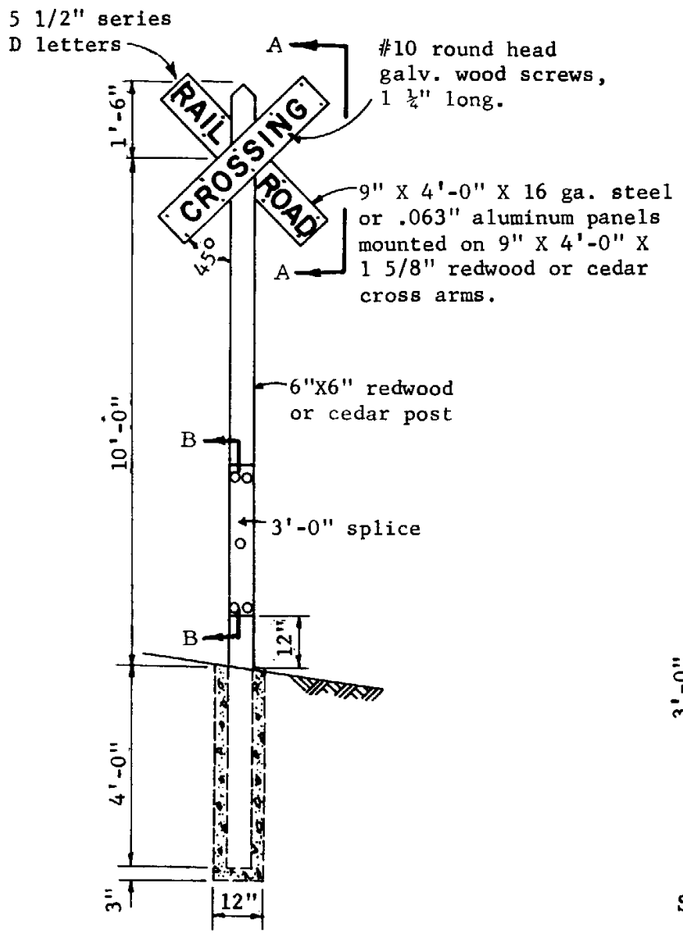

RAILROAD CROSSING SIGN

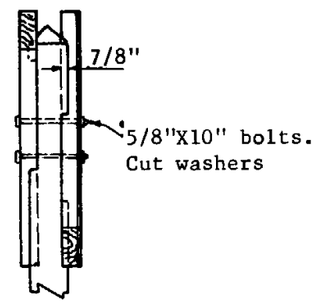

SECTION A-A

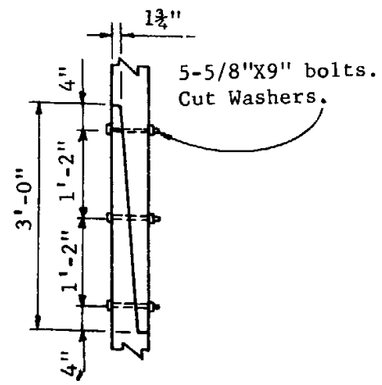

SECTION B-B

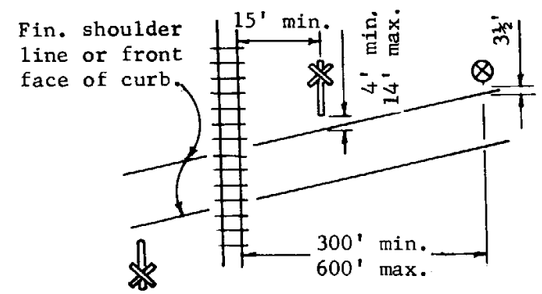

LOCATION PLAN

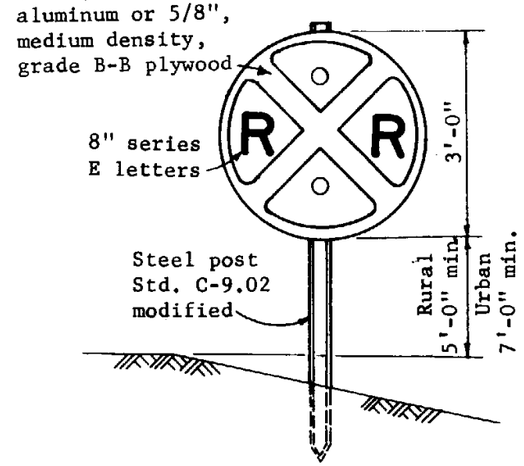

RAILROAD ADVANCE
WARNING SIGN

GENERAL NOTES

All wood shall be redwood or cedar, S4S and untreated.

When a single railroad crossing sign is used for a crossing, both sides of cross arms shall carry sheet steel or aluminum message panels. When two railroad crossing signs are used for a crossing, lettered message panels shall be mounted only on the side of cross arms facing traffic.

Railroad Crossing Sign message panel background shall be silver-white flat top reflective sheeting with black, opaque letters.

Advance Warning Sign traffic face background shall be highway yellow flat top reflective sheeting with black, opaque letters, border and symbol.

All wood and metal surfaces, except those covered with reflective sheeting shall be primed and finished with two coats of No. 11 white enamel.

Reflective sheeting shall be applied in accordance with the manufacturer's specifications.

ARIZONA HIGHWAY DEPARTMENT
PLANS DIVISION

Rev

RAILROAD CROSSING SIGNS

Drawn	D.G. 12-66	Drawing No.
Traced	S.L.T. 3-67	C-20.01
Checked	J.P.O. JPO 5-68	
Approved Engr. Plans	G Weidecker 5-68	

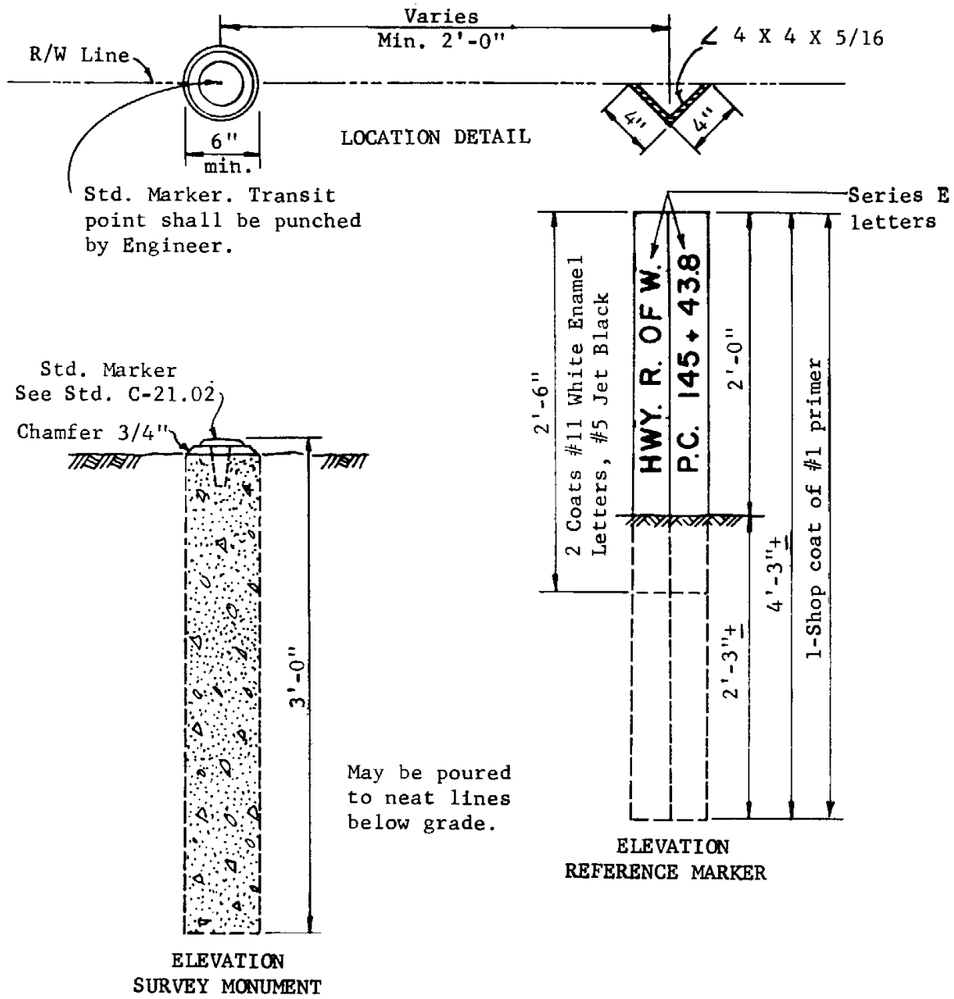

RIGHT OF WAY MARKER

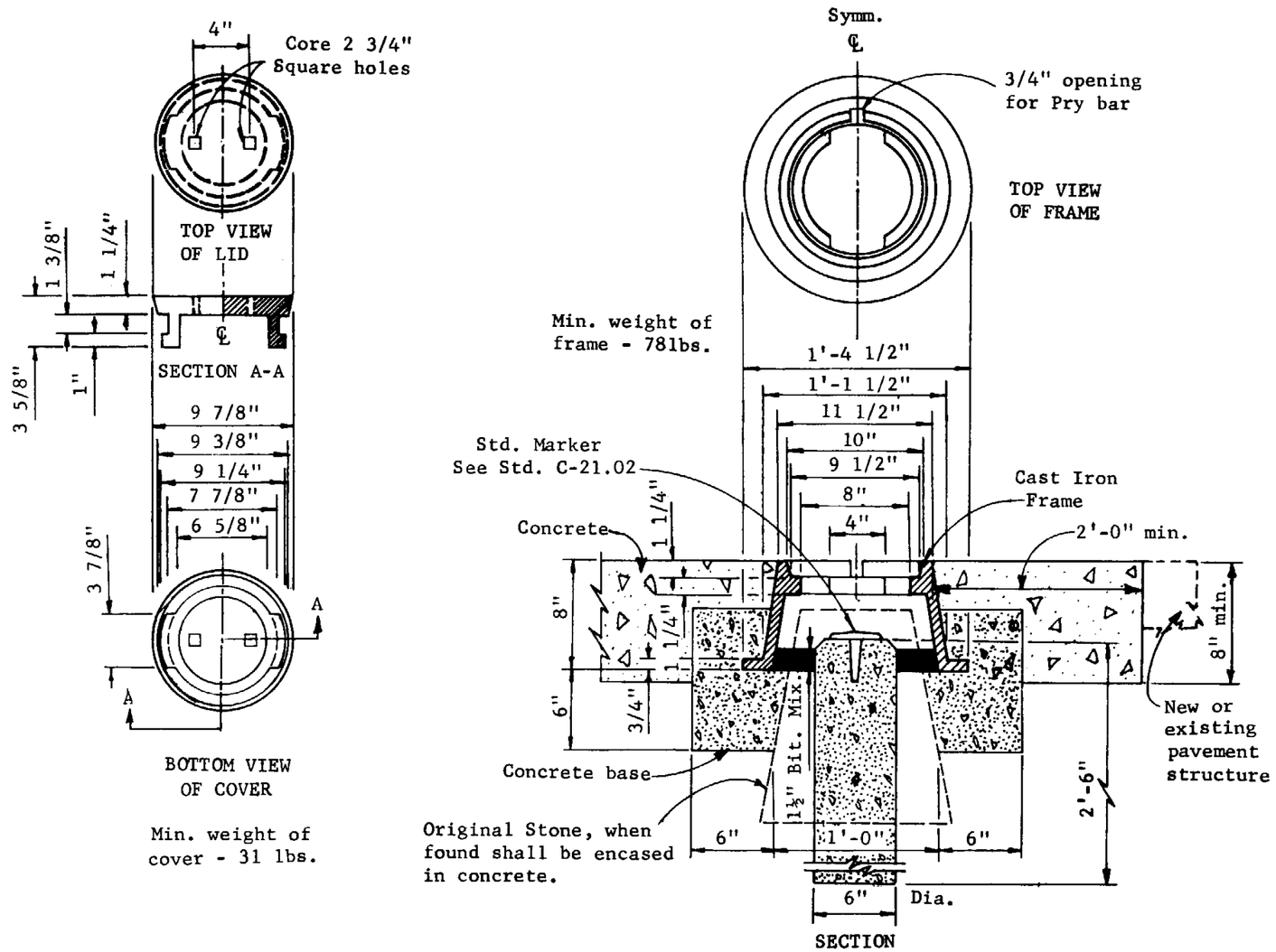

SURVEY MONUMENT, FRAME AND COVER

GENERAL NOTES

A Survey Monument, Frame and Cover, complete and in place, shall be considered as a unit. In bituminous pavement, frame and cover shall be set after A. C. is placed.

A Right of Way Marker, consisting of Survey Monument and Reference Marker, complete and in place, shall be considered as a unit. Right of Way Markers shall be placed as shown on Plans or as directed by the Engineer.

All concrete shall be Class A.

ARIZONA HIGHWAY DEPARTMENT PLANS DIVISION			Rev
SURVEY MONUMENT, FRAME AND COVER RIGHT OF WAY MARKER			
Drawn	11-45	Drawing No.	
Traced	S.L.T. 3-67	C-21.01	
Checked	J.P.O. JPO 5-68		
Approved Engr. Plans	G Heidecker 5-68		

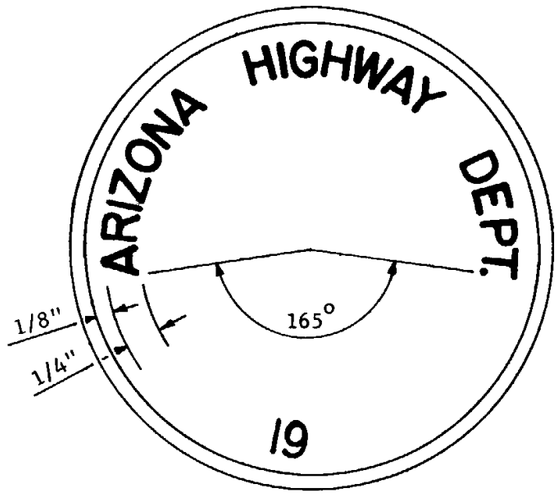

PLAN

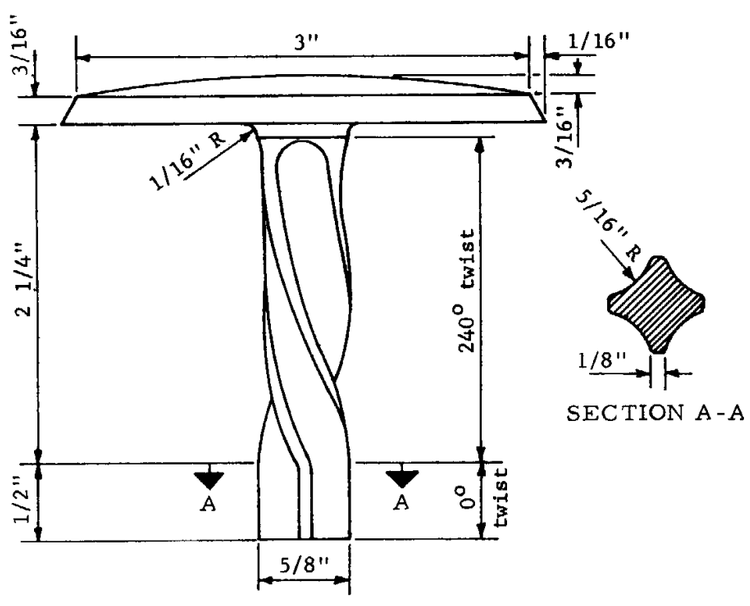

SECTION A-A

ELEVATION

STANDARD MARKER

FOR USE AS BENCH, SURVEY MONUMENT AND R/W MARKERS

GENERAL NOTES

Standard Marker shall be made of brass or bronze.

Standard Marker shall be furnished by the State.

Bench marks will be established, by the Engineer, on headwalls, bridge curbs or other permanent structures.

ARIZONA HIGHWAY DEPARTMENT PLANS DIVISION			Rev
STANDARD MARKER			
Drawn	D.G. 2-68	Drawing No.	
Traced	D.G. 2-68	C-21.02	
Checked	J.P.O. JPO 5-68		
Approved Engr. Plans	R.Weidecker 5-68		

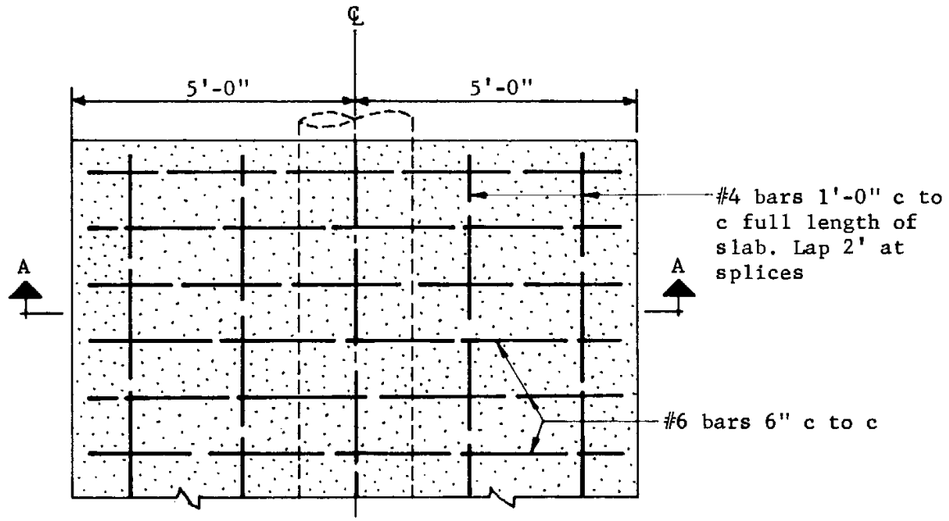

PLAN

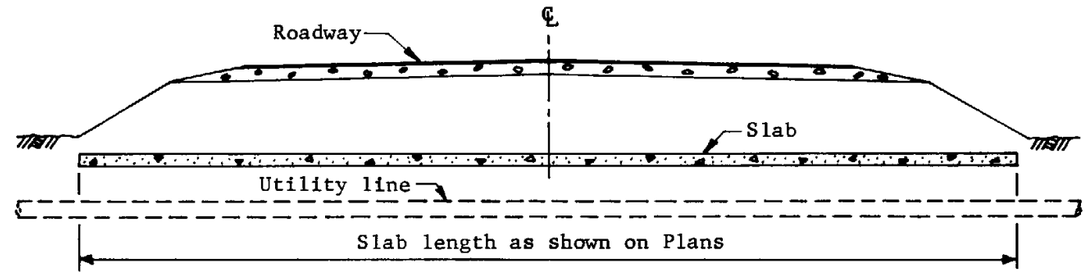

CROSS SECTION

FOR SINGLE INSTALLATION

Quantities per ft. of slab length	
Concrete	Reinforcing Steel
0.31 C.Y.	35.22 lbs.

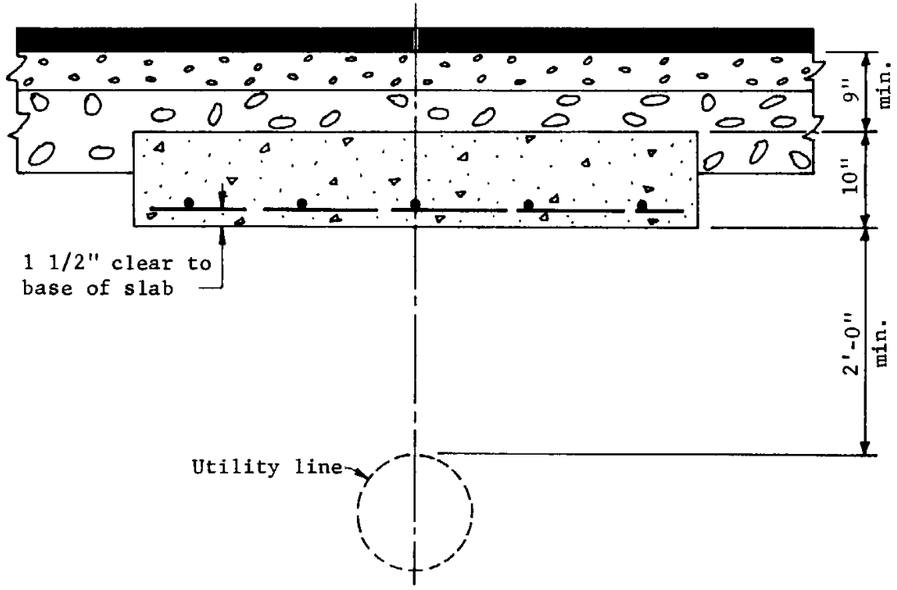

SECTION A-A

GENERAL NOTES
Concrete shall be Class A.

ARIZONA HIGHWAY DEPARTMENT
PLANS DIVISION

SLAB OVER UTILITY LINE

Drawn	L.O.M. 5-65	Drawing No.
Traced	D.G. 3-67	C-22.01
Checked	J.P.O. JPO 5-68	
Approved Engr. Plans	H Heidecke 5-68	

Rev

INDEX

C-13.11	Backfill,Special Placement,Culverts and Pipe Lines
C-17.01	Bank Protection, Rail and Wire
C-17.02	" " " " " "
C-17.03	Bank Protection, Riprap
C-10.08	Barrier, Concrete, Median
C-10.09	Barrier, Concrete, Median, Transition Details
C-12.05	Barrier Fence, Cable Only
C-10.11	Barrier Fence, Chain Link and Cable
C-12.05	Barrier Post
C-13.11	Box Culvert, Struct. Excav. Payment Limits
C-15.08	Catch Basin, Construction Drain
C-15.08	Catch Basin, Depressed Apron, Off Roadway
C-15.08	Catch Basin, Depressed Apron, P.C.C.,Gutter Location
C-15.06	Catch Basin, Grate and Frame, Longitudinal Bars
C-15.07	Catch Basin, Grate and Frame, Transverse Bars
C-15.09	Catch Basin, Median
C-15.10	Catch Basin, Median Dyke and Inlet
C-15.01	Catch Basin-Type 1, Combination
C-15.02	Catch Basin-Type 2, Combination, Adjustable Curb
C-15.03	Catch Basin-Type 3, Curb Opening Only
C-15.04	Catch Basin-Type 4, Grate Opening Only
C-15.05	Catch Basin-Type 5, Combination Sweeper
C-11.01	Cattle Guard
C-11.04	Cattle Guard, Drainage
C-11.03	Cattle Guard, Railroad
C-11.02	Cattle Guard, Ranch or Sideroad
C-13.05	C.M.P. and Pipe Arch End Section
C-13.10	C.M.P. and Pipe Arch Invert Pavement
C-13.08	C.M.P. Arch, Fill Heights
C-13.09	C.M.P. Arch, Fill Height Design Data
C- 4.02	C.M.P. Downdrain
C- 4.04	C.M.P. Downdrain Length Table
C-13.06	C.M.P., Fill Heights
C-13.07	C.M.P., Fill Height Design Data
C-13.01	C.M.P., Perforated, Installation
C- 2.04	Crown, Parabolic
C-13.11	Culvert, Box, Struct. Excav. Payment Limits
C-13.05	Culvert, C.M.P. and Pipe Arch End Section
C-13.10	Culvert, C.M.P. and Pipe Arch Invert Pavement
C-13.10	Culvert, C.M.P. Arch, Fill Heights
C-13.11	Culvert, C.M.P. Arch, Fill Height Design Data
C-13.06	Culvert, C.M.P., Fill Heights
C-13.09	Culvert, C.M.P., Fill Height Design Data
C-13.01	Culvert, Pipe, Installation
C-13.11	Culvert, Pipe, Struct. Excav. Payment Limits
C-13.04	Culvert, R.C.P., End Section
C-13.03	Culvert, R.C.P., Fill Heights
C-13.02	Culvert, R.C.P., Placement
C- 5.01	Curb, Concrete
C- 5.01	Curb, Depressed, Driveway Detail
C- 4.01	Curb, Embankment, Concrete
C- 5.02	Curb, Measurement
C- 9.02	Delineators, Face Plate Details
C- 9.06	Delineators, Interchange Spacing
C- 9.05	Delineators, Main Line Spacing
C- 9.03	Delineators, Placement
C- 9.04	Delineators, Post and Mounting Details
C- 9.08	Delineators, Snow Marker
C- 9.07	Delineators, Spacing Table
C- 9.01	Delineators, Usage
C- 6.02	Detour, Entrance Design Table
C- 3.01	Ditches
C- 2.01	Ditches, Paved, Class A-A Roadway
C- 2.02	" " " , Class A & B Roadways
C- 2.03	" " " , Class C & D Roadways
C- 4.02	Downdrain, C.M.P.
C- 4.04	Downdrain, C.M.P., Length Table
C- 5.01	Driveway, Details
C- 5.01	Driveway Layout
C- 3.01	Dykes
C- 4.01	Embankment Curb, Concrete
C-13.02	Encasement, Culvert
C-13.05	End Sections, C.M.P. and Pipe Arch
C-13.04	End Sections, Reinf. Concrete Pipe
C-12.05	Fence, Barrier, Cable Only
C-10.11	Fence, Barrier, Chain Link and Cable
C-12.03	Fence, Chain Link
C-12.02	Fence, Culvert Wing
C-12.04	Fence, Industrial, Chain Link, Pipe Constr.
C-12.04	Fence, Industrial, Chain Link, Rolled Shape Constr.
C-12.02	Fence, Game
C-12.01	Fence, Line
C-12.02	Fence, Stock
C-19.02	Fords
C-19.01	Fords, Concrete Cutoff Walls
C-12.04	Gate, Driveway, Chain Link
C-16.03	Gate, Irrigation
C-12.01	Gate, Line Fence, Barbed Wire
C-12.01	Gate, Line Fence, Rigid
C-12.02	Gate, Removal Detail
C-12.03	Gate, Walk, Chain Link
C-10.10	Glare Screen, Median
C- 5.02	Grades, Street Intersection
C-10.03	Guard Rail, Approach End Treatment
C-10.04	Guard Rail, Bridge Approach Alignment
C-10.05	Guard Rail, Flare to Median
C-10.02	Guard Rail, Installation on Structures
C-10.02	Guard Rail, Median Barrier Detail
C-10.02	Guard Rail, Pier Attachment Detail
C-10.01	Guard Rail, Single Face Detail
C-10.02	Guard Rail, Special Terminal Section Detail
C-10.06	Guard Rail, Typical Installations
C- 5.01	Gutter, Concrete
C- 5.02	Gutter, Measurement
C- 2.01	Gutter, Paved Cut Ditch, Class A-A Roadway
C- 2.02	" " " " , Class A & B Roadways
C- 2.03	" " " " , Class C & D Roadways
C- 5.01	Gutter, Valley
C-14.03	Headwall, Drop Inlet
C-16.01	Headwall, Irrigation
C-14.01	Headwall, Straight, "L" and "U" Types
C-14.02	Headwall, Wing Type
C- 4.01	Inlet, Concrete Spillway
C- 5.02	Intersection Grades
C-13.10	Invert Pavement, C.M.P. and Pipe Arch
C-16.03	Irrigation Gates
C-16.03	Irrigation Valve
C- 7.01	Joint, Bridge Approach Slab
C- 7.02	Joint, P.C.C. Pavement, Longitudinal
C- 7.01	Joint, P.C.C. Pavement, Transverse
C-13.02	Joint, R.C.P.
C-18.01	Manhole, Details
C-18.02	Manhole, Frame and Cover Details
C-21.01	Marker, Right of Way
C-21.02	Marker, Standard
C-10.08	Median Barrier, Concrete
C-21.01	Monument, Survey
C- 7.03	Pavement, Cut Replacement
C-13.10	Pavement, Invert, C.M.P. and Pipe Arch
C- 8.02	Pavement, Nose, Ramp Terminal
C-13.11	Payment Limits, Struct. Excav.
C-13.01	Perforated C.M.P. Installation
C-13.01	Pipe Culvert, Installation
C-13.11	Pipe Line, Struct. Excav. Payment Limits
C-12.05	Post, Barrier
C-20.01	Railroad Crossings, Signs
C- 8.02	Ramp, Entrance, Typical Terminal Detail
C- 8.01	Ramp, Exit, Typical Terminal Detail
C-13.04	Reinf. Conc. Pipe, End Section
C-13.03	Reinf. Conc. Pipe, Fill Heights
C-13.02	Reinf. Conc. Pipe, Placement
C-21.01	Right of Way Marker
C-17.03	Riprap
C- 5.01	Sidewalk, Concrete
C-20.01	Signs, Railroad Crossing
C- 2.02	Slopes, Class A and B Roadways
C- 2.03	Slopes, Class C and D Roadways
C- 2.01	Slopes, Interstate and Class A-A Roadways
C-13.11	Special Backfill,Placement,Culv. and Pipe Line
C- 4.01	Spillway, Concrete
C- 4.03	Spillway, Concrete Length Table
C- 4.02	Spillway, C.M.P.
C- 4.04	Spillway, C.M.P. Length Table
C-16.02	Standpipe, Irrigation
C-13.11	Struct. Excav. Payment Limits
C-21.01	Survey Monument
C- 1.01	Symbols, Plans
C- 6.01	Turnouts
C-22.01	Utility Line,Underground,Conc. Slab Protection
C- 5.01	Valley Gutter