F.H.W.A. REGION	STATE	PROJECT NO.	SHEET NO.	TOTAL SHEETS	AS BUILT
9	ARIZ.				

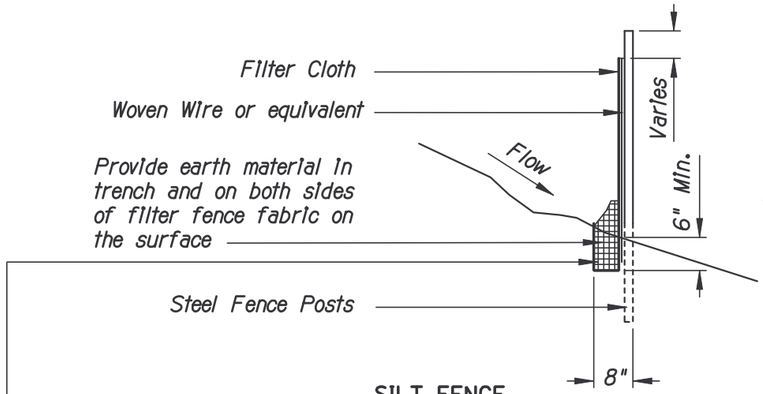

SILT FENCE
SECTION VIEW
(N. T. S., Typ.)

Silt fence filter fabric in the installation trench shall be buried a minimum of twenty inches. The section of the trench shall be a minimum of 6" (deep) X 8" (wide). Filter fabric is to be buried along the side and bottom of the trench and back up to the upstream slope grade. Silt fence filter fabric section shall be a "J" form to prevent under cuts and carry stress from upstream sediment loading.

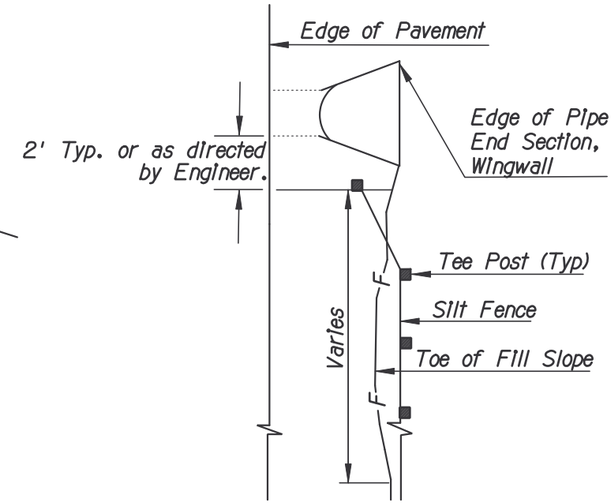

PLAN VIEW
PIPE INLET/OUTLET
SILT FENCE PLACEMENT

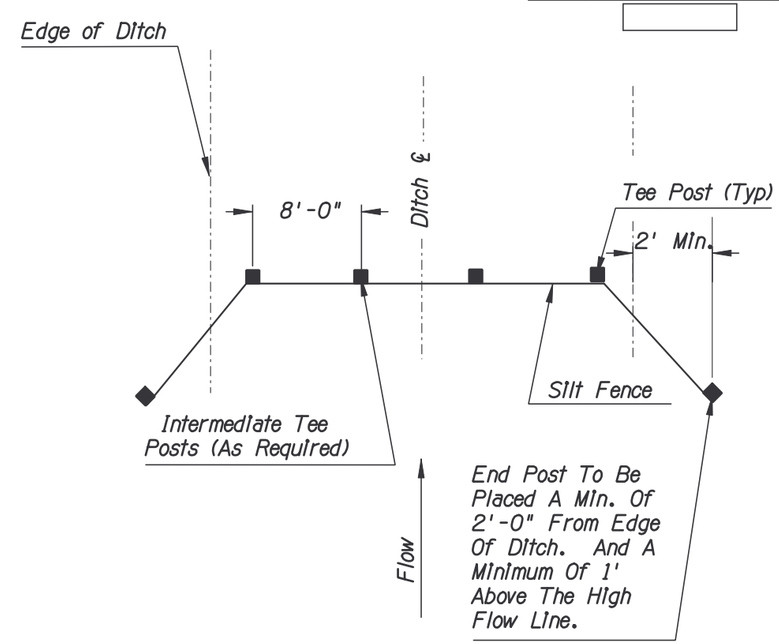

FILTER FABRIC SILT FENCE
DITCH CHECK FOR MINOR FLOW SITUATION
(N. T. S., Typ.)

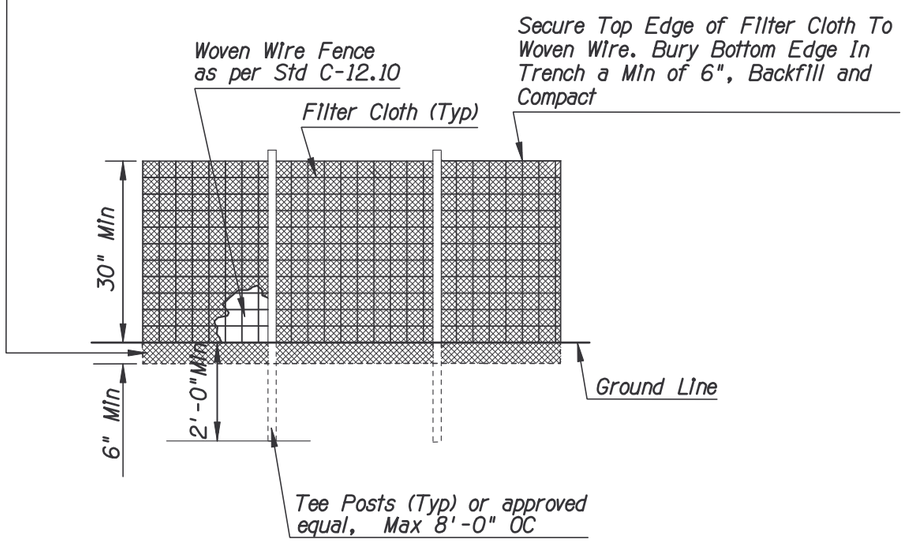

SILT FENCE
ELEVATION VIEW
(N. T. S., Typ.)

GENERAL NOTES:

Silt fences may be required as directed by the Engineer. Silt fences are for temporary erosion control in terms of sheet flow and minor concentrated flow areas only; they shall be selected, installed, and maintained with manufacturer's specifications and good engineering practices. Remove silt fences upon achieving the Final Stabilization Requirements.

Silt fences are to be installed at areas of construction disturbance as required, in the event that precipitation is likely, and according to local forecast.

The contractor shall supply a rain gauge and monitor the amount of rainfall and document the precipitation results within 24 hours of their occurance and submit this information to the Engineer.

Once a silt fence has been installed it is the responsibility of the contractor to properly maintain this device.

Filter cloth shall be a woven polypropylene fabric and shall conform to the following specifications:

Apparent Opening Size - 20-50 US Std. Sieve
Mullen Burst - 200-275 p.s.i.
Trapezoidal Tear - 50-60 lbs.
Grab Elongation - 15-25%
Grab Tensile - 100 lbs. min.
UV Resistance - 70-90 %

Wire mesh fence fabric shall be standard woven wire fence fabric, as specified in Construction Standard C-12.10 .

Posts shall be steel line posts as specified in Construction Standard C-12.10. with a minimum length of 6'-0" .

Plastic filter cloth shall be attached to the top wire and midpoint of the fence fabric every 3'-0" and shall also be attached to the posts at the top, middle, and bottom with wire ties.

Unless otherwise specified, silt fences shall be installed on the same elevation or contour line.

Silt fence ditch check shall not be applied within the banks of living streams or natural washes. They shall not be applied within the flow path of box or pipe culvert inlets and outlets.

DETAIL E6

	NAME	DATE
DESIGN	E LEROY BRADY	2-2006
DESIGN	ZITAO FANG	2-2006
DRAWN	ZITAO FANG	2-2006
CHECKED	E LEROY BRADY	2-2006
TEAM LEADER	E LEROY BRADY	2-2006

ARIZONA DEPARTMENT OF TRANSPORTATION
INTERMODAL TRANSPORTATION DIVISION
ROADSIDE DEVELOPMENT SECTION

EROSION/SEDIMENT CONTROL AND WATER QUALITY PROTECTION DETAILS

ROUTE | MP | LOCATION

SHEET OF

TRACS NO.

___ OF ___

NO.1 DESCRIPTION OF REVISION MADE BY DATE
NO.2 DESCRIPTION OF REVISION MADE BY DATE