Appendix A:

ADOT's PER-2.02 Americans with Disabilities Policy

2.02 PURPOSE

The purpose of this document is to effectuate Arizona Department Transportation (ADOT) American with Disabilities policy under:

(a) Title II of the American with Disabilities Act of 1990 (42.U.S.C. 12131), which prohibits discrimination on the basis of disability by public entities.

(b) Section 504 of the Rehabilitation Act of 1973, as amended (29 U.S.C. 794), which states that no otherwise qualified individual with a disability in the United States shall solely by reason of his or her disability, be excluded from the participation in, be denied the benefits of, or be subjected to discrimination under any program or activity receiving Federal financial assistance.

2.03 AUTHORITY

- Americans with Disabilities Act (ADA) of 1990
- The Americans with Disabilities Act Amendments Act of 2008
- Section 504 of the Rehabilitation Act of 1973
- 42 USC 3, et seq. 12131 through 1216 -- Americans with Disabilities Act (Title II)
- 29 USC 794, et seq. -- Section 504 of the Rehabilitation Act of 1973 (as amended by the Civil Rights Restoration Act of 1987)
- 42 USC 3, et seq.12111 -- Americans with Disabilities Act (Title II)
- 23 CFR 450.220(a) (4) - ADA Requirements to be Certified into Statewide Planning
- 23 CFR 450.316(b) (3) - ADA Requirements for Metropolitan Planning
- 23 CFR 771.105(f) - ADA Requirements for NEPA
- 23 CFR Part 1235 - Uniform System for Parking for Persons with Disabilities
- 23 CFR Part 5632 - Pedestrian & Bicycle Accommodations and Projects
- 28 CFR Part 35 - Nondiscrimination on the Basis of Disability in State and Local Government Services
- 36 CFR Part 1191 - American With Disabilities Act (ADA) Accessibility Guidelines for Building and Facilities; State and Local Government Facilities Architectural Barriers Act (ABA) Accessibility Guidelines

- 49 CFR Part 27 -- Nondiscrimination on the Basis of Disability in Programs or Activities Receiving Federal Financial Assistance
- Public Law 100-259; 102 Stat. 28 -- Civil Rights Restoration Act of 1987
- Public Law 109-59 -- Safe, Accountable, Flexible, Efficient Transportation Equity Act: A Legacy for Users (SAFETEA-LU) of 2005

2.04 AUTHORITY

This policy applies to all of ADOT's employees, and other persons who are part of ADOT's workforce. Additional requirements are outlined in this policy for ADOT managers to resolve complaints and to address contractors and grantees that provide ADOT programs, services or activities.

Title II of the ADA applies to the programs and services of all State and Local governments and their agencies and departments. It applies when programs and services are being provided directly by ADOT or its Divisions or are being provided by grantees, sub-recipients or contractors. ADOT shall ensure that sub-recipients, grantees and contractors understand their obligations under the ADA, inform individuals about their rights under the ADA, and comply with the ADA and this policy.

Section 504 applies to all of the operations of a department of agency of a state or local government that receives federal financial assistance. All of ADOT programs, services, and activities shall comply with Section 504. ADOT sub-recipients, grantees and contractors whose services are funded with federal financial assistance shall also comply with Section 504.

2.05 BACKGROUND

The Americans with Disabilities Policy was first published in the ADOT Administrative Policies and Procedures Manual on October 1, 1992, as PER-2.01. The previous revision was completed for PER-2.01 on January 1, 1995, and expanded the list of requirements for employers and program/service providers. PER-2.02 is being established to conform with Title II of the ADA which prohibits discrimination on the basis of disability in state and local government services.

2.06 POLICY OVERVIEW

This policy provides information on the ADOT's policy on non-discrimination on the basis of disability in its programs, services, and activities under Title II of the American with Disabilities Act of 1990 (ADA) and Section 504 of the Rehabilitation Act of 1973. Because of the nearly identical language and requirements in these two laws, this policy shall treat them the same, and a reference to the ADA shall include a reference to Section 504. This policy does supersede policies or manuals, which pursuant to other federal or state laws provide rights or benefits greater than those required by Title II of the ADA or Section 504. Where multiple laws apply, ADOT shall apply whichever law provides the most rights or benefits. This policy does not address the obligation of ADOT's programs to comply with the ADA in terms and conditions of employment or the hiring process.

2.07 DEFINITIONS

Americans with Disabilities Act (Pub. L. 101–336, 104 Stat. 327, 42 U.S.C. 12101–12213 and 47 U.S.C. 225 and 611) Subject to the provisions of Title II of the ADA, no qualified individual with a disability shall, by reason of such disability, be excluded form participation in or be denied the benefits of the services, programs, or activities of a public entity, or be subjected to discrimination by any such entity.

Americans with Disabilities Act Accessibility Guidelines (ADAAG) **-** Provide scoping and technical specifications for new constructions and alterations undertaken by entities covered by the ADA

ADA Title II, Nondiscrimination on the Basis of State and Local Government Services **-** Protects people with disabilities from discrimination in services, programs or activities of all State and local governments.

ADA/504 Coordinator **–** Employee of the State ADOT who has been designated to coordinate the ADOT's activities and efforts with respect to Title II ADA and Section 504 compliance.

Alteration **-** Modification made to an existing building or facility that goes beyond normal maintenance activities and affects or could affect usability.

Assistive device **-** A device that assists users in accomplishing day-to-day functions.

Auxiliary aids and services includes—

(1) Qualified interpreters, notetakers, transcription services, written materials, telephone handset amplifiers, assistive listening devices, assistive listening systems, telephones compatible with hearing aids, closed caption decoders, open and closed captioning, telecommunications devices for deaf persons (TDD's), videotext displays, or other effective methods of making aurally delivered materials available to individuals with hearing impairments;

(2) Qualified readers, taped texts, audio recordings, Brailed materials, large print materials, or other effective methods of making visually delivered materials available to individuals with visual impairments;

(3) Acquisition or modification of equipment or devices; and

(4) Other similar services and actions.

CFR (Code of Federal Regulations) **-** The Code of Federal Regulations is the codification of the general and permanent rules published in the Federal Register by the executive departments and agencies of the Federal Government.

Changes in level **-** Vertical height transitions between adjacent surfaces or along the surface of a path. Small changes in level are often caused by cracks in the surfacing material. Changes in level may also result when the expansion joints between elements such as curb ramps and gutters are not constructed at

the same time. On trails, ruts caused by weather erosion, tree roots, and rocks protruding from the trail surface are common sources of changes in level.

Complete complaint means a written statement that contains the complainant's name and address and describes the public entity's alleged discriminatory action in sufficient detail to inform the agency of the nature and date of the alleged violation of this part. It shall be signed by the complainant or by someone authorized to do so on his or her behalf. Complaints filed on behalf of classes or third parties shall describe or identify (by name, if possible) the alleged victims of discrimination.

Cross slope - The slope measured perpendicular to the direction of travel.

Curb ramp - A combined ramp and landing to accomplish a change in level at a curb. This element provides street and sidewalk access to pedestrians using wheelchairs.

Current illegal use of drugs means illegal use of drugs that occurred recently enough to justify a reasonable belief that a person's drug use is current or that continuing use is a real and ongoing problem.

Customer means any person who applies for, receives, or participates in an ADOT program, services, or activity

Designated Agency, (23 CFR Subpart G, 35.190) - The USDOT is one of the designated Federal executive agencies with oversight/enforcement responsibilities for the Title II of the Americans with Disabilities Act. The USDOT is required to oversee transportation compliance activities of State and local governments. In turn, the various modes within DOT have certain responsibilities for their respective program areas. FHWA is responsible for pedestrian access as pertains to highways, roadways and walkways within the public right-of-way.

Direct Threat means a significant risk to the health or safety of others that cannot be eliminated by a modification of policies, practices or procedures or by the provision of auxiliary aids and services.

Disability means, with respect to an individual, a physical or mental impairment that substantially limits one or more of the major life activities of such individual; a record of such an impairment; or being regarded as having such an impairment.

(1) (i) The phrase physical or mental impairment means—

(A) Any physiological disorder or condition, cosmetic disfigurement, or anatomical loss affecting one or more of the following body systems: Neurological, musculoskeletal, special sense organs, respiratory (including speech organs), cardiovascular, reproductive, digestive, genitourinary, disorder such as mental retardation, organic brain hemic and lymphatic, skin, and endocrine;

(B) Any mental or psychological syndrome, emotional or mental illness, and specific learning disabilities.

(ii) The phrase physical or mental impairment includes, but is not limited to, such contagious and non-contagious diseases and conditions as orthopedic, visual, speech and hearing impairments, cerebral palsy, epilepsy, muscular dystrophy, multiple sclerosis, cancer,

heart disease, diabetes, mental retardation, emotional illness, specific learning disabilities, HIV disease (whether symptomatic or asymptomatic), tuberculosis, drug addiction, and alcoholism.

(iii) The phrase physical or mental impairment does not include homosexuality or bisexuality.

(2) The phrase ***major life activities*** means functions such as caring for one's self, performing manual tasks, walking, seeing, hearing, speaking, breathing, learning, and working.

(3) The phrase ***has a record of such an impairment*** means has a history of, or has been misclassified as having, a mental or physical impairment that substantially limits one or more major life activities.

(4) The phrase is regarded as having an impairment means —

(i) Has a physical or mental impairment that does not substantially limit major life activities but that is treated by a public entity as constituting such a limitation;
(ii) Has a physical or mental impairment that substantially limits major life activities only as a result of the attitudes of others toward such impairment; or
(iii) Has none of the impairments defined in paragraph (1) of this definition but is treated by a public entity as having such an impairment.

(5) The term ***disability*** does not include—
(i) Transvestism, transsexualism, pedophilia, exhibitionism, voyeurism, gender identity disorders not resulting from physical impairments, or other sexual behavior disorders;
(ii) Compulsive gambling, kleptomania, or pyromania; or
(iii) Psychoactive substance use disorders resulting from current illegal use of drugs.

Drug means a controlled substance, as defined in schedules I through V of section 202 of the Controlled Substances Act (21 U.S.C. 812).

Existing Facilities - Facilities that are neither new facilities nor altered facilities. Neither Title II ADA nor Section 504 necessarily requires a public entity or recipient to make each of its existing facilities accessible to and usable by individuals with disabilities.

Facility means all or any portion of buildings, structures, sites, complexes, equipment, rolling stock or other conveyances, roads, walks, passageways, parking lots, or other real or personal property, including the site where the building, property, structure, or equipment is located.

Federal financial assistance - Under Section 504 means any grant, loan, contract (other than a procurement contract or a contract of insurance or guaranty), or any other arrangement by which the Department provides or otherwise makes available assistance in the form of:
(1) Funds;
(2) Services of Federal personnel; or
(3) Real or personal property or any interest in, or use of such property, including:

(i) Transfers or leases of such property for less than fair market value or for reduced consideration; and
(ii) Proceeds from a subsequent transfer or lease of such property if the Federal share of its fair market value is not returned to the Federal Government.

Grade - The slope parallel to the direction of travel that is calculated by dividing the vertical change in elevation by the horizontal distance covered. For example, a trail that gains 2 m in elevation over 40 m of horizontal distance has a grade of 5 percent.

Grantee means a person or entity who has received a grant from ADOT.

Historic preservation programs means programs conducted by a public entity that have preservation of historic properties as a primary purpose.

Historic Properties means those properties that are listed or eligible for listing in the National Register of Historic Places or properties designated as historic under State or local law.

Illegal use of drugs means the use of one or more drugs, the possession or distribution of which is unlawful under the Controlled Substances Act (21 U.S.C. 812). The term *illegal use of drugs* does not include the use of a drug taken under supervision by a licensed health care professional, or other uses authorized by the Controlled Substances Act or other provisions of Federal law.
Individual with a disability means a person who has a disability. The term *individual with a disability* does not include an individual who is currently engaging in the illegal use of drugs, when the public entity acts on the basis of such use

.

Level of Service (LOS) - A qualitative rating of the effectiveness of a roadway in serving traffic, in terms of operating conditions such as traffic flow, using an alphabetical scale from A to F with A being the best (free flow) and F being the worst (stopped traffic).

Mid-block crossing - A crossing point positioned in the center of a block rather than at an intersection.

Metropolitan Planning Organization (MPO) - An urban regional body for areas with populations larger than 50,000, that makes transportation policy and planning decisions as mandated in Federal transportation legislation.

New Construction - *A* project in which an entirely new facility is built from the ground up or where a new facility is added to an existing facility.

Parallel Curb Ramp - A curb ramp design in which the sidewalk slopes down on either side of a landing at street level; parallel curb ramps require users to turn on the landing before entering the street.

Pedestrian - A person who travels on foot or who uses assistive devices, such as a wheelchair, for mobility.

Perpendicular curb ramp - A curb ramp design in which the ramp path is perpendicular to the edge of the curb.

Places of public accommodation **-** Facilities operated by private entities that fall within the following 12 broad categories defined by Congress: places of lodging, food establishments, entertainment houses, public gathering centers, sales establishments, service establishments, transportation stations, places of recreation, museums and zoos, social service establishments, and places of education.

Primary recipient (under Section 504) **-** means any recipient that is authorized or required to extend Federal financial assistance from the Department to another recipient for the purpose of carrying out a program.

Private entity **-** An individual or organization not employed, owned, or operated by the government.

Program means an administrative area within ADOT including areas designated as "programs" and any program, service, or activity administered by or operated by ADOT's contractors, consultants, grantees, etc.

Programs, Services, or Activities are collectively referred to as "program" or "programs". Used in this policy, include any ADOT program, service, or activity whether within ADOT or administered or operated by a contractor, consultant, grantee, etc.

Public entity means—

(1) Any State or local government;
(2) Any department, agency, special purpose district, or other instrumentality of a State or States or local government; and
(3) The National Railroad Passenger Corporation, and any commuter authority (as defined in section 103(8) of the Rail Passenger Service Act).

Qualified individual with a disability means an individual with a disability who, with or without reasonable modifications to rules, policies, or practices, the removal of architectural, communication, or transportation barriers, or the provision of auxiliary aids and services, meets the essential eligibility requirements for the receipt of services or the participation in programs or activities provided by a public entity.

Qualified interpreter means an interpreter who is able to interpret effectively, accurately, and impartially both receptively and expressively, using any necessary specialized vocabulary.

Reasonable Modification means that ADOT shall make Reasonable Modifications in the policies, practices, or procedures of a program, service, or activity when the modifications are necessary to avoid discrimination based on disability unless the modification would fundamentally alter the nature of the program, service, or activity. A modification of policies, practice or procedures made to a program, service, or activity is one that allows an individual with a disability the opportunity to participate equally in the program, service, or activity or benefit from the service.

Right-of-way **-** The rights, title, and interest in real property necessary for the construction and maintenance of the project. Private property rights may be acquired by donation or acquisition and may be fee-simple, easement, or other form of use agreement acceptable to the parties. The property rights

must be of sufficient duration to match the design life of the project, and in a form that can be recorded on the land records.

Recipient - As defined by Section 504, it means any State, territory, possession, the District of Columbia, or Puerto Rico, or any political subdivision thereof, or instrumentality thereof, any public or private agency, institution, organization, or other entity, or any individual in any State, territory, possession, the District of Columbia, or Puerto Rico, to whom Federal financial assistance from the Department is extended directly or through another recipient, for any Federal program, including any successor, assignee, or transferee thereof, but such term does not include any ultimate beneficiary under any such program. This definition includes primary STA FHWA recipients such as State departments of transportation (STAs) and STA sub recipients such as metropolitan planning organizations (MPOs), local governments, and other State and local government agencies that receive Federal financial assistance through the STA.

Section 504 means section 504 of the Rehabilitation Act of 1973 (Pub. L. 93–112, 87 Stat. 394 (29 U.S.C. 794)), as amended prohibits discrimination on the basis of disability in any program service, activity, or benefit of a recipient/sub-recipient of Federal financial assistance.

Self Evaluation - State and local governments are required to evaluate existing services (this includes transportation and pedestrian facilities), policies, and practices for discrimination practices and barriers, under 28 CFR 35.105. This is a prerequisite for developing the Transition Plan.

Service Animals means an animal, as referenced under the American with Disabilities Act, including guide dog, signal dogs, or other animals trained to assist an individual with a disability. Animals are considered service animals under the ADA regardless of whether they have been licensed or certified by a state or local government and are not required to use any special harness, leash or jacket.

State means each of the several States, the District of Columbia, the Commonwealth of Puerto Rico, Guam, American Samoa, the Virgin Islands, the Trust Territory of the Pacific Islands, and the Commonwealth of the Northern Mariana Islands.

State Department of Transportation (STA) - Means, for the purposes of this policy, an agency whose primary mission is the planning, construction, operation and maintenance of transportation projects, programs, including roads and highways and is the primary recipient or sub-recipient of Federal Financial Assistance.

Transition Plan-Under 28 CFR *35.150*, a written plan that identifies the barriers to be removed, the timetable for completion and funding sources for removing information and physical barriers and the installation of curb ramps. Work included in the Transition Plan is an ongoing process requiring periodic updates.

Truncated Domes - Small domes with truncated tops that are detectable warnings used at transit platforms, curb ramps, and hazardous vehicular ways.

Undue Financial Burden means a significant difficult expense or impact on ADOT when considered in light of factors such as an employer's size, financial resources, and the nature and structure of its operations and as defined by the Americans with Disabilities Act.

United States Code (USC) - The United States Code is the codification by subject matter of the general and permanent laws of the United States. It is divided by broad subjects into 50 titles and published by the Office of the Law Revision Counsel of the U.S. House of Representatives.

2.08 POLICY

A. General

1. No qualified individual with a disability shall, on the basis of disability, be discriminated against, be excluded from participation in, or be denied the benefits of the services, programs or activities of the Department. ADOT shall provide reasonable modifications when necessary to avoid discrimination.

2. ADOT shall not directly or through contractual, licensing, or other formal or informal arrangements, on the basis of disability: deny a qualified person with a disability the opportunity to participate in a service, program, or activity to receive the benefits or services offered in accordance with law.

a. ADOT shall not use methods of program administration that have a discriminatory effect on individuals with disabilities.

b. ADOT shall not use eligibility criteria that unlawfully screen out individuals with disabilities.

ADOT shall not assess a charge or fee to an individual with a disability to cover the cost of measures required to provide the individual with the non-discriminatory treatment required by this policy.

B. Who is Protected

1. Individuals with Disabilities

The ADA and Section 504 protect an individual with a disability who, with or without reasonable modifications to rules, policies, or practices, the removal of architectural, communication, or transportation barriers, or the provision of auxiliary aids and services, meets the essential eligibility requirements for the receipt of services or the participation in programs provided by ADOT or its sub-recipients, contractors, consultants and grantees.

"Disability" means that an individual:

a. Has a physical or mental impairment that substantially limits one or more of the major life activities of such individual;

b. Has record of such impairment; or

c. Is being regard as having such impairment. An individual meets the requirement of "being regarded as having such an impairment" if the individual establishes that he or she has been subjected to an action prohibited under the ADA because of an actual or perceived physical or mental impairment whether or not the impairment limits or is perceived to limit a major life activity. The term "being regarded as having such impairment" does not apply to impairments that are transitory and minor. A transitory impairment is impairment with an actual or expected duration of 6 months or less.

d. If an individual meets any of the above test (subsections a through c), he or she is considered an individual with a disability for purposes of protection under the ADA and Section 504.

e. Physical and mental impairments include, but are not limited to: heart disease, cancer, cerebral palsy, vision impairments, mobility impairments, deafness, asthma, seizure disorders, paraplegia, HIV, developmental disabilities, cognitive disabilities, learning disabilities, clinical depression, bipolar, obsessive-compulsive disorder, post traumatic stress disorder, anxiety disorders, alcoholism, and many other conditions.

f. Major life activities include but are not limited to, caring for oneself, performing manual tasks, seeing, hearing, eating, sleeping, walking, standing, lifting, bending, speaking, breathing, learning, reading, concentrating, thinking, communicating, and working. A "major life activity" also includes the operation of major bodily function, including but not limited to, functions of the immune system, normal cell growth, digestive, bowel bladder, neurological, brain, respiratory, circulatory, endocrine, and reproductive functions.

g. An individual need not meet the definition of a disability under the Social Security Supplemental Security Income (SSI), Social Security Disability Income (SSDI), or Veterans Administration (VA) programs, or other disability benefits programs to qualify as an individual with a disability under the ADA or Section 504.

h. Alcoholism is impairment under the ADA. If it substantially limits a major life activity, it is a disability and therefore protected by the ADA.

i. Individuals with a past history of engaging in the illegal use of drugs, who are not currently engaged in the illegal use of drugs, who are enrolled in a supervised drug rehabilitation program or have successfully completed such a program, are protected by the ADA.

j. "Current use" is the illegal use of controlled substances that occurred recently enough to justify a reasonable belief that a person's drug use is current or that continuing use is a real and ongoing problem.

k. The Department shall not exclude an individual from a program, or deny equal opportunity to participate in and benefits from programs on the basis that the individual has a history of drugs, if the individual is currently participating in or has successfully completed a supervised drug rehabilitation program and is not currently engaging in illegal drug use.

2. Other Individuals Protected

a. The ADA protects people who have a past history of disability, if they are being discriminated against based on that past history.

b. The ADA protects people who are wrongfully perceived as having disabilities, if the program, service, or activity makes decisions on the basis of that perception.

c. In addition, the ADA prohibits discrimination against individuals that do not have disabilities themselves, but have a known relationship or association with individuals who have disabilities such as family members or friends.

C Who Must Comply with the ADA and Section 504

1. Title II of the ADA applies to the programs and services of all state and local governments and their agencies and departments, such as ADOT. It applies when programs and services are being provided directly by ADOT or its Divisions, and when those programs and services are being provided by grantees, consultants or contractors, such as third party contractors providing services under contract for ADOT's Motor Vehicle Division. When ADOT's programs are provided by grantees, consultant or contractors, it is the responsibility of the Department to ensure that contractors understand their obligations under the ADA, inform individuals about their rights under the ADA, and comply with the ADA.

2. Section 504 of the Rehabilitation Act ("Section 504") applies to all of the operations of a department or agency of a state or local government that receives federal financial assistance. ADOT's programs that receive financial assistance shall comply with Section 504. ADOT's consultants and contractors whose services are funded with federal financial assistance shall also comply with Section 504. In addition, Section 504 of the Rehabilitation Act of 1973, as amended, extends the prohibition of discrimination on the basis of disability to all activities of State and local governments including those that do not receive Federal financial assistance (28 CFR 35.102-35.104)

3. The ADA and Section 504 have overlapping requirements. For the sake of simplicity, this policy shall refer to the ADA, but Section 504 has similar requirements.

D. Administrative Responsibilities

The Department shall have an agency-wide ADA Coordinator.

1. **ADA Coordinator**

   a. The Director or designee shall appoint an agency-wide ADA Coordinator responsible for administering Department-wide compliance with Title II of the ADA and Section 504, and other state and federal disability discrimination laws.

   b. The ADA Coordinator is central to ensuring ADOT's ADA compliance. The role of the ADA coordinator includes:

      (i.) Coordinating overall ADA compliance;
      (ii.) Involving people with disabilities and interested parties in the compliance process;
      (iii.) Overseeing the Department's ADA Self-Evaluation;
      (iv.) Overseeing the Department's Transition Plan; and
      (v.) Overseeing the investigation of complaints and/or grievances.
      (vi.) Authorization (from the Director and/or Designee) to require those within ADOT's programs, services or activities and Divisions to modify policies and practices to accommodate the individual with a disability.

2. **Division Responsibilities**

   In addition to the ADA Coordinator responsibilities, ADOT's Divisional responsibilities include, but are not limited to:

   a. Ensuring that all contracts to provide services to individuals, and all contracts for programs, services, or activities receiving federal financial assistance, require the party with whom ADOT is contracting with to comply with the ADA and Section 504;

   b. Assisting in procuring or obtaining forms and publications in alternative formats when requested by or on behalf of individuals with disabilities, or by an ADOT program or Division;

   c. Assisting the ADA Coordinator in ensuring that materials are provided in alternative formats that are accessible to people with disabilities when needed;

   d. Assisting with the development and review of ADA training materials that are tailored to the particular ADOT program, service, or activity;

   e. The Office of Facilities Management & Support Group shall be responsible for oversight of physical accessibility of program sites in which ADOT's programs, services, or activities are delivered. This oversight includes:

      (i) Ensuring that new construction complies with accessibility guidelines;
      (ii) Ensuring building modifications are made in compliance with the ADA; and

(iii) Negotiating accessibility issues when renewing leases, including assigning responsibility for accessibility matters between the landlord and tenant, as appropriate.

2.09 POLICY STANDARDS

A. Program, Service, or Activity Requirements

Every facet of ADOT's programs, services, or activities must comply with ADA and cannot be operated in a manner that has a discriminatory effect. This includes but is not limited to: the application process, documentation and reporting requirements, agency appointments, public meetings, hearings and events, licensing, certification, work activities.

B. Eligibility Criteria – Programs, Services, or Activities May Not Exclude or Screen Out Individuals with Disabilities

1. ADOT shall not exclude qualified individuals with disabilities from ADOT's programs, services, or activities on the basis of disability if they meet the programs essential eligibility requirements, with or without reasonable modification of rules, policies, or procedures, or the provision of auxiliary aids and services.

2. ADOT shall not apply eligibility criteria or standards that screen out or tend to screen out an individual with a disability or a class of individuals with disabilities from fully and equally enjoying any programs, services, or activities unless such criteria can be shown that such requirements are necessary for the provision of the program, service, or activity. Anyone with questions as to these criteria should consult with the ADA Coordinator.

3. When there is a barrier to eligibility or participation that is related to an individual's disability and the program, service, or activity's eligibility criteria, the program, service, or activity should apply the reasonable modification provisions of this policy.

4. ADOT may impose legitimate safety requirements even if they screen out individuals with disabilities.

    a. The safety screening requirements shall be based on actual risk, not non speculation, stereotypes, or generalizations about individuals with disabilities or on the basis of presumptions about what a class of individuals with disabilities can or cannot do.

    b. Safety standards shall be applied to all individuals or participants, and ADOT's inquiries shall be limited to matters necessary to implement the safety standards.

C. Ensuring Access to Programs, Services, or Activities to Individuals with Disabilities

1. Programs, Services or Activities

a. ADOT shall ensure that each program, service, or activity is readily accessible to and usable by individuals with disabilities.

b. ADOT's programs, services, or activities shall provide meaningful access and an equal opportunity to participate in and benefit from programs, services, or activities to individuals with disabilities.

c. ADOT's programs and services shall be accessible to and usable by people with disabilities, even if each and every building or program site is not physically accessible. The Department shall identify alternative locations or make information and services accessible by other means as needed. The Department also understands in accordance with the ADA regulations that it is not necessarily required to make each of its existing facilities accessible (28 CFR 35.149-35.150).

d. If a program site provides parking for the public, a specified number of those spaces shall meet ADA Accessibility Guidelines (36 CFR Part 1191).

2. New Construction and Building Alterations

a. As required by law, buildings or parts of buildings built or altered by, on behalf of, or for state and local governments, in which construction began after January 26, 1992 shall be designed and constructed to be accessible to or usable by people with disabilities and comply with the 2010 ADA Standards for Accessible Design (28 CFR 35.151 and 36 CFR part 1191, Appendices B and D).

b. ADOT shall ensure that communication requirements applicable to new construction and building alterations are followed.

c. In accordance with State and Federal Requirements ADOT's Facilities Management & Support Group shall use and maintain signs that clearly designate all available exits from all buildings. The Facilities Management & Support Group shall provide signage at all inaccessible entrances of ADOT's facilities, directing users to accessible entrance or to a location at which they can obtain information about accessible facilities. The international symbol for accessibility shall be used at each accessible entrance for a facility.

D. Unnecessary Inquiries

ADOT shall not make any unnecessary inquiries into the existence of any individual disability.

E. Surcharges

Although some ADA compliance may result in some additional cost to ADOT, the Department shall not place a surcharge only on particular individuals with disabilities or groups of individuals with disabilities to cover these expenses.

F. Reasonable Modification

1. Right to Reasonable Modification

ADOT shall provide individuals with disabilities with reasonable modifications when necessary to have an equal and meaningful opportunity to participate in and benefit from ADOT's programs, services, or activities.

ADOT shall make reasonable modifications to policies, practices, or procedures of a program, service, or activity at no cost to the individual with a disability when the modifications are necessary to avoid discrimination based on disability unless the modification would fundamentally alter the nature of the program, service, or activity, or create an undue administrative or financial burden.

2. Requesting Modifications

Individuals with disabilities have a right to ask ADOT's programs, services, or activities for reasonable modifications.

a. Request for reasonable modifications may be made verbally or by completing a Request for Reasonable Modifications form. The employee receiving a verbal request shall document the request by completing a Reasonable Modifications form. Programs, services, or activities cannot require individuals to use or sign special forms to make requests or waive a right for reasonable modifications.

b. Whenever an individual indicates difficulty in accessing or participating in a program, service, or activity due to a disability, the employee shall advise the individual that he or she may make a request for reasonable modifications and offer assistance with making that request. In addition, individuals do not have to say the words "ADA" or "reasonable modification" to trigger ADOT's obligation to treat the statement as a request for a modification.

c. If the employee knows that the individual has a disability that is causing the individual to have difficulty accessing services or participating in a program, service, or activity, the individual should be advised that he or she may make a request for reasonable modifications and should be offered assistance, if appropriate, in making the request.

d. Individuals with disabilities have the right to change their minds at any time and accept a reasonable modification that was previously offered and declined. They also have the right to request a reasonable modification other than the modification offered or requested in the past.

3. Granting Modifications Requests

Employees who interact with individuals during the provision of services shall have the responsibility and the authority to provide reasonable modifications for individuals with disabilities, and shall be aware of applicable procedures to ensure requests are resolved in a reasonable and timely manner.

If an employee believes that an individual requesting a modification is not entitled to a modification, or not entitled to specific modification requested, the employee shall consult with a supervisor before denying a modification request. If the reason for the denial is that the modification would result in a fundamental alteration or undue burden, the supervisor shall consult with the ADA Coordinator prior to approving or declining the request. If the request cannot be informally resolved, the individual requesting the modification may resolve any grievance resulting from the modification denial decision through the grievance process.

4. Documentation and Disability for Modifications and Interim Modifications

a. Employee must not require documentation of an obvious disability, for example, if the person is blind or in a wheelchair, unless:

   (i) The program and the individual with a disability disagree about what type of modification would meet the needs of the individual with a disability, and documentation from the individual would explain why a modification offered by a program would not meet the needs of the individual with disability.

b. In situations where there is a question about the existence of a disability or whether the modification is appropriate to address the barrier for service or participation, ADOT may seek documentation of a disability from a physician or appropriate licensed professional. The requested documentation shall verify the disability and its relationship to the barrier to service or participation, and how the requested modification would reduce or eliminate the disability to permit the individual with a disability to meet service or participation requirements. Documentation of the existence of a disability is considered sufficient if it confirms the existence of the disability, the permanent or temporary nature of the disability, and the functional limitations caused by the disability. Only the information related to the disability generating the need to be accommodated may be requested; other medical documentation is irrelevant.

5. Modifications Needed on an Ongoing Basis

ADOT programs, services, or activities shall put procedures in place to ensure that modifications needed on an ongoing basis are provided on that basis, so that a person with a disability does not have to request the same modification each time it is needed.

6. Timeframe to Provide Reasonable Modifications

a. Modifications shall be provided in time to avoid discrimination. The time period depends on factors, including but not limited to, the type of modification requested and the consequences to the individual of failing to provide it immediately. Failure to provide modifications that can easily be provided may result in a denial of equal or meaningful access.

b. Depending upon the modification requested and the circumstances, it may take some time to arrange for a modification, and it may not be feasible to provide the modification immediately or on the same day it is requested.

c. For activities that are scheduled in advance, Department staff should encourage persons who may need modification to request them as early as possible before the activity.

7. Notice of Denial

Divisions and programs shall only make a determination to deny a request for reasonable modification after consulting with the agency ADA Coordinator. If the division or program area denies a request for a modification, the agency ADA Coordinator shall ensure that a written notice is sent to the individual. This notification shall include in the denial notice an explanation for why the modification request is being denied, or why the program decided to offer a modification other than the one that was requested. The notice should also identify any alternative modifications that are offered. The written notice of denial shall also inform the individual with a disability of how to file an ADA grievance.

8. Individuals with Disabilities Cannot Be Required to Accept Modifications

Nothing in this policy requires an individual with a disability to accept a modification, service, opportunity, or benefit provided under this policy. Individuals with disabilities have a right to refuse modifications, and cannot be excluded from programs, services, or activities because they refused a modification. If, however, as a result of refusing modification and the program having advised the individual with a disability of the consequences of the refusal, the program can take action against the individual with a disability on the basis that the individual with a disability is not complying with program requirements.

9. Reasonable Modification Available Regardless of Whether a Disability is Apparent

Reasonable modification shall be provided regardless of the appearance or lack of appearance of a disability. Department employees not trained in determining disability accommodation or modification shall not make determinations on the need of clients requesting these services.

10. Consideration for Program-Specific Procedures

a. Department programs, services, or activities shall develop and implement program-specific reasonable modification procedures for individuals with disabilities.

b. Program specific reasonable modification procedures shall ensure that, at a minimum, all Department policies are adhered to. While program specific procedures may adopt shorter time frames for providing reasonable modifications, they cannot adopt longer timeframes than those required by this policy. Additionally, program specific procedures shall be consistent with the following:

(i) Reasonable modification is appropriate when there is a connection between an individual's disability and the barrier to eligibility or participation in a program, service or activity.

(ii) First consideration should be given to addressing barriers using existing program, service, or activity resources.

(iii) Employees are to assist individuals requesting modification to provide the necessary information to establish a reasonable modification plan.

11. Policy Does Not Limit Benefits or Services

Nothing in this policy prohibits the Department from providing benefits or services to individuals with disabilities, or to a particular class of individuals with disabilities beyond those required.

12. No Requirement to Provide Personal Devices

a. This policy does not require a program, service, or activity to provide individuals with disabilities with personal devices such as wheelchairs; individually prescribed devices such as prescription eyeglasses or hearing aides; readers for personal use or study; or services of a personal nature including assistance in eating, toileting or dressing, unless such personal services or devices are customarily provided to the individuals participating in the program, service, or activity.

b. In some instances the Department may choose to provide equipment or services of a personal nature as an alternative to providing another type of modification.

G. Communications (Including Auxiliary Aids and Services)

ADOT programs, services, or activities shall provide effective communication with individuals with disabilities and member of the public with disabilities where necessary to ensure an equal opportunity to participate in, and enjoy the benefits of, a program, service, or activity unless it would result in a fundamental alteration of the program, service, or activity or an undue financial or administrative burden.

1. Auxiliary Aids and Services

a. ADOT programs, services, or activities shall provide auxiliary aids and services including alternate format communication to individuals with disabilities of their choice unless it can be demonstrated that the choice would result in a fundamental alteration or an undue burden in which case, an alternative effective means of communication shall be used, if it exist.

b. The type of auxiliary aid or service necessary to ensure effective communication shall vary depending on the needs of the individual with a disability and the length or complexity of the communication.

c. In determining the type of auxiliary aid or service necessary, ADOT shall give primary consideration to the request of the individual with a disability.

d. Example of auxiliary aids and services include, but are not limited to: assistive listening devices, open and closed captioning, qualified sign language interpreters, Speech to Speech Relay, Hearing Carry-Over (Text Telephones), speech synthesizers, communicating through keyboard, note takers, telephone amplifiers, videotext displays, teletypewriters (TTYs), email, Braille materials, large-print text, oral presentation, and audiotape recording and other effective methods of communication.

e. ADOT programs, services, or activities shall provide information to individuals with disabilities, and members of the public about the methods by which the program, service or activity communicates with individuals with disabilities, the fact that auxiliary aids and services are available, and how to request them.

2. Sign Language Interpreters

a. ADOT programs, services, or activities, shall provide qualified sign language interpreters to individuals who are deaf or hard of hearing, who use sign language to communicate, when necessary to communicate effectively with a ADOT program, service, or activity. Individuals who are deaf or hard of hearing cannot be required to bring an interpreter with them to appointments, or to pay for an interpreter provided by the ADOT program.

b. ADOT programs, services, or activities cannot require or persuade individuals with disabilities to provide their own interpreters, but an individual with a disability has a right to provide his or her own interpreter or have a relative or friend interpret if the individual prefers.

c. To be a qualified interpreter, the interpreter shall be able to interpret effectively and impartially, using specialized vocabulary relevant to the ADOT program, service, or activity.

d. In some circumstances, Department employees may be able to communicate effectively with a deaf or hard of hearing person during simple interactions through the use of written notes. For more lengthy and complex interactions, such as interviews to determine eligibility for services, interviews to determine an individual's needs (such as those used to develop service), conciliation meetings, and administrative hearings, writing notes is not an effective means of communication and should not be used.

e. When an individual who is deaf or hard of hearing is limited English proficient, Department employees must provide vital program information in their preferred language.

f. Programs, services, or activities may either have qualified interpreters on staff or use contract service providers that interpret on an as-needed basis. ADOT programs can also use when available video conferencing technology to access an interpreter at remote location where available.

3. Telephone and Other Remote Communication

a. Public entities such as ADOT that communicate by telephone must provide equally effective communication to individuals with disabilities, including hearing and speech impairments. If telephone relay services are available, those services generally may be used to meet this requirement. Relay services involve a relay operator who uses both a standard telephone and a TDD to type the voice messages to the TDD user and read the TDD messages to the standard telephone user. Where such services are available, public employees must be trained to accept and handle relayed calls in the normal course of business.

b. ADOT may use several options for communicating by telephone with deaf and hard of hearing individuals.

(i) Teletext typewriters (TTYS) type and receive written messages.

(ii) Telephone relay services (7-1-1) use a toll-free relay operator to read messages so that a person with a TTY can communicate with a person or agency without a TTY.

(iii) Video relay or Video Relay Services (VRS) involves the use of a computer monitor and telephone to access relay operator who can see and be seen by a deaf caller and can serve as an interpreter between the deaf caller and a standard telephone user.

c. Employees who receive calls from individuals with the public shall be instructed that silence on the other end of the phone may indicate that it is a relay call, and employees should not hang up immediately if they do not hear a voice. If the program, service, or activity has a TTY programmed to be answered automatically

instructing callers to leave messages, it shall have a procedure in place to check and return TTY messages and return calls on the same day that the message is received.

d. Programs, services, or activities cannot adopt procedures that have a discriminatory effect on individuals with disabilities who need a third party to communicate with a program on their behalf. Programs shall have mechanisms in place that enable individuals with disabilities to submit an authorization form to the program authorizing the program to communicate with a third party on the individual's behalf.

4. Interactive Voice Response System (IVR)

If ADOT program does not have a TTY number, and a TTY user places a call through a relay operator, the IVR may not provide sufficient time for a caller to indicate his or her selection the relay operator and for the relay operator to enter the selection. If the ADOT program does not have a TTY and uses IVR, the system shall be programmed to ensure that persons using voice relay have the ability to access a live person who can accommodate their communication needs.

5. Email Communications

Email may be an effective way to communicate with individuals with disabilities and members of the public with disabilities. Many deaf and hard of hearing individuals prefer email and text messaging to TTYs.

If ADOT uses email to provide effective communication, as an equal and meaningful opportunity for individuals with disabilities to participate in and benefit from programs, services, or activities, ADOT will establish procedures requiring employees to check and respond to such messages within a reasonable period of time. ADOT will also inform individuals with disabilities, and members of the public that they can communicate with a program or employees by email.

6. Notice to Individuals and the Public about Effective Communication and Individuals with Disabilities

ADOT provides information to individuals and members of the public about the methods by which the program, service, or activity communicates with individuals with disabilities, the fact that auxiliary aids and services are available, and how to request them. Programs can meet the obligation to provide this notice by including information about effective communication in consumer materials that provide information about ADA rights. If the program has a TTY number, the number is included in notices, brochures, and other written materials that include the program's voice telephone number.

7. Web Site Accessibility

ADOT will provide access to ADOT material to individuals with disabilities that is as effective as access provided to individuals without disabilities. ADOT is not required to purchase computers for individuals or to pay for Internet or other computer access services for an individual

H. Disability-Related Non-Compliance with Program, Service, or Activity Requirements

Department employees shall take into account the potential impact of known disabilities when making a finding of willfulness or intent to refuse to comply with programmatic requirements. The Department shall offer reasonable modification when the modification will allow the individual with a disability to comply.

1. Department staff shall be sensitive to the difficulties that some individuals with disabilities have that make it difficult to meet ADOT program, service, or activity requirements, including complying with program notices, gathering documents, or complying with other program, service, or activity requirements.

2. Some individuals do not have disabilities themselves, but are caring for family members with disabilities, and these caretaking responsibilities make it difficult to comply with program, service, or activity requirements. The federal or state laws governing a particular program, service or activity may require that caretaker responsibilities be taken into account.

I. Service Animals

Service animals include any guide dog, signal dog, or other animal individually trained to provide assistance to individuals with disabilities. Service animals are allowed to enter all ADOT facilities, institutions, and programs to assist individuals, employees, and the public with accessibility. Service animals are not required to be licensed or certified and not required to wear special identity collars or harnesses.

J. Fundamental Alteration

When a fundamental alteration of a program, service, or activity, or undue financial or administrative burden would occur by providing program access, the Department shall take such action to provide program access that will not result in a fundamental alteration of the program, service, or activity, or result in an undue financial or administrative burden. ADOT may achieve access by:

1. Providing services, activities, and programs in facilities that are accessible to individuals with disabilities.

2. Transferring programs, services, and activities from any building that becomes temporarily or permanently inaccessible to an alternate location that is accessible.

3. Modifying when reasonable, the structure of a facility to ensure that individuals with disabilities have access to programs, services, and activities.

4. Making a reasonable modification of the policies and procedures, or providing auxiliary aids and services within available resources.

Any denial of request for access, an auxiliary aids or services or request for reasonable modification of policy due to a finding of fundamental alteration or undue burden shall be in writing with the reason for denial provided by the responsible division. Notice of denials resulting from a grievance review shall be provided by the ADA Coordinator.

K. Direct Threat

1. When participation in a program by an individual with a disability poses a direct threat, defined as a significant risk to the health or safety of others that cannot be eliminated or reduced to an acceptable level through the provision of auxiliary aids and services or through reasonably modifying policies, practices, or procedures, that person is not considered a qualified individual with a disability and may be excluded from ADOT programs, services, or activities.

2. The determination of direct threat to the health and safety of others shall be documented and based on an individualized assessment relying on current medical evidence, or the best available objective evidence that shows:

   a. The nature, duration, and severity of the risk;

   b. The probability that a potential injury shall actually occur; and

   c. Whether reasonable modifications of policies, practices, or procedures shall lower or eliminate the risk.

3. Inappropriate behavior alone, even though it may make employees and other individuals uncomfortable, does not constitute a direct threat as defined in this section. It is only behavior that amounts to a significant risk to the health or safety of others that is a direct threat.

L. Illegal Drug Use

1. ADOT shall not discriminate on the basis of illegal drug use against an individual who is not currently engaging in illegal drug use.

2. It is not discriminatory for a program, service, or activity to adopt reasonable policies related to drug testing, that are designed to ensure that an individual who formerly engaged in the illegal use of drugs is not engaging in the current illegal use of drugs.

3. An individual with a psychoactive substance use disorder resulting from current illegal use of drugs is not considered to have a disability under this policy unless the individual has disability due to another condition.

M. Discrimination on the Basis of Association

1. ADOT shall not discriminate against individuals that do not have disabilities themselves, but have a known relationship or association with individuals who have disabilities such as family members, friends, or any other individual.

2 An individual who experiences discrimination by association has the right to file a report of discrimination or a grievance with ADOT, file a discrimination complaint with the appropriate federal or state designated agency, or to file a lawsuit.

3. The ADOT ADA Coordinator or designee shall investigate allegations of retaliation against individuals with disabilities or other protected under this policy.

O. Release of Information

If an ADOT Division believes there is a need to share information about an individual's disability with another ADOT program in a separate Division, or with another entity outside of the Division, the program shall follow applicable federal and state law and department policy regarding any such disclosure.

P. Notice of Rights

ADOT programs and services shall provide individuals, and members of the public with information about their rights under the ADA:

1. ADOT offices in which individuals are served shall display an approved poster or flyers that highlight individual rights under the ADA.

2. The Department shall provide information to explain rights of applicants and recipients in relation to services for those with disabilities. The information shall be made available where information about ADOT programs and services are available.

3. Employees shall read and explain the information to the individual whenever an applicant or recipient for ADOT programs or benefits has a disability that interferes or may interfere with the ability to read and/or understand written material.

Q. Grievance Policy and Procedure

1. Right to File a Grievance

Anyone who feels that he or she or another person has been discriminated against in violation of Title II of the ADA or Section 504, may file an ADA grievance by submitting

a grievance to the ADA Coordinator for investigation and resolution. If the ADA Coordinator position was involved in the initial decision to deny a request for a reasonable modification, an individual can file an ADA grievance directly with the ADOT Director's office and request that the Director's Office investigate and decide the grievance.

2. Notice of Right to File a Grievance

a. Individuals shall be informed of their right to file such grievances by posters or flyers in program offices and fliers distributed to individuals.

b. Poster or fliers shall include contact information (name, address, and phone and fax number) of the ADA Coordinator.

c. Notices informing individuals that the request for a reasonable modifications or modification has been denied shall contain information about how to file an ADA grievance with ADOT.

3. Methods of Filing a Grievance

Individuals may file a grievance by telephone, in writing, or on a grievance form. Programs shall inform anyone seeking to file a grievance that they are entitled to help with completing the form, if needed. If a grievance is submitted by telephone, the ADA Coordinator shall take down the information over the telephone and provide the person filing the grievance with a copy of the form or other document describing the grievance, so that the person filing the grievance can review it and make changes if necessary. Alternate formats shall be provided if needed as a modification regarding the grievance process.

4. Deadline for Deciding ADA Grievances

The ADA Coordinator or designee shall investigate and resolve a grievance as soon as possible and in any event within 30 business days after receipt of the grievance. A decision shall be provided to the grievant in writing.

5. Appeal

A grievant who is not satisfied with the initial grievance decision may appeal it to the ADOT Director. Appeals shall be filed at the ADOT Director's Office within 10 days of the date the grievant received notification that the grievance was denied, and shall explain why the grievant disagrees with the initial grievance decision. The ADOT Director shall provide a written response within thirty days of receipt of the appeal.

6. Record Keeping Requirements for ADA Grievances

All ADA grievances shall be documented to include: the name of the grievant; the grievance; the date of the grievance; the investigation; the resolution of the grievance; and any documentation concerning the grievance.

R. Monitoring

All ADOT programs, services, or activities shall develop a system for monitoring compliance with the ADA in ADOT or contracted programs, services and activities. Monitoring shall take place on a regular and ongoing basis, including, but not limited to:

1. A review of a sample of individual case records of individuals with disabilities to determine whether disabilities were identified, modification requests recorded, and modifications provided in a timely fashion;

2. A periodic review of all of the ADA grievances filed with ADOT regarding the program, service, or activity, to identify patterns of problems that may need to be addressed through policy changes, and ensure that grievances were resolved in a timely fashion;

3 Analysis of customer data to identify trends that may indicate a need for policy and program changes (e.g., to see whether individuals with disabilities are losing or being denied benefits and services to a greater extent than others);

   a. Interviews with front line employees to test their familiarity with ADA obligations and modification procedures;

   b. Customer interviews to see whether they are satisfied that their disabilities were accommodated.

S. Training

1. ADOT will provide periodic training to employees to facilitate their understanding of ADOT responsibilities under federal and state civil rights law and regulations, and this policy, governing the delivery of programs, services, and activities.

2. ADOT divisions shall use the Department-wide ADA training.

3. All new employees shall receive initial training, and existing employees shall receive refresher training.

4. Refresher training shall be provided on an annual basis.

T. Contractors and Grantees

1. When ADOT procures services by contract, grant, or intergovernmental agreement (IGA), ADOT shall include requirements in contracts and IGAs that contractors, grantees, or governmental entities under IGA shall comply with Title II and Section 504, in addition to other applicable civil rights laws.

2. All procured contracts, grants, or IGAs shall also include provisions for ADOT to periodically review contractors for compliance with Title II and Section 504.

3. Primary responsibility for adopting policies and procedures to provide non-discriminatory access by an individual or the public to a service, program or activity administered by ADOT lies with ADOT.

2.10 CORRESPONDING POLICIES

PER-2.01 ADOT Americans With Disabilities Policy

Appendix B:
Self-Evaluation Field Survey Checklist

ARIZONA DEPARTMENT OF TRANSPORTATION

Checklist for Buildings and Facilities From the Americans with Disabilities Act Accessibility Guidelines (ADAAG)

Update to the Buildings and Facilities Transition Plan

New Buildings Entering the Inventory Since 2004 (Last Update)

Building Name: _____ **Building No.:** _____

Building Address: _____ **Date:** _____

Name of person completing this evaluation: _____

SURVEY FORM 1: PARKING

N/A ☐

Use with the Minimum Requirements Summary Sheets and ADAAG.

See Minimum Requirements Summary Sheets I and J for special requirements and exceptions which may be allowed in alterations and historic preservation. See also ADAAG 4.1.6 and 4.1.7.

	Total Parking Spaces in Area/Lot:	**Number Accessible:**	**Number Van Accessible:**
General Use: (Use table in 4.1.2(5)(a)):			

Section	**Item**	**Technical Requirements**	**Comments**	**Yes**	**No**	**N/A**
4.1.2(5); 4.6.1	Number - Accessible Parking Spaces:	Where parking spaces are provided for self-parking, are the required number of accessible parking spaces complying with 4.6 (1:25) provided? (All or some of the accessible parking spaces may be in a different location if equivalent or greater accessibility is ensured.)		☐	☐	☐
	Each Area/Lot:	Are the accessible parking spaces located in each specific area/lot? OR If the accessible parking spaces are in a different location, is equivalent or greater accessibility provided in terms of distance from the accessible entrance, cost and convenience?		☐	☐	☐
	Van Accessible Spaces:	Is one in every eight accessible parking spaces (but not less than one) designated "van accessible?"		☐	☐	☐
4.6.2	Location - Serving Accessible Entrance:	Are accessible parking spaces which serve a particular building on the shortest accessible route of travel from adjacent parking to the building's accessible entrance?		☐	☐	☐
	Serving Multiple Accessible Entrances:	If the building has multiple accessible entrances with adjacent parking, are the accessible parking spaces on the shortest accessible route of travel to the parking facility's accessible pedestrian entrance?		☐	☐	☐
	Separate Parking Facility:	Where a parking facility does not serve a particular building, are the accessible parking spaces on the shortest accessible route of travel to the parking facility's accessible pedestrian entrance?		☐	☐	☐
4.6.3	Parking Spaces and Access Aisles - Width of Parking Space:	Are accessible parking spaces, including van spaces, at least 96 inches wide with a demarcated access aisle? (Two spaces may share a common aisle. See Figure 9)		☐	☐	☐
4.1.2(5)(a)	Width of Car Access Aisles:	Are all other access aisles at least 60 inches wide?		☐	☐	☐
4.1.2(5)(b)	Width of Van Accessible Access Aisle:	If the parking space is designated as "van accessible," is the adjacent access aisle at least 96 inches wide?		☐	☐	☐

4.6.3	Level:	Are the accessible parking spaces and access aisles level with no slope greater than 1:50 in all directions? (This means a curb ramp cannot project into the access aisle.)		☐	☐	☐
4.6.3 4.3.6 4.5.1	Surface:	Are access aisles stable, firm, and slip resistant?		☐	☐	☐
4.6.3 4.3	Access Aisle and Accessible Route:	Does each access aisle connect directly to an accessible route complying with 4.3? (Use Form 3: Exterior Accessible Route)		☐	☐	☐
4.3.3		Is the accessible route a full 36 inches wide and not reduced in width by vehicles overhanging parking space?		☐	☐	☐
4.6.4	Signs - Accessible Parking Spaces:	Does each accessible parking space have a vertical sign, which is unobscured by a parked vehicle, showing the International Symbol of Accessibility?		☐	☐	☐
4.6.4	Van Accessible Spaces:	Do van accessible spaces have a vertical sign, which is unobscured by a parked vehicle, showing the International Symbol of Accessibility with an additional sign "Van-Accessible" mounted below the symbol of accessibility? **EXCEPTION: "Van-Accessible" sign is not required if all accessible parking spaces are Universal Parking Design. (See Figure A5)**		☐	☐	☐
4.6.5	Van Accessible Spaces - Vertical Clearance:	Do van accessible spaces have a vertical clearance of at least 98 inches?		☐	☐	☐
		Does one vehicular access route to and from van accessible spaces have a vertical clearance of at least 98 inches?		☐	☐	☐
		(Van accessible spaces may be grouped on one level of a parking structure.)		☐	☐	☐

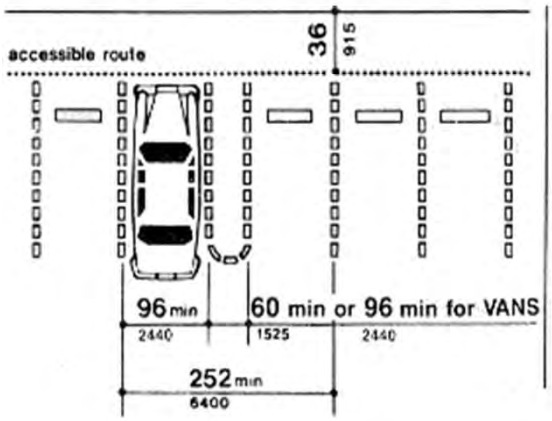

Figure 9
Dimensions of Parking Spaces

The access aisle shall be a minimum of 60 inches (1525 mm) wide for cars or a minimum of 96 inches (2440 mm) wide for vans. The accessible route connected to the access aisle at the front of the parking spaces shall be a minimum of 36 inches (915 mm).

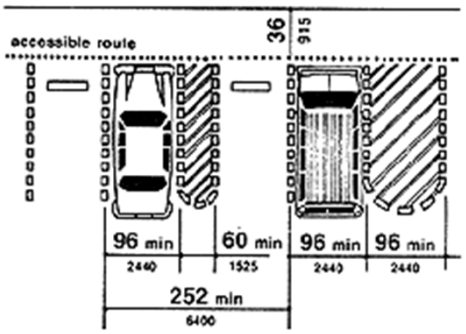

(a)
Van Accessible Space at End Row

Fig. A5
Parking Space Alternatives

Figure A5a

Parking Space Alternatives
Van Accessible Space at
End Row

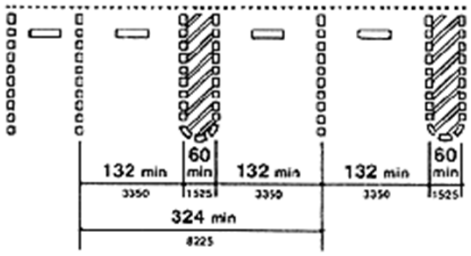

(b)
Universal Parking Space Design

Fig. A5
Parking Space Alternatives

Figure A5b

Parking Space Alternatives
Universal Parking Space
Design

SURVEY FORM 2: PASSENGER LOADING ZONE

N/A ☐

Section	Item	Technical Requirements	Comments	Yes	No	N/A
4.1.2(5)(c)	Loading Zones:	Are passenger loading zones provided? If so, at least one must meet all of the following requirements:		☐	☐	☐
4.6.6	Access Aisle:	Is there an access aisle adjacent and parallel to the vehicle pull-up space?		☐	☐	☐
	Aisle Size:	Is the access aisle at least 60 inches wide by 20 feet long?		☐	☐	☐
	Level Aisle:	Is the access aisle level, with no slope greater than 1:50 in all directions?		☐	☐	☐
	Level Space:	Is the vehicle pull-up space level, with no slope greater than 1:50 in all directions?		☐	☐	☐
4.6.6 4.3.6 4.5.1	Aisle Surface:	Is the access aisle surface stable, firm and slip-resistant?		☐	☐	☐
4.6.6; 4.7	Curbs:	If there are curbs between the access aisle and the vehicle pull-up space, is there a curb ramp complying with 4.7? (Use Form 4: Curb Ramps)		☐	☐	☐
4.29.5	Hazardous Vehicular Area - Detectable Warnings:	If a walk crosses or adjoins the vehicular way and the walking surface is not separated by curbs, railings, or other elements between the pedestrian areas and vehicular areas, is the boundary between the areas defined by a continuous detectable warning at least 36 inches wide complying with 4.29.2? (Dia .9", Height .2", center to center 2.35" - Visual contrast to surrounding area) (Use Form 21: Detectable Warnings)		☐	☐	☐
4.6.5	Vertical Clearance:	Is there at least 114 inches vertical clearance along the vehicle route to the vehicle pull-up space of the accessible passenger loading zone from site entrance(s) and exit(s)?		☐	☐	☐
		Is there at least 114 inches vertical clearance at the accessible passenger loading zone (including vehicle pull-up space and access aisle)?		☐	☐	☐
4.1.2(7)(b)	Sign:	Is there a sign displaying the International Symbol of Accessibility at the accessible passenger loading zone?		☐	☐	☐

SURVEY FORM 3: EXTERIOR ACCESSIBLE ROUTES

N/A ☐

MAY BE HELPFUL TO COMPLETE SURVEY FORM 4, CURB RAMPS BEFORE COMPLETING THIS SURVEY

Accessible Route to be Surveyed:

From: _____

To: _____

Section	Item	Technical Requirements	Comments	Yes	No	N/A
4.1.2(1) 4.3.2(1)	Accessible Route Site - Public Transportation:	Is there an accessible route within the boundary of the site linking an accessible building entrance with the following, if provided: public transportation stops; passenger loading zones; public streets and sidewalks?		☐	☐	☐
	Route for General Public:	Does the accessible route generally coincide with the route for the general public, to the maximum extent feasible?		☐	☐	☐
4.1.2(2) 4.3.2(2)	Buildings Connected:	Is there an accessible route connecting accessible buildings, facilities, elements and spaces on the same site?		☐	☐	☐
4.3.3	Accessible Route Size - Width:	Is the accessible route at least 36 inches wide except at doorways or gates?		☐	☐	☐
	U-Turn	Where the accessible route makes a U-turn around an obstacle less than 48 inches wide, is the pathway width at least 42 inches on approaches and 48 inches in the turn? (See Figure 7(b))		☐	☐	☐
4.3.4	Passing Spaces	If the accessible route is less than 60 inches wide, are there passing spaces at least 60 inches wide and 60 inches long or intersecting walks allowing passing at reasonable intervals not exceeding 200 feet?		☐	☐	☐
4.3.5 4.4.2	Provisions for Persons Who Are Blind - Head Room:	Is there at least 80 inches clear head room on an accessible route?		☐	☐	☐
4.4.2	Cane Detectable Barrier Where Head Room is Less Than 80 Inches:	If there is less than 80 inches clear head room in an area adjoining an accessible route, is there a cane detectable barrier within 27 inches of the floor? (See Figure 8(c-1))		☐	☐	☐
4.4.1	Protruding Objects:	If objects mounted to the wall have leading edges between 27 and 80 inches from the floor, do they project less than 4 inches into the pathway? (Wall mounted objects with leading edges at or below 27 inches may project any amount so long as the required clear width of an accessible route is not reduced.)		☐	☐	☐
		Do free standing objects mounted on posts with leading edges between 27 and 80 inches high (such as a sign or telephone) project less than 12 inches into the perpendicular route of travel?		☐	☐	☐

4.4.1	Protruding Objects:	Is there an accessible path at least 36 inches clear alongside the protruding object? (Note: the width of accessible routes can be reduced to 32 inches clear at points, such as doorways, for a maximum distance of 24 inches).		☐	☐	☐
4.3.7	Slopes - Cross Slope	Is the cross slope of the accessible route no greater than 1:50?		☐	☐	☐
	Walkway Slope:	Is the slope of the accessible route no greater than 1:20?		☐	☐	☐
4.8.1		Where the slope is greater than 1:20, does it comply with the requirements for ramps? (Use Form 7: Ramps)		☐	☐	☐
4.3.8 4.5.2	Changes in Level:	When walkway levels change, is the vertical difference between them less than 1/4 inch? OR Are changes in level between 1/4 inch and 1/2 inch beveled with a slope no greater than 1:2?		☐	☐	☐
		Are curb ramps, ramps, or elevators used for changes in level greater than 1/2 inch? (Lifts may only be used in certain limited situations in new construction. See Minimum Requirements Summary Sheet B and ADAAG 4.1.3(5))		☐	☐	☐
		Does the curb ramp, ramp, or elevator comply with 4.7, 4.8, or 4.10? (Use Form 4: Curb Ramps; Form 7: Ramps; or Form 13: Elevators)		☐	☐	☐
4.3.6 4.5.1	Surface:	Are accessible route surfaces stable, firm and slip-resistant?		☐	☐	☐
4.5.4	Grates:	Is the smaller dimension of grate openings no more than 1/2 inch, and are long dimensions of rectangular gaps placed perpendicular to the usual direction of travel?		☐	☐	☐
4.1.2(7) 4.30.1	Directional and Informational Signs:	Do signs which provide direction to, or information about, functional spaces of the building, comply with 4.30.2, 4.30.3, and 4.30.5? (Use Form 19: Signage)		☐	☐	☐
4.1.2(7) 4.30.1	Room Identification Signs:	Do signs which designate permanent rooms and spaces comply with 4.30.4, 4.30.5, and 4.30.6? (Raised and brailled characters and symbols, Contrasting letters/symbols and non-glare background, latch side of door when possible, 60" high at centerline, or adjacent wall when no room on latch side exists, may be approached without standing in front of door) (Use Form 19: Signage)		☐	☐	☐
4.1.2(7) 4.30.7	Symbols:	If provided, are the following elements identified by the International Symbol of Accessibility?		☐	☐	☐
		(a) accessible parking spaces;		☐	☐	☐
		(b) accessible passenger loading zones;		☐	☐	☐
		(c) accessible entrances when not all are accessible;		☐	☐	☐
		(d) accessible toilet and bathing facilities when not all are accessible		☐	☐	☐
4.1.3(8)(d)	Directions to Accessible Entrance:	When not all entrances are accessible, is there directional signage indicating the accessible route to an accessible entrance?		☐	☐	☐

4.29.5	Hazardous Vehicular Areas -Detectable Warnings:	If a walk crosses or adjoins a vehicular way, and the walking surfaces are not separated by curbs, railings, or other elements between the pedestrian areas and vehicular areas, is the boundary between the areas defined by a continuous detectable warning at least 36 inches wide complying with 4.29.2? (Dia .9", Height .2", center to center 2.35" - Visual contrast to surrounding area) (Use Form 21: Detectable Warnings)		☐	☐	☐

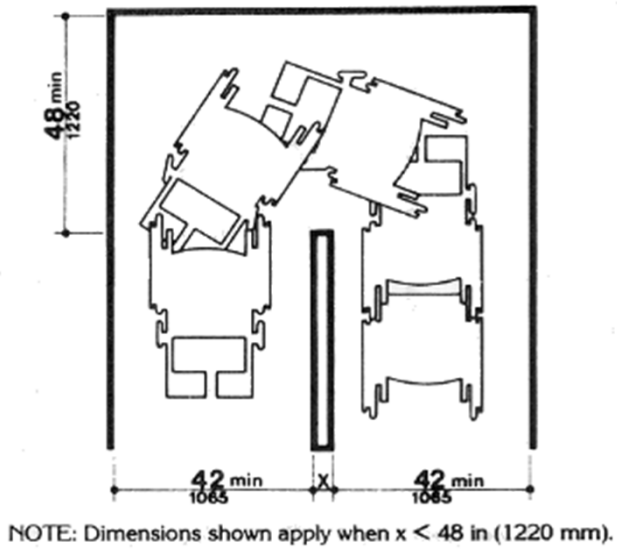

Figure 7(b)
Accessible Route
Turns around an Obstruction

A U-turn around an obstruction less than 48 inches (1220 mm) wide may be made if the passage width is a minimum of 42 inches (1065 mm) and the base of the U-turn space is a minimum of 48 inches (1220 mm) wide.

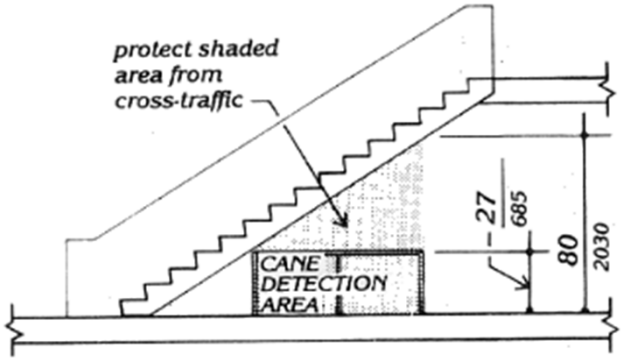

Figure 8c-1
Protruding Objects
Overhead Hazards

Overhead Hazards. As an example, the diagram illustrates a stair whose underside descends across a pathway. Where the headroom is less than 80 inches, protection is offered by a railing (2030 mm) which can be no higher than 27 inches (685 mm) to ensure detectability.

SURVEY FORM 4: CURB RAMPS

N/A ☐

Curb Ramp Location:

Section	Item	Technical Requirements	Comments	Yes	No	N/A
4.7.1	Curb Ramp - Location:	Is there a curb ramp wherever an accessible route crosses a curb?		☐	☐	☐
4.7.2 4.8.2	Slope:	Is the slope of the curb ramp 1:12 or less in new construction?		☐	☐	☐
4.7.2	Transition:	Is the transition from the curb ramp to the walkway and to the road or gutter flush and free of abrupt changes?		☐	☐	☐
	Counter Slope:	Are the running slopes of the road, gutter or accessible route adjoining the ramp no greater than 1:20?		☐	☐	☐
4.7.3	Width:	Is the width of the curb ramp, not including the flared sides, at least 36 inches?		☐	☐	☐
4.7.4 4.5.1	Surface:	Is the surface of the curb ramp stable, firm and slip-resistant?		☐	☐	☐
4.7.5	Side Flares:	If the curb ramp is located where pedestrians must walk across it or where it is not protected by handrails or guard rails, does it have flared sides?		☐	☐	☐
	Side Flare Slope:	Do these flared sides have a slope of 1:10 or less?		☐	☐	☐
		Where the space at the top of the ramp is less than 48 inches and wheelchair users must use the side flares for access, do the flared sides have a slope of 1:12 or less? (See Figure 12(a))		☐	☐	☐
4.7.5	Returned Curbs:	If sharp return curb cuts are present, is pedestrian cross traffic prohibited by walls, guardrails, shrubbery, or other elements? (See Figure 12(b))		☐	☐	☐
4.7.6 4.6.3	Built-up Curb Ramps:	Are built-up curb ramps located so that they do not project into vehicular traffic lanes or parking access aisles?		☐	☐	☐
4.7.7	Detectable Warning:	Does the curb ramp have a detectable warning?		☐	☐	☐
4.29.2	Domes:	Does the detectable warning consist of raised truncated domes?		☐	☐	☐
	Size and Spacing:	Are the truncated domes 0.9 inches in diameter and 0.2 inches in height with a center-to-center spacing of 2.35 inches? All measurements are nominal. (See Figures below)		☐	☐	☐
	Visual Contrast:	Does the detectable warning contrast visually with adjoining surfaces (light-on-dark or dark-on-light)? Is the material used to provide contrast an integral part of the walking surface?		☐	☐	☐
4.7.8	Parked Vehicles:	Are curb ramps located or protected so that they will not be obstructed by parked vehicles?		☐	☐	☐
4.7.9	Curb Ramps at Crosswalks:	Are curb ramps at crosswalks wholly contained within the crosswalk lines, except for the flared sides?		☐	☐	☐

4.7.10	Diagonal Curb Ramps:	If diagonal (or corner-type) curb ramps have returned curbs or other well-defined edges, are these edges parallel to the direction of the pedestrian traffic flow?		☐	☐	☐
	Bottom of Diagonal:	Is there at least 48 inches clear space within the crosswalk lines at the bottom of a diagonal curb ramp?		☐	☐	☐
	Straight Curb:	If the diagonal curb ramp has flared sides, is there at least a 24 inch segment of straight curb located on each side of the curb ramp within the crosswalk lines?		☐	☐	☐
4.7.11	Island:	Where an accessible pathway crosses an island, is the island cut through at street level?		☐	☐	☐
		OR				
		Are there curb ramps on both sides and a level area at least 48 inches long between them? (With a 6 inch high curb, the island will be at least 16 feet wide.)				

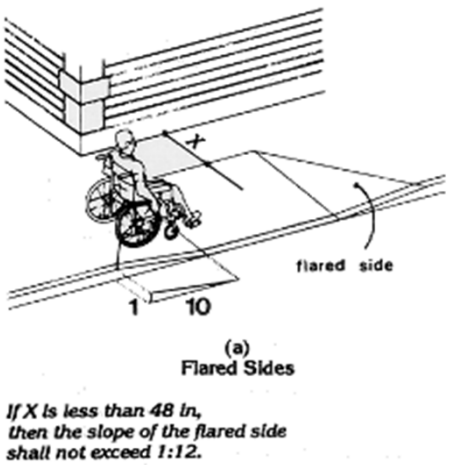

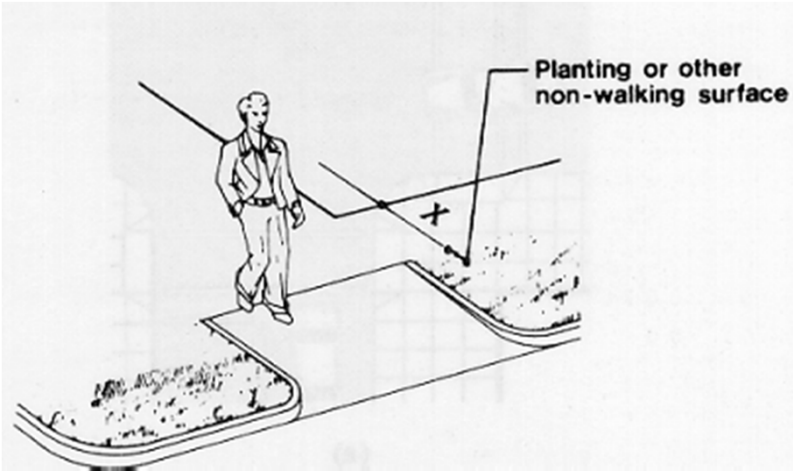

Figure 12a
Sides of Curb Ramps

Flared Sides If X is less than 48in, then the slope of the flared side shall not exceed 1:12.

Figure 12b
Sides of Curb Ramps

Returned Curb If X is less than 48 in, then the slope of the flared side shall not exceed 1:12.

If the landing depth at the top of a curb ramp is less than 48 inches, then the slope of the flared side shall not exceed 1:12.

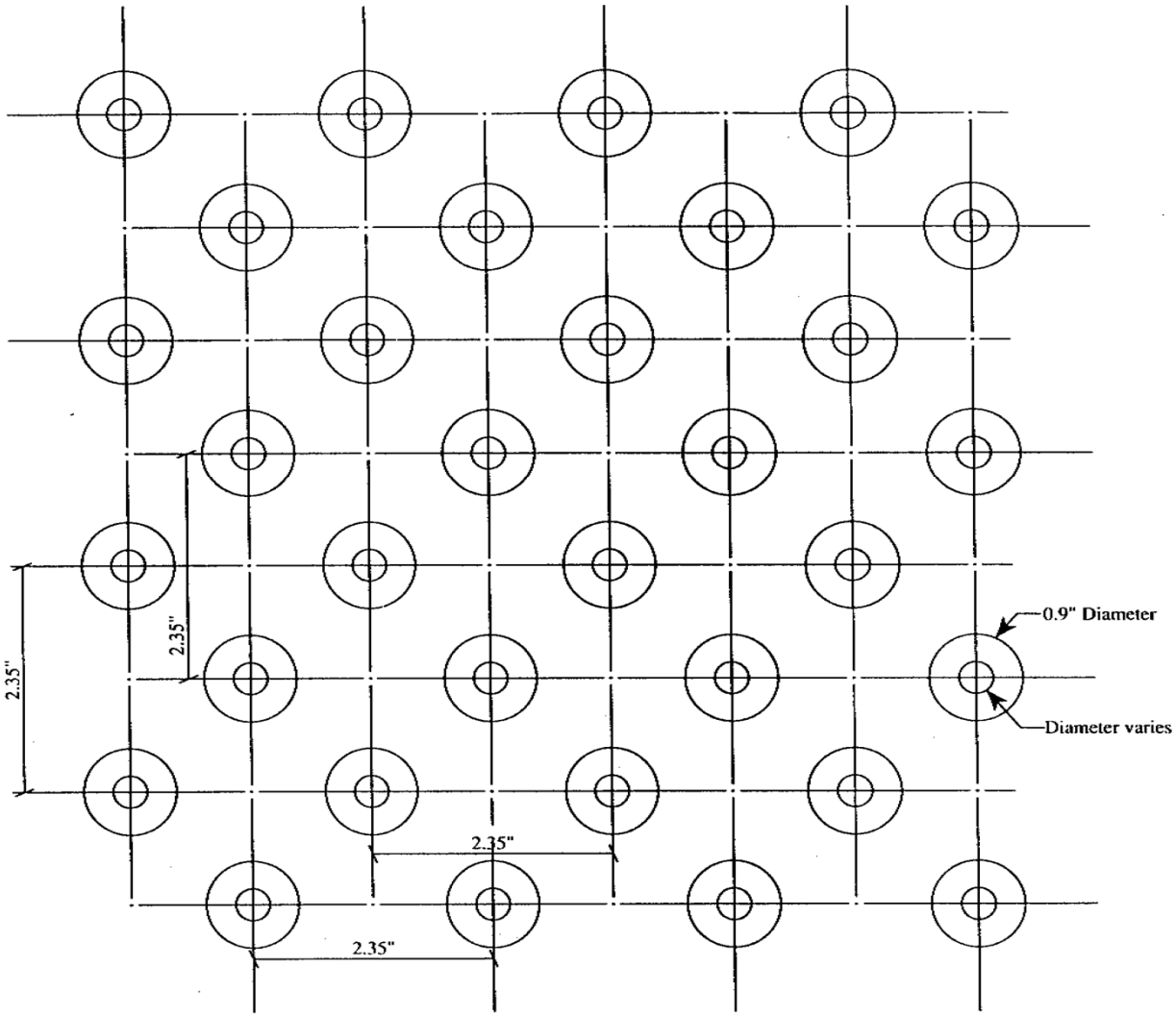

Detectable Warning: Pattern

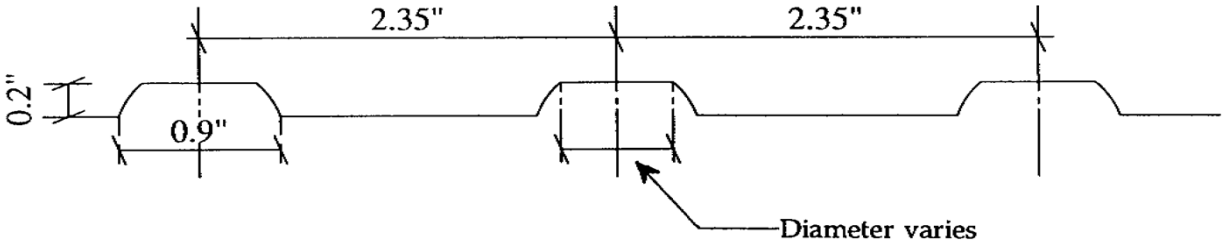

Detectable Warning: Section
NTS

SURVEY FORM 5: DRINKING FOUNTAINS

N/A ☐

Section	Item	Technical Requirements	Comments	Yes	No	N/A
4.1.3(10)(a) 4.15.1	Water Fountains:	Where there is only one drinking fountain on a floor, is there one accessible to wheelchair users in accordance with 4.15 (see below) and one accessible to persons who have difficulty bending or stooping (e.g., drinking fountains mounted at standard height or a water cooler)?		☐	☐	☐
4.1.3(10)(b) 4.15.1		Where there is more than one drinking fountain on a floor, do 50% comply with 4.15 (See below)?		☐	☐	☐
4.1.3(10)	Accessible Route:	Is the accessible drinking fountain on an accessible route?		☐	☐	☐
4.15.5(2)	Clearance - Fountains Without Knee Space:	If the unit is free-standing or built-in and does not have a clear space underneath it, does it have a clear floor space alongside it at least 30 by 48 inches which allows a wheelchair user to make a parallel approach? (See Figures 27(c) and (d))		☐	☐	☐
4.15.5(1)	Fountains With Knee Space:	If the unit is wall- or post-mounted, is there a clear knee space between the bottom of the apron and the floor which is at least 27 inches high, 30 inches wide, and 17 to 19 inches deep? (See Figures 27(a) and (b))		☐	☐	☐
		Does such a unit also have a clear floor space at least 30 by 48 inches perpendicular to the unit allowing a forward approach?		☐	☐	☐
4.4.1	Protruding Objects:	If a wall mounted drinking fountain has a leading edge between 27 and 80 inches from the floor, does it project less than 4 inches into the pathway? (Wall mounted fountains with leading edges at or below 27 inches may project any amount so long as the required clear width of an accessible route is not reduced).		☐	☐	☐
4.15.2	Spout - Height:	Is the spout outlet no higher than 36 inches from the floor?		☐	☐	☐
4.15.3	Location	Is the spout at the front of the unit, with a water flow trajectory parallel or nearly parallel to the front edge?		☐	☐	☐
	Water Flow	If the fountain has a round or oval bowl, is the water flow within 3 inches of the front edge of the fountain?		☐	☐	☐
		Is the water flow at least 4 inches high to allow the insertion of a cup under the flow?		☐	☐	☐
4.15.4	Controls - Location:	Are the controls located on the front or the side near the front edge?		☐	☐	☐
4.15.4 4.27.4	Operation:	Are the controls operable with one hand?		☐	☐	☐
		Are the controls operable without tight grasping, pinching, or twisting of the wrist?		☐	☐	☐
		Is the force to operate the controls no greater than 5 lbf?		☐	☐	☐

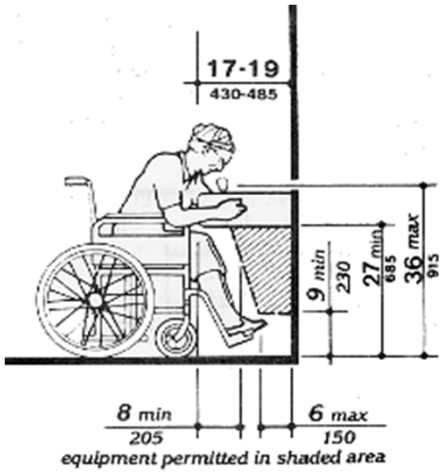

Figure 27a

Drinking Fountains and Water Coolers - Spout Height and Knee Clearance

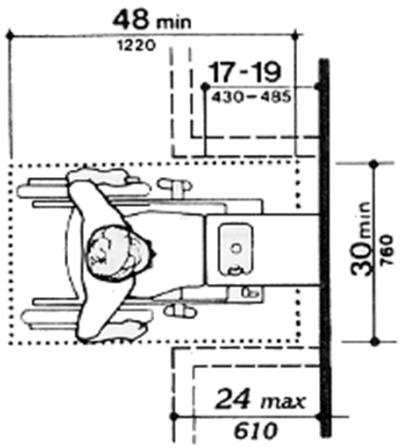

Figure 27b

Drinking Fountains and Water Coolers - Clear Floor Space

In addition to clearances discussed in the text, the following knee clearance is required underneath the fountain: 8 inches (205 mm) minimum measured from the front edge underneath the fountain back towards the wall, and a 9 inch (230 mm) minimum high toe space, measured a maximum 6 inches (150 mm) from the wall. (4.15.2, 4.15.5)

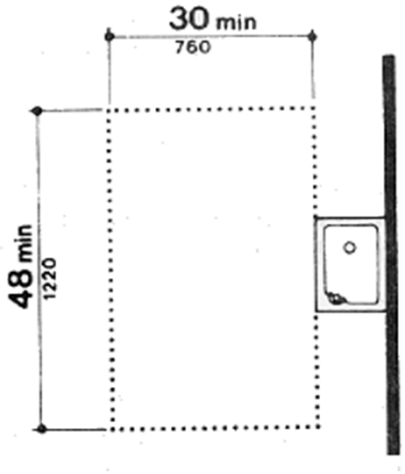

Figure 27c

Drinking Fountains and Water Coolers - Free-Standing Fountain or Cooler

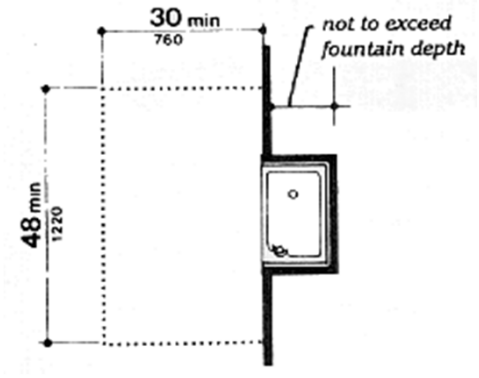

Figure 27d

Drinking Fountains and Water Coolers - Built-In Fountain or Cooler

SURVEY FORM 6: TELEPHONES

N/A ☐

Section	Item	Technical Requirements	Comments	Yes	No	N/A
4.1.3(17)(a) 4.31.1	Telephones:	At each bank of public pay telephones, is there at least one telephone per bank accessible to wheelchair users complying with 4.31.2 through 4.31.8 (See below)? If there is only one public pay telephone per floor, does it comply with 4.31.2 through 4.31.8? (Raised and brailled characters and symbols, Contrasting letters/symbols and non-glare background, latch side of door when possible, 60" high at centerline, or adjacent wall when no room on latch side exists, may be approached without standing in front of door) See 4.30.7		☐	☐	☐
		Where two or more banks of public pay telephones are provided on a floor, does at least one telephone per floor provide for a forward reach complying with 4.2.5 (See below)? (For exterior installations only, if dial tone first service is available, a side reach telephone may be installed instead of a forward reach telephone.)		☐	☐	☐
4.1.17(a) 4.31.2 4.2.4	Clear Floor Space:	Does the accessible telephone have at least 30 by 48 inches clear floor space that allows either a forward or parallel approach by wheelchair users? (Where two or more banks of public telephones are provided on a floor, at least one telephone per floor must allow a forward approach and be mounted so the highest operable part is no higher than 48 inches.)		☐	☐	☐
	Accessible Route:	Is there an accessible route at least 36 inches wide adjoining or overlapping the clear floor space?		☐	☐	☐
4.31.3 4.2.5	Forward Reach Telephone:	If the clear floor space allows only a forward approach, is the highest operable part of the telephone no more than 48 inches from the floor?		☐	☐	☐
4.31.3 4.2.6	Side Reach Telephone:	If the clear floor space allows only a parallel approach, is the highest operable part of the telephone no more than 54 inches from the floor?		☐	☐	☐
4.31.7	Directories:	Are telephone books also within these reach ranges?		☐	☐	☐
4.31.6	Controls:	Does the telephone have pushbutton controls unless such service is unavailable?		☐	☐	☐
4.31.8	Cord:	Is the cord from the telephone to the handset at least 29 inches long?		☐	☐	☐
4.1.3(17)(b)	Volume Controls	Is each accessible telephone equipped with a volume control?		☐	☐	☐

4.1.3(17)(b)	Volume Controls	Are 25% of all other public telephones equipped with volume controls and dispersed among all types of public telephones? (Public telephones include public pay telephones and public closed-circuit telephones.)		☐	☐	☐
4.30.7(2)	Signs:	Are volume controlled telephones identified by a sign showing a handset with radiating sound waves?		☐	☐	☐
4.31.5	Amplification:	Are volume controls capable of amplification between 12 dbA and 18 dbA above normal? (If an automatic reset button is provided, the maximum of 18 dbA may be exceeded.)		☐	☐	☐
	Hearing Aid Compatible:	Are telephones hearing aid compatible?		☐	☐	☐
4.1.3(17)(c)	Text Telephones/ TDDs - General:	If there are 4 or more public pay telephones (with at least one in an interior location), is there at least one interior public text telephone?		☐	☐	☐
	Specific Facilities:	If an interior public pay telephone is provided in a stadium or arena, convention center, a hotel with a convention center, or a covered mall, is there at least one interior public text telephone in the facility?		☐	☐	☐
	Hospitals:	If there is a public pay telephone in or adjacent to a hospital emergency room, a hospital recovery room, or a hospital waiting room, is there a public text telephone in each such location?		☐	☐	☐
4.31.9(3)	Equivalent Facilitation:	If a required text telephone is not provided, is equivalent facilitation provided? (e.g., A portable text telephone may be made available in a hotel at the registration desk if it is available on a 24-hour basis for use with nearby public pay telephones. In this instance, at least one public pay telephone must have a shelf and outlet complying with 4.31.9(2) (see below) to accommodate a portable text telephone. In addition, if an acoustic coupler is used, the telephone handset cord must be sufficiently long so as to allow connection of the text telephone and the telephone receiver. Directional signage must be provided in compliance with 4.30.7.) (See below)		☐	☐	☐
4.31.9	Mounting Location:	Is a required text telephone permanently mounted within, or adjacent to, the telephone enclosure?		☐	☐	☐
	Cord Length:	If an acoustic coupler is used, is the telephone cord sufficiently long enough to allow connection of the text telephone to the telephone receiver?		☐	☐	☐
4.30.7(3)	TDD Symbol:	Are required text telephones identified by the international TDD symbol?		☐	☐	☐
4.1.3(16) 4.30.1 4.30.7	Directional Signs:	Is the directional signage complying with 4.30.2, 4.30.3, and 4.30.5 provided to indicate the location of the text telephone? (Use Form 19: Signage)		☐	☐	☐

4.1.3(16) 4.30.1 4.30.7	Directional Signs:	Is the directional signage placed adjacent to all telephone banks which do not contain a text telephone?		☐	☐	☐
		(If the facility does not have any telephone banks, the directional signage must be provided at the entrance (e.g., in a building directory.)		☐	☐	☐
4.1.3(17)(d) 4.31.9(2)	Text Telephone, Shelves & Outlets:	If there are 3 or more telephones in an interior bank of telephones, does at least one telephone have a shelf and electrical outlet for use with a portable text telephone?		☐	☐	☐
		Is the shelf large enough to accommodate a text telephone and does it provide at least 6 inches of vertical clearance?		☐	☐	☐
		Is the telephone handset capable of being placed flush on the surface of the shelf?		☐	☐	☐
		Is the directional signage placed adjacent to all telephone banks which do not contain a text telephone?		☐	☐	☐
4.1.3(17)(d) 4.31.9(2)	Text Telephone, Shelves & Outlets:	(If the facility does not have any telephone banks, the directional signage must be provided at the entrance (e.g., in a building directory.))		☐	☐	☐
4.31.4 4.4.1	Protruding Objects:	If a wall-mounted telephone has leading edges between 27 and 80 inches from the floor, does it project less than 4 inches into the pathway? (Wall mounted telephones or their enclosures with leading edges at or below 27 inches may project any amount so long as the required clear width of an accessible route is not reduced.)		☐	☐	☐
		If a telephone is mounted on a post with leading edges between 27 and 80 inches high, does it project less than 12 inches into a perpendicular route of travel?		☐	☐	☐
		Is there an accessible route at least 36 inches wide alongside the telephone?		☐	☐	☐

SURVEY FORM 7: RAMPS

N/A ☐

Section	Item	Technical Requirements	Comments	Yes	No	N/A
4.8.1	Ramps:	Does each part of an accessible route with a slope greater than 1:20 comply with 4.8 (See below)? (For curb ramps use Form 4: Curb Ramps)		☐	☐	☐
4.8.2	Running Slope:	Is the ramp slope 1:12 or less?		☐	☐	☐
	Maximum Rise:	Is the rise for any run a maximum of 30 inches?		☐	☐	☐
4.8.6	Cross Slope:	Is the cross slope of the ramp surface no greater than 1:50?		☐	☐	☐
4.8.6; 4.5	Surface:	Is the ramp surface stable, firm and slip-resistant?		☐	☐	☐
	Grates:	Is the smaller dimension of grate openings no more than 1/2 inch, and are long dimensions of rectangular gaps placed perpendicular to the usual direction of travel?		☐	☐	☐
4.8.3	Clear Width:	Is the clear width (between handrails) of the ramp at least 36 inches? 4.8.4LandingsIs		☐	☐	☐
	Size:	Is each landing at least as wide as the ramp and at least 60 inches long?		☐	☐	☐
		Where the ramp changes direction, is there a landing of at least 60 by 60 inches?		☐	☐	☐
	Landings with Doors:	If a doorway is located on a landing, does the area in front of the door comply with the maneuvering space requirements for doors? (Use Form 11: Doors and Gates)		☐	☐	☐
4.8.7	Edge Protection:	If a ramp or landing has a drop off, does it have a minimum 2 inch curb, a wall, railings, or projecting surfaces which prevent people from falling off?		☐	☐	☐
4.8.8	Drainage:	Are outside ramps and their approaches designed so that water will not accumulate on walking surfaces?		☐	☐	☐
4.8.5	Handrails:	If the ramp rises more than 6 inches or is longer than 72 inches, does it have a handrail on each side? (Handrails are not required on curb ramps or adjacent to seating in assembly areas.)		☐	☐	☐
		On dogleg or switchback ramps, is the inside handrail continuous?		☐	☐	☐
	Gripping Surface:	Are the gripping surfaces continuous?		☐	☐	☐
	Mounting:	Are handrails fixed so that they do not rotate within their fittings?		☐	☐	☐
	Height:	Is the top of the handrail between 34 and 38 inches above the ramp surface?		☐	☐	☐
	Handrail Extension:	At ends of handrails, are there at least 12 inches of handrail, parallel to the floor or ground surface, extending beyond the top and bottom of the ramp segment?		☐	☐	☐

4.8.5	Ends of Handrails:	Are the ends of handrails rounded or returned smoothly to the floor, wall, or post?		☐	☐	☐
4.8.5 4.26.2		Diameter: Is the diameter of the handrail between 1-1/4 and 1-1/2 inches? OR Does the shape provide an equivalent gripping surface? Note: Standard pipe sizes designated by the industry as 1-1/4 to 1-1/2 inches are acceptable for purposes of this		☐	☐	☐
4.8.5 4.26.2	Clearance:	Is the clear space between handrails and walls exactly 1-1/2 inches?		☐	☐	☐
4.8.5 4.26.2	Clearance in Recess:	If a handrail is located in a recess, is the recess no more than 3 inches deep extending at least 18 inches above the top of the rail?		☐	☐	☐
4.8.5; 4.26.3	Structural Strength:	Do the handrails meet the structural strength requirements for bending stress and shear stress? (See 4.26.3)		☐	☐	☐
4.8.5 4.26.3		Do the fasteners meet the structural strength requirements for shear force and tensile force? (See 4.26.3)		☐	☐	☐
4.8.5 4.26.4	Hazards:	Are handrail edges free of sharp or abrasive elements and do they have edges with a minimum radius of 1/8 inch?		☐	☐	☐

SURVEY FORM 8: STAIRS

N/A ☐

Section	Item	Technical Requirements	Comments	Yes	No	N/A
4.1.3(4) 4.9.1	Stairs:	Do interior and exterior stairs connecting levels that are not connected by an elevator, ramp, or other accessible means of vertical access comply with 4.9 (See below)? (In new construction, this condition may occur in facilities subject to the elevator exemption (see 4.1.3(5) Exception 1) or where mezzanines are exempt in restaurants (See 5.4).)		☐	☐	☐
4.9.2	Risers/ Treads:	In any one flight of stairs, do all the steps have uniform riser heights and tread widths?		☐	☐	☐
		Are the risers closed? (No open space between risers)		☐	☐	☐
		Are the treads at least 11 inches measured from riser to riser?		☐	☐	☐
4.9.3	Nosings:	Do the nosings project no more than 1-1/2 inches? (front edge of step)		☐	☐	☐
		If nosings do project, do the risers slope toward the nosings or are nosings angled not less than 60 degrees from horizontal to prevent tripping in an ascending direction?		☐	☐	☐
		Is the radius of the curvature at the leading edge of the tread no more than 1/2 inch?		☐	☐	☐
4.9.4 4.26	Handrails:	Do stairways have continuous handrails along both sides?		☐	☐	☐
4.9.4(1)		On dogleg or switchback stairs, is the inside handrail continuous at landings?		☐	☐	☐
4.9.4(2)		At ends of handrails, is there at least 12 inches of handrail parallel to the floor beyond the **top** riser?		☐	☐	☐
4.9.4(2)		At ends of handrails, is there at least one tread width of sloping handrail plus at least 12 inches of horizontal handrail beyond the **bottom** riser?		☐	☐	☐
4.9.4(2)		If the handrail extension protrudes into an accessible route, is the handrail extension rounded to be 27 inches or less from the floor in compliance with 4.4?		☐	☐	☐
4.9.4(3)		Is the clearance between walls and handrails exactly 1-1/2 inches?		☐	☐	☐
4.9.4(4)		Is the gripping surface uninterrupted by newel posts or other obstructions?		☐	☐	☐
4.9.4(5)		Are the tops of handrails between 34 and 38 inches above the stair nosings?		☐	☐	☐
4.9.4(6)		Are the ends of handrails rounded or returned smoothly to the floor, wall or post?		☐	☐	☐

4.9.4(7)	Handrails:	Are handrails fixed so that they do not rotate within their fittings?		☐	☐	☐
4.9.4 4.26.2		Is the outside diameter of the handrail between 1-1/4 inches and 1-1/2 inches? OR Does the shape provide an equivalent Note: Standard pipe sizes designated by the industry 1-1/4 to as 1-1/2 inches are acceptable for purposes of this section.		☐	☐	☐
4.9.4 4.26.2	Clearance in Recess:	If a handrail is located in a recess, is the recess no more than 3 inches deep extending at least 18 inches above the top of the rail?		☐	☐	☐
4.9.4; 4.26.3	Structural Strength:	Do the handrails meet the structural strength requirements for bending stress and shear stress? (See 4.26.3)		☐	☐	☐
4.9.4 4.26.3		Do the fasteners meet the structural strength requirements for shear force and tensile force? (See 4.26.3)		☐	☐	☐
4.9.4 4.26.4	Hazards:	Are handrail edges free of sharp or abrasive elements and do they have edges with a minimum radius of 1/8 inch?		☐	☐	☐
4.9.6	Drainage:	Are outdoor stairs and their approaches designed so that water does not accumulate on walking surfaces?		☐	☐	☐

SURVEY FORM 9: PLATFORM LIFTS

N/A ☐

Lift Location: _____

Section	Item	Technical Requirements	Comments	Yes	No	N/A
4.1.3(5) Exception 4	Lifts:	In new construction, if a lift is installed in lieu of an elevator or ramp, was it installed consistent with 4.1.3(5) Exception 4 (above) and in compliance with applicable State and local codes?		☐	☐	☐
4.11.3	Independent Use:	Can the lift be entered, operated and exited without assistance?		☐	☐	☐
4.11.2 4.2.4	Platform Size:	Is the lift platform at least 30 by 48 inches?		☐	☐	☐
4.11.2 4.2.4	Clear Space Outside Lift:	Is there at least a 30 by 48 inch clear space outside the lift positioned for a wheelchair user to reach the controls from a parallel or forward approach and to enter the lift?		☐	☐	☐
4.11.2 4.27.3 4.2.5	Controls - Forward Reach:	Where a forward reach is provided, is the height of the lift control no more than 48 inches?		☐	☐	☐
4.11.2 4.27.3 4.2.6	Side Reach:	Where a side reach is provided, is the height of the lift control no more than 54 inches?		☐	☐	☐
4.11.2 4.27.4	Operation:	Are the controls operable with one hand and without tight grasping, pinching, or twisting of the wrist?		☐	☐	☐
		Is the force required to operate the controls no greater than 5 lbf?		☐	☐	☐
4.1.2(1) 4.3.2	Accessible Route:	Is the lift on an accessible route?		☐	☐	☐
4.11.2 4.3.6 4.5.1	Surface:	Is the surface of the lift, as well as the accessible route to which it connects, stable,		☐	☐	☐
4.11.2 4.5.2	Edge Bevel:	If there is a change in level of between 1/4 and 1/2 inch, is the edge beveled with a slope of 1:2 or less?		☐	☐	☐
4.11.2	Safety Code:	Does the lift meet the ASME A17.1 Safety Code for Elevators and Escalators, Section XX, 1990?		☐	☐	☐

SURVEY FORM 10: ENTRANCES AND EXITS (AREAS OF RESCUE ASSISTANCE)

N/A ☐

Section	Item	Technical Requirements	Comments	Yes	No	N/A
4.1.3(8)(a)	Entrances - Number Accessible:	Are at least 50% of all public entrances accessible?		☐	☐	☐
	Ground Floor Entrance:	Is at least one accessible entrance on the ground floor?		☐	☐	☐
	Separate Tenant Entrances:	Does each separate tenancy have an accessible entrance?		☐	☐	☐
	Equivalent to Required Exits:	Is the number of accessible entrances at least equivalent to the number of exits required by the applicable building/fire codes? (Use Minimum Requirements Summary Sheet C: Entrances) (This does not require an increase in the total number of entrances planned for the facility.)		☐	☐	☐
	Primary Entrance:	Where feasible, are the accessible entrances the entrances used by the majority of the people visiting or working in the building?		☐	☐	☐
4.1.3(8)(b)	Pedestrian Tunnels and Elevated Walkways:	If access is provided for pedestrians through a pedestrian tunnel or elevated walkway, is one entrance to the building from each tunnel or walkway accessible?		☐	☐	☐
	Direct Entrance From Parking Garage:	If direct access is provided for pedestrians from an enclosed parking garage to the building, is at least one direct entrance from the garage to the building accessible?		☐	☐	☐
4.1.3(8)(c) 4.14.2		Public Entrance: If the only entrance is a service entrance, is it accessible?		☐	☐	☐
4.1.2(7) 4.30.1	Directional Signs:	If an entrance is not accessible, are there directional signs indicating the location of the nearest accessible entrance?		☐	☐	☐
		Do the directional signs comply with 4.30.2, 4.30.3, and 4.30.5? (Use Form 19: Signage)		☐	☐	☐
4.14.1 4.3.2(1) 4.3	Accessible Route:	Within the boundaries of the site, is the accessible entrance connected by an accessible route to existing public transportation stops, accessible parking and passenger loading zones, and to public streets or sidewalks? (Use Form 3: Exterior Accessible Routes)		☐	☐	☐
		Is the accessible entrance connected by an accessible route to all accessible elements or spaces within the building or facility? (Use Form 12: Building Lobbies and Corridors)		☐	☐	☐

4.14.1 4.3.8	Level Change:	If there is a vertical level change between 1/4 inch and 1/2 inch at or along the route to the entrance, is the edge beveled with a slope of 1:2 or less?		☐	☐	☐
		If there is a vertical level change greater than 1/2 inch at the entrance, is a curb ramp, ramp, or elevator complying with 4.7, 4.8, or 4.10 provided? (Use Form 4: Curb Ramps; Form 7: Ramps; or Form 13: Elevators) (Lifts may be used in certain limited situations in new construction. See Minimum Requirements Summary Sheet D and ADAAG 4.1.3(5) Exception 4)		☐	☐	☐
4.1.3(7)(a) 4.13.1	Doors:	At each accessible entrance to a building or facility, is there at least one accessible door meeting the requirements of 4.13? (Use Form 11: Doors and Gates)		☐	☐	☐
4.13.2	Turnstiles:	If turnstiles or revolving doors are used on an accessible route, is there an accessible gate or door provided adjacent to the turnstile or revolving door to facilitate the same use pattern?		☐	☐	☐
4.13.3	Gates:	Do all gates, including ticket gates, comply with the applicable specifications of 4.13? (Use Form 11: Doors and Gates)		☐	☐	☐
4.1.3(9)	Exits and Areas of Rescue Assistance:	Does each occupiable level of a building or facility which is required to be accessible have accessible means of egress equal to the number of exits required by local building/life safety regulations? OR Where a required exit is not accessible, are there areas of rescue assistance complying with 4.3.11 (see below) equal to the number of inaccessible required exits? OR Is there a horizontal exit complying with local building/life safety regulations provided in lieu of an area of rescue assistance? OR Does the building or facility have a supervised automatic sprinkler system?		☐	☐	☐
4.1.3(16) 4.30.1	Exit Door Signs:	Do signs which designate exit doors comply with 4.30.4, 4.30.5, and 4.30.6? (Use Form 19: Signage)		☐	☐	☐

4.3.11.1	Location and Construction of Areas of Rescue Assistance:	Are each of the required areas of rescue assistance located and constructed in compliance with one of the following: A portion of a stairway landing in a smokeproof enclosure complying with local building requirements? A portion of an exterior exit balcony, complying with local requirements, immediately adjacent to an exit stairway? Openings to the interior of the building located within 20 feet of the area of rescue assistance must have fire assemblies with 3/4 hour fire protection rating. A portion of a one-hour fire-resistive corridor, complying with local requirements for fire-resistive construction and for openings, immediately adjacent to an exit enclosure? A vestibule immediately adjacent to an exit enclosure constructed to the same fire-resistive standards required for corridors and openings? A portion of a stairway landing within an exit enclosure which is vented to the exterior and is separated from the interior of the building with not less than a one hour fire resistive doors? When approved by local authorities, an area or room separated by a smoke barrier from other portions of the building, and which has an exit directly into an exit enclosure, where smoke barriers completely enclose the area or room and have a fire resistive rating of not less than one hour? Doors in the smoke barrier must be tight-fitting smoke-and draft-control assemblies with a fire rating of not less than 20 minutes, and must also be self-closing or automatic closing. Where the room or area exits into an exit enclosure which is required to be of more than one hour fire-resistive construction, the room or area must have the same fire-resistive construction, including the same opening protection, as required for the adjacent exit enclosure.		☐	☐	☐

4.3.11.1	Exits and Areas of Rescue Assistance:	An elevator lobby when elevator shafts and adjacent lobbies are pressurized as required for a smokeproof enclosure by local regulations and when complying with the requirements in 4.3.11 (see below) for size, communication, and signage? The pressurization system must be activated by smoke detectors on each floor and the pressurization system and its duct work must be separated from other portions of the building by a minimum two hour fire resistive construction		☐	☐	☐
4.3.11.2	Wheelchair Spaces in Areas of Rescue Assistance - Size:	Does each area of rescue assistance provide at least 2 spaces no less than 30 by 48 inches which do not encroach on any required exit width?		☐	☐	☐
	Required Number of Wheelchair Spaces:	Is the total number of wheelchair spaces per story at least equal to one for every 200 persons of calculated occupant load served by the area of rescue assistance? **EXCEPTION: The appropriate local authority may reduce the minimum number of such spaces to one for each area of rescue assistance on floors where the occupant load is less than 200.**		☐	☐	☐
4.3.11.3	Stairway Width:	Is each stairway serving an area of rescue assistance at least 48 inches wide between handrails?		☐	☐	☐
4.3.11.4	Two-Way Communication:	Is there a method of two-way communication (using both visible and audible signals) between each area of rescue assistance and the primary entry? (The fire department or other local authority may approve a location other than a primary entry.)		☐	☐	☐
4.3.11.5	Instructions for Use:	Are there instructions for the use of the area of rescue assistance during an emergency posted adjacent to the communication system?		☐	☐	☐
4.3.11.5	Identification Signs:	Is each area of rescue assistance identified by a sign which states "Area of Rescue Assistance," and which also displays the International Symbol of Accessibility?		☐	☐	☐
4.3.11.5		Is the sign illuminated when/where exit signs are required to be illuminated?		☐	☐	☐
4.3.11.5	Directional Signs:	Is there directional signage posted at all inaccessible exits indicating the direction to areas of rescue assistance?		☐	☐	☐
4.1.3(16) 4.30.1		Does the directional signage comply with 4.30.2, 4.30.3, and 4.30.5? (Use Form 19: Signage)		☐	☐	☐
4.3.10	Accessible Routes:	Do accessible routes also serve as a means of egress or connect to areas of rescue assistance?		☐	☐	☐
4.1.3(7)(d)	Doors:	Is each door along a means of egress an accessible door meeting the requirements of 4.13? (Use Form 11: Doors and Gates)		☐	☐	☐

SURVEY FORM 11: DOORS AND GATES

N/A ☐

Section	Item	Technical Requirements	Comments	Yes	No	N/A
4.1.3(7) 4.13.1	Doors - Accessible Entrances:	Is there at least one accessible door complying with 4.13 (see below) at each accessible entrance to the building or facility?		☐	☐	☐
	Accessible Spaces:	Is there at least one accessible door complying with 4.13 (see below) at each accessible space in the facility?		☐	☐	☐
	Accessible Routes:	Does each door that is an element of an accessible route comply with 4.13 (See below)?		☐	☐	☐
	Egress Door and Areas of Rescue Assistance:	Does each door that is an element of an accessible means of egress or that connects to an area of rescue assistance comply with 4.13 (See below)?		☐	☐	☐
4.13.2	Revolving Doors and Turnstiles:	If a revolving door or turnstile is used on an accessible route, is an accessible door or gate provided adjacent to the turnstile or revolving door to facilitate the same use		☐	☐	☐
4.13.3	Gates:	Do gates, including ticket gates, meet the applicable specifications of 4.13 (See below)?		☐	☐	☐
4.13.5	Clear Opening:	When a door is open 90 degrees, is there a clear opening width at least 32 inches measured between the face of the door and the door stop on the latch side?		☐	☐	☐
	Closets:	If the door does not require full-user passage, such as that to a shallow closet, is the clear opening width at least 20 inches?		☐	☐	☐
4.13.4	Double Leaf Doors:	If the doorway has two independently operated door leaves, does at least one active leaf provide at least a 32 inch clear opening		☐	☐	☐
4.13.6	Maneuvering Space:	If the door is not automatic or power assisted, does it have maneuvering space relative to the direction of approach as shown in Figure 25? **EXCEPTION: Entry doors to acute care hospital bedrooms are exempt from the requirement for the 18 inch space at the latch side of the door if the door is at least 44 inches wide.** Is the floor level and clear within the required maneuvering space?		☐	☐	☐
4.13.7	Vestibules - Doors in Series:	If there are two doors in a series, is the clear space between doors in a vestibule at least 48 inches plus the width of any door swinging into the space? (See Figure 26) Do doors in a series swing in the same direction? OR Do they swing away from the space between the doors?		☐	☐	☐

4.13.8	Thresholds:	Is the threshold at doorways no higher than 3/4 inch in height for exterior sliding doors? Is the threshold no higher than 1/2 inch for other doors? If there is a raised threshold, is it beveled at 1:2 or less?		☐	☐	☐
4.13.9	Hardware:	Are all handles, locks, and latches or other operative devices operable with one hand?		☐	☐	☐
4.13.9	Hardware:	Are they operable without tight grasping, pinching, or twisting of the wrist? (U-shaped handles, levers, and push type mechanisms are acceptable designs.)		☐	☐	☐
		If there are sliding doors, is the operating hardware exposed and usable from both sides when the doors are fully open?		☐	☐	☐
4.13.9	Hardware:			☐	☐	☐
		Is the operating hardware mounted no higher than 48 inches above the floor?		☐	☐	☐
4.13.10	Door Closers:	If the door has a closer, is the closer adjusted so that from an open position of 70 degrees, the door will take at least 3 seconds to move to a point 3 inches from the latch (measured to the leading edge of the door)?		☐	☐	☐
4.13.11	Opening Force - Fire Doors:	Do fire doors have the minimum opening force allowable by the appropriate local authority?		☐	☐	☐
	Interior Doors:	Do interior hinged doors, and sliding or folding doors, have an opening force of 5 lbf or less?		☐	☐	☐
4.13.12	Automatic Doors:	If an automatic door is used, does it comply with ANSI/BHMA A156.10-1985?		☐	☐	☐
	Low Powered Doors:	If there is a slow-opening, low-powered automatic door, does it comply with ANSI A156.19-1984 and does it take at least 3 seconds to open to back check?		☐	☐	☐
4.13.12	Low Powered Doors:	Do such doors require no more than 15 lbf to stop door movement?		☐	☐	☐
	Power Assisted Doors:	If a power assisted door is used, does it have an opening force of 5 lbf or less and does its closing conform to the requirements in ANSI A156.19-1984?		☐	☐	☐

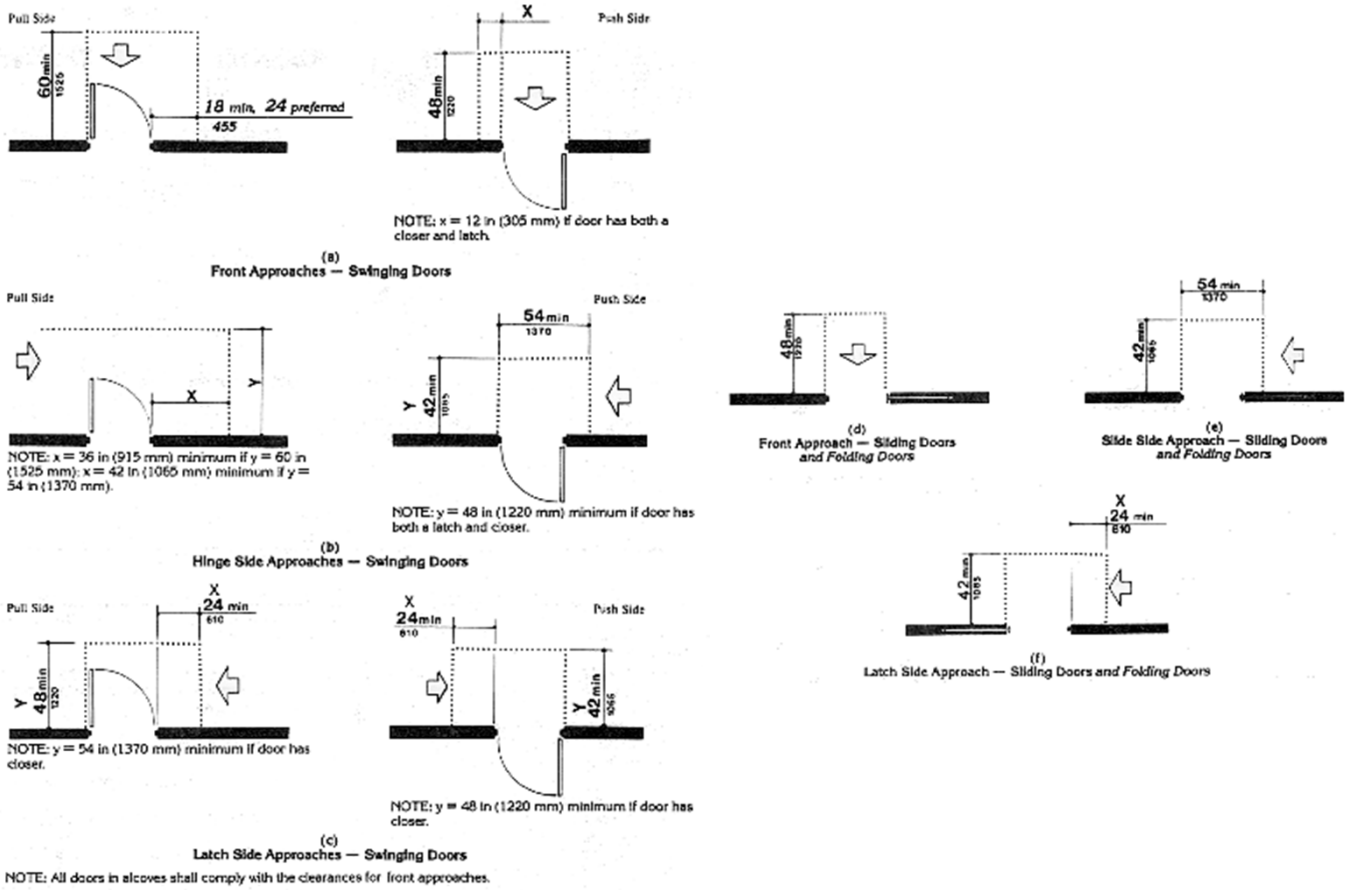

Figure 25*
Maneuvering Clearances at Doors

NOTE: All doors in alcoves shall comply with the clearances for front approaches.

Diagram (a) Front Approaches -- Swinging Doors. Front approaches to pull side of swinging doors shall have maneuvering space that extends 18 in (455 mm) minimum beyond the latch side of the door and 60 in (1525 mm) minimum perpendicular to the doorway.

Front approaches to push side of swinging doors, equipped with both closer and latch, shall have maneuvering space that extends 12 in (305 mm) minimum beyond the latch side of the door and 48 in (1220 mm) minimum perpendicular to the doorway.

Front approaches to push side of swinging doors, not equipped with latch and closer, shall have maneuvering space that is the same width as door opening and extends 48 in (1220 mm) minimum perpendicular to the doorway.

Diagram (b) Hinge Side Approaches. Hinge-side approaches to pull side of swinging doors shall have maneuvering space that extends 36 in (915 mm) minimum beyond the latch side of the door if 60 in (1525 mm) minimum is provided perpendicular to the doorway or maneuvering space that extends 42 in (1065 mm) minimum beyond the latch side of the door shall be provided if 54 in (1370 mm) minimum is provided perpendicular to the doorway.

Hinge-side approaches to push side of swinging doors, not equipped with both latch and closer, shall have a maneuvering space of 54 in (1370 mm) minimum, parallel to the doorway and 42 in (1065 mm) minimum, perpendicular to the doorway.

Hinge side approaches to push side of swinging doors, equipped with both latch and closer, shall have maneuvering space of 54 in (1370 mm) minimum, parallel to the doorway, 48 in (1220 mm) minimum perpendicular to the doorway.

Diagram (c) Latch Side Approaches -- Swinging Doors. Latch-side approaches to pull side of swinging doors, with closers, shall have maneuvering space that extends 24 in (610 mm) minimum beyond the latch side of the door and 54 in (1370 mm) minimum perpendicular to the doorway.

Latch-side approaches to pull side of swinging doors, not equipped with closers, shall have maneuvering space that extends 24 in (610 mm) minimum beyond the latch side of the door and 48 in (1220 mm) minimum perpendicular to the doorway.

Latch-side approaches to push side of swinging doors, with closers, shall have maneuvering space that extends 24 in (610 mm) minimum parallel to the doorway beyond the latch side of the door and 48 in (1220 mm) minimum perpendicular to the doorway.

Latch-side approaches to push side of swinging doors, not equipped with closers, shall have maneuvering space that extends 24 in (610 mm) minimum parallel to the doorway beyond the latch side of the door and 42 in (1065 mm) minimum perpendicular to the doorway.

Diagram (d) Front Approach -- Sliding Doors and Folding Doors. Front approaches to sliding doors and folding doors shall have maneuvering space that is the same width as the door opening and shall extend 48 in (1220 mm) minimum perpendicular to the doorway.

Diagram (e). Slide-side approaches to sliding doors and folding doors shall have a maneuvering space of 54 in (1370 mm) minimum, parallel to the doorway, and 42 in (1065 mm) minimum, perpendicular to the doorway.

Diagram (f) Latch Side Approach -- Sliding Doors and Folding Doors. Latch-side approaches to sliding doors and folding doors shall have a maneuvering space that extends 24 in (610 mm) minimum beyond the latch side of the door and extends 42 in (1065 mm) minimum perpendicular to the doorway.

Depending on the direction of approach, diagrams (a) through (f) illustrate minimum maneuvering space depths and latch side clearances for both push and pull sides of swinging, sliding and folding doors. (4.13.6).

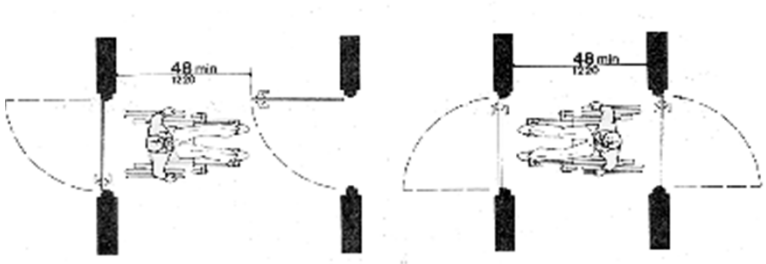

Figure 26
Two Hinged Doors in Series

SURVEY FORM 12: BUILDING LOBBIES AND CORRIDORS (INTERIOR ACCESSIBLE ROUTE)

N/A ☐

Section	Item	Technical Requirements	Comments	Yes	No	N/A
4.1.3(1) 4.3.2(3)	Accessible Route:	Is there an accessible route connecting accessible entrances with all accessible elements and spaces within the building?		☐	☐	☐
4.3.3	Width - General:	Is the accessible route at least 36 inches wide except at doorways?		☐	☐	☐
	U-Turn:	Where the accessible route makes a U-turn around an obstacle which is less than 48 inches wide, does the pathway width increase to at least 42 inches on the approaches and 48 inches in the turn? (See Figure 7(b))		☐	☐	☐
4.3.4	Passing Spaces:	If the accessible route is less than 60 inches wide, are there passing spaces at least 60 inches wide and 60 inches long or intersecting corridors allowing passing at reasonable intervals not exceeding 200 feet?		☐	☐	☐
4.3.5 4.4.1	Provisions for Persons Who are Blind - Protruding Objects:	If objects mounted to the wall have leading edges between 27 and 80 inches from the floor, do they project less than 4 inches into the pathway? (Wall mounted objects with leading edges at or below 27 inches may project any amount so long as the required clear width of an accessible route is not reduced.)		☐	☐	☐
		Do free-standing objects mounted on posts with leading edges between 27 and 80 inches high project less than 12 inches into the perpendicular route of travel?		☐	☐	☐
		Is there an accessible path at least 36 inches clear alongside the protruding object?		☐	☐	☐
4.4.2	Headroom:	Is there at least 80 inches clear head room on an accessible route?		☐	☐	☐
		If there is less than 80 inches clear head room in an area adjoining an accessible route, is there a cane detectable barrier within 27 inches of the floor? (See Figure 8(c-1))		☐	☐	☐
4.5.1	Floor Surface:	Are the floor surfaces on accessible routes stable, firm, and slip-resistant?		☐	☐	☐
4.3.7 4.8.1	Slope:	Is the slope of the accessible route no greater than 1:20? OR Where the slope is greater than 1:20, does it comply with the requirements for ramps? (Use Form 7: Ramps)		☐	☐	☐
4.3.7 4.8.1	Cross Slope:	Is the cross slope no greater than 1:50?		☐	☐	☐
4.3.8 4.5.2	Changes in Level:	Are ramps or elevators used for changes in level greater than 1/2 inch? (Lifts may only be used in certain limited situations in new construction. See Minimum Requirements Summary Sheet D and ADAAG 4.1.3(5) Exception 4.)		☐	☐	☐

4.3.8 4.5.2	Changes in Level:	Does the ramp or elevator comply with 4.8 or 4.10? (Use Form 7: Ramps or Form 13: Elevators)		☐	☐	☐
		When walkway levels change, is the vertical difference less than 1/4 inch? OR Are changes in level between 1/4 inch and 1/2 inch beveled with a slope no greater than 1:2?		☐	☐	☐
		When floor materials change, does the vertical difference between them meet the above requirements?		☐	☐	☐
4.5.3	Carpet:	If carpet or carpet tile is used on the floor, is it securely attached?		☐	☐	☐
		Are exposed edges of carpet fastened to the floor and have trim along their entire length?		☐	☐	☐
4.5.3	Carpet:	Is it a low pile type of carpet (1/2 inch maximum) with a firm pad or no pad underneath it?		☐	☐	☐
4.1.3(7)(e) 4.13	Doors:	Does each door that is an element of an accessible route comply with 4.13? (Use Form 11: Doors and Gates)		☐	☐	☐
4.13.2	Revolving Door:	If a revolving door or turnstile is used on an accessible route, is an accessible door or gate provided adjacent to the revolving door or turnstile to facilitate the same use pattern?		☐	☐	☐
4.13.3	Gates:	Do gates, including ticket gates, meet all the applicable specifications of 4.13? (Use Form 11: Doors and Gates)		☐	☐	☐
4.1.3(16) 4.30.1	Directional and Informational Signs:	Do signs which provide direction to, or information about, functional spaces of the building comply with 4.30.2, 4.30.3, and 4.30.5? (Use Form 19: Signage) **EXCEPTION: Building directories, menus, and all other signs which are temporary are not required to comply.**		☐	☐	☐
4.1.3(16) 4.30.1	Room Identification Signs:	Do signs which identify permanent rooms and spaces comply with 4.30.4, 4.30.5, and 4.30.6? (Use Form 19: Signage)		☐	☐	☐
4.1.3(14) 4.28	Alarms:	If emergency warning systems are provided, do they include both audible alarms and visual alarms complying with 4.28? (Use Form 20: Alarms)		☐	☐	☐

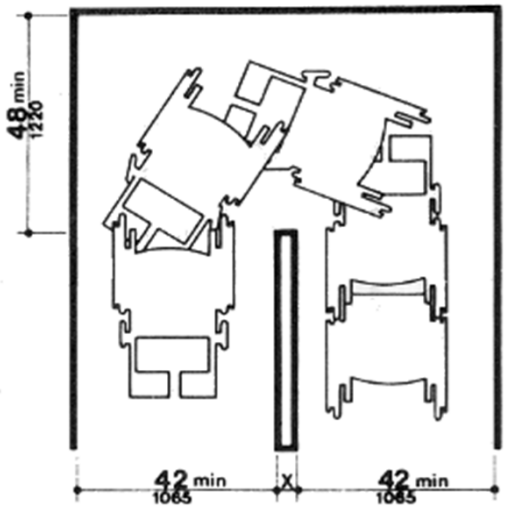

NOTE: Dimensions shown apply when x < 48 in (1220 mm).

Figure 7(b)
Accessible Route
Turns around an
Obstruction

A U-turn around an obstruction less than 48 inches (1220 mm) wide may be made if the passage width is a minimum of 42 inches (1065 mm) and the base of the U-turn space is a minimum of 48 inches (1220 mm) wide.

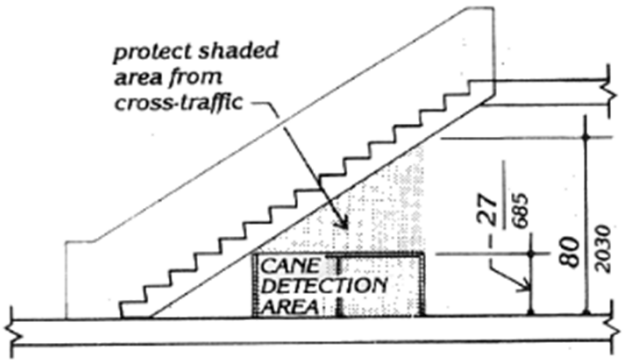

Figure 8c-1
Protruding Objects
Overhead Hazards

Overhead Hazards. As an example, the diagram illustrates a stair whose underside descends across a pathway. Where the headroom is less than 80 inches, protection is offered by a railing (2030 mm) which can be no higher than 27 inches (685 mm) to ensure detectability.

SURVEY FORM 13: ELEVATORS

N/A ☐

Section	Item	Technical Requirements	Comments	Yes	No	N/A
4.1.3(5)	Exception 1 Elevator Exception:	Is the building eligible for the elevator exception in 4.1.3(5) above?		☐	☐	☐
	Eligible Building:	If the building is eligible for the elevator exception, does the floor above or below the accessible ground floor comply with all the other requirements in 4.1.3 for new construction? (See Minimum Requirements Summary Sheets D through G)		☐	☐	☐
		If the building is eligible for the elevator exception and toilet rooms or bathrooms are provided at a level not served by an elevator, are toilet rooms or bathrooms also provided on the accessible floor? (See Minimum Requirements Summary Sheet F: Toilet Rooms and Bathrooms)		☐	☐	☐
		If the building is eligible for the elevator exception but a full passenger elevator is nonetheless planned, does the elevator comply with 4.10 (see below) and serve each level in the building? (A full passenger elevator that provides service from a garage to only one level of a building is not required to serve other levels.)		☐	☐	☐
4.1.3(5) 4.10.1	Ineligible Building:	If the building is not eligible for the elevator exception, does an elevator serve each level, including mezzanines, unless otherwise noted below?		☐	☐	☐
		If more than one elevator is provided in a building not eligible for the elevator exemption, does each full passenger elevator comply with 4.10 (See below)?		☐	☐	☐
		Shopping Center or Shopping Mall: In a facility housing a shopping center or a shopping mall, does an elevator serve each floor level housing (or designed or intended for use by) at least one sales or rental establishment? (See 28 CFR Sections 36.401(d)(1)(ii) and 36.404(a)(2))		☐	☐	☐
	Professional Office of Health Care Provider:	In a facility housing the professional office of a health care provider, does an elevator serve each floor level housing (or designed or intended for use by) at least one health care provider? (See 28 CFR Sections 36.401(d)(1)(i) and 36.404(a)(1))		☐	☐	☐
	Transportation Facility:	In a terminal, depot, or other station used for specified public transportation, or an airport passenger terminal, is each area housing passenger services, including boarding and debarking, loading and unloading, baggage claim, dining facilities, and other common areas open to the public connected by an accessible route from an accessible entrance? (See 28 CFR Section 36.401(d)(1)(iii))		☐	☐	☐
4.10.2	Automatic Operation:	Is the elevator operation automatic?		☐	☐	☐

4.10.2	Self-leveling:	Is the elevator self-leveling and does the floor of the elevator automatically come within 1/2 inch of the floor landing at each stop?		☐	☐	☐
4.10.9	Horizontal Gap:	Is the horizontal gap between the car floor platform and the landing edge no greater than 1-1/4 inches?		☐	☐	☐
4.10.3	Hallway Call Buttons:	Are the hallway call buttons centered at 42 inches above the floor? Are the buttons at least 3/4 inches in the smallest dimension?		☐	☐	☐
	Visual Indicators:	Do the buttons have visual signals to indicate when each call is registered and answered?		☐	☐	☐
4.10.3	Visual Indicators:	Is the button designating the "up" direction above the "down" button?		☐	☐	☐
		Are the buttons raised or flush (not recessed)?		☐	☐	☐
	Clearance:	If there is an object below the buttons, does it project no more than 4 inches into the elevator lobby?		☐	☐	☐
4.10.4	Hall Lanterns:	Is there a visible and audible signal at each hoistway entrance to indicate which car is answering a call?		☐	☐	☐
	Audible Signals:	Do audible signals sound once for "up" and twice for "down," or do they have verbal annunciators that say "up" or "down"?		☐	☐	☐
	Visible Signals:	Are visible signals also provided and are they:		☐	☐	☐
		Mounted so that the centerline is at least 72 inches above the floor;				
		At least 2-1/2 inches in the smallest dimension; and,				
		Visible from the vicinity of the hall call button?				
4.10.5	Raised and Braille Floor Designations:	Does each elevator hoistway entrance have raised floor designations on each door jamb centered 60 inches above the floor?		☐	☐	☐
		Are the floor designation letters or numerals 2 inches high?		☐	☐	☐
4.10.5 4.30.4	Raised Characters:	Are the letters or numerals raised at least 1/32 inch upper case, and sans serif or simple serif type?		☐	☐	☐
	Braille:	Are the letters or numerals accompanied with Grade II Braille?		☐	☐	☐
4.10.6	Doors:	Do the elevator doors open and close automatically?		☐	☐	☐
		Do they re-open automatically without contact if an obstruction passes through the opening between 5 inches and 29 inches above the floor? Does this reopening device remain effective for at least 20 seconds?		☐	☐	☐
4.10.7	Door and Signal Delay:	Is the time from when the elevator's arrival is signaled until the doors begin to close at least 5 seconds?		☐	☐	☐
4.10.7	Door and Signal Delay:	If any hoistway door is farther than 7.5 feet from the hall call button, does the time increase according to Figure 21?		☐	☐	☐

4.10.8		Do the elevator doors remain fully open for at least 3 seconds?		☐	☐	☐
4.10.9	Floor Surfaces:	Does the floor area of the car allow maneuvering room for wheelchair users to enter the car, reach the controls, and exit? (See Figure 22)		☐	☐	☐
4.10.10 4.5		Are the floors in and adjacent to the elevator stable, firm, and slip-resistant?		☐	☐	☐
4.10.11	Illumination Levels:	Is the illumination level at the car controls, the platform, and the car threshold and landing sill at least 5 footcandles?		☐	☐	☐
4.10.12(1)	Car Controls:	Are the car control buttons at least 3/4 inch in their smallest dimension?		☐	☐	☐
		Are the controls raised or flush?		☐	☐	☐
4.10.12(2) 4.30.4	Raised Characters:	Are the controls designated by raised standard alphabet characters, arabic numerals, or standard elevator symbols that are placed immediately to the left of the buttons?		☐	☐	☐
	Character Height:	Are the raised characters and numbers at least 5/8 inch high and raised at least 1/32 inch? Are the raised characters and numbers upper case, and sans serif or simple serif?		☐	☐	☐
4.10.12(2) 4.30.4	Braille:	Do the controls also have Braille designations in Grade II Braille?		☐	☐	☐
		4.10.12(2); 4.30.5 Contrast: Do the numbers and characters contrast with the background (light-on-dark or dark-on-light)?		☐	☐	☐
	Main Entry Designation:	Is the button for the main entry floor designated by a raised star?		☐	☐	☐
4.10.12(2)	Visual Indicators:	Do the floor buttons have visual indicators to show when each call is registered and are they extinguished when each call is answered?		☐	☐	☐
4.10.12(3)	Height of Controls:	Are the floor buttons no higher than 54 inches above the floor for side approach and no higher than 48 inches for front approach?		☐	☐	☐
	Emergency Controls:	Are the emergency controls grouped at the bottom of the panel with centerlines no less than 35 inches above the floor?		☐	☐	☐
	Control Location:	If the cars have side opening doors are the controls located on the side or front wall adjacent to the doors? If the cars have center opening doors, are the controls located on the front wall?		☐	☐	☐
4.10.13	Car Position Indicators:	Is there a visual car position indicator above the car control panel or over the door to indicate the floor level?		☐	☐	☐
4.10.13	Size:	Are the numerals at least 1/2 inch high?		☐	☐	☐

	Visible Signals:	Do the numerals illuminate?		☐	☐	☐
	Audible Signals:	Does an audible signal sound as the car passes or stops at a floor or is there an automatic verbal announcement? Is the audible signal at least 20 decibels and the frequency no higher than 1500 Hz?		☐	☐	☐
4.10.14	Emergency Communications:	If an emergency two-way communication system between the elevator and a point outside the hoistway is provided, does it comply with ASME A17.1-1990?		☐	☐	☐
4.10.14	Height:	Is the highest operable part of the communication system no higher than 48 inches above the floor?		☐	☐	☐
4.10.14 4.30.4	Raised Characters and Braille:	Is the communication system identified by a raised symbol and lettering located adjacent to the device?		☐	☐	☐
		Is the raised symbol and lettering between 5/8 inch and 2 inches high and raised at least 1/32 inch?		☐	☐	☐
		Is the raised lettering upper case, and sans serif or simple serif?		☐	☐	☐
		Is the raised lettering accompanied by Grade II Braille?		☐	☐	☐
4.10.14 4.30.5		Do the symbol and lettering contrast with the background (light-on-dark or dark-on-light)?		☐	☐	☐
		If the system uses a handset, is the length of the cord from the panel to the handset at least 29 inches?		☐	☐	☐
4.10.14 4.30.5	Raised Characters and Braille:	Is the communication system usable without voice communication?		☐	☐	☐
4.10.14 4.27	Controls:	If the communication system is in a closed compartment, is the hardware on the compartment door operable with one hand, and without tight grasping, pinching, or twisting of the wrist?		☐	☐	☐
		Is the force required to operate controls no greater than 5 lbf?		☐	☐	☐

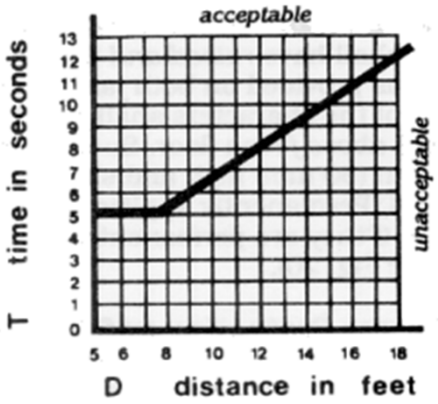

Figure 21
Graph of Timing Equation

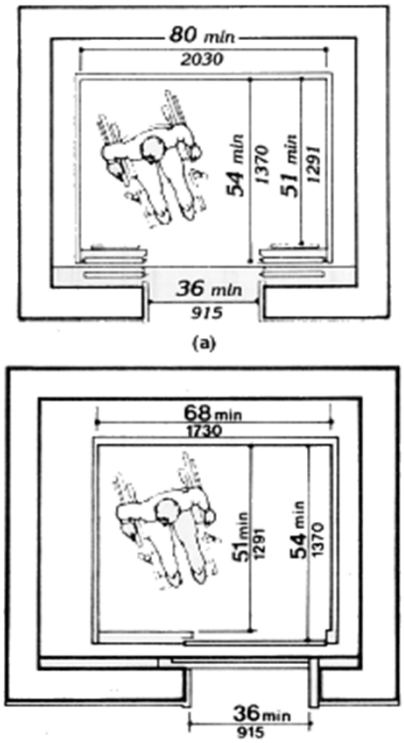

Figure 22

Minimum Dimensions
of Elevator Cars

Diagram (a) illustrates an elevator with a door providing a 36 inch (915 mm) minimum clear width, in the middle of the elevator. The width of the elevator car is a minimum of 80 inches (2030 mm). The depth of the elevator car measured from the back wall to the elevator door is a minimum of 54 inches (1370 mm). The depth of the elevator car measured from the back wall to the control panel is a minimum of 51 inches (1291 mm).

Diagram (b) illustrates an elevator with door providing a minimum 36 inch (915 mm) clear width, located to one side of the elevator. The width of the elevator car is a minimum of 68 inches (1730 mm). The depth of the elevator car measured from the back wall to the elevator door is a minimum of 54 inches (1370 mm). The depth of the elevator car measured from the back wall to the control panel is a minimum of 51 inches (1291).

SURVEY FORM 14: ROOMS AND SPACES

N/A ☐

Section	Item	Technical Requirements	Comments	Yes	No	N/A
4.1.3(7)(b) 4.13.1	Doors:	Do the doors comply with 4.13? (Use Form 11: Doors and Gates)		☐	☐	☐
4.3.3	Aisles:	Are aisles between permanently built-in case work or partitions at least 36 inches wide (or at least 32 inches wide for a length not to exceed 24 inches)? (See Figure 8(e))		☐	☐	☐
		Where the aisle makes a U-turn around an obstacle which is less than 48 inches wide, is the pathway width at least 42 inches on the approach and 48 inches in the turn? (See Figure 7(b))		☐	☐	☐
4.3.4	Passing Space:	If the aisles between permanently built-in casework or partitions are less than 60 inches wide, are there passing spaces at least 60 inches wide and 60 inches long or intersecting aisles allowing passing at reasonable intervals not exceeding 200 feet?		☐	☐	☐
4.3.5 4.4.2	Headroom:	Is there at least 80 inches clear head room in the accessible space?		☐	☐	☐
		If there is less than 80 inches clear head room in part of an accessible space, is there a cane detectable barrier within 27 inches of the floor? (See Figure 8(c-1))		☐	☐	☐
4.4.1	Protruding Objects:	If objects mounted to the wall have leading edges between 27 and 80 inches from the floor, do they project less than 4 inches into the accessible space? (Wall mounted objects with leading edges at or below 27 inches may project any amount so long as they do not reduce the required clear width of an accessible route.)		☐	☐	☐
		Do free-standing objects, mounted on posts with leading edges between 27 and 80 inches high (such as drinking fountains or telephones) project less than 12 inches into the perpendicular route of travel?		☐	☐	☐
		Is there an accessible route at least 36 inches clear alongside the protruding object?		☐	☐	☐
4.5.1	Floors:	Are the floor surfaces in all accessible rooms and spaces stable, firm, and slip-resistant?		☐	☐	☐

4.1.3(5) 4.3.8 4.5.2	Level Changes:	Are ramps or elevators used for any change in level greater than 1/2 inch? (Lifts may only be used in certain limited situations in new construction. See Minimum Requirements Summary Sheet D and ADAAG 4.1.3(5) Exception 4)		☐	☐	☐
		Do the ramps or elevators comply with 4.8 or 4.10? (Use Form 7: Ramps or Form 13: Elevators)		☐	☐	☐
		When walkway levels change, is the vertical difference less than 1/4 inch? OR Are changes in level between 1/4 inch and 1/2 inch beveled with a slope no greater than 1:2?		☐	☐	☐
		When floor materials change, does the vertical difference between them meet the above requirement?		☐	☐	☐
4.5.3	Carpet:	If carpet or carpet tile is used on the floor, is it securely attached?		☐	☐	☐
		Is it a low pile type of carpet (1/2 inch or less) with a firm pad or no pad underneath?		☐	☐	☐
4.1.3(16) 4.30.1	Directional and Informational Signage:	Do signs which provide direction to, or information about, functional spaces of the building comply with 4.30.2, 4.30.3, and 4.30.5? (Use Form 19: Signage)		☐	☐	☐
4.1.3(16) 4.30.1	Room Identification Signage:	Do signs which designate permanent rooms and spaces comply with 4.30.4, 4.30.5, and 4.30.6? (Use Form 19: Signage)		☐	☐	☐
4.1.3(12) 4.25.1	Storage:	Does at least one of each type of fixed or built-in storage facilities (e.g., cabinets, shelves, closets, and drawers) comply with 4.25 (See below)? (Additional storage may be provided outside the dimensions required by 4.25. Accessible reach range requirements do not apply to shelves or display units allowing self-service by customers in mercantile occupancies but they must be located on an accessible route.)		☐	☐	☐
4.25.2 4.2.4	Clear Floor Space:	Is there a clear floor space at least 30 by 48 inches at fixed or built-in storage facilities which allows for either a forward or parallel approach?		☐	☐	☐
4.25.3 4.2.5 4.2.6	Side Reach:	If a parallel approach is provided, are clothes rods and shelves between 9 and 54 inches from the floor?		☐	☐	☐
4.25.3		Where the distance between a wheelchair and clothes rod or shelve is between 10 - 21 inches (e.g., closets without accessible doors) is the accessible shelf no more than 48 inches from the floor and the reach no more than 21 inches? (See Figure 38)		☐	☐	☐
	Forward Reach:	If a front approach is provided, are clothes rods and shelves between 15 and 48 inches from the floor?		☐	☐	☐

4.13.5		Closet Doors: Where passage is not required to access storage, does the door have at least 20 inches clear opening width?		☐	☐	☐
4.25.4 4.27.4	Hardware:	Is the hardware on the storage space doors operable with one hand, and without tight grasping, pinching, or twisting of the wrist?		☐	☐	☐
		Is the force required to activate the hardware less than 5 lbf?		☐	☐	☐
4.1.3(18) 4.32.1	Fixed/Built-in Seating, Tables or Counters:	Do 5% (but not less than one) of fixed or built-in seating, tables, or counters (e.g., study carrels and student laboratory stations) comply with 4.32 (See below)? (For specific requirements for restaurants and cafeterias, use Form 23: Restaurants and Cafeterias.)		☐	☐	☐
4.32.2 4.2.4	Clear Space - Seating:	Do seating spaces which are provided for wheelchair users have a 30 by 48 inch clear space which overlaps an accessible route?		☐	☐	☐
	Knee Space:	Is no more than 19 inches of the 30 by 48 inch clear space measured under the table? (See Figure 45)		☐	☐	☐
4.32.3		Is the knee space at least 27 inches high, 30 inches wide, and 19 inches deep? (See Figure 45)		☐	☐	☐
4.32.4		Is the top of the table or counter between 28 and 34 inches from the floor?		☐	☐	☐
4.3.3	Aisles:	Are the aisles leading up to and between tables at least 36 inches wide?		☐	☐	☐
4.1.3(13) 4.27.1 4.27.2 4.27.3 4.2.5 4.2.6	Controls:	Are light switches, controls, dispensers, and similar devices between 9 and 54 inches from the floor when the clear floor space allows a parallel approach? OR Are they between 15 and 48 inches from the floor when the clear floor space allows only a forward approach?		☐	☐	☐
		Are all electrical and communications receptacles used by building occupants at least 15 inches above the floor?		☐	☐	☐
4.27.4		Are controls operable with one hand, and without tight grasping, pinching, or twisting of the wrist?		☐	☐	☐
		Is the force required to activate controls less than 5 lbf?		☐	☐	☐
4.1.3(14) 4.28.1	Alarms:	Where alarms are provided, do they comply with 4.28? (Use Form 21: Alarms)		☐	☐	☐
4.1.3(10) 4.15.1	Drinking Fountains:	If drinking fountains are located in a room or space, do they comply with 4.15? (Use Form 5: Drinking Fountains)		☐	☐	☐
4.1.3(17) 4.31.1		Public Telephones: If public telephones are located in a room or space, do they comply with 4.31? (Use Form 6: Telephones)		☐	☐	☐

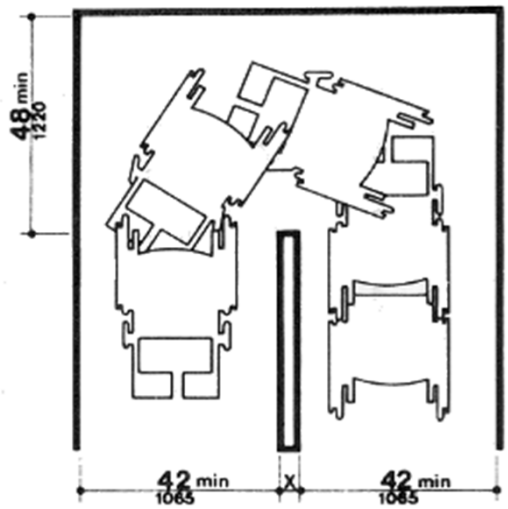

NOTE: Dimensions shown apply when x < 48 in (1220 mm).

Figure 7(b)
Accessible Route
Turns around an Obstruction

A U-turn around an obstruction less than 48 inches (1220 mm) wide may be made if the passage width is a minimum of 42 inches (1065 mm) and the base of the U-turn space is a minimum of 48 inches (1220 mm) wide.

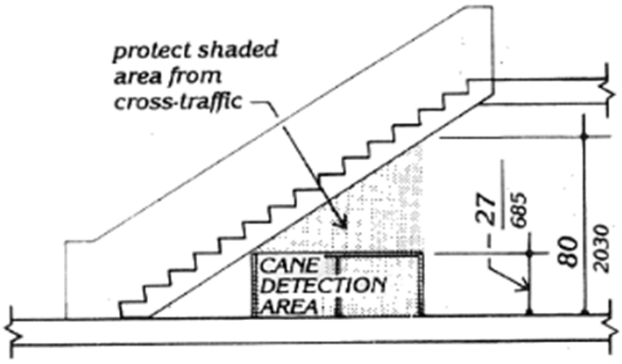

Figure 8c-1
Protruding Objects
Overhead Hazards

Overhead Hazards. As an example, the diagram illustrates a stair whose underside descends across a pathway. Where the headroom is less than 80 inches, protection is offered by a railing (2030 mm) which can be no higher than 27 inches (685 mm) to ensure detectability.

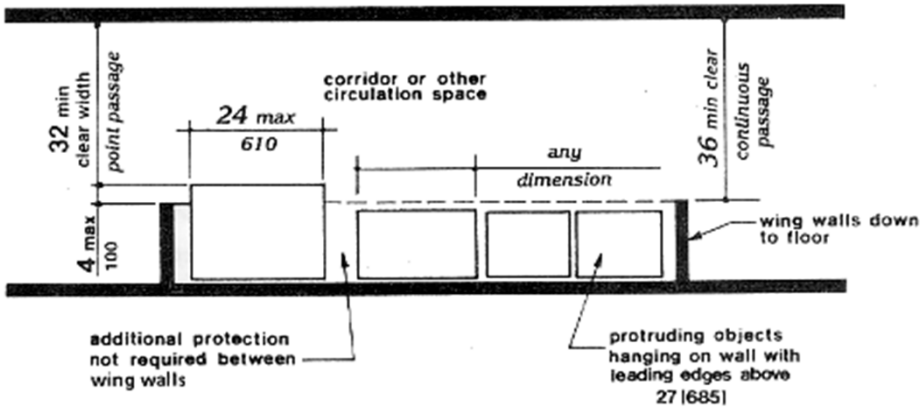

Figure 8e
Protruding Objects
Example of Protection around Wall-Mounted Objects and Measurements of Clear Widths

The minimum clear width for continuous passage is 36 inches. Thirty two (32) inches is the minimum clear width for a maximum distance of 24 inches (610 mm). The maximum distance an object can protrude beyond a wing wall is 4 inches (100 mm).

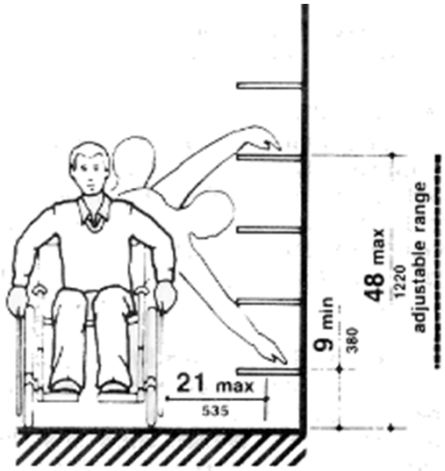

Figure 38a
Storage Shelves and Closets
Shelves

If the clear floor space allows a parallel approach by a person in a wheelchair and the distance between the wheelchair and the shelf exceeds 10 inches, the maximum high side reach shall be 48 inches (1220 mm) above the floor and the low side reach shall be a minimum of 9 inches (230 mm) above the floor. The shelves can be adjustable. The maximum distance from the user to the shelf shall be 21 inches (535 mm).

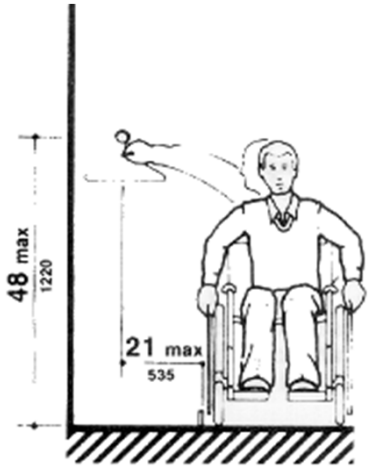

Figure 38b
Storage Shelves and Closets
Closets

If the clear floor space allows a parallel approach by a person in a wheelchair and the distance between the wheelchair and the clothes rod exceeds 10 inches, the maximum high side reach shall be 48 inches (1220 mm). The maximum distance from the user to the clothes rod shall be 21 inches (535 mm).

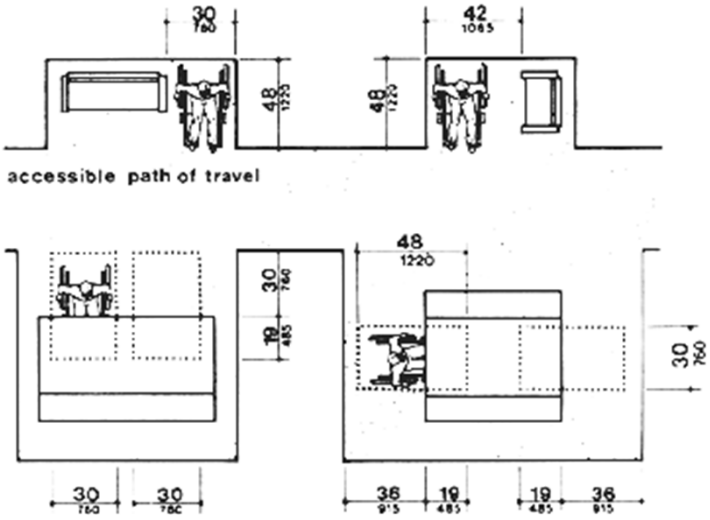

Fig. 45
Minimum Clearances for Seating and Tables

Figure 45
Minimum Clearances for Seats and Tables

SURVEY FORM 15: ASSEMBLY AREAS

N/A ☐

Assembly Room Location:

Capacity of Seating in Assembly Areas:	Number of Required Wheelchair Locations:
4 to 25	1
26 to 50	2
51 to 300	4
301 to 500	6
over 500	6, plus 1 additional space for each total seating capacity increase of 100

Section	Item	Technical Requirements	Comments	Yes	No	N/A
4.1.3(19)(a) 4.33.1	Wheelchair Seating:	In assembly areas with fixed seating, is the required number of wheelchair locations provided (See Table above)?		☐	☐	☐
	Aisle Seating:	In addition, are one percent (but not less than one) of all fixed seats, aisle seats with no armrests on the aisle side, or removable or folding armrests on the aisle side?		☐	☐	☐
	Identification:	Is each such aisle seat identified by a sign or marker?		☐	☐	☐
		Is there a sign posted at the ticket office notifying patrons of such aisle seats?		☐	☐	☐
		Do the wheelchair locations comply with 4.33.2, 4.33.3 and 4.33.4 (See below)?		☐	☐	☐
4.33.2	Wheelchair Seating Size - Width:	Do paired wheelchair spaces total 66 inches in width? (It is not required that all wheelchair spaces be paired.)		☐	☐	☐
	Depth:	If wheelchair users enter the space from the side, is the space at least 60 inches deep?		☐	☐	☐
		If wheelchair users enter the space from the front or back, is the space at least 48 inches deep?		☐	☐	☐
4.33.3	Placement of Wheelchair Areas:	Are the wheelchair areas an integral part of the fixed seating plan with a choice of admission prices and lines of sight comparable to those for the general public? (Readily removable seats may be installed in wheelchair spaces when the spaces are not required to accommodate wheelchair users.)		☐	☐	☐
	Multiple Locations:	If the seating capacity exceeds 300, are the wheelchair spaces provided in more than one location? EXCEPTION: Accessible viewing positions may be clustered for bleachers, balconies, and other areas having sight lines which require slopes greater than 5%.		☐	☐	☐
	Companion Seating:	Is there at least one companion fixed seat provided next to each wheelchair seating area?		☐	☐	☐
4.33.3	Accessible Route:	Do wheelchair spaces adjoin an accessible route that also serves as a means of egress in an emergency?		☐	☐	☐
4.33.4 4.5	Surfaces:	Are the floor surfaces at wheelchair areas level, stable, firm, and slip-resistant?		☐	☐	☐

4.1.3(5) 4.3.8 4.5.2	Level Changes:	Are ramps or elevators used for changes in level greater than 1/2 inch? (Lifts may only be used in certain limited situations in new construction. See Minimum Requirements Summary Sheet D and ADAAG 4.1.3(5) Exception 4)		☐	☐	☐
		Do the ramps or elevators comply with 4.8 or 4.10? (Use Form 7: Ramps or Form 13: Elevators)		☐	☐	☐
4.1.3(5) 4.3.8 4.5.2	Level Changes:	When walkway levels change, is the vertical difference less than 1/4 inch? OR Are changes in level between 1/4 and 1/2 inch beveled with a maximum slope of 1:2?		☐	☐	☐
		Where floor materials change, does the vertical difference between them meet the above requirements?		☐	☐	☐
4.5.3	Carpet:	If carpet or carpet tile is used on the floor, is it securely attached?		☐	☐	☐
		Is it a low pile type of carpet (1/2 inch thick or less) with a firm pad or no pad underneath?		☐	☐	☐
4.33.5	Performing Areas:	Is there an accessible route connecting wheelchair seating locations and performance areas including stages, arena floors, dressing rooms, locker rooms, and other spaces used by performers? (Use Form 12: Building Lobbies and Corridors)		☐	☐	☐
4.1.3(19)(b)	Assistive Listening Systems - Permanently Installed:	In assembly areas where audible communications are integral to the use of the space, is there a permanently installed assistive listening system if (1) the assembly area accommodates 50 or more persons or has an audio-amplification system and (2) it has fixed seats?		☐	☐	☐
	Portable Systems:	For other assembly areas, is there a permanently installed assistive listening system or adequate number of outlets/wiring to permit use of a portable assistive listening system?		☐	☐	☐
	Receivers:	Is the minimum number of receivers provided equal to 4% of the total number of seats, but not less than two?		☐	☐	☐
4.30.7(4)	Signage:	Where a permanently installed assistive listening system is provided, is there signage installed to notify patrons of the availability of such a system?		☐	☐	☐
		Does the signage include the International Symbol for hearing loss?		☐	☐	☐
4.33.6	Placement of Assistive Listening Systems:	If the assistive listening system serves individual fixed seats, are these seats located within a 50-foot viewing distance of the stage or playing area?		☐	☐	☐
		Do these seats have a complete view of the stage or playing area?		☐	☐	☐

SURVEY FORM 16: TOILET ROOMS AND BATHROOMS

N/A ☐

Section	Item	Technical Requirements	Comments	Yes	No	N/A
4.1.2(6) 4.1.3(11) 4.22.1	Public and Common Use Toilet Rooms:	If toilet rooms are provided, does each public and common use toilet room comply with 4.22 (See below)? (A common use toilet room is one used for a restricted group of people such as occupants of a building or employees of a company.)		☐	☐	☐
	Private Use Toilet Rooms:	If other toilet rooms are provided for the use of an occupant of a specific space, (such as a private toilet room for a company president) is each toilet room adaptable (e.g., door clearance, clear floor space at fixtures and maneuvering space)?		☐	☐	☐
4.1.2(6) 4.1.3(11) 4.23.1	Public and Common Use Bathing Facilities:	If bathrooms or bathing facilities are provided, does each public and common use bathroom or bathing facility comply with 4.23 (See below)?		☐	☐	☐
4.1.3(5) Exception 1	Toilet/Bath Rooms in Buildings Eligible for Elevator Exemption:	In buildings eligible for the elevator exception, if toilet/bath rooms are provided on a level not served by an elevator, is a toilet/bath room complying with 4.22 or 4.23 provided on the accessible ground floor? If toilet or bathing facilities are also provided on floors above or below ground level, they must be accessible.		☐	☐	☐
4.22.1	Accessible Route:	Are the toilet/bath rooms located on an accessible route? (Use Form 12: Building Lobbies and Corridors)		☐	☐	☐
4.22.3 4.23.3		If provided, are each of the following accessible fixtures and controls located on an accessible route? (Use Form 12: Building Lobbies and Corridors) - 4.22.4 & 4.23.4 Water closets - 4.22.5 & 4.23.5 Urinals - 4.22.6 & 4.23.6 Lavatories and Mirrors - 4.22.7 & 4.23.7 Controls and Dispensers - 4.23.8 Bathing and Shower Facilities - 4.23.9 Medicine Cabinets		☐	☐	☐
		4.22.3; 4.23.3 Maneuvering Space: Is there an unobstructed turning space (a 60-inch diameter circle or T-shaped space) in the toilet/bath room? (See Figure 3.) (The clear floor space of fixtures and controls, the accessible route, and the turning space may overlap.)		☐	☐	☐
4.22.2; 4.23.3	Doors:	Do the doors comply with 4.13? (Use Form 11: Doors and Gates)		☐	☐	☐
		Does the door swing not intrude into the clear floor space at any fixture?		☐	☐	☐
4.1.3(16) 4.30.1	Room Identification Signage:	Do signs which designate toilet/bath rooms comply with 4.30.4, 4.30.5, and 4.30.6? (Use Form 19: Signage)		☐	☐	☐

4.22.4 4.23.4	Toilet Stalls - Standard Stall:	If toilet stalls are provided, is at least one a standard stall at least 60 inches wide complying with 4.17 (See below)?		☐	☐	☐
4.17.3	Size and Arrangement:	Does the size and arrangement of the standard toilet stall comply with Figure 30(a)? (Arrangements may be reversed.)		☐	☐	☐
	Stall Width:	Is the stall at least 60 inches wide?		☐	☐	☐
	Stall Depth:	If the toilet is wall mounted, is the stall at least 56 inches deep?		☐	☐	☐
		If the toilet is a floor mounted model, is the stall at least 59 inches deep?		☐	☐	☐
	Door Location:	Is the stall door located at the "open" side of the toilet stall?		☐	☐	☐
4.17.4	Toe Clearance:	If the stall is less than 60 inches deep, does the front partition and at least one side partition have toe clearances of at least 9 inches above the floor?		☐	☐	☐
4.17.5 4.13.5	Stall Door Width:	When the stall door is open 90 degrees, is there a clear opening of at least 32 inches measured between the face of the door and the edge of the partition on the latch side?		☐	☐	☐
	Door Swing:	If the stall door swings into the stall, is there at least 36 inches additional depth in the stall so that it does not encroach on the clear floor space required at the toilet and is there at least 18 inches of maneuvering space at the latch side of the door? (See Figure 30 (a-1))		☐	☐	☐
	Approach Aisle:	If the stall door swings out and the approach is from the latch side, is the aisle approaching the stall at least 42 inches wide? OR If the stall door swings out and the approach is from the hinge side, is the aisle approaching the stall at least 48 inches wide?		☐	☐	☐
4.17.5 4.13.6	Maneuvering Space:	If the stall door opens out at the end of an aisle, is there at least 18 inches of maneuvering space at the latch side of the stall door?		☐	☐	☐
4.17.6	Grab Bars In Standard Stall:	Are the grab bars in the standard stall placed as shown in Figure 30 (a), (c), and (d)?		☐	☐	☐
		Do the grab bars comply with 4.26.2, 4.26.3, 4.26.4 (See below)?		☐	☐	☐
4.22.4; 4.23.4	Additional Toilet Stall:	Where 6 or more toilet stalls are provided, in addition to the 60 inch wide standard stall, is at least one stall 36 inches wide with an outward swinging, self-closing door provided?		☐	☐	☐
	Grab Bars in Additional Stall:	Do the parallel grab bars in the 36 inch wide stall comply with Figure 30(d)?		☐	☐	☐
		Do the grab bars comply with 4.26.2, 4.26.3 and 4.26.4 (See below)?		☐	☐	☐

4.16.2	Toilets Not in Stalls - Front Approach:	If the toilet is not in a stall and is approached from the front and there is a lavatory alongside the toilet, is there a clear floor space at least 48 inches wide by 66 inches long? (See Figure 28)		☐	☐	☐
	Side Approach:	If the toilet is not in a stall and is approached from the side and there is a lavatory alongside the toilet, is there a clear floor space at least 48 inches wide by 56 inches long? (See Figure 28)		☐	☐	☐
	Lateral Transfer:	If the toilet is not in a stall and there is provision for a lateral transfer (no lavatory alongside the toilet), is there a clear floor space at least 60 inches wide by 56 inches long? (See Figure 28)		☐	☐	☐
4.16.4	Grab Bars for Toilets Not in Stalls:	If the toilet is not in a stall, is the back grab bar at least 36 inches long with the end closer to the side wall mounted at least 12 inches from the centerline of the toilet? (See Figure 29)		☐	☐	☐
		Is the side grab bar at least 42 inches long and mounted a maximum 12 inches from the back wall? (See Figure 29)		☐	☐	☐
		Are the grab bars horizontal and mounted between 33 and 36 inches above the floor?		☐	☐	☐
		Do the grab bars comply with 4.26.2, 4.26.3, or 4.26.4 (See below)?		☐	☐	☐
4.26.2	Grab Bars for All Accessible Toilets - Diameter:	Is the outside diameter of the grab bar between 1-1/4 and 1-1/2 inch? OR Does the shape provide an equivalent gripping surface? Note: Standard pipe sizes designated by the industry as 1-1/4 to 1-1/2 inches are acceptable for purposes of this section.		☐	☐	☐
4.26.2	Wall Clearance:	Is the space between the grab bar and the wall exactly 1-1/2 inches?		☐	☐	☐
4.26.3(5)	Fixed:	Are the grab bars secured so that they do not rotate within their fittings?		☐	☐	☐
4.26.2	Clearance in Recess	If a grab bar is located in a recess, is the recess a maximum of 3 inches deep extending at least 18 inches above the rail? (See Figure 39(d))		☐	☐	☐
4.26.3	Structural Strength:	Do the grab bars meet the structural strength requirements for bending stress and shear stress? (See 4.26.3(1) and (2))		☐	☐	☐
		Do the fasteners meet structural strength requirements for shear force and tensile force? (See 4.26.3(3) and (4))		☐	☐	☐
4.26.4	Hazards:	Are grab bars and adjacent walls free of sharp or abrasive elements?		☐	☐	☐
4.26.4	Hazards:	Do grab bars have edges with a minimum radius of 1/8 inch?		☐	☐	☐

4.22.4 4.23.4	Accessible Toilets:	Is the centerline of the toilet 18 inches from a wall or partition?		☐	☐	☐
4.16.3	Toilet Seat:	Is the top of the toilet seat between 17 and 19 inches from the floor?		☐	☐	☐
		Is the seat a type that does not automatically spring back to a lifted position?		☐	☐	☐
4.16.5; 4.27.4	Toilet Flush Controls:	Are flush controls automatic or operable with one hand without tight grasping, pinching or twisting of the wrist?		☐	☐	☐
		Is the force required to operate the controls no greater than 5 lbf?		☐	☐	☐
		Are they mounted on the wide side of the toilet where the clear floor space is provided?		☐	☐	☐
		Are the controls no higher than 44 inches above the floor?		☐	☐	☐
4.16.6	Toilet Paper Dispenser:	Is the paper dispenser mounted below the grab bar no more than 36 inches from the back wall and at least 19 inches from the floor?		☐	☐	☐
		Is the dispenser located so that it does not obstruct the use of the grab bar?		☐	☐	☐
		Does the dispenser allow continuous paper delivery?		☐	☐	☐
4.22.5 4.23.5	Urinals:	Where urinals are provided, does at least one comply with 4.18 (See below)?		☐	☐	☐
	Rim Height:	Does the urinal have an elongated rim no more than 17 inches above the floor?		☐	☐	☐
4.18.3 4.2.4	Clear Floor Space:	Is there a clear floor space at least 30 by 48 inches which allows a forward approach to the urinal?		☐	☐	☐
		Does the clear floor space adjoin or overlap an accessible route?		☐	☐	☐
4.2.4.3	Surface:	Is the surface of the clear floor space stable, firm and slip resistant?		☐	☐	☐
	Width Between Shields:	If urinal shields are provided and they do not extend beyond the front edge of the urinal rim, is there at least 29 inches between the two panels?		☐	☐	☐
4.18.4 4.27.4	Urinal Flush Controls:	Are the flush controls automatic or operable with one hand without tight grasping, pinching, or twisting of the wrist?		☐	☐	☐
		Is the force required to operate the controls no greater than 5 lbf?		☐	☐	☐
		Are the controls mounted no more than 44 inches above the floor?		☐	☐	☐
4.22.6 4.23.6	Lavatories:	If lavatories are provided, does at least one lavatory meet the following requirements?		☐	☐	☐

4.19.2	Rim Height:	Is the lavatory rim or counter surface no higher than 34 inches above the finish floor?		☐	☐	☐
	Knee Clearance:	Is there a clearance of at least 29 inches from the floor to the bottom of the apron? (See Figure 31)		☐	☐	☐
	Wall Projection:	Does the front edge of the lavatory project at least 17 inches from the wall?		☐	☐	☐
		Do the toe and knee clearances comply with Figure 31?		☐	☐	☐
4.19.3 4.2.4	Clear Floor Space:	Is there a clear floor space at least 30 by 48 inches in front of the lavatory allowing a forward approach?		☐	☐	☐
		Is no more than 19 inches of this clear floor space measured underneath the lavatory?		☐	☐	☐
		Does the clear floor space adjoin or overlap an accessible route?		☐	☐	☐
4.2.4.3	Surface:	Is the surface of the clear floor space stable, firm and slip resistant?		☐	☐	☐
4.19.4	Pipe Shielding:	Are hot water pipes and drain pipes insulated or otherwise configured to protect against contact?		☐	☐	☐
	Smooth Surfaces:	Is the area below the lavatory free of sharp or abrasive surfaces?		☐	☐	☐
4.19.5 4.27.4	Faucet Operation:	Can the faucet be operated with one hand without tight grasping, pinching, or twisting of the wrist?		☐	☐	☐
		Is the force required to operate controls no greater than 5 lbf?		☐	☐	☐
		If the valve is self-closing, does it remain open for at least 10 seconds?		☐	☐	☐
4.22.6 4.23.6 4.19.6	Mirrors:	Where mirrors are provided, does at least one mirror have a bottom edge of the reflecting surface no higher than 40 inches from the floor?		☐	☐	☐
4.22.7 4.23.7	Dispensers - Location:	Is at least one of each dispenser type accessible and on an accessible route?		☐	☐	☐
4.27.2 4.2.4	Floor Space:	Is there a clear floor space at least 30 by 48 inches in front of the dispenser allowing either a forward or a parallel approach to the dispenser?		☐	☐	☐
4.2.4.3	Surface:	Is the surface of the clear floor space stable, firm and slip resistant?		☐	☐	☐
4.27.3	Dispenser Height:	If a forward approach is provided, is the highest operable part no higher than 48 inches?		☐	☐	☐
		If a parallel approach is provided, is the highest operable part no higher than 54 inches?		☐	☐	☐
4.27.4	Dispenser Operation	Can the dispenser be operated with one hand without tight grasping, pinching, or twisting of the wrist?		☐	☐	☐
4.23.9	Medicine Cabinet:	If medicine cabinets are provided, does at least one have a usable shelf no higher than 44 inches from the floor?		☐	☐	☐

4.2.4	Clear Floor Space:	Is there a clear floor space at least 30 by 48 inches in front of the medicine cabinet allowing either a forward or parallel approach to the medicine cabinet?		☐	☐	☐
4.2.4.3	Surface:	Is the surface of the clear floor space stable, firm and slip resistant?		☐	☐	☐
4.25.2 4.2.4	Storage:	If fixed or built-in storage facilities are provided, does at least one of each type have a clear floor space 30 by 48 inches allowing either a forward or parallel approach?		☐	☐	☐
4.25.3 4.2.5 4.2.6		If a parallel approach is provided, are clothes rods and shelves between 9 and 54 inches from the floor?		☐	☐	☐
4.25.3	Shelf Height:	Where the distance between a wheelchair and clothes rod or shelf is between 10 - 21 inches (e.g., closets without accessible doors) is the accessible shelf no more than 48 inches from the floor and the reach no more than 21 inches? (See Figure 38)		☐	☐	☐
4.25.3		If a front approach is provided, are clothes rods and shelves between 15 and 48 inches from the floor?		☐	☐	☐
4.23.8	Bathtubs and Showers:	Where bathtubs or showers are provided, does at least one comply with 4.20 or 4.21? (Use Form 17: Bathtubs and Showers)		☐	☐	☐
4.1.3(14) 4.28.1	Alarms:	Where alarms are provided, do they comply with 4.28? (Use Form 20: Alarms)		☐	☐	☐

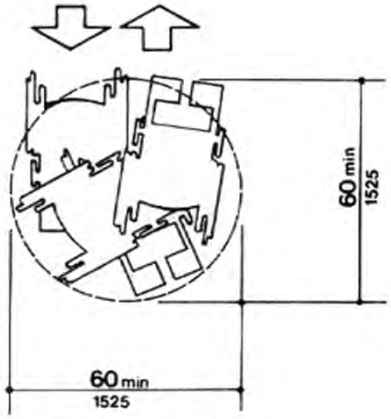

Figure 3a
Wheelchair Turning Space
60-in (1525 mm) Diameter Space

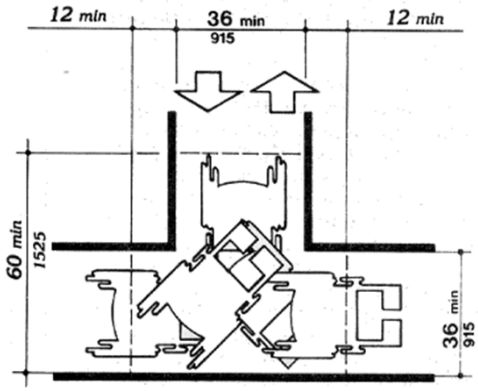

Figure 3b
Wheelchair Turning Space
T-Shaped Space for 180 Degree Turns

square.

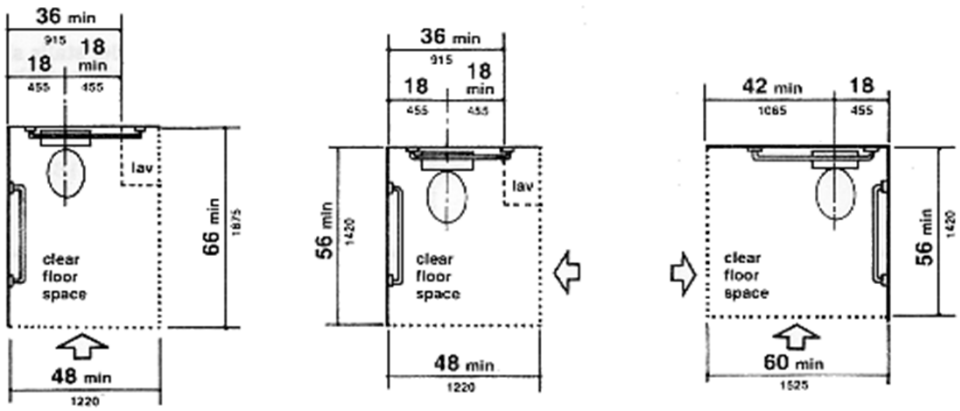

Figure 28
Clear Floor Space at Water Closets

For a front transfer to the water closet, the minimum clear floor space at the water closet is a minimum 48 inches (1220 mm) in width by a minimum of 66 inches (1675 mm) in length. For a diagonal transfer to the water closet, the minimum clear floor space is a minimum of 48 inches (1220 mm) in width by a minimum of 56 inches (1420 mm) in length. For a side transfer to the water closet, the minimum clear floor space is a minimum of 60 inches (1525 mm) in width by a minimum of 56 inches (1420 mm) in length. (4.16.2, A4.22.3)

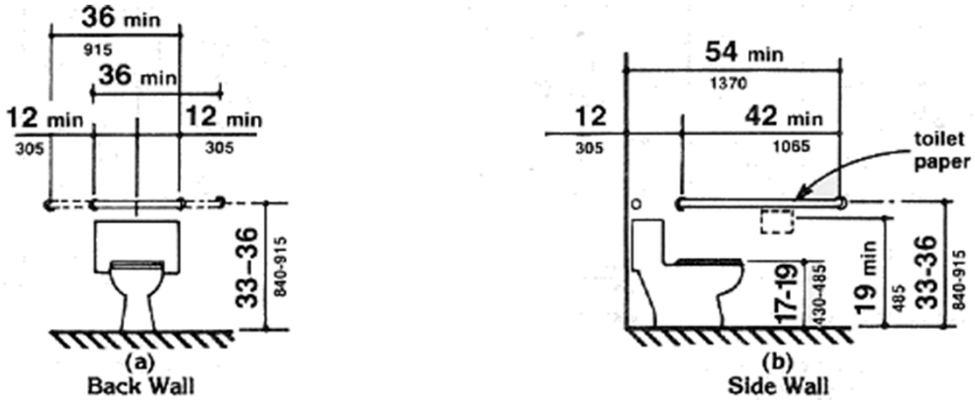

Figure 29
Grab Bars at Water Closets

Fig. 29(a) Back Wall. A 36 inch (915 mm) minimum length grab bar is required behind the water closet mounted at a height between 33 and 36 inches (840-915 mm). The grab bar must extend a minimum of 12 inches (305) beyond the center of the water closet toward the side wall and a minimum of 24 inches (610 mm) toward the open side for either a left or right side approach.

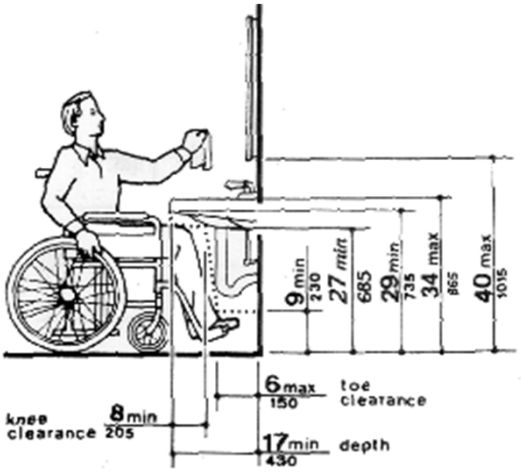

Figure 31
Lavatory Clearances

The following knee and toe clearances are required underneath a lavatory: 8 inches (205 mm) minimum measured from the front edge underneath the lavatory back towards the wall, and a toe clearance 9 inches (230 mm) minimum high, measured a maximum 6 inches (150 mm) from the wall. A minimum 27 inches (685 mm) clear space is required underneath the lavatory bowl. (4.19.2, 4.19.6)

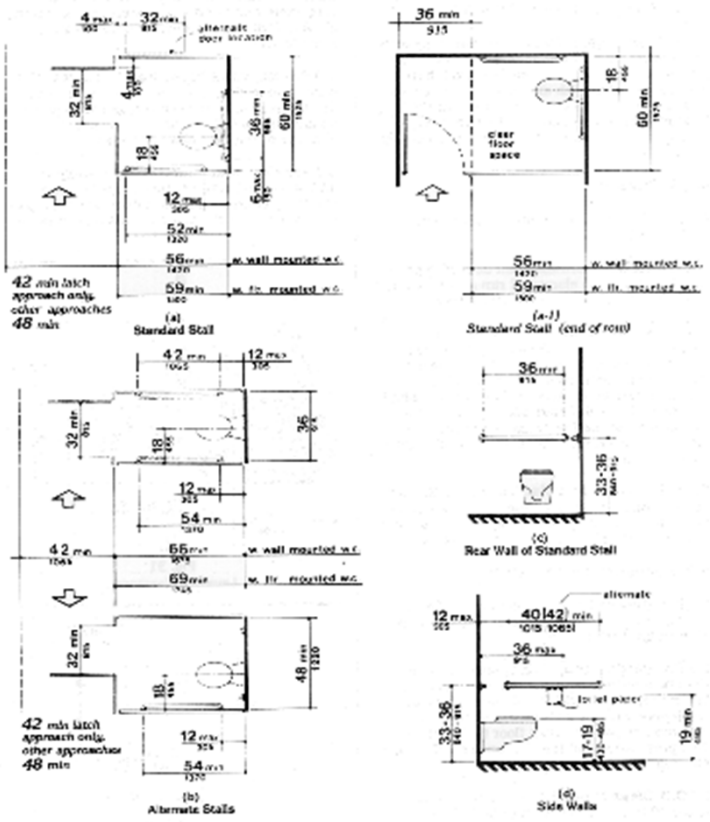

Figure 30
Toilet Stalls

Diagrams of various toilet stall configurations showing positions of water closets and grab bars. Alternate configurations for alterations are shown where use of the standard stall is not technically feasible

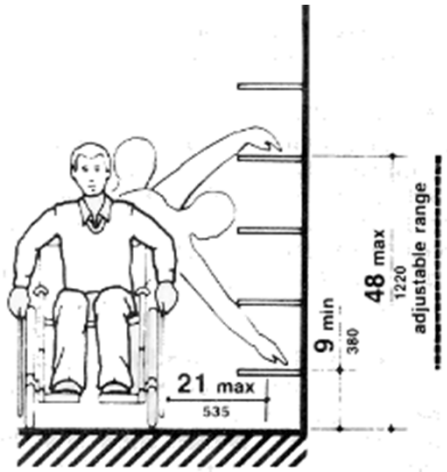

Figure 38a
Storage Shelves and Closet Shelves

If the clear floor space allows a parallel approach by a person in a wheelchair and the distance between the wheelchair and the shelf exceeds 10 inches, the maximum high side reach shall be 48 inches (1220 mm) above the floor and the low side reach shall be a minimum of 9 inches (230 mm) above the floor. The shelves can be adjustable. The maximum distance from the user to the shelf shall be 21 inches (535 mm).

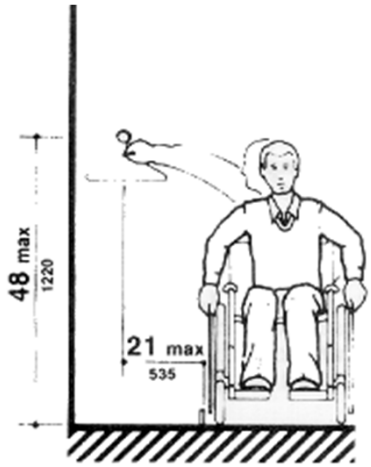

Figure 38b
Storage Shelves and Closet Shelves

If the clear floor space allows a parallel approach by a person in a wheelchair and the distance between the wheelchair and the clothes rod exceeds 10 inches, the maximum high side reach shall be 48 inches (1220 mm). The maximum distance from the user to the clothes rod shall be 21 inches (535 mm).

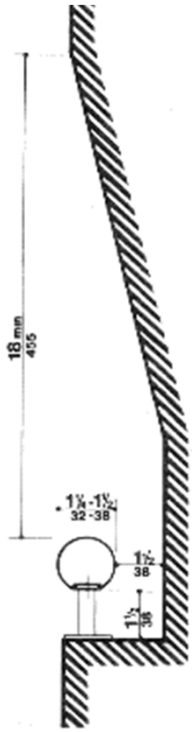

Figure 39d
Size and Spacing of Handrails and Grab Bars
Handrail

SURVEY FORM 17: BATHTUBS AND SHOWERS

N/A ☐

Section	Item	Technical Requirements	Comments	Yes	No	N/A
4.23.1	Accessible Route:	Are the bathing facilities located on an accessible route?		☐	☐	☐
4.23.2	Doors:	Do the doors comply with 4.13? (Use Form 11: Doors and Gates)		☐	☐	☐
		Does the door swing not intrude into the clear floor space at any fixture?		☐	☐	☐
4.23.8 4.20.1	Bathtubs:	Where bathtubs are provided, does at least one comply with 4.20 (See below)?		☐	☐	☐
4.20.2	Clear Space:	Does the clear floor space comply with both the dimensions and approach shown in Figure 33?		☐	☐	☐
4.20.3	Seat:	Is a securely mounted in-tub seat or built-in seat provided at the head of the tub?		☐	☐	☐
4.20.4	Grab Bar Placement:	Are grab bar dimensions and locations as shown in Figure 34?		☐	☐	☐
4.20.5 4.27.4	Controls:	Can faucets and other controls be operated with one hand and without tight grasping, pinching, or twisting of the wrist?		☐	☐	☐
		Is the force required to operate the controls no greater than 5 lbf?		☐	☐	☐
4.20.5		Are controls located within the area shown in Figure 34?		☐	☐	☐
4.20.6	Spray Unit:	Is there a shower spray unit with a hose at least 60 inches long?		☐	☐	☐
		Can the shower spray unit be used both as a hand-held and as a fixed shower head?		☐	☐	☐
4.20.7	Enclosures:	If provided, are bathtub enclosures designed so that they do not obstruct the controls or transfer from a wheelchair onto the bathtub seat or into the bathtub?		☐	☐	☐
		If an enclosure is provided on the bathtub, is there no track mounted on the bathtub rim?		☐	☐	☐
4.23.8 4.21.1	Showers:	Where showers are provided, does at least one comply with 4.21 (See below)?		☐	☐	☐
4.21.2 9.1.2		In public and common use bathing facilities with showers, does the shower stall size and clear floor space comply with either Figure 35(a) for a transfer type shower or Figure 35(b) for a roll-in shower? OR In guest rooms in transient lodging required to have roll-in showers, does the shower stall size and clear floor space comply with Figure 57(a) or 57(b)?		☐	☐	☐
4.21.2	Transfer Type Showers:	If the shower stall is a transfer type shown in Figure 35(a), is it exactly 36 by 36 inches?		☐	☐	☐
	Clear Floor Space:	In a transfer type shower, is there a clear floor space at least 36 by 48 inches outside the stall with 12 inches extending beyond the seat wall? (See Figure 35(a))		☐	☐	☐

4.21.3	Seat:	In a transfer type shower, is there a seat mounted between 17 and 19 inches from the floor?		☐	☐	☐
		Does the seat extend the full depth of the stall?		☐	☐	☐
		Is the seat L-shaped and as shown in Figure 36?		☐	☐	☐
		Is the seat on the wall opposite the controls?		☐	☐	☐
4.21.4	Grab Bars:	In a transfer type shower, are grab bars provided between 33 and 36 inches above the floor along the control wall and half the back wall (but not behind the seat) as shown in Figure 37(a)?		☐	☐	☐
4.21.7	Curbs:	If curbs are provided in a transfer type shower, are they no higher than 1/2 inch?		☐	☐	☐
4.21.5	Faucets:	In a transfer type shower, are the faucets and other controls located within the area shown in Figure 37(a)?		☐	☐	☐
4.21.2	Roll-in Showers - Public and Common Use:	In public or common use bathing facilities, if the shower stall is a roll-in type shown in Figure 35(b), is it at least 30 by 60 inches?		☐	☐	☐
4.21.2		Is there at least a 36 by 60 inch clear floor space alongside the roll-in shower as shown in Figure 35(b)?		☐	☐	☐
4.21.4	Grab Bars:	In a roll-in shower, does a grab bar extend around three sides as shown in Figures 35(b) and 37(b)?		☐	☐	☐
4.21.7	Curbs:	Is there no curb at the roll-in shower?		☐	☐	☐
4.21.5	Faucets:	In a roll-in shower, are the faucets and other controls located on the back wall within the area shown in Figure 37(b) or on a side wall as shown in Figure 37(a)?		☐	☐	☐
9.1.2 4.21.2	Roll-in Showers - Transient Lodging:	In accessible guest rooms in transient lodging required to have roll-in showers, is there a shower complying with Figure 57(a)? OR Is there a shower complying with Figure 57(b)?		☐	☐	☐
4.21.3	Seat:	In a roll-in shower required in accessible guest rooms in transient lodging, is there a folding seat affixed to the wall adjacent to the controls as shown in Figure 57(a) or 57(b)?		☐	☐	☐
4.21.4	Grab Bars:	In a roll-in shower required in accessible guest rooms in transient lodging, are grab bars provided between 33 and 36 inches above the floor around two sides as shown in Figure 57(a) or 57(b)?		☐	☐	☐
4.21.7	Curbs:	Is there no curb at the roll-in shower?		☐	☐	☐
4.21.5	Faucets:	In a roll-in shower required in accessible guest rooms in transient lodging, are the faucets and other controls located within the area shown in Figure 57(a) or 57(b)?		☐	☐	☐

4.21.5 4.27.4	Faucets - All Accessible Showers:	In all accessible showers, can faucets and other controls be operated with one hand and without tight grasping, pinching, or twisting of the wrist?		☐	☐	☐
		Is the force required to operate the controls no greater than 5 lbf?		☐	☐	☐
4.21.6	Spray Unit - All Accessible Showers:	In all accessible showers, does the shower spray unit have a hose at least 60 inches long? **EXCEPTION: In unmonitored facilities where vandalism is a consideration, a fixed shower head mounted at 48 inches above the shower floor may be used in lieu of a hand-held shower head.**		☐	☐	☐
		Can the shower spray unit be used both as a hand-held and as a fixed shower head?		☐	☐	☐
4.20.4 4.21.4 4.26.1	Grab Bars:	Do all grab bars for accessible bathtubs and showers comply with 4.26 (See below)?		☐	☐	☐
4.26.2	Diameter:	Is the outside diameter of the grab bar between 1-1/4 inch and 1-1/2 inch? OR Does the shape provide an equivalent gripping surface? Note: Standard pipe sizes designated by the industry as 1-1/4 to 1-1/2 inches are acceptable for purposes of this section.		☐	☐	☐
		Is the space between grab bars and walls exactly 1- 1/2 inches?		☐	☐	☐
4.26.3		Are the grab bars secured so that they do not rotate within the fittings?		☐	☐	☐
4.26.2	Clearance in Recess:	If a grab bar is located in a recess, is the recess a maximum of 3 inches deep extending at least 18 inches above the rail?		☐	☐	☐
4.26.3	Structural Strength:	Do the grab bars meet the structural strength requirements for bending stress and shear stress in 4.26.3?		☐	☐	☐
4.26.3		Do the fasteners meet the structural strength requirements for shear force and tensile force in 4.26.3?		☐	☐	☐
4.26.4	Hazards:	Are the grab bar edges free of sharp or abrasive elements and do edges have a minimum radius of 1/8 inch?		☐	☐	☐
4.20.3 4.21.3 4.26.3	Seats:	Do all seats for accessible bathtubs and showers meet the structural strength requirements for bending stress and shear stress in 4.26.3?		☐	☐	☐
		Do the fasteners meet the structural strength requirements for shear force and tensile force in 4.26.3?		☐	☐	☐
4.21.8	Shower Stall Enclosures:	If a shower stall enclosure is provided for an accessible shower, is it located so that it does not obstruct the controls or obstruct transfer from a wheelchair into the shower seat?		☐	☐	☐

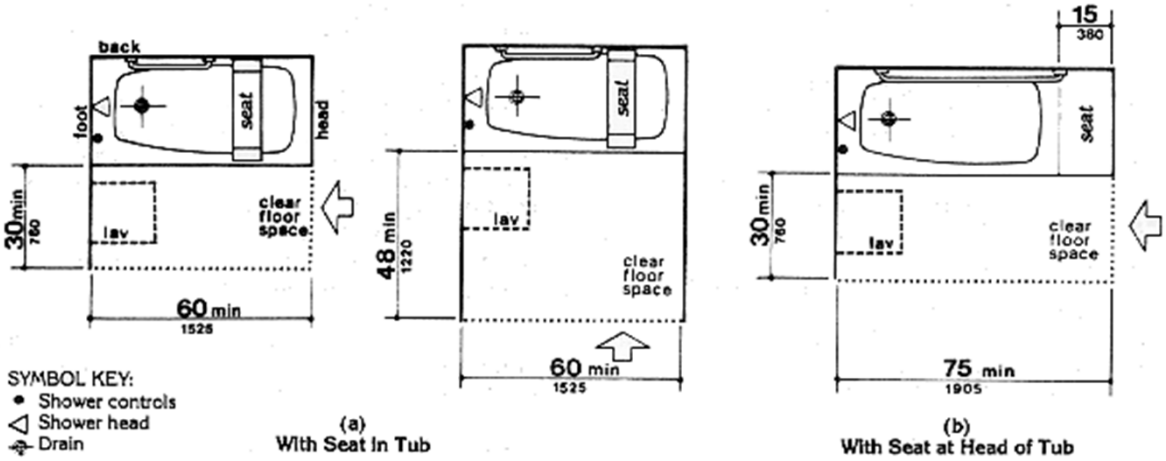

Figure 33
Clear Floor Space at Bathtubs

Fig. 33(a) With Seat in Tub. If the approach is parallel to the bathtub, a 30 inch (760 mm) minimum width by 60 inch (1525 mm) minimum length clear space is required alongside the bathtub. If the approach is perpendicular to the bathtub, a 48 inch (1220 mm) minimum width by 60 inch (1525 mm) minimum length clear space is required.

Fig. 33(b) With Seat at Head of Tub. If the approach is parallel to the bathtub, a 30 inch (760 mm) minimum width by 75 inch (1905 mm) minimum length clear space is required alongside the bathtub. The seat width must be 15 inches (380 mm) and must extend the full width of the bathtub.

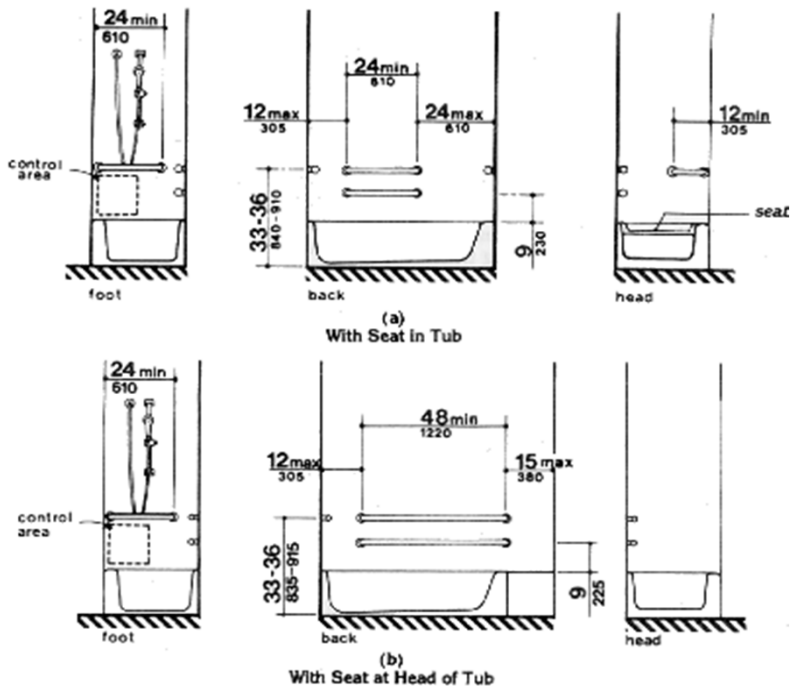

Figure 34
Grab Bars at Bathtubs

Fig. 34(a) With Seat in Tub. At the foot of the tub, the grab bar shall be 24 inches (610 mm) minimum in length measured from the outer edge of the tub. On the back wall, two grab bars are required. The grab bars mounted on the back (long) wall shall be a minimum 24 inches (610 mm) in length located 12 inches (305 mm) maximum from the foot of the tub and 24 inches (610 mm) maximum from the head of the tub. One grab bar shall be located 9 inches (230 mm) above the rim of the tub. The others shall be 33 to 36 inches (840 mm to 910 mm) above the bathroom floor. At the head of the tub, the grab bar shall be a minimum of 12 inches (305 mm) in length measured from the outer edge of the tub.

Fig. 34(b) With Seat at Head of Tub. At the foot of the tub, the grab bar shall be a minimum of 24 inches (610 mm) in length measured from the outer edge of the tub. On the back wall, two grab bars are required. The grab bars mounted on the back wall shall be a minimum of 48 inches (1220 mm) in length located a maximum of 12 inches (305 mm) from the foot of the tub and a maximum of 15 inches (380 mm) from the head of the tub. Heights of grab bars are as described above.

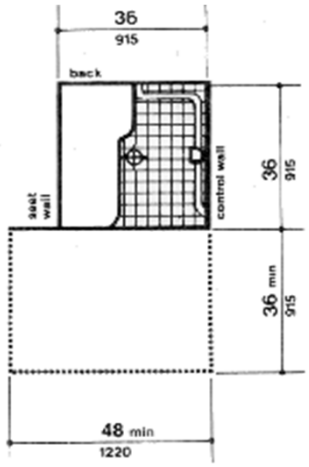

Figure 35a
Shower Size and Clearances
36-in by 36-in (760mm by 1525mm) Stall

The clear floor space shall be a minimum of 48 inches (1220 mm)in length by a minimum of 36 inches (915 mm) in width and allow for a parallel approach. The clear floor space shall extend 1 foot beyond the shower wall on which the seat is mounted.

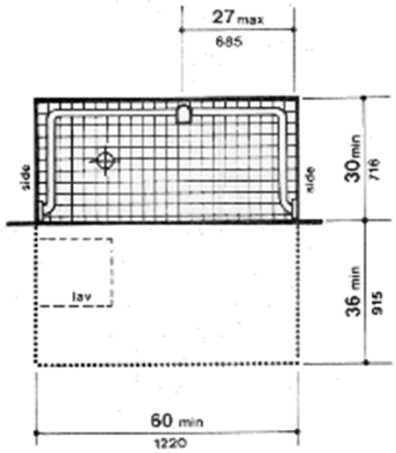

Figure 35b
Shower Size and Clearances

30-in by 60-in (915mm by 915mm) Stall

The clear floor space alongside the shower shall be a minimum of 60 inches (1220 mm) in length by a minimum of 36 inches (915 mm) in width.

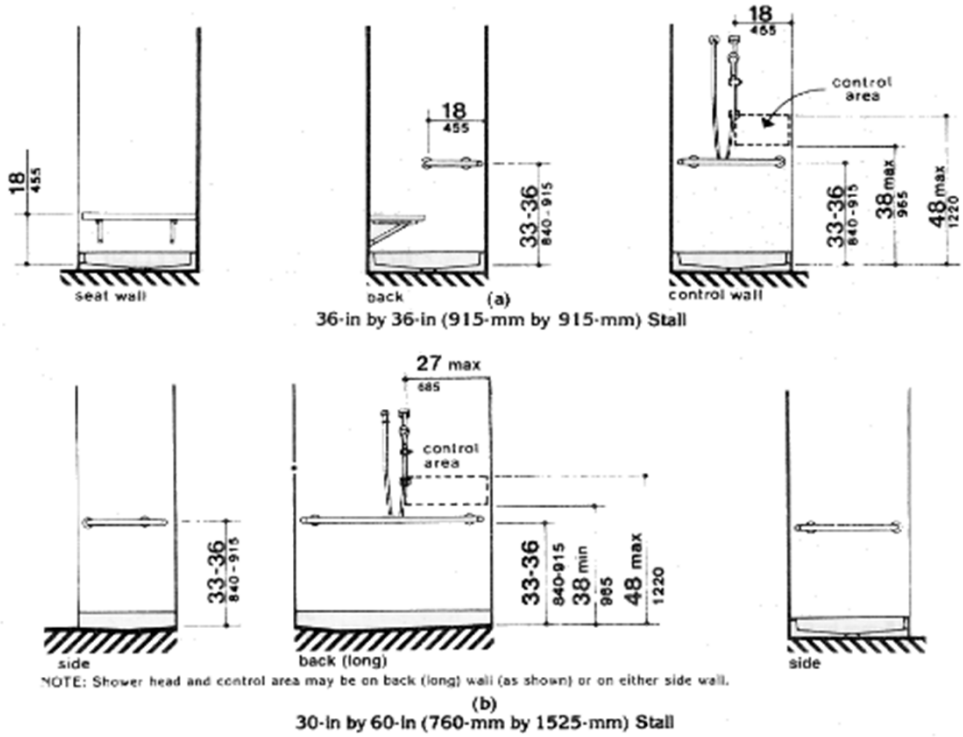

Figure 37
Grab Bars at Shower Stalls

Fig. 37(a) 36 inches by 36 inches (915 mm by 915 mm) Stall. The diagram illustrates an L-shaped grab bar that is located along the full depth of the control wall (opposite the seat) and halfway along the back wall. The grab bar shall be mounted between 33 to 36 inches (840-915 mm) above the shower floor. The bottom of the control area shall be a maximum of 38 inches (965 mm) high and the top of the control area shall be a maximum of 48 inches (1220 mm) high. The controls and spray unit shall be within 18 inches (455 mm) of the front of the shower.

Fig. 37(b) 30 inches by 60 inches (760 mm by 1525 mm) Stall. The diagram illustrates a U-shaped grab bar that wraps around the stall. The grab bar shall be between 33 to 36 inches (840-915 mm) high. The controls are placed in an area between 38 inches and 48 inches (965 mm and 1220 mm) above the floor. If the controls are located on the back (long) wall they shall be located 27 inches (685 mm) from the side wall. The shower head and control area may be located on either side wall.

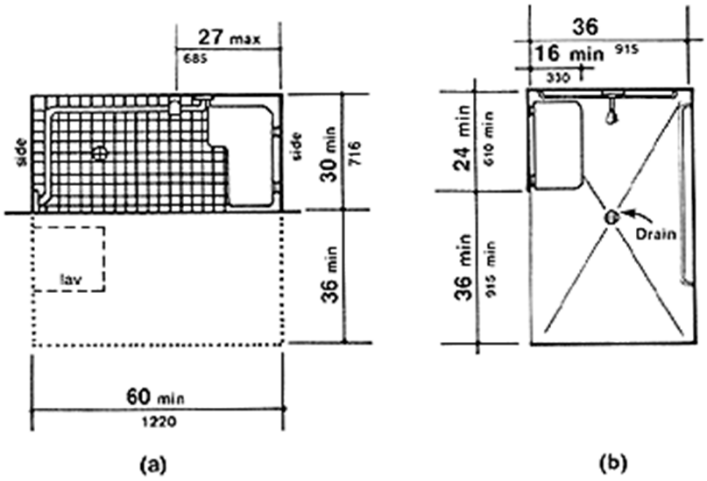

Fig. 57
Roll-in Shower with Folding Seat

Figure 57
Roll-In Shower with Folding Seat

Diagram (a): Where a fixed seat is provided in a 30 inch minimum by 60 inch (716 mm by 1220 mm) minimum shower stall, the controls and spray unit on the back (long) wall shall be located a maximum of 27 inches (685 mm) from the side wall where the seat is attached. (4.21.2, 9.1.2)

Diagram (b): An alternate 36 inch minimum by 60 inch (915 mm by 1220 mm) minimum shower stall is illustrated. The width of the stall opening stall shall be a minimum of 36 inches (915 mm) clear located on a long wall at the opposite end of the shower from the controls. The shower seat shall be 24 inches (610 mm) minimum in length by 16 inches (330 mm) minimum in width and may be rectangular in shape. The seat shall be located next to the opening to the shower and adjacent to the end wall containing the shower head and controls. (4.21.2, 9.1.2, A4.23.3)

SURVEY FORM 18: DRESSING AND FITTING ROOMS

N/A ☐

Section	Item	Technical Requirements	Comments	Yes	No	N/A
4.1.3(21) 4.35.1	Dressing and Fitting Rooms:	Where dressing and fitting rooms are provided for use by the general public, patients, customers or employees, does 5 percent (but not less than one) of dressing and fitting rooms for each type of use in each cluster of dressing and fitting rooms comply with 4.35 (See below)?		☐	☐	☐
4.35.1	Accessible Route:	Are dressing and fitting rooms that are required to be accessible located on an accessible route? (Use Form 12: Building Lobbies and Corridors)		☐	☐	☐
4.35.2	Clear Floor Space:	In a dressing or fitting room with a swinging or sliding door, is there clear floor space at least 60 inches in diameter (or a 60 by 60 inch T-shape) allowing a wheelchair user to make a 180-degree turn?		☐	☐	☐
	Door Swing:	Is the clear turning space not obstructed by the door swing?		☐	☐	☐
4.35.3 4.13	Doors:	Do all doors to accessible dressing and fitting rooms comply with 4.13? (Use Form 11: Doors and Gates)		☐	☐	☐
	Curtained Openings:	If the dressing or fitting room is private and entered through a curtained opening, is the opening at least 32 inches wide?		☐	☐	☐
		Is there adequate clear floor space in the dressing or fitting room and immediately adjacent to the curtained opening so that the dressing room is usable by a wheelchair user?		☐	☐	☐
4.35.4	Bench Affixed to Wall:	Does every accessible dressing and fitting room have a 24 by 48 inch (minimum) bench fixed to the wall along the longer dimension? (The bench may be a folding type.)		☐	☐	☐
	Bench Height:	Is the bench mounted 17 to 19 inches above the finish floor?		☐	☐	☐
		Is there clear floor space at least 30 by 48 inches provided alongside of the bench to allow a person using a wheelchair to make a parallel transfer onto the bench?		☐	☐	☐
4.35.4 4.26.3	Bench Strength:	Does the structural strength of the bench and attachments comply with 4.26.3?		☐	☐	☐
4.35.4	Bench in Wet Areas:	Where installed in conjunction with showers, swimming pools or other wet locations, does the surface of the bench have a slip-resistant surface?		☐	☐	☐
		Is the bench in a wet location constructed so that water does not accumulate on the surface?		☐	☐	☐
4.35.5	Mirror:	If there is a mirror, is it a full-length mirror at least 18 inches wide by 54 inches high?		☐	☐	☐
		Is the mirror mounted in a position affording a view to a person on the bench as well as to a person in a standing position?		☐	☐	☐

SURVEY FORM 19: SIGNAGE

N/A ☐

Section	Item	Technical Requirements	Comments	Yes	No	N/A
4.1.2(7) 4.1.3(16) 4.30.1	Directional and Informational Signs:	Do signs which provide direction to, or information about, functional spaces of the building comply with 4.30.2, 4.30.3, and 4.30.5 (See below)? **EXCEPTION: Building directories, menus, and all other signs which are temporary are not required to comply**		☐	☐	☐
4.30.2	Character Proportion:	Do the letters and numbers on such signs have a width to height ratio between 3:5 and 1:1; and a stroke width-to-height ratio between 1:5 and 1:10?		☐	☐	☐
4.30.3	Character Size:	Are the characters on such signs sized according to viewing distance with characters on overhead signs at least 3 inches high?		☐	☐	☐
4.30.5	Finish:	Do the characters and backgrounds on such signs have a non-glare finish?		☐	☐	☐
	Contrast:	Do the characters contrast with their background (light-on-dark or dark-on-light)?		☐	☐	☐
4.1.2(7) 4.1.3(16) 4.30.1	Room and Space Identification Signs:	Do signs which designate permanent rooms and spaces comply with 4.30.4, 4.30.5, and 4.30.6 (See below)?		☐	☐	☐
4.30.4	Raised and Braille Characters:	Are the characters on such signs raised and accompanied by Grade II Braille?		☐	☐	☐
	Pictograms:	If a pictorial symbol (pictogram) is used to designate permanent rooms and spaces, is the pictogram accompanied by the equivalent verbal description placed directly below the pictogram? (The verbal description must be in raised letters and accompanied by Grade II Braille.) (If the International Symbol of Accessibility or other information in addition to room and space designation is included on the sign, it does not have to be raised and accompanied by Grade II Braille.)		☐	☐	☐
		Is the border dimension of the pictogram at least 6 inches high?		☐	☐	☐
	Character Size:	Are the raised characters on such signs between 5/8 inch and 2 inches high and raised at least 1/32 inch?		☐	☐	☐
	Upper Case:	Are the raised characters on such signs upper case, and sans serif or simple serif?		☐	☐	☐
4.30.5	Finish:	Do the characters and background on such signs have a non-glare finish?		☐	☐	☐
	Contrast:	Do the characters on such signs contrast with their background (light-on-dark or dark-on-light)?		☐	☐	☐

4.30.6	Mounting Location:	Are such signs mounted on the wall adjacent to the latch side of the door? (At double leaf doors, are the signs placed on the nearest adjacent wall?)		☐	☐	☐
	Mounting Height:	Are such signs mounted with their centerline 60 inches above the ground surface?		☐	☐	☐
	Approach:	Can a person approach to within 3 inches of such signs without encountering protruding objects or standing within the swing of the door?		☐	☐	☐

SURVEY FORM 20: ALARMS

N/A ☐

Section	Item	Technical Requirements	Comments	Yes	No	N/A
4.1.3(14)	Alarms:	Does the building or facility have a fire, evacuation or emergency alarm?		☐	☐	☐
		Is there a visual alarm (e.g., flashing light) which operates at the same time as an audible alarm?		☐	☐	☐
4.28.1	Visual Alarms - Areas Required:	Are there visual alarms in public and common use restrooms?		☐	☐	☐
		Are visual alarms provided in all general use areas of the building such as meeting rooms, hallways, and lobbies?		☐	☐	☐
4.28.3		Are the visual alarm signal appliances integrated into the building or facility alarm system?		☐	☐	☐
		If single-station audible alarms are provided, then are single-station visual alarm signals provided?		☐	☐	☐
	Photometric Requirements:	Do all required visual alarm signals comply with the following minimum photometric requirements:		☐	☐	☐
		Is the lamp a xenon strobe type or equivalent?		☐	☐	☐
		Is the color clear or nominal white (i.e., unfiltered or clear filtered white light)?		☐	☐	☐
		Is the maximum pulse duration two-tenths of one second with a maximum duty cycle of 40 percent? (The pulse duration is defined as the time interval between initial and final points of 10 percent of maximum signal.)		☐	☐	☐
		Is the intensity a minimum of 75 candela?		☐	☐	☐
		Is the flash rate a minimum of 1 Hz and a maximum of 3 Hz?		☐	☐	☐
4.28.3	Location:	Is the visual signal appliance placed 80 inches above the highest floor level within the space or 6 inches below the ceiling, whichever is lower?		☐	☐	☐
		Are all portions of any room, space, corridor or hallway that is required to have a visual signal appliance no more than 50 feet from the signal (in the horizontal plane)?		☐	☐	☐
		In large rooms and spaces exceeding 100 feet across which do not have partitions or obstructions 6 feet or higher above the finish floor, are the visual signal appliances spaced around the perimeter no less than 100 feet apart or are they suspended from the ceiling?		☐	☐	☐
4.28.2	Audible Alarms:	If provided, do audible alarms exceed the prevailing equivalent sound level in the room or space by at least 15 dbA, or do audible alarms exceed by 5 dbA any maximum sound level which has a duration of 60 seconds, whichever is louder? (In no case should sound levels for alarm signals exceed 120 dbA.)		☐	☐	☐

4.28.4	Auxiliary Alarms - Sleeping Rooms:	Do accessible dwelling units and sleeping accommodations have a visual alarm connected to the building emergency alarm system? OR Is there a standard 110-volt electrical receptacle into which an alarm can be connected and a means by which the building alarm system will trigger such an alarm?		☐	☐	☐
		When visual alarms are in place, is the signal visible in all areas of the unit or room?		☐	☐	☐
4.28.4	Instructions:	Are instructions for using the auxiliary alarm provided?		☐	☐	☐

SURVEY FORM 21: DETECTABLE WARNINGS

N/A ☐

Section	Item	Technical Requirements	Comments	Yes	No	N/A
4.7.7	Curb Ramps:	Do curb ramps on a site have a detectable warning complying with 4.29.2 (see below) extending the full width and depth of the curb ramp? (Detectable warnings are not required on the flared sides.)		☐	☐	☐
4.29.5	Hazardous Vehicular Way:	If a walk crosses or adjoins a vehicular way and the walking surfaces are not separated by curbs, railings, or other elements between the pedestrian areas and vehicular areas, is the boundary between the areas defined by a continuous detectable warning complying with 4.29.2 which is 36 inches wide on the edge of the pedestrian area?		☐	☐	☐
4.29.6	Reflecting Pools:	Are the edges of reflecting pools protected by railings, walls, curbs, or detectable warnings complying with 4.29.2?		☐	☐	☐
4.29.2	Detectable Warnings - Pattern:	Do detectable warnings consist of raised truncated domes with a nominal diameter of 0.9 inches, a nominal height of 0.2 inches, and a nominal center-to-center spacing of 2.35 inches? (See Figure below)		☐	☐	☐
	Contrast:	Do detectable warnings contrast visually with adjoining surfaces (light-on-dark or dark-on-light)?		☐	☐	☐
		Is the material used to provide contrast an integral part of the walking surface?		☐	☐	☐
	Interior Resilience and Sound:	Do the detectable warnings used on interior surfaces differ from adjoining walking surfaces in resiliency or sound-on-cane contact?		☐	☐	☐

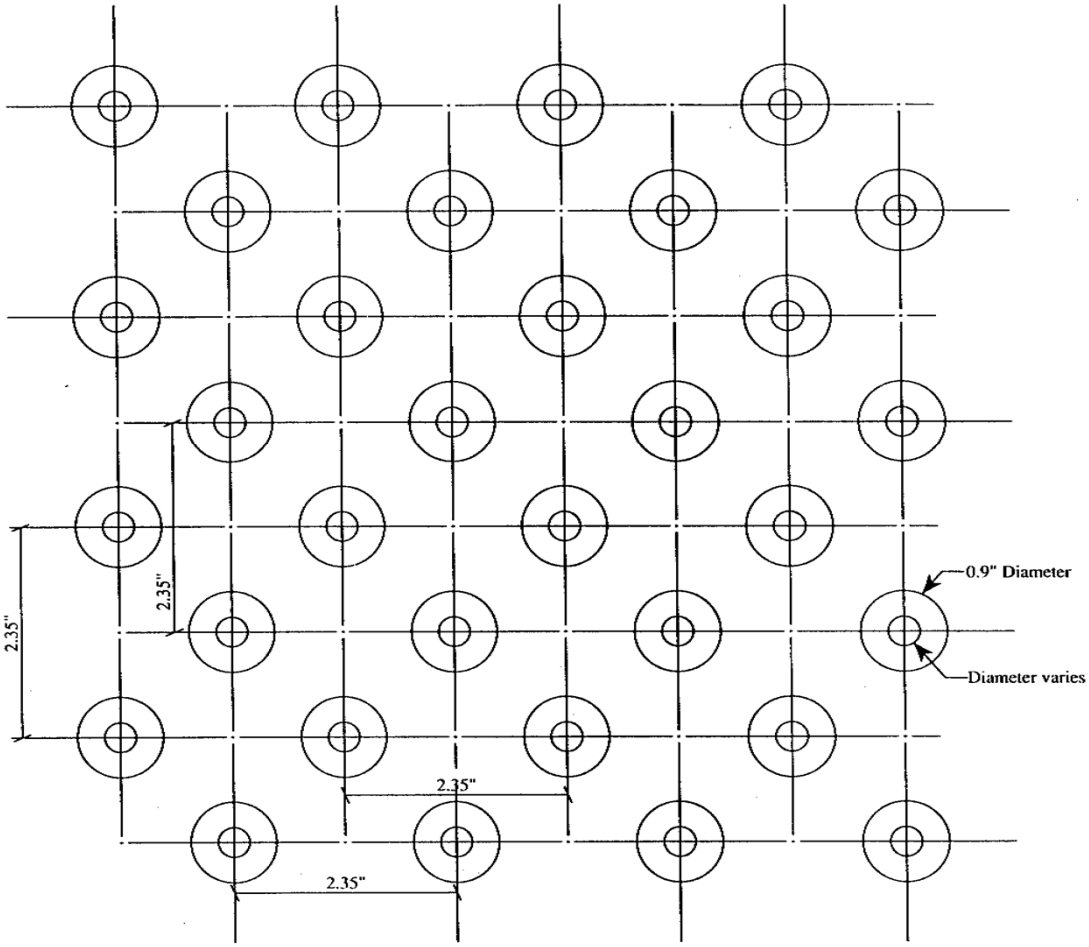

Detectable Warning: Pattern

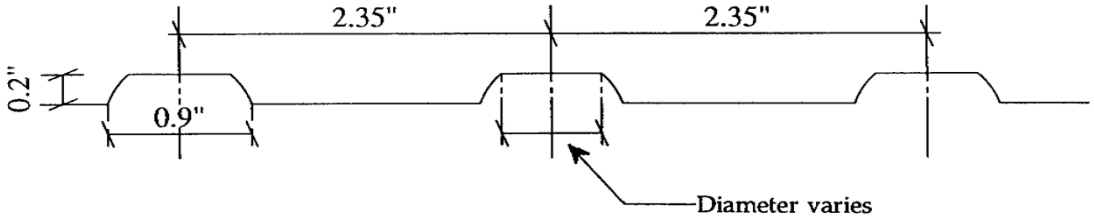

Detectable Warning: Section
NTS

SURVEY FORM 22: AUTOMATED TELLER MACHINES (ATMS)

N/A ☑

Section	Item	Technical Requirements	Comments	Yes	No	N/A
4.1.3(20)	ATMs:	If one or more ATMs are provided at a location, does at least one comply with 4.34 (See below)?				
		EXCEPTION: Drive-up-only automated teller machines are not required to comply with the reach and clear floor space requirements of 4.27.2, 4.27.3 and 4.34.3.		☐	☐	☐
4.34.1	Accessible Route:	Is each accessible ATM located on an accessible route? (Use Form 12: Building Lobbies and Corridors)		☐	☐	☐
4.34.3; 4.27.2	Clear Floor Space:	Is there clear floor space at least 30 by 48 inches, which allows a parallel approach by a wheelchair user?		☐	☐	☐
4.34.2; 4.27.3	Controls:	Is the highest operable part of the controls within both forward and side reach ranges for wheelchair users (48 inches)?		☐	☐	☐
		Are the controls operable with one hand, and without tight grasping, pinching, or twisting of the wrist?		☐	☐	☐
		Is the force required to activate the controls no greater than 5 lbf?		☐	☐	☐
4.34.4	Access for Persons with Visual Impairments:	Are instructions and information for use made accessible to and independently usable by people with visual impairments?		☐	☐	☐

Appendix C:
Building Facility Summary Sheets

Building No.:	A	B	C	D	Outsides	1004A	1004B	1250	1255	1300	1400	1501
Date:	10/17/10	10/17/10	10/17/10	10/17/10	10/17/10	10/6/11	10/7/11	10/20/11	10/20/11	10/13/11	10/13/11	10/12/11
Building Name:	Procurement Modulars - Suites A	Procurement Modulars - Suites B	Procurement Modulars - Suites C	Procurement Modulars - Suites D	Procurement Modulars - Parking Lot	Phoenix Engineering Modulars	Phoenix Engineering Modulars	Deer Valley Construction Office	Natural Resource (HV) Modulars	Mesa Equipment Service Office	Black Canyon Construction Office	48th Street construction Office
Building Address:	1739 West Jackson Street; Phoenix	1739 West Jackson Street; Phoenix	1739 West Jackson Street; Phoenix	1739 West Jackson Street; Phoenix	1739 West Jackson Street; Phoenix	1611 West Jackson Street, Phoenix	1615 West Jackson Street, Phoenix	24254 North 7th Avenue; Phoenix	24254 North 7th Avenue, Phoenix	2409 North Country Club, Mesa	2501 West Georgia Avenue, Phoenix	2600 West Broadway Road, Tempe

SURVEY FORM 1: PARKING

			N/A		--	N/A		--	N/A		--	N/A		--	N/A		--	N/A		--	N/A		--	N/A		--	N/A		--	N/A		--	N/A		--	N/A		--	N/A		--
		Total Parking Spaces in Area/Lot:	131			131			131			131			131			20			20			13			42			16			58			29		
		Number Accessible:	3			3			3			3			3			2			2			2			1			0			4			1		
		Number Van Accessible:	0			0			0			0			0			0			0			0			0			0			0			0		
Section	**Item**	**Technical Requirements**	**Yes**	**No**	**N/A**	**Yes**	**No**	**N/A**	**Yes**	**No**	**N/A**	**Yes**	**No**	**N/A**	**Yes**	**No**	**N/A**	**Yes**	**No**	**N/A**	**Yes**	**No**	**N/A**	**Yes**	**No**	**N/A**	**Yes**	**No**	**N/A**	**Yes**	**No**	**N/A**	**Yes**	**No**	**N/A**	**Yes**	**No**	**N/A**
4.1.2(5); 4.6.1	Number - Accessible Parking Spaces:	Where parking spaces are provided for self-parking, are the required number of accessible parking spaces complying with 4.6 (1:25) provided?		X			X			X			X			X		X			X				X			X			X		X				X	
	Van Accessible Spaces:	Is one in every eight accessible parking spaces (but not less than one) designated "van accessible?"		X			X			X			X			X			X			X			X			X			X			X			X	
4.6.4	Signs - Accessible Parking Spaces:	Does each accessible parking space have a vertical sign, unobscured by parked vehicles, showing the International Symbol of Accessibility?	X			X			X			X			X			X			X			X				X				X	X				X	

SURVEY FORM 3: EXTERIOR ACCESSIBLE ROUTES

			N/A		--	N/A		--	N/A		--	N/A		--	N/A		--	N/A		--	N/A		--	N/A		--	N/A		--	N/A		--	N/A		--	N/A		--

Accessible Route to be Surveyed:

From: Accessible Parking Spaces

To: Ramp connecting to the building

Section	**Item**	**Technical Requirements**	**Yes**	**No**	**N/A**	**Yes**	**No**	**N/A**	**Yes**	**No**	**N/A**	**Yes**	**No**	**N/A**	**Yes**	**No**	**N/A**	**Yes**	**No**	**N/A**	**Yes**	**No**	**N/A**	**Yes**	**No**	**N/A**	**Yes**	**No**	**N/A**	**Yes**	**No**	**N/A**	**Yes**	**No**	**N/A**	**Yes**	**No**	**N/A**
	Walkway Slope:	Is the slope of the accessible route no greater than 1:20?		X			X			X			X			X		X			X			X			X			X			X			X		
4.8.1		Where the slope is greater than 1:20, does it comply with the requirements for ramps?		X			X			X			X		X			X			X			X					X	X			X			X		
		Does the curb ramp, ramp, or elevator comply with 4.7, 4.8, or 4.10?		X			X			X			X				X	X			X			X			X			X			X			X		
4.1.2(7) 4.30.7	Symbols:	If provided, are the following elements identified by the International Symbol of Accessibility?																																				
		(a) accessible parking spaces;	X			X			X			X			X			X			X			X					X		X		X			X		
		(b) accessible passenger loading zones;			X			X			X			X			X			X			X			X			X		X				X			X
		(c) accessible entrances when not all are accessible;			X			X			X			X			X			X			X			X			X		X				X			X
		(d) accessible toilet and bathing facilities when not all are accessible			X			X			X			X			X			X			X			X			X		X				X			X

SURVEY FORM 5: DRINKING FOUNTAINS

			N/A		--	N/A		X	N/A		X	N/A		--	N/A		X	N/A		--	N/A		--	N/A		--	N/A		--	N/A		X	N/A		X	N/A		--
Section	**Item**	**Technical Requirements**	**Yes**	**No**	**N/A**	**Yes**	**No**	**N/A**	**Yes**	**No**	**N/A**	**Yes**	**No**	**N/A**	**Yes**	**No**	**N/A**	**Yes**	**No**	**N/A**	**Yes**	**No**	**N/A**	**Yes**	**No**	**N/A**	**Yes**	**No**	**N/A**	**Yes**	**No**	**N/A**	**Yes**	**No**	**N/A**	**Yes**	**No**	**N/A**
4.1.3(10)(a) 4.15.1	Water Fountains:	Where there is only one drinking fountain on a floor, is there one accessible to wheelchair users in accordance with 4.15 and one accessible to persons who have difficulty bending or stooping (drinking fountains mounted at standard height)?	X					X			X	X					X			X			X	X				X				X			X	X		
4.15.5(1)	Fountains With Knee Space:	If the unit is wall- or post-mounted, is there a clear knee space between the bottom of the apron and the floor which is at least 27 inches high, 30 inches wide, and 17 to 19 inches deep?	X					X			X	X					X	X			X			X				X				X			X	X		

SURVEY FORM 7: RAMPS

			N/A		--	N/A		--	N/A		--	N/A		--	N/A		--	N/A		--	N/A		--	N/A		--	N/A		--	N/A		--	N/A		--	N/A		--
Section	**Item**	**Technical Requirements**	**Yes**	**No**	**N/A**	**Yes**	**No**	**N/A**	**Yes**	**No**	**N/A**	**Yes**	**No**	**N/A**	**Yes**	**No**	**N/A**	**Yes**	**No**	**N/A**	**Yes**	**No**	**N/A**	**Yes**	**No**	**N/A**	**Yes**	**No**	**N/A**	**Yes**	**No**	**N/A**	**Yes**	**No**	**N/A**	**Yes**	**No**	**N/A**
4.8.1	Ramps:	Does each part of an accessible route with a slope greater than 1:20 comply with 4.8		X			X			X			X			X		X			X				X			X		X			X			X		
4.8.2	Running Slope:	Is the ramp slope 1:12 or less?		X			X			X			X				X	X			X			X			X			X			X			X		

| | | |

Building No.:	A	B	C	D	Outsides	1004A	1004B	1250	1255	1300	1400	1501
Date:	10/17/10	10/17/10	10/17/10	10/17/10	10/17/10	10/6/11	10/7/11	10/20/11	10/20/11	10/13/11	10/13/11	10/12/11
Building Name:	Procurement Modulars - Suites A	Procurement Modulars - Suites B	Procurement Modulars - Suites C	Procurement Modulars - Suites D	Procurement Modulars - Parking Lot	Phoenix Engineering Modulars	Phoenix Engineering Modulars	Deer Valley Construction Office	Natural Resource (HV) Modulars	Mesa Equipment Service Office	Black Canyon Construction Office	48th Street construction Office
Building Address:	1739 West Jackson Street; Phoenix	1739 West Jackson Street; Phoenix	1739 West Jackson Street; Phoenix	1739 West Jackson Street; Phoenix	1739 West Jackson Street; Phoenix	1611 West Jackson Street, Phoenix	1615 West Jackson Street, Phoenix	24254 North 7th Avenue; Phoenix	24254 North 7th Avenue, Phoenix	2409 North Country Club, Mesa	2501 West Georgia Avenue, Phoenix	2600 West Broadway Road, Tempe

SURVEY FORM 16: TOILET ROOMS AND BATHROOMS

			A			B			C			D			Outsides			1004A			1004B			1250			1255			1300			1400			1501		
			N/A		--	N/A		--	N/A		X	N/A		--	N/A		X	N/A		--	N/A		--	N/A		--	N/A		--	N/A		--	N/A		--	N/A		--
Section	Item	Technical Requirements	Yes	No	N/A	Yes	No	N/A	Yes	No	N/A	Yes	No	N/A	Yes	No	N/A	Yes	No	N/A	Yes	No	N/A	Yes	No	N/A	Yes	No	N/A	Yes	No	N/A	Yes	No	N/A	Yes	No	N/A
4.1.2(6) 4.1.3(11) 4.22.1	Public and Common Use Toilet Rooms:	If toilet rooms are provided, does each public and common use toilet room comply with 4.22	X			X					X		X				X	X			X			X				X		X			X				X	
4.22.3; 4.23.3	Maneuvering Space:	Is there an unobstructed turning space (a 60-inch diameter circle or T-shaped space) in the toilet/bath room?	X			X					X		X				X	X			X			X				X		X			X				X	
4.22.2; 4.23.3	Doors:	Do the doors comply with 4.13?	X			X					X		X				X	X			X			X			X			X			X			X		
		Does the door swing not intrude into the clear floor space at any fixture?	X			X					X		X				X	X			X			X			X			X			X			X		
4.1.3(16) 4.30.1	Room Identification Signage:	Do signs which designate toilet/bath rooms comply with 4.30.4, 4.30.5, and 4.30.6?	X			X					X	X					X	X			X				X		X				X		X				X	
4.22.4 4.23.4	Toilet Stalls - Standard Stall:	If toilet stalls are provided, is at least one a standard stall at least 60 inches wide complying with 4.17 ?	X			X					X	X					X	X			X					X		X				X	X					X
	Stall Width:	Is the stall at least 60 inches wide?	X			X					X	X					X	X			X					X		X				X	X					X
		If the toilet is a floor mounted model, is the stall at least 59 inches deep?	X			X					X		X				X	X			X					X	X					X	X					X
4.17.4	Toe Clearance:	If the stall is less than 60 inches deep, does the front partition and at least one side partition have toe clearances of at least 9 inches above the floor?	X				X				X	X					X	X			X					X	X					X			X			X
4.16.2	Toilets Not in Stalls - Front Approach:	If the toilet is not in a stall and is approached from the front and there is a lavatory alongside the toilet, is there a clear floor space at least 48 inches wide by 66 inches long?			X	X					X			X			X			X			X			X			X	X					X		X	
	Lateral Transfer:	If the toilet is not in a stall and there is provision for a lateral transfer (no lavatory alongside the toilet), is there a clear floor space at least 60 inches wide by 56 inches long?	X			X					X			X			X			X			X	X					X			X			X		X	
4.16.5; 4.27.4	Toilet Flush Controls:	Are they mounted on the wide side of the toilet where the clear floor space is provided?		X		X					X		X				X	X				X			X			X			X			X			X	
4.16.6	Toilet Paper Dispenser:	Is the paper dispenser mounted below the grab bar no more than 36 inches from the back wall and at least 19 inches from the floor?	X			X					X	X					X	X			X			X			X			X			X				X	
		Is the dispenser located so that it does not obstruct the use of the grab bar?	X			X					X	X					X	X			X			X			X			X			X				X	
		Does the dispenser allow continuous paper delivery?	X			X					X	X					X	X			X			X			X			X			X				X	
4.22.6 4.23.6	Lavatories:	If lavatories are provided, does at least one lavatory meet the following requirements?	X			X					X	X					X	X			X			X			X				X		X			X		
4.19.3 4.2.4	Clear Floor Space:	Is there a clear floor space at least 30 by 48 inches in front of the lavatory allowing a forward approach?	X			X					X	X					X	X			X			X			X			X			X				X	
4.19.4	Pipe Shielding:	Are hot water pipes and drain pipes insulated or otherwise configured to protect against contact?	X			X					X	X					X	X			X			X			X				X		X			X		
4.19.5 4.27.4	Faucet Operation:	Can the faucet be operated with one hand without tight grasping, pinching, or twisting of the wrist?	X			X					X	X					X	X			X			X			X				X				X		X	
		Is the force required to operate controls no greater than 5 lbf?		X		X					X	X					X	X			X				X		X				X				X		X	
4.22.6 4.23.6 4.19.6	Mirrors:	Where mirrors are provided, does at least one mirror have a bottom edge of the reflecting surface no higher than 40 inches from the floor?	X			X					X	X					X	X			X			X			X			X			X				X	

		Building No.:	A			B			C			D			Outsides			1004A			1004B			1250			1255			1300			1400			1501		
		Date:	10/17/10			10/17/10			10/17/10			10/17/10			10/17/10			10/6/11			10/7/11			10/20/11			10/20/11			10/13/11			10/13/11			10/12/11		
		Building Name:	Procurement Modulars - Suites A			Procurement Modulars - Suites B			Procurement Modulars - Suites C			Procurement Modulars - Suites D			Procurement Modulars - Parking Lot			Phoenix Engineering Modulars			Phoenix Engineering Modulars			Deer Valley Construction Office			Natural Resource (HV) Modulars			Mesa Equipment Service Office			Black Canyon Construction Office			48th Street construction Office		
		Building Address:	1739 West Jackson Street; Phoenix			1739 West Jackson Street; Phoenix			1739 West Jackson Street; Phoenix			1739 West Jackson Street; Phoenix			1739 West Jackson Street; Phoenix			1611 West Jackson Street, Phoenix			1615 West Jackson Street, Phoenix			24254 North 7th Avenue; Phoenix			24254 North 7th Avenue, Phoenix			2409 North Country Club, Mesa			2501 West Georgia Avenue, Phoenix			2600 West Broadway Road, Tempe		
4.27.2 4.2.4	Floor Space:	Is there a clear floor space at least 30 by 48 inches in front of the dispenser allowing either a forward or a parallel approach to the dispenser?	X			X					X	X					X	X			X			X			X			X			X				X	
4.27.3	Dispenser Height:	If a forward approach is provided, is the highest operable part no higher than 48 inches?		X			X				X	X					X	X			X			X			X				X		X			X		
		If a parallel approach is provided, is the highest operable part no higher than 54 inches?	X			X					X	X					X	X			X			X			X				X		X			X		
4.2.4	Clear Floor Space:	Is there a clear floor space at least 30 by 48 inches in front of the medicine cabinet allowing either a forward or parallel approach to the medicine cabinet?			X	X					X	X					X			X	X					X			X			X	X				X	

SURVEY FORM 19: SIGNAGE

			N/A		--	N/A		--	N/A		X	N/A		--	N/A		--	N/A		--	N/A		--	N/A		X	N/A		--	N/A		X	N/A		--	N/A		--
Section	Item	Technical Requirements	Yes	No	N/A	Yes	No	N/A	Yes	No	N/A	Yes	No	N/A	Yes	No	N/A	Yes	No	N/A	Yes	No	N/A	Yes	No	N/A	Yes	No	N/A	Yes	No	N/A	Yes	No	N/A	Yes	No	N/A
4.1.2(7) 4.1.3(16) 4.30.1	Room and Space Identification Signs:	Do signs which designate permanent rooms and spaces comply with 4.30.4, 4.30.5, and 4.30.6 (See below)?	X			X					X	X			X			X			X					X	X					X	X				X	
4.30.6	Mounting Location:	Are such signs mounted on the wall adjacent to the latch side of the door?	X			X					X	X			X			X			X					X	X					X			X		X	

SURVEY FORM 20: ALARMS

			N/A		--	N/A		--	N/A		--	N/A		--	N/A		--	N/A		--	N/A		--	N/A		--	N/A		--	N/A		X	N/A		--	N/A		--
Section	Item	Technical Requirements	Yes	No	N/A	Yes	No	N/A	Yes	No	N/A	Yes	No	N/A	Yes	No	N/A	Yes	No	N/A	Yes	No	N/A	Yes	No	N/A	Yes	No	N/A	Yes	No	N/A	Yes	No	N/A	Yes	No	N/A
4.28.1	Visual Alarms - Areas Required:	Are there visual alarms in public and common use restrooms?	X			X			X			X					X	X			X			X			X					X		X		X		
		Are visual alarms provided in all general use areas of the building such as meeting rooms, hallways, and lobbies?	X			X			X			X					X	X			X					X			X			X		X			X	
4.28.3	Location:	Is the visual signal appliance placed 80 inches above the highest floor level within the space or 6 inches below the ceiling, whichever is lower?		X			X			X			X				X	X			X			X			X					X	X				X	
		Are all portions of any room, space, corridor or hallway that is required to have a visual signal appliance no more than 50 feet from the signal (in the horizontal plane)?	X			X			X			X					X	X			X			X			X					X		X			X	
4.28.4	Auxiliary Alarms Sleeping Rooms:	When visual alarms are in place, is the signal visible in all areas of the unit or room?	X			X			X			X					X	X			X			X			X					X		X			X	

Building No.:	3801	3834	3843	NA	2012	2014	2042	2044	2175	2174	2002	2005
Date:	11/28/11	11/14/11	11/16/11	11/29/11	10/31/11	10/31/11	10/28/11	10/28/11	12/6/11	12/6/11	10/31/11	10/31/11
Building Name:	Cordes Jct. Maint. Lab, & DPS	Meteor Crater Rest Area - EB	Meteor Crater Rest Area - WB	Wickenburg MVD Office	Bouse Wash Rest Area (EB)	Bouse Wash Rest Area (WB)	Burnt Well Rest Area (EB)	Burnt Well Rest Area (WB)	Canoa Ranch Rest Area (NB)	Canoa Ranch Rest Area (SB)	Ehrenburg Rest Area (EB)	Ehrenburg Rest Area (WB)
Building Address:	15001 S. Hwy. 69	I-40 MP 235+/-	I-40 MP 235+/-	472 E. Wickenburg Way, Ste.304	I-10 Milepost 52 +/_	I-10 Milepost 52 +/_	I-10 Milepost 85 +/-	I-10 Milepost 85 +/-	I-19 Milepost 34 +/-	I-19 Milepost 34 +/-	I-10 Milepost 6 +/_	I-10 Milepost 6 +/_

SURVEY FORM 1: PARKING

			N/A		--	N/A		--	N/A		--	N/A		--	N/A		--	N/A		--	N/A		--	N/A		--	N/A		--	N/A		--	N/A		--	N/A		--
		Total Parking Spaces in Area/Lot:	36			58			76			52			30 (car) + 12 (semi)			23 (car) + 14 (semi)			51 (car) + 29 (semi)			50 (car) + 31 (semi)			cars and 19 semi tru			cars and 19 semi tru			30 (car) + 15 (semi)			30 (car) + 15 (semi)		
		Number Accessible:	3			5			5			2			2 (car) + 1 (semi)			2 (car) + 1 (semi)			2 (car) + 1 (semi)			2 (car) + 1 (semi)			3 cars and 2 semis			3 cars and 2 semis			2 (car) + 1 (semi)			2 (car) + 1 (semi)		
		Number Van Accessible:	2			1			1			1			0			0			0			0			0			0			0			0		
Section	**Item**	**Technical Requirements**	**Yes**	**No**	**N/A**	**Yes**	**No**	**N/A**	**Yes**	**No**	**N/A**	**Yes**	**No**	**N/A**	**Yes**	**No**	**N/A**	**Yes**	**No**	**N/A**	**Yes**	**No**	**N/A**	**Yes**	**No**	**N/A**	**Yes**	**No**	**N/A**	**Yes**	**No**	**N/A**	**Yes**	**No**	**N/A**	**Yes**	**No**	**N/A**
	Van Accessible Spaces:	Is one in every eight accessible parking spaces (but not less than one) designated "van accessible?"	X			X			X			X				X			X			X			X			X			X			X			X	
4.6.2	**Location -** Serving Accessible Entrance:	Are accessible parking spaces which serve a particular building on the shortest accessible route of travel to the building's accessible entrance?	X			X			X				X			X			X		X			X			X			X			X			X		
	Serving Multiple Accessible Entrances:	If the building has multiple accessible entrances with adjacent parking, are the accessible parking spaces on the shortest accessible route of travel to the parking facility's accessible pedestrian entrance?	X			X			X				X			X			X		X			X			X			X			X			X		
	Separate Parking Facility:	Where a parking facility does not serve a particular building, are the accessible parking spaces on the shortest accessible route of travel to the parking facility's accessible entrance?			X	X			X				X				X			X			X			X			X			X			X			X
4.1.2(5)(b)	Width of Van Accessible Access Aisle:	If the parking space is designated as "van accessible," is the adjacent access aisle at least 96 inches wide?		X		X			X			X					X			X			X			X			X			X			X			X
4.6.4	Van Accessible Spaces:	Do van accessible spaces have a vertical sign, unobscured by parked vehicles, showing the International Symbol of Accessibility with an additional sign "Van-Accessible" mounted below?	X				X			X		X					X			X			X			X			X			X			X			X

SURVEY FORM 3: EXTERIOR ACCESSIBLE ROUTES

			N/A		--	N/A		--	N/A		--	N/A		--	N/A		--	N/A		--	N/A		--	N/A		--	N/A		--	N/A		--	N/A		--	N/A		--

Accessible Route to be Surveyed:

From: Accessible Parking Spaces

To: Ramp connecting to the building

Section	**Item**	**Technical Requirements**	**Yes**	**No**	**N/A**	**Yes**	**No**	**N/A**	**Yes**	**No**	**N/A**	**Yes**	**No**	**N/A**	**Yes**	**No**	**N/A**	**Yes**	**No**	**N/A**	**Yes**	**No**	**N/A**	**Yes**	**No**	**N/A**	**Yes**	**No**	**N/A**	**Yes**	**No**	**N/A**	**Yes**	**No**	**N/A**	**Yes**	**No**	**N/A**
4.4.2	Cane Detectable Barrier Where Head Room is Less Than 80 Inches:	If there is less than 80 inches clear head room in an area adjoining an accessible route, is there a cane detectable barrier within 27 inches of the floor? (See Figure 8(c-1))			X			X			X			X			X			X			X			X			X			X			X			X
		Do free standing objects mounted on posts with leading edges between 27 and 80 inches high (such as a sign or telephone) project less than 12 inches into the perpendicular route of travel?			X		X		X				X				X			X			X			X			X			X			X			X
	Walkway Slope:	Is the slope of the accessible route no greater than 1:20?	X			X			X			X				X			X		X			X			X			X			X			X		
4.8.1		Where the slope is greater than 1:20, does it comply with the requirements for ramps?			X			X		X		X			X			X			X			X			X			X			X			X		
		Does the curb ramp, ramp, or elevator comply with 4.7, 4.8, or 4.10?		X		X			X			X				X		X			X			X			X			X			X			X		
		(c) accessible entrances when not all are accessible;		X		X			X				X				X			X			X			X			X			X			X			X
4.1.3(8)(d)	Directions to Accessible Entrance:	When not all entrances are accessible, is there directional signage indicating the accessible route to an accessible entrance?		X		X			X				X		X					X			X			X			X			X			X			X

SURVEY FORM 4: CURB RAMPS

			N/A		--	N/A		--	N/A		--	N/A		--	N/A		--	N/A		--	N/A		--	N/A		--	N/A		--	N/A		--	N/A		--	N/A		--

| | | |

		Building No.:	3801			3834			3843			NA			2012			2014			2042			2044			2175			2174			2002			2005		
		Date:	11/28/11			11/14/11			11/16/11			11/29/11			10/31/11			10/31/11			10/28/11			10/28/11			12/6/11			12/6/11			10/31/11			10/31/11		
		Building Name:	Cordes Jct. Maint. Lab, & DPS			Meteor Crater Rest Area - EB			Meteor Crater Rest Area - WB			Wickenburg MVD Office			Bouse Wash Rest Area (EB)			Bouse Wash Rest Area (WB)			Burnt Well Rest Area (EB)			Burnt Well Rest Area (WB)			Canoa Ranch Rest Area (NB)			Canoa Ranch Rest Area (SB)			Ehrenburg Rest Area (EB)			Ehrenburg Rest Area (WB)		
		Building Address:	15001 S. Hwy. 69			I-40 MP 235+/-			I-40 MP 235+/-			472 E. Wickenburg Way, Ste.304			I-10 Milepost 52 +/_			I-10 Milepost 52 +/_			I-10 Milepost 85 +/-			I-10 Milepost 85 +/-			I-19 Milepost 34 +/-			I-19 Milepost 34 +/-			I-10 Milepost 6 +/_			I-10 Milepost 6 +/_		
	Cord Length:	If an acoustic coupler is used, is the telephone cord sufficiently long enough to allow connection of the text telephone to the telephone receiver?			X			X			X			X			X			X		X			X				X			X			X			X
4.1.3(16) 4.30.1 4.30.7	Directional Signs:	Is the directional signage placed adjacent to all telephone banks which do not contain a text telephone?			X			X			X			X			X			X		X			X				X			X			X			X

SURVEY FORM 7: RAMPS

			N/A		X	N/A		X	N/A		X	N/A		X	N/A		--	N/A		--	N/A		X	N/A		X	N/A		X	N/A		X	N/A		X	N/A		X
Section	Item	Technical Requirements	Yes	No	N/A	Yes	No	N/A	Yes	No	N/A	Yes	No	N/A	Yes	No	N/A	Yes	No	N/A	Yes	No	N/A	Yes	No	N/A	Yes	No	N/A	Yes	No	N/A	Yes	No	N/A	Yes	No	N/A
4.8.1	Ramps:	Does each part of an accessible route with a slope greater than 1:20 comply with 4.8			X			X			X			X		X		X					X			X			X			X			X			X
	Maximum Rise:	Is the rise for any run a maximum of 30 inches?			X			X			X			X		X		X					X			X			X			X			X			X
4.8.7	Edge Protection:	If a ramp or landing has a drop off, does it have a minimum 2 inch curb, a wall, railings, or projecting surfaces which prevent people from falling off?			X			X			X			X		X				X			X			X			X			X			X			X

SURVEY FORM 12: BUILDING LOBBIES AND CORRIDORS (INTERIOR ACCESSIBLE ROUTE)

			N/A		--	N/A		X	N/A		X	N/A		--	N/A		X	N/A		X	N/A		X	N/A		X	N/A		X	N/A		X	N/A		X	N/A		X
Section	Item	Technical Requirements	Yes	No	N/A	Yes	No	N/A	Yes	No	N/A	Yes	No	N/A	Yes	No	N/A	Yes	No	N/A	Yes	No	N/A	Yes	No	N/A	Yes	No	N/A	Yes	No	N/A	Yes	No	N/A	Yes	No	N/A
4.3.5 4.4.1	Provisions for Persons Who are Blind - Protruding Objects:	If objects mounted to the wall have leading edges between 27 and 80 inches from the floor, do they project less than 4 inches into the pathway? (Wall mounted objects with leading edges at or below 27 inches may project any amount so long as the required clear width of an accessible route is not reduced.)		X				X			X		X				X			X			X			X			X			X			X			X
4.1.3(14) 4.28	Alarms:	If emergency warning systems are provided, do they include both audible alarms and visual alarms complying with 4.28? (Use Form 20: Alarms)		X				X			X	X					X			X			X			X			X			X			X			X

SURVEY FORM 14: ROOMS AND SPACES

			N/A		--	N/A		X	N/A		X	N/A		--	N/A		X	N/A		X	N/A		X	N/A		X	N/A		X	N/A		X	N/A		X	N/A		X
Section	Item	Technical Requirements	Yes	No	N/A	Yes	No	N/A	Yes	No	N/A	Yes	No	N/A	Yes	No	N/A	Yes	No	N/A	Yes	No	N/A	Yes	No	N/A	Yes	No	N/A	Yes	No	N/A	Yes	No	N/A	Yes	No	N/A
4.4.1	Protruding Objects:	If objects mounted to the wall have leading edges between 27 and 80 inches from the floor, do they project less than 4 inches into the accessible space?		X				X			X		X				X			X			X			X			X			X			X			X
4.1.3(14) 4.28.1	Alarms:	Where alarms are provided, do they comply with 4.28? (Use Form 21: Alarms)		X				X			X	X					X			X			X			X			X			X			X			X

SURVEY FORM 16: TOILET ROOMS AND BATHROOMS

			N/A		--	N/A		--	N/A		--	N/A		--	N/A		--	N/A		--	N/A		--	N/A		--	N/A		--	N/A		--	N/A		--	N/A		--
Section	Item	Technical Requirements	Yes	No	N/A	Yes	No	N/A	Yes	No	N/A	Yes	No	N/A	Yes	No	N/A	Yes	No	N/A	Yes	No	N/A	Yes	No	N/A	Yes	No	N/A	Yes	No	N/A	Yes	No	N/A	Yes	No	N/A
4.22.4 4.23.4	Toilet Stalls - Standard Stall:	If toilet stalls are provided, is at least one a standard stall at least 60 inches wide complying with 4.17 ?	X			X			X					X		X			X		X			X			X			X			X			X		
4.17.3	Size and Arrangement:	Does the size and arrangement of the standard toilet stall comply with Figure 30(a)?	X			X			X					X		X			X		X			X			X			X			X			X		
	Stall Width:	Is the stall at least 60 inches wide?	X			X			X					X		X			X		X			X			X			X			X			X		
	Stall Depth:	If the toilet is wall mounted, is the stall at least 56 inches deep?	X			X			X					X		X			X		X			X			X			X			X			X		
4.17.4	Toe Clearance:	If the stall is less than 60 inches deep, does the front partition and at least one side partition have toe clearances of at least 9 inches above the floor?			X			X			X			X		X			X				X			X			X			X			X			X

		Building No.:	3801			3834			3843			NA			2012			2014			2042			2044			2175			2174			2002			2005		
		Date:	11/28/11			11/14/11			11/16/11			11/29/11			10/31/11			10/31/11			10/28/11			10/28/11			12/6/11			12/6/11			10/31/11			10/31/11		
		Building Name:	Cordes Jct. Maint. Lab, & DPS			Meteor Crater Rest Area - EB			Meteor Crater Rest Area - WB			Wickenburg MVD Office			Bouse Wash Rest Area (EB)			Bouse Wash Rest Area (WB)			Burnt Well Rest Area (EB)			Burnt Well Rest Area (WB)			Canoa Ranch Rest Area (NB)			Canoa Ranch Rest Area (SB)			Ehrenburg Rest Area (EB)			Ehrenburg Rest Area (WB)		
		Building Address:	15001 S. Hwy. 69			I-40 MP 235+/-			I-40 MP 235+/-			472 E. Wickenburg Way, Ste.304			I-10 Milepost 52 +/_			I-10 Milepost 52 +/_			I-10 Milepost 85 +/-			I-10 Milepost 85 +/-			I-19 Milepost 34 +/-			I-19 Milepost 34 +/-			I-10 Milepost 6 +/_			I-10 Milepost 6 +/_		
	Door Swing:	If the stall door swings into the stall, is there at least 36 inches additional depth in the stall so that it does not encroach on the clear floor space required at the toilet and is there at least 18 inches of maneuvering space at the latch side of the door?	X			X			X					X		X			X				X				X	X			X					X			X
4.17.6	Grab Bars In Standard Stall:	Are the grab bars in the standard stall placed as shown in Figure 30 (a), (c), and (d)?	X			X			X					X	X			X			X				X		X			X			X			X		
		Do the grab bars comply with 4.26.2, 4.26.3, 4.26.4 (See below)?	X			X			X					X	X			X			X				X		X			X			X			X		
4.16.6	Toilet Paper Dispenser:	Is the paper dispenser mounted below the grab bar no more than 36 inches from the back wall and at least 19 inches from the floor?	X			X			X			X			X				X				X			X		X			X				X		X		
4.18.4 4.27.4	Urinal Flush Controls:	Are the flush controls automatic or operable with one hand without tight grasping, pinching, or twisting of the wrist?	X			X			X					X	X			X			X			X			X				X		X			X		
4.19.4	Pipe Shielding:	Are hot water pipes and drain pipes insulated or otherwise configured to protect against contact?	X				X			X			X			X				X		X			X		X			X					X			X
4.27.2 4.2.4	Floor Space:	Is there a clear floor space at least 30 by 48 inches in front of the dispenser allowing either a forward or a parallel approach to the dispenser?	X			X			X				X		X			X			X			X			X			X			X			X		
4.1.3(14) 4.28.1	Alarms:	Where alarms are provided, do they comply with 4.28?		X				X			X	X					X			X			X			X			X			X			X			X

SURVEY FORM 17: BATHTUBS AND SHOWERS

			N/A		--	N/A		X	N/A		X	N/A		X	N/A		X	N/A		X	N/A		X	N/A		X	N/A		X	N/A		X	N/A		X	N/A		X
Section	Item	Technical Requirements	Yes	No	N/A	Yes	No	N/A	Yes	No	N/A	Yes	No	N/A	Yes	No	N/A	Yes	No	N/A	Yes	No	N/A	Yes	No	N/A	Yes	No	N/A	Yes	No	N/A	Yes	No	N/A	Yes	No	N/A
4.21.2	Transfer Type Showers:	If the shower stall is a transfer type shown in Figure 35(a), is it exactly 36 by 36 inches?		X				X			X			X			X			X			X			X			X			X			X			X

SURVEY FORM 19: SIGNAGE

			N/A		--	N/A		--	N/A		--	N/A		--	N/A		--	N/A		--	N/A		--	N/A		--	N/A		--	N/A		--	N/A		--	N/A		--
Section	Item	Technical Requirements	Yes	No	N/A	Yes	No	N/A	Yes	No	N/A	Yes	No	N/A	Yes	No	N/A	Yes	No	N/A	Yes	No	N/A	Yes	No	N/A	Yes	No	N/A	Yes	No	N/A	Yes	No	N/A	Yes	No	N/A
4.30.6	Mounting Location:	Are such signs mounted on the wall adjacent to the latch side of the door?	X			X			X			X			X			X			X			X			X			X				X		X		

SURVEY FORM 20: ALARMS

			N/A		--	N/A		X	N/A		X	N/A		--	N/A		X	N/A		X	N/A		X	N/A		X	N/A		X	N/A		X	N/A		X	N/A		X
Section	Item	Technical Requirements	Yes	No	N/A	Yes	No	N/A	Yes	No	N/A	Yes	No	N/A	Yes	No	N/A	Yes	No	N/A	Yes	No	N/A	Yes	No	N/A	Yes	No	N/A	Yes	No	N/A	Yes	No	N/A	Yes	No	N/A
4.1.3(14)	Alarms:	Is there a visual alarm (e.g., flashing light) which operates at the same time as an audible alarm?		X				X			X	X					X			X			X			X			X			X			X			X
4.28.1	Visual Alarms - Areas Required:	Are there visual alarms in public and common use restrooms?		X				X			X	X					X			X			X			X			X			X			X			X
		Are visual alarms provided in all general use areas of the building such as meeting rooms, hallways, and lobbies?		X				X			X	X					X			X			X			X			X			X			X			X
4.28.3		If single-station audible alarms are provided, then are single-station visual alarm signals provided?		X				X			X	X					X			X			X			X			X			X			X			X
4.28.4	Instructions:	Are instructions for using the auxiliary alarm provided?			X			X			X		X				X			X			X			X			X			X			X			X

SURVEY FORM 21: DETECTABLE WARNINGS

			N/A		X	N/A		--	N/A		--	N/A		--	N/A		X	N/A		X	N/A		X	N/A		X	N/A		X	N/A		X	N/A		X	N/A		X
Section	Item	Technical Requirements	Yes	No	N/A	Yes	No	N/A	Yes	No	N/A	Yes	No	N/A	Yes	No	N/A	Yes	No	N/A	Yes	No	N/A	Yes	No	N/A	Yes	No	N/A	Yes	No	N/A	Yes	No	N/A	Yes	No	N/A
	Contrast:	Do detectable warnings contrast visually with adjoining surfaces (light-on-dark or dark-on-light)?			X	X			X				X				X			X			X			X			X			X			X			X

Building No.:	2662	3802	2614	3019	3021	3119	3120	3137	3358	3623	3624	3751
Date:	12/20/11	11/8/11	12/12/11	12/13/11	12/13/11	10/26/11	11/3/11	11/30/11	11/15/11	11/2/11	11/2/11	10/26/11
Building Name:	Safford Equipment Shop Service	Grand Canyon ARFF	Parker MVD Office	Haviland Rest Area - EB	Haviland Rest Area - WB	McGuireville Rest Area - NB	McGuireville Rest Area - SB	Payson Equip. Services Shop	Painted Cliffs Rest Area	Regional Development Offices	Conference / Training Facility	Sunset Point Rest Area
Building Address:	US 191 Milepost 186	1542 Liberator Dr., Tusayan	29305 Mutahar St. Parker, AZ	I-40 MP 22+/-	I-40 MP 22+/-	I-17 MP 296+/-	I-17 MP 296+/-	200 N. Colcord Rd., Payson	I-40 MP 359+/-58	1901 S. Milton Ave.	1901 S. Milton Ave	I-17 MP 250+/-

SURVEY FORM 1: PARKING

			N/A		X	N/A		--	N/A		--	N/A		--	N/A		--	N/A		--	N/A		--	N/A		X	N/A		--	N/A		--	N/A		--	N/A		--	N/A		--
		Total Parking Spaces in Area/Lot:	0			12			32			36			35			63			65			No			58			30			30			72		
		Number Accessible:	0			2			4			3			4			3			3			Marked			3			0			0			12		
		Number Van Accessible:	0			1			2			0			0			0			0			Parking Spaces			0			0			0			0		
Section	**Item**	**Technical Requirements**	**Yes**	**No**	**N/A**	**Yes**	**No**	**N/A**	**Yes**	**No**	**N/A**	**Yes**	**No**	**N/A**	**Yes**	**No**	**N/A**	**Yes**	**No**	**N/A**	**Yes**	**No**	**N/A**	**Yes**	**No**	**N/A**	**Yes**	**No**	**N/A**	**Yes**	**No**	**N/A**	**Yes**	**No**	**N/A**	**Yes**	**No**	**N/A**
4.1.2(5); 4.6.1	Number - Accessible Parking Spaces:	Where parking spaces are provided for self-parking, are the required number of accessible parking spaces complying with 4.6 (1:25) provided?		X		X			X			X			X			X			X					X	X				X			X		X		
	Each Area/Lot:	Are the accessible parking spaces located in each specific area/lot OR is equivalent or greater accessibility provided in terms of distance from the accessible entrance, cost and convenience?		X		X			X			X			X			X			X					X	X				X			X		X		
	Van Accessible Spaces:	Is one in every eight accessible parking spaces (but not less than one) designated "van accessible?"		X		X			X				X				X			X			X			X			X			X			X		X	
	Separate Parking Facility:	Where a parking facility does not serve a particular building, are the accessible parking spaces on the shortest accessible route of travel to the parking facility's accessible entrance?		X				X			X			X			X			X			X			X	X					X			X			X
4.6.4	Signs - Accessible Parking Spaces:	Does each accessible parking space have a vertical sign, unobscured by parked vehicles, showing the International Symbol of Accessibility?			X	X			X			X			X			X				X					X	X					X			X	X		
4.6.4	Van Accessible Spaces:	Do van accessible spaces have a vertical sign, unobscured by parked vehicles, showing the International Symbol of Accessibility with an additional sign "Van-Accessible" mounted below?			X	X			X					X			X			X			X			X			X			X			X		X	

SURVEY FORM 3: EXTERIOR ACCESSIBLE ROUTES

			N/A		X	N/A		--	N/A		--	N/A		--	N/A		--	N/A		--	N/A		--	N/A		--	N/A		--	N/A		--	N/A		--	N/A		--	N/A		--

Accessible Route to be Surveyed:

From: Accessible Parking Spaces

To: Ramp connecting to the building

Section	**Item**	**Technical Requirements**	**Yes**	**No**	**N/A**	**Yes**	**No**	**N/A**	**Yes**	**No**	**N/A**	**Yes**	**No**	**N/A**	**Yes**	**No**	**N/A**	**Yes**	**No**	**N/A**	**Yes**	**No**	**N/A**	**Yes**	**No**	**N/A**	**Yes**	**No**	**N/A**	**Yes**	**No**	**N/A**	**Yes**	**No**	**N/A**	**Yes**	**No**	**N/A**
4.1.2(2) 4.3.2(2)	Buildings Connected:	Is there an accessible route connecting accessible buildings, facilities, elements and spaces on the same site?		X		X			X			X			X			X			X			X			X			X			X			X		
4.4.1	Protruding Objects:	If objects mounted to the wall have leading edges between 27 and 80 inches from the floor, do they project less than 4 inches into the pathway? (Wall mounted objects with leading edges at or below 27 inches may project any amount so long as the required clear width of an accessible route is not reduced.)			X	X					X		X			X				X			X			X		X			X			X		X		
		Do free standing objects mounted on posts with leading edges between 27 and 80 inches high (such as a sign or telephone) project less than 12 inches into the perpendicular route of travel?			X			X	X					X	X				X			X			X		X					X			X		X	
	Walkway Slope:	Is the slope of the accessible route no greater than 1:20?			X	X			X				X		X			X			X			X			X			X			X			X		
4.8.1		Where the slope is greater than 1:20, does it comply with the requirements for ramps?			X			X	X			X			X			X					X			X	X			X			X				X	
		Does the curb ramp, ramp, or elevator comply with 4.7, 4.8, or 4.10?			X	X			X				X			X		X			X					X		X		X			X			X		
4.1.2(7) 4.30.1	Directional and Informational Signs:	Do signs which provide direction to, or information about, functional spaces of the building, comply with 4.30.2, 4.30.3, and 4.30.5?			X	X				X		X			X			X			X			X			X				X			X		X		

		Building No.:	2662			3802			2614			3019			3021			3119			3120			3137			3358			3623			3624			3751		
		Date:	12/20/11			11/8/11			12/12/11			12/13/11			12/13/11			10/26/11			11/3/11			11/30/11			11/15/11			11/2/11			11/2/11			10/26/11		
		Building Name:	Safford Equipment Shop Service			Grand Canyon ARFF			Parker MVD Office			Haviland Rest Area - EB			Haviland Rest Area - WB			McGuireville Rest Area - NB			McGuireville Rest Area - SB			Payson Equip. Services Shop			Painted Cliffs Rest Area			Regional Development Offices			Conference / Training Facility			Sunset Point Rest Area		
		Building Address:	US 191 Milepost 186			1542 Liberator Dr., Tusayan			29305 Mutahar St. Parker, AZ			I-40 MP 22+/-			I-40 MP 22+/-			I-17 MP 296+/-			I-17 MP 296+/-			200 N. Colcord Rd., Payson			I-40 MP 359+/-58			1901 S. Milton Ave.			1901 S. Milton Ave			I-17 MP 250+/-		
4.1.2(7) 4.30.1	Room Identification Signs:	Do signs which designate permanent rooms and spaces comply with 4.30.4, 4.30.5, and 4.30.6?			X	X				X		X			X			X			X			X			X					X		X		X		
4.1.2(7) 4.30.7	Symbols:	If provided, are the following elements identified by the International Symbol of Accessibility?																																				
		(a) accessible parking spaces;		X		X			X			X			X			X			X					X	X					X			X	X		
		(b) accessible passenger loading zones;			X	X			X					X			X			X			X			X			X			X			X			X
		(c) accessible entrances when not all are accessible;			X		X			X		X			X			X			X					X	X				X			X		X		
		(d) accessible toilet and bathing facilities when not all are accessible			X	X				X		X			X			X			X			X			X			X				X		X		
4.1.3(8)(d)	Directions to Accessible Entrance:	When not all entrances are accessible, is there directional signage indicating the accessible route to an accessible entrance?		X			X			X		X			X			X			X				X		X				X			X		X		
4.29.5	Hazardous Vehicular Areas - Detectable Warnings:	If a walk crosses or adjoins a vehicular way, and the walking surfaces are not separated by curbs or other elements, is the boundary between the areas defined by a continuous detectable warning at least 36 inches wide?			X			X			X			X			X			X			X			X			X			X					X

SURVEY FORM 4: CURB RAMPS

			N/A		X	N/A		--	N/A		X	N/A		--	N/A		--	N/A		--	N/A		--	N/A		X	N/A		--	N/A		X	N/A		X	N/A		--
Section	**Item**	**Technical Requirements**	**Yes**	**No**	**N/A**	**Yes**	**No**	**N/A**	**Yes**	**No**	**N/A**	**Yes**	**No**	**N/A**	**Yes**	**No**	**N/A**	**Yes**	**No**	**N/A**	**Yes**	**No**	**N/A**	**Yes**	**No**	**N/A**	**Yes**	**No**	**N/A**	**Yes**	**No**	**N/A**	**Yes**	**No**	**N/A**	**Yes**	**No**	**N/A**
4.7.7	Detectable Warning:	Does the curb ramp have a detectable warning?			X	X					X	X				X		X				X				X	X					X			X		X	
4.29.2	Domes:	Does the detectable warning consist of raised truncated domes?			X	X					X		X				X		X				X			X		X				X			X	X		
	Visual Contrast:	Does the detectable warning contrast visually with adjoining surfaces?			X	X					X		X				X		X				X			X	X					X			X	X		

SURVEY FORM 5: DRINKING FOUNTAINS

			N/A		X	N/A		--	N/A		--	N/A		--	N/A		--	N/A		--	N/A		--	N/A		--	N/A		--	N/A		--	N/A		--	N/A		--
Section	**Item**	**Technical Requirements**	**Yes**	**No**	**N/A**	**Yes**	**No**	**N/A**	**Yes**	**No**	**N/A**	**Yes**	**No**	**N/A**	**Yes**	**No**	**N/A**	**Yes**	**No**	**N/A**	**Yes**	**No**	**N/A**	**Yes**	**No**	**N/A**	**Yes**	**No**	**N/A**	**Yes**	**No**	**N/A**	**Yes**	**No**	**N/A**	**Yes**	**No**	**N/A**
4.1.3(10)(a) 4.15.1	Water Fountains:	Where there is only one drinking fountain on a floor, is there one accessible to wheelchair users in accordance with 4.15 and one accessible to persons who have difficulty bending or stooping (drinking fountains mounted at standard height)?			X			X		X				X			X			X			X		X				X	X			X					X
4.1.3(10)	Accessible Route:	Is the accessible drinking fountain on an accessible route?			X	X			X			X			X			X			X				X		X			X			X			X		
4.4.1	Protruding Objects:	If a wall mounted drinking fountain has a leading edge between 27 and 80 inches from the floor, does it project less than 4 inches into the pathway?			X	X			X				X			X				X			X		X				X		X			X			X		

SURVEY FORM 6: TELEPHONES

			N/A		X	N/A		X	N/A		X	N/A		X	N/A		X	N/A		X	N/A		X	N/A		X	N/A		--	N/A		X	N/A		X	N/A		--
Section	**Item**	**Technical Requirements**	**Yes**	**No**	**N/A**	**Yes**	**No**	**N/A**	**Yes**	**No**	**N/A**	**Yes**	**No**	**N/A**	**Yes**	**No**	**N/A**	**Yes**	**No**	**N/A**	**Yes**	**No**	**N/A**	**Yes**	**No**	**N/A**	**Yes**	**No**	**N/A**	**Yes**	**No**	**N/A**	**Yes**	**No**	**N/A**	**Yes**	**No**	**N/A**
4.31.7	Directories:	Are telephone books also within these reach ranges?			X			X			X			X			X			X			X			X			X			X			X		X	
4.1.3(17)(b)	Volume Controls	Is each accessible telephone equipped with a volume control?			X			X			X			X			X			X			X			X		X				X			X		X	
		Are 25% of all other public telephones equipped with volume controls			X			X			X			X			X			X			X			X			X			X			X		X	
	Cord Length:	If an acoustic coupler is used, is the telephone cord sufficiently long enough to allow connection of the text telephone to the telephone receiver?			X			X			X			X			X			X			X			X			X			X			X		X	
4.31.4 4.4.1	Protruding Objects:	If a wall-mounted telephone has leading edges between 27 and 80 inches from the floor, does it project less than 4 inches into the pathway?			X			X			X			X			X			X			X			X		X				X			X			X

		Building No.:	2662			3802			2614			3019			3021			3119			3120			3137			3358			3623			3624			3751		
		Date:	12/20/11			11/8/11			12/12/11			12/13/11			12/13/11			10/26/11			11/3/11			11/30/11			11/15/11			11/2/11			11/2/11			10/26/11		
		Building Name:	Safford Equipment Shop Service			Grand Canyon ARFF			Parker MVD Office			Haviland Rest Area - EB			Haviland Rest Area - WB			McGuireville Rest Area - NB			McGuireville Rest Area - SB			Payson Equip. Services Shop			Painted Cliffs Rest Area			Regional Development Offices			Conference / Training Facility			Sunset Point Rest Area		
		Building Address:	US 191 Milepost 186			1542 Liberator Dr., Tusayan			29305 Mutahar St. Parker, AZ			I-40 MP 22+/-			I-40 MP 22+/-			I-17 MP 296+/-			I-17 MP 296+/-			200 N. Colcord Rd., Payson			I-40 MP 359+/-58			1901 S. Milton Ave.			1901 S. Milton Ave			I-17 MP 250+/-		
		If a telephone is mounted on a post with leading edges between 27 and 80 inches high, does it project less than 12 inches into a perpendicular route of travel?			X			X			X			X			X			X			X			X			X			X			X			X	

SURVEY FORM 7: RAMPS

			N/A		X	N/A		X	N/A		--	N/A		--	N/A		X	N/A		--	N/A		X	N/A		X	N/A		X	N/A		--	N/A		--	N/A		--
Section	**Item**	**Technical Requirements**	**Yes**	**No**	**N/A**	**Yes**	**No**	**N/A**	**Yes**	**No**	**N/A**	**Yes**	**No**	**N/A**	**Yes**	**No**	**N/A**	**Yes**	**No**	**N/A**	**Yes**	**No**	**N/A**	**Yes**	**No**	**N/A**	**Yes**	**No**	**N/A**	**Yes**	**No**	**N/A**	**Yes**	**No**	**N/A**	**Yes**	**No**	**N/A**
4.8.1	Ramps:	Does each part of an accessible route with a slope greater than 1:20 comply with 4.8			X			X	X			X					X		X				X			X			X	X			X				X	
	Maximum Rise:	Is the rise for any run a maximum of 30 inches?			X			X	X			X					X		X				X			X			X	X			X				X	
	Size:	Is each landing at least as wide as the ramp and at least 60 inches long?			X			X	X					X			X	X					X			X			X	X			X				X	

SURVEY FORM 8: STAIRS

			N/A		--	N/A		--	N/A		--	N/A		X	N/A		X	N/A		X	N/A		X	N/A		X	N/A		X	N/A		--	N/A		--	N/A		--
Section	**Item**	**Technical Requirements**	**Yes**	**No**	**N/A**	**Yes**	**No**	**N/A**	**Yes**	**No**	**N/A**	**Yes**	**No**	**N/A**	**Yes**	**No**	**N/A**	**Yes**	**No**	**N/A**	**Yes**	**No**	**N/A**	**Yes**	**No**	**N/A**	**Yes**	**No**	**N/A**	**Yes**	**No**	**N/A**	**Yes**	**No**	**N/A**	**Yes**	**No**	**N/A**
4.1.3(4) 4.9.1	Stairs:	Do interior and exterior stairs connecting levels that are not connected by an elevator, ramp, or other accessible means of vertical access comply with 4.9		X				X			X			X			X			X			X			X			X			X		X		X		
4.9.2	Risers/ Treads:	In any one flight of stairs, do all the steps have uniform riser heights and tread widths?	X			X			X					X			X			X			X			X			X		X			X		X		
		Are the risers closed?		X		X				X				X			X			X			X			X			X		X			X		X		
		Are the treads at least 11 inches measured from riser to riser?	X			X					X			X			X			X			X			X			X		X		X			X		
4.9.3	Nosings:	Do the nosings project no more than 1-1/2 inches? (front edge of step)		X				X			X			X			X			X			X			X			X			X			X	X		
4.9.4 4.26	Handrails:	Do stairways have continuous handrails along both sides?		X		X			X					X			X			X			X			X			X		X			X			X	
4.9.4(2)		At ends of handrails, is there at least 12 inches of handrail parallel to the floor beyond the **top** riser?		X		X			X					X			X			X			X			X			X		X			X			X	
4.9.4(2)		At ends of handrails, is there at least one tread width of sloping handrail plus at least 12 inches of horizontal handrail beyond the **bottom** riser?		X		X			X					X			X			X			X			X			X	X				X			X	
4.9.4(2)		If the handrail extension protrudes into an accessible route, is the handrail extension rounded to be 27 inches or less from the floor in compliance with 4.4?			X			X	X					X			X			X			X			X			X		X		X			X		
4.9.4(3)		Is the clearance between walls and handrails exactly 1-1/2 inches?			X		X				X			X			X			X			X			X			X	X			X				X	
4.9.4(4)		Is the gripping surface uninterrupted by newel posts or other obstructions?		X		X			X					X			X			X			X			X			X	X			X			X		
4.9.4(6)		Are the ends of handrails rounded or returned smoothly to the floor, wall or post?			X	X			X					X			X			X			X			X			X		X			X			X	
4.9.4 4.26.2		Is the outside diameter of the handrail between 1-1/4 inches and 1-1/2 inches, and does the shape provide an equivalent gripping surface?		X		X			X					X			X			X			X			X			X	X			X			X		

Building No.:	2662	3802	2614	3019	3021	3119	3120	3137	3358	3623	3624	3751
Date:	12/20/11	11/8/11	12/12/11	12/13/11	12/13/11	10/26/11	11/3/11	11/30/11	11/15/11	11/2/11	11/2/11	10/26/11
Building Name:	Safford Equipment Shop Service	Grand Canyon ARFF	Parker MVD Office	Haviland Rest Area - EB	Haviland Rest Area - WB	McGuireville Rest Area - NB	McGuireville Rest Area - SB	Payson Equip. Services Shop	Painted Cliffs Rest Area	Regional Development Offices	Conference / Training Facility	Sunset Point Rest Area
Building Address:	US 191 Milepost 186	1542 Liberator Dr., Tusayan	29305 Mutahar St. Parker, AZ	I-40 MP 22+/-	I-40 MP 22+/-	I-17 MP 296+/-	I-17 MP 296+/-	200 N. Colcord Rd., Payson	I-40 MP 359+/-58	1901 S. Milton Ave.	1901 S. Milton Ave	I-17 MP 250+/-

SURVEY FORM 10: ENTRANCES AND EXITS
(AREAS OF RESCUE ASSISTANCE)

Section	Item	Technical Requirements	2662			3802			2614			3019			3021			3119			3120			3137			3358			3623			3624			3751		
			Yes	No	N/A	Yes	No	N/A	Yes	No	N/A	Yes	No	N/A	Yes	No	N/A	Yes	No	N/A	Yes	No	N/A	Yes	No	N/A	Yes	No	N/A	Yes	No	N/A	Yes	No	N/A	Yes	No	N/A
			N/A	--		N/A	--		N/A	--		N/A	--		N/A	--		N/A	--		N/A	--		N/A	--		N/A	--		N/A	--		N/A	--		N/A	--	
4.1.3(8)(a)	Entrances - Number Accessible:	Are at least 50% of all public entrances accessible?		X				X	X			X			X			X			X			X			X			X			X			X		
	Ground Floor Entrance:	Is at least one accessible entrance on the ground floor?		X		X			X			X			X			X			X			X			X			X			X			X		
4.1.2(7) 4.30.1	Directional Signs:	If an entrance is not accessible, are there directional signs indicating the location of the nearest accessible entrance?		X				X			X			X			X			X			X			X			X			X			X			X

SURVEY FORM 11: DOORS AND GATES

Section	Item	Technical Requirements	2662			3802			2614			3019			3021			3119			3120			3137			3358			3623			3624			3751		
			Yes	No	N/A	Yes	No	N/A	Yes	No	N/A	Yes	No	N/A	Yes	No	N/A	Yes	No	N/A	Yes	No	N/A	Yes	No	N/A	Yes	No	N/A	Yes	No	N/A	Yes	No	N/A	Yes	No	N/A
			N/A	--		N/A	--		N/A	--		N/A	--		N/A	--		N/A	--		N/A	--		N/A	--		N/A	--		N/A	--		N/A	--		N/A	--	
4.1.3(7) 4.13.1	Doors - Accessible Entrances:	Is there at least one accessible door complying with 4.13 (see below) at each accessible entrance to the building or facility?		X		X			X			X			X			X			X			X			X			X			X			X		
	Accessible Spaces:	Is there at least one accessible door complying with 4.13 (see below) at each accessible space in the facility?		X		X			X			X			X			X			X			X			X			X			X			X		
	Accessible Routes:	Does each door that is an element of an accessible route comply with 4.13 ?		X		X			X			X			X			X			X			X			X			X			X			X		
4.13.6	Maneuvering Space:	If the door is not automatic or power assisted, does it have maneuvering space relative to the direction of approach as shown in Figure 25?		X		X			X			X			X			X			X			X			X			X			X			X		
4.13.8	Thresholds:	Is the threshold at doorways no higher than 3/4 inch in height for exterior sliding doors? Is the threshold no higher than 1/2 inch for other doors? If there is a raised threshold, is it beveled at 1:2 or less?		X		X			X			X			X			X			X			X			X			X			X			X		
4.13.9	Hardware:	Are they operable without tight grasping, pinching, or twisting of the wrist? (U-shaped handles, levers, and push type mechanisms are acceptable designs.)		X		X			X			X			X			X			X			X			X			X			X			X		
		Is the force required to operate the controls no greater than 5 lbf? (This does not apply to the force required to retract latch bolts or to disengage other devices that only hold the door in a closed position.)		X		X			X			X			X			X			X			X			X			X			X			X		
4.13.10	Door Closers:	If the door has a closer, is the closer adjusted so that from an open position of 70 degrees, the door will take at least 3 seconds to move to a point 3 inches from the latch (measured to the leading edge of the door)?			X	X					X		X			X		X			X			X			X			X			X			X		

SURVEY FORM 12: BUILDING LOBBIES AND CORRIDORS
(INTERIOR ACCESSIBLE ROUTE)

Section	Item	Technical Requirements	2662			3802			2614			3019			3021			3119			3120			3137			3358			3623			3624			3751		
			Yes	No	N/A	Yes	No	N/A	Yes	No	N/A	Yes	No	N/A	Yes	No	N/A	Yes	No	N/A	Yes	No	N/A	Yes	No	N/A	Yes	No	N/A	Yes	No	N/A	Yes	No	N/A	Yes	No	N/A
			N/A	X		N/A	--		N/A	--		N/A	X		N/A	X		N/A	X		N/A	X		N/A	--		N/A	X		N/A	--		N/A	--		N/A	X	
4.3.5 4.4.1	Provisions for Persons Who are Blind - Protruding Objects:	If objects mounted to the wall have leading edges between 27 and 80 inches from the floor, do they project less than 4 inches into the pathway? (Wall mounted objects with leading edges at or below 27 inches may project any amount so long as the required clear width of an accessible route is not reduced.)			X	X			X					X			X			X			X			X			X			X			X			X

		Building No.:	2662			3802			2614			3019			3021			3119			3120			3137			3358			3623			3624			3751		
		Date:	12/20/11			11/8/11			12/12/11			12/13/11			12/13/11			10/26/11			11/3/11			11/30/11			11/15/11			11/2/11			11/2/11			10/26/11		
		Building Name:	Safford Equipment Shop Service			Grand Canyon ARFF			Parker MVD Office			Haviland Rest Area - EB			Haviland Rest Area - WB			McGuireville Rest Area - NB			McGuireville Rest Area - SB			Payson Equip. Services Shop			Painted Cliffs Rest Area			Regional Development Offices			Conference / Training Facility			Sunset Point Rest Area		
		Building Address:	US 191 Milepost 186			1542 Liberator Dr., Tusayan			29305 Mutahar St. Parker, AZ			I-40 MP 22+/-			I-40 MP 22+/-			I-17 MP 296+/-			I-17 MP 296+/-			200 N. Colcord Rd., Payson			I-40 MP 359+/-58			1901 S. Milton Ave.			1901 S. Milton Ave			I-17 MP 250+/-		
4.1.3(16) 4.30.1	Room Identification Signs:	Do signs which identify permanent rooms and spaces comply with 4.30.4, 4.30.5, and 4.30.6?			X	X				X				X			X			X			X	X					X		X			X					X

SURVEY FORM 14: ROOMS AND SPACES

			N/A		--	N/A		--	N/A		--	N/A		X	N/A		X	N/A		X	N/A		X	N/A		--	N/A		X	N/A		--	N/A		--	N/A		X
Section	Item	Technical Requirements	Yes	No	N/A	Yes	No	N/A	Yes	No	N/A	Yes	No	N/A	Yes	No	N/A	Yes	No	N/A	Yes	No	N/A	Yes	No	N/A	Yes	No	N/A	Yes	No	N/A	Yes	No	N/A	Yes	No	N/A
4.4.1	Protruding Objects:	If objects mounted to the wall have leading edges between 27 and 80 inches from the floor, do they project less than 4 inches into the accessible space?	X			X				X				X			X			X			X		X				X		X			X					X
4.1.3(16) 4.30.1	Directional and Informational Signage:	Do signs which provide direction to, or information about, functional spaces of the building comply with 4.30.2, 4.30.3, and 4.30.5?			X	X				X				X			X			X			X	X					X	X				X					X
4.1.3(16) 4.30.1	Room Identification Signage:	Do signs which designate permanent rooms and spaces comply with 4.30.4, 4.30.5, and 4.30.6?			X	X				X				X			X			X			X		X				X		X			X					X

SURVEY FORM 16: TOILET ROOMS AND BATHROOMS

			N/A		--	N/A		--	N/A		--	N/A		--	N/A		--	N/A		--	N/A		--	N/A		--	N/A		--	N/A		--	N/A		--	N/A		--
Section	Item	Technical Requirements	Yes	No	N/A	Yes	No	N/A	Yes	No	N/A	Yes	No	N/A	Yes	No	N/A	Yes	No	N/A	Yes	No	N/A	Yes	No	N/A	Yes	No	N/A	Yes	No	N/A	Yes	No	N/A	Yes	No	N/A
4.1.3(16) 4.30.1	Room Identification Signage:	Do signs which designate toilet/bath rooms comply with 4.30.4, 4.30.5, and 4.30.6?	X			X				X		X			X			X			X			X			X				X			X		X		
4.22.4 4.23.4	Toilet Stalls - Standard Stall:	If toilet stalls are provided, is at least one a standard stall at least 60 inches wide complying with 4.17 ?			X		X				X	X			X			X			X			X			X					X			X	X		
4.17.3	Size and Arrangement:	Does the size and arrangement of the standard toilet stall comply with Figure 30(a)?			X		X				X	X			X			X			X			X			X					X			X	X		
	Stall Width:	Is the stall at least 60 inches wide?			X		X				X	X			X			X			X			X			X					X			X	X		
	Door Swing:	If the stall door swings into the stall, is there at least 36 inches additional depth in the stall so that it does not encroach on the clear floor space required at the toilet and is there at least 18 inches of maneuvering space at the latch side of the door?			X		X				X	X			X					X			X			X			X			X			X	X		
4.17.6	Grab Bars In Standard Stall:	Are the grab bars in the standard stall placed as shown in Figure 30 (a), (c), and (d)?			X		X				X	X			X			X			X			X			X					X			X	X		
	Grab Bars in Additional Stall:	Do the parallel grab bars in the 36 inch wide stall comply with Figure 30(d)?			X			X			X		X			X				X		X				X		X				X			X		X	
	Lateral Transfer:	If the toilet is not in a stall and there is provision for a lateral transfer (no lavatory alongside the toilet), is there a clear floor space at least 60 inches wide by 56 inches long?			X	X					X			X			X			X			X			X			X			X		X				X
4.16.5; 4.27.4	Toilet Flush Controls:	Are they mounted on the wide side of the toilet where the clear floor space is provided?		X		X				X		X			X					X			X	X			X			X			X			X		
4.16.6	Toilet Paper Dispenser:	Is the paper dispenser mounted below the grab bar no more than 36 inches from the back wall and at least 19 inches from the floor?	X			X			X				X			X		X			X			X			X			X			X			X		
		Is the dispenser located so that it does not obstruct the use of the grab bar?	X			X			X				X			X		X			X			X			X			X			X				X	
4.2.4.3	Width Between Shields:	If urinal shields are provided and they do not extend beyond the front edge of the urinal rim, is there at least 29 inches between the two panels?			X			X			X		X			X		X			X			X			X					X			X	X		
4.19.4	Pipe Shielding:	Are hot water pipes and drain pipes insulated or otherwise configured to protect against contact?	X			X				X			X			X			X			X			X			X			X			X		X		

		Building No.:	2662			3802			2614			3019			3021			3119			3120			3137			3358			3623			3624			3751		
		Date:	12/20/11			11/8/11			12/12/11			12/13/11			12/13/11			10/26/11			11/3/11			11/30/11			11/15/11			11/2/11			11/2/11			10/26/11		
		Building Name:	Safford Equipment Shop Service			Grand Canyon ARFF			Parker MVD Office			Haviland Rest Area - EB			Haviland Rest Area - WB			McGuireville Rest Area - NB			McGuireville Rest Area - SB			Payson Equip. Services Shop			Painted Cliffs Rest Area			Regional Development Offices			Conference / Training Facility			Sunset Point Rest Area		
		Building Address:	US 191 Milepost 186			1542 Liberator Dr., Tusayan			29305 Mutahar St. Parker, AZ			I-40 MP 22+/-			I-40 MP 22+/-			I-17 MP 296+/-			I-17 MP 296+/-			200 N. Colcord Rd., Payson			I-40 MP 359+/-58			1901 S. Milton Ave.			1901 S. Milton Ave			I-17 MP 250+/-		
		If the valve is self-closing, does it remain open for at least 10 seconds?	X			X					X		X			X			X			X				X		X				X			X	X		
4.27.3	Dispenser Height:	If a forward approach is provided, is the highest operable part no higher than 48 inches?		X		X			X			X			X			X			X			X			X			X			X			X		
		If a parallel approach is provided, is the highest operable part no higher than 54 inches?		X		X			X			X			X			X			X			X			X			X			X			X		
4.23.9	Medicine Cabinet:	If medicine cabinets are provided, does at least one have a usable shelf no higher than 44 inches from the floor?		X				X			X			X			X			X			X			X			X			X			X			X
4.23.8	Bathtubs and Showers:	Where bathtubs or showers are provided, does at least one comply with 4.20 or 4.21?			X		X				X			X			X			X			X	X					X			X			X			X

SURVEY FORM 17: BATHTUBS AND SHOWERS

			N/A		X	N/A		--	N/A		X	N/A		X	N/A		X	N/A		X	N/A		X	N/A		--	N/A		X	N/A		X	N/A		X	N/A		X
Section	**Item**	**Technical Requirements**	**Yes**	**No**	**N/A**	**Yes**	**No**	**N/A**	**Yes**	**No**	**N/A**	**Yes**	**No**	**N/A**	**Yes**	**No**	**N/A**	**Yes**	**No**	**N/A**	**Yes**	**No**	**N/A**	**Yes**	**No**	**N/A**	**Yes**	**No**	**N/A**	**Yes**	**No**	**N/A**	**Yes**	**No**	**N/A**	**Yes**	**No**	**N/A**
4.23.8 4.21.1	Showers:	Where showers are provided, does at least one comply with 4.21			X		X				X			X			X			X			X	X					X			X			X			X
4.21.2	Transfer Type Showers:	If the shower stall is a transfer type shown in Figure 35(a), is it exactly 36 by 36 inches?			X			X			X			X			X			X			X		X				X			X			X			X

SURVEY FORM 19: SIGNAGE

			N/A		X	N/A		--	N/A		--	N/A		--	N/A		--	N/A		--	N/A		--	N/A		--	N/A		X	N/A		--	N/A		--	N/A		--
Section	**Item**	**Technical Requirements**	**Yes**	**No**	**N/A**	**Yes**	**No**	**N/A**	**Yes**	**No**	**N/A**	**Yes**	**No**	**N/A**	**Yes**	**No**	**N/A**	**Yes**	**No**	**N/A**	**Yes**	**No**	**N/A**	**Yes**	**No**	**N/A**	**Yes**	**No**	**N/A**	**Yes**	**No**	**N/A**	**Yes**	**No**	**N/A**	**Yes**	**No**	**N/A**
4.1.2(7) 4.1.3(16) 4.30.1	Directional and Informational Signs:	Do signs which provide direction to, or information about, functional spaces of the building comply with 4.30.2, 4.30.3, and 4.30.5 (See below)?			X	X				X		X			X			X			X			X			X			X				X		X		
4.30.2	Character Proportion:	Do the letters and numbers on such signs have a width to height ratio between 3:5 and 1:1; and a stroke width-to-height ratio between 1:5 and 1:10?			X	X				X		X			X			X			X			X			X			X				X		X		
4.30.3	Character Size:	Are the characters on such signs sized according to viewing distance with characters on overhead signs at least 3 inches high?			X	X				X		X			X			X			X			X			X			X				X		X		
4.1.2(7) 4.1.3(16) 4.30.1	Room and Space Identification Signs:	Do signs which designate permanent rooms and spaces comply with 4.30.4, 4.30.5, and 4.30.6 (See below)?			X	X				X		X			X			X			X				X		X				X			X		X		
4.30.4	Raised and Braille Characters:	Are the characters on such signs raised and accompanied by Grade II Braille?		X		X				X		X			X			X			X			X			X				X			X		X		
	Pictograms:	If a pictorial symbol (pictogram) is used to designate permanent rooms and spaces, is the pictogram accompanied by the equivalent verbal description placed directly below the pictogram?		X		X				X		X			X			X			X			X			X				X				X	X		
		Is the border dimension of the pictogram at least 6 inches high?	X			X				X		X			X			X			X			X			X			X					X	X		
4.30.6	Mounting Location:	Are such signs mounted on the wall adjacent to the latch side of the door?		X		X				X		X			X			X				X		X				X			X				X		X	
	Mounting Height:	Are such signs mounted with their centerline 60 inches above the ground surface?	X			X			X			X			X			X			X			X			X				X				X	X		
	Approach:	Can a person approach to within 3 inches of such signs without encountering protruding objects or standing within the swing of the door?		X		X				X		X			X			X			X			X			X				X				X	X		

Building No.:	2662	3802	2614	3019	3021	3119	3120	3137	3358	3623	3624	3751
Date:	12/20/11	11/8/11	12/12/11	12/13/11	12/13/11	10/26/11	11/3/11	11/30/11	11/15/11	11/2/11	11/2/11	10/26/11
Building Name:	Safford Equipment Shop Service	Grand Canyon ARFF	Parker MVD Office	Haviland Rest Area - EB	Haviland Rest Area - WB	McGuireville Rest Area - NB	McGuireville Rest Area - SB	Payson Equip. Services Shop	Painted Cliffs Rest Area	Regional Development Offices	Conference / Training Facility	Sunset Point Rest Area
Building Address:	US 191 Milepost 186	1542 Liberator Dr., Tusayan	29305 Mutahar St. Parker, AZ	I-40 MP 22+/-	I-40 MP 22+/-	I-17 MP 296+/-	I-17 MP 296+/-	200 N. Colcord Rd., Payson	I-40 MP 359+/-58	1901 S. Milton Ave.	1901 S. Milton Ave	I-17 MP 250+/-

SURVEY FORM 21: DETECTABLE WARNINGS

			2662			3802			2614			3019			3021			3119			3120			3137			3358			3623			3624			3751		
			N/A		X	N/A		--	N/A		X	N/A		X	N/A		X	N/A		--	N/A		--	N/A		X	N/A		--	N/A		X	N/A		X	N/A		--
Section	**Item**	**Technical Requirements**	**Yes**	**No**	**N/A**	**Yes**	**No**	**N/A**	**Yes**	**No**	**N/A**	**Yes**	**No**	**N/A**	**Yes**	**No**	**N/A**	**Yes**	**No**	**N/A**	**Yes**	**No**	**N/A**	**Yes**	**No**	**N/A**	**Yes**	**No**	**N/A**	**Yes**	**No**	**N/A**	**Yes**	**No**	**N/A**	**Yes**	**No**	**N/A**
4.7.7	Curb Ramps:	Do curb ramps on a site have a detectable warning complying with 4.29.2 (see below) extending the full width and depth of the curb ramp? (Detectable warnings are not required on the flared sides.)			X	X					X			X			X		X			X				X		X				X			X	X		
4.29.2	Detectable Warnings - Pattern:	Do detectable warnings consist of raised truncated domes with a nominal diameter of 0.9 inches, a nominal height of 0.2 inches, and a nominal center-to-center spacing of 2.35 inches?			X	X					X			X			X		X			X				X		X				X			X	X		
	Contrast:	Do detectable warnings contrast visually with adjoining surfaces (light-on-dark or dark-on-light)?			X	X					X			X			X		X			X				X	X					X			X	X		
		Is the material used to provide contrast an integral part of the walking surface?			X	X					X			X			X			X		X				X	X					X			X	X		

Building No.:	1673	1762	1772	1800	1801	2066 & 2067	2124	2586	2612	2639	2652	2659
Date:	10/24/11	10/21/11	10/21/11	10/14/11	10/14/11	11/25/11	12/7/11	12/20/11	12/5/11	11/28/22	11/28/11	12/6/11
Building Name:	Avondale Construction Office	Phoenix Fuels Management Office	Phoenix Fleet Management Office	Phoenix Traffic Operation Office	Phoenix Maintenance District Permits	Casa Grande Construction Office	Douglas MVD Office	Wilcox Construction (Lab) Office	Santa Rita Construction Office	Gila Bend Maintenance Office	San Luis Port of Entry	Southern Trafic Operation Center
Building Address:	114 East Western Avenue; Phoenix	2350 South 22nd Avenue; Phoenix	2350 South 22nd Avenue; Phoenix	2140 West Hilton Avenue, Phoeinix	2140 West Hilton Avenue, Phoenix	15614 West Boxelder Drive; Cas Grande	2050 North Hwy, 191, Douglas, AZ	SR 186, Milepost 329	I-10 / I-19 Interchange	1300 East Pima, Gila Bend	Avenue E, ASH, I-8	I-10 / I-19 Interchange

SURVEY FORM 1: PARKING

			N/A		--	N/A		--	N/A		--	N/A		--	N/A		--	N/A		--	N/A		--	N/A		--	N/A		--	N/A		--	N/A		--	N/A		--
		Total Parking Spaces in Area/Lot:	32			18			22			30			10			15			33			0			30			11			35			30		
		Number Accessible:	3			1			1			2			1			0			6			0			2			1			2			2		
		Number Van Accessible:	0			0			0			0			0			0			1			0			0			0			0			0		
Section	**Item**	**Technical Requirements**	**Yes**	**No**	**N/A**	**Yes**	**No**	**N/A**	**Yes**	**No**	**N/A**	**Yes**	**No**	**N/A**	**Yes**	**No**	**N/A**	**Yes**	**No**	**N/A**	**Yes**	**No**	**N/A**	**Yes**	**No**	**N/A**	**Yes**	**No**	**N/A**	**Yes**	**No**	**N/A**	**Yes**	**No**	**N/A**	**Yes**	**No**	**N/A**
4.1.2(5); 4.6.1	Number - Accessible Parking Spaces:	Where parking spaces are provided for self-parking, are the required number of accessible parking spaces complying with 4.6 (1:25) provided?	X			X			X			X			X				X		X					X	X			X			X			X		
	Van Accessible Spaces:	Is one in every eight accessible parking spaces (but not less than one) designated "van accessible?"		X			X			X			X			X			X		X					X		X			X			X			X	
4.6.2	**Location -** Serving Accessible Entrance:	Are accessible parking spaces which serve a particular building on the shortest accessible route of travel to the building's accessible entrance?		X		X			X			X			X					X	X					X	X			X			X			X		
	Separate Parking Facility:	Where a parking facility does not serve a particular building, are the accessible parking spaces on the shortest accessible route of travel to the parking facility's accessible entrance?			X			X			X			X			X			X			X			X			X			X			X			X	
4.1.2(5)(a)	Width of Car Access Aisles:	Are all other access aisles at least 60 inches wide?	X			X			X					X		X		X			X					X	X			X			X			X		
4.6.3 4.3	Access Aisle and Accessible Route:	Does each access aisle connect directly to an accessible route complying with 4.3?		X		X			X			X			X			X			X					X	X			X			X			X		
4.6.4	Signs - Accessible Parking Spaces:	Does each accessible parking space have a vertical sign, unobscured by parked vehicles, showing the International Symbol of Accessibility?	X			X			X			X				X				X	X					X	X				X		X			X		

SURVEY FORM 3: EXTERIOR ACCESSIBLE ROUTES

			N/A		--	N/A		--	N/A		--	N/A		--	N/A		--	N/A		--	N/A		--	N/A		X	N/A		--	N/A		--	N/A		--	N/A		--

Accessible Route to be Surveyed:

From: Accessible Parking Spaces

To: Ramp connecting to the building

Section	**Item**	**Technical Requirements**	**Yes**	**No**	**N/A**	**Yes**	**No**	**N/A**	**Yes**	**No**	**N/A**	**Yes**	**No**	**N/A**	**Yes**	**No**	**N/A**	**Yes**	**No**	**N/A**	**Yes**	**No**	**N/A**	**Yes**	**No**	**N/A**	**Yes**	**No**	**N/A**	**Yes**	**No**	**N/A**	**Yes**	**No**	**N/A**	**Yes**	**No**	**N/A**
	Walkway Slope:	Is the slope of the accessible route no greater than 1:20?	X			X			X			X			X			X				X				X	X			X			X			X		
4.8.1		Where the slope is greater than 1:20, does it comply with the requirements for ramps?	X			X			X					X	X				X			X				X	X			X			X			X		
4.3.8 4.5.2	Changes in Level:	When walkway levels change, is the vertical difference between them less than 1/4 inch? OR Are changes in level between 1/4 inch and 1/2 inch beveled with a slope no greater than 1:2?	X			X			X				X		X		X			X	X					X	X						X			X		
		Does the curb ramp, ramp, or elevator comply with 4.7, 4.8, or 4.10?			X	X			X					X	X				X			X				X		X		X			X			X		
4.1.3(8)(d)	Directions to Accessible Entrance:	When not all entrances are accessible, is there directional signage indicating the accessible route to an accessible entrance?			X			X			X			X		X				X			X			X			X			X			X			X

SURVEY FORM 4: CURB RAMPS

			N/A		X	N/A		X	N/A		X	N/A		X	N/A		X	N/A		X	N/A		--	N/A		X	N/A		X	N/A		X	N/A		--	N/A		X
Section	**Item**	**Technical Requirements**	**Yes**	**No**	**N/A**	**Yes**	**No**	**N/A**	**Yes**	**No**	**N/A**	**Yes**	**No**	**N/A**	**Yes**	**No**	**N/A**	**Yes**	**No**	**N/A**	**Yes**	**No**	**N/A**	**Yes**	**No**	**N/A**	**Yes**	**No**	**N/A**	**Yes**	**No**	**N/A**	**Yes**	**No**	**N/A**	**Yes**	**No**	**N/A**
4.7.2 4.8.2	Slope:	Is the slope of the curb ramp 1:12 or less in new construction?			X			X			X			X			X			X		X				X			X			X	X					X
4.7.7	Detectable Warning:	Does the curb ramp have a detectable warning?			X			X			X			X			X			X		X				X			X			X	X					X

Building No.:	1673	1762	1772	1800	1801	2066 & 2067	2124	2586	2612	2639	2652	2659
Date:	10/24/11	10/21/11	10/21/11	10/14/11	10/14/11	11/25/11	12/7/11	12/20/11	12/5/11	11/28/22	11/28/11	12/6/11
Building Name:	Avondale Construction Office	Phoenix Fuels Management Office	Phoenix Fleet Management Office	Phoenix Traffic Operation Office	Phoenix Maintenance District Permits	Casa Grande Construction Office	Douglas MVD Office	Wilcox Construction (Lab) Office	Santa Rita Construction Office	Gila Bend Maintenance Office	San Luis Port of Entry	Southern Trafic Operation Center
Building Address:	114 East Western Avenue; Phoenix	2350 South 22nd Avenue; Phoenix	2350 South 22nd Avenue; Phoenix	2140 West Hilton Avenue, Phoeinix	2140 West Hilton Avenue, Phoenix	15614 West Boxelder Drive; Cas Grande	2050 North Hwy, 191, Douglas, AZ	SR 186, Milepost 329	I-10 / I-19 Interchange	1300 East Pima, Gila Bend	Avenue E, ASH, I-8	I-10 / I-19 Interchange

SURVEY FORM 5: DRINKING FOUNTAINS

			1673			1762			1772			1800			1801			2066 & 2067			2124			2586			2612			2639			2652			2659		
			N/A		X	N/A		X	N/A		X	N/A		X	N/A		X	N/A		--	N/A		--	N/A		X	N/A		--	N/A		X	N/A		--	N/A		--
Section	Item	Technical Requirements	Yes	No	N/A	Yes	No	N/A	Yes	No	N/A	Yes	No	N/A	Yes	No	N/A	Yes	No	N/A	Yes	No	N/A	Yes	No	N/A	Yes	No	N/A	Yes	No	N/A	Yes	No	N/A	Yes	No	N/A
4.15.5(1)	Fountains With Knee Space:	If the unit is wall- or post-mounted, is there a clear knee space between the bottom of the apron and the floor which is at least 27 inches high, 30 inches wide, and 17 to 19 inches deep?			X			X			X			X			X		X		X					X	X			X			X			X		
4.15.3	Location	Is the spout at the front of the unit, with a water flow trajectory parallel or nearly parallel to the front edge?			X			X			X			X			X	X			X					X	X				X		X			X		
	Water Flow	If the fountain has a round or oval bowl, is the water flow within 3 inches of the front edge of the fountain?			X			X			X			X			X	X			X					X	X				X		X			X		

SURVEY FORM 7: RAMPS

			1673			1762			1772			1800			1801			2066 & 2067			2124			2586			2612			2639			2652			2659		
			N/A		X	N/A		--	N/A		--	N/A		X	N/A		--	N/A		--	N/A		X	N/A		--	N/A		--	N/A		--	N/A		X	N/A		--
Section	Item	Technical Requirements	Yes	No	N/A	Yes	No	N/A	Yes	No	N/A	Yes	No	N/A	Yes	No	N/A	Yes	No	N/A	Yes	No	N/A	Yes	No	N/A	Yes	No	N/A	Yes	No	N/A	Yes	No	N/A	Yes	No	N/A
4.8.1	Ramps:	Does each part of an accessible route with a slope greater than 1:20 comply with 4.8			X	X			X					X	X				X				X		X			X		X					X		X	
4.8.2	Running Slope:	Is the ramp slope 1:12 or less?			X	X			X					X	X				X				X		X			X		X					X		X	
	Landings with Doors:	If a doorway is located on a landing, does the area in front of the door comply with the maneuvering space requirements for doors?			X			X			X			X	X			X					X			X		X				X			X		X	
4.8.7	Edge Protection:	If a ramp or landing has a drop off, does it have a minimum 2 inch curb, a wall, railings, or projecting surfaces which prevent people from falling off?			X	X			X					X	X			X					X		X		X					X			X	X		
4.8.5	Handrails:	If the ramp rises more than 6 inches or is longer than 72 inches, does it have a handrail on each side? (Handrails are not required on curb ramps or adjacent to seating in assembly areas.)			X		X			X				X	X				X				X	X				X		X					X	X		
4.8.5 4.26.2	Clearance:	Is the clear space between handrails and walls exactly 1-1/2 inches?			X			X			X			X	X					X			X			X			X			X			X		X	

SURVEY FORM 8: STAIRS

			1673			1762			1772			1800			1801			2066 & 2067			2124			2586			2612			2639			2652			2659		
			N/A		X	N/A		--	N/A		--	N/A		X	N/A		--	N/A		--	N/A		X	N/A		--	N/A		--	N/A		--	N/A		X	N/A		X
Section	Item	Technical Requirements	Yes	No	N/A	Yes	No	N/A	Yes	No	N/A	Yes	No	N/A	Yes	No	N/A	Yes	No	N/A	Yes	No	N/A	Yes	No	N/A	Yes	No	N/A	Yes	No	N/A	Yes	No	N/A	Yes	No	N/A
4.1.3(4) 4.9.1	Stairs:	Do interior and exterior stairs connecting levels that are not connected by an elevator, ramp, or other accessible means of vertical access comply with 4.9			X		X			X				X	X				X				X		X		X					X			X			X
		Are the risers closed?			X		X			X				X	X				X				X		X			X		X					X			X

SURVEY FORM 11: DOORS AND GATES

			1673			1762			1772			1800			1801			2066 & 2067			2124			2586			2612			2639			2652			2659		
			N/A		--	N/A		--	N/A		--	N/A		--	N/A		--	N/A		--	N/A		--	N/A		--	N/A		--	N/A		--	N/A		--	N/A		--
Section	Item	Technical Requirements	Yes	No	N/A	Yes	No	N/A	Yes	No	N/A	Yes	No	N/A	Yes	No	N/A	Yes	No	N/A	Yes	No	N/A	Yes	No	N/A	Yes	No	N/A	Yes	No	N/A	Yes	No	N/A	Yes	No	N/A
	Accessible Spaces:	Is there at least one accessible door complying with 4.13 (see below) at each accessible space in the facility?	X			X			X				X		X			X			X			X			X			X			X			X		
	Accessible Routes:	Does each door that is an element of an accessible route comply with 4.13 ?	X			X			X				X		X			X			X			X			X			X			X			X		
4.13.8	Thresholds:	Is the threshold at doorways no higher than 3/4 inch in height for exterior sliding doors? Is the threshold no higher than 1/2 inch for other doors? If there is a raised threshold, is it beveled at 1:2 or less?	X			X			X				X		X			X			X			X			X			X			X			X		

		Building No.:	1673			1762			1772			1800			1801			2066 & 2067			2124			2586			2612			2639			2652			2659		
		Date:	10/24/11			10/21/11			10/21/11			10/14/11			10/14/11			11/25/11			12/7/11			12/20/11			12/5/11			11/28/22			11/28/11			12/6/11		
		Building Name:	Avondale Construction Office			Phoenix Fuels Management Office			Phoenix Fleet Management Office			Phoenix Traffic Operation Office			Phoenix Maintenance District Permits			Casa Grande Construction Office			Douglas MVD Office			Wilcox Construction (Lab) Office			Santa Rita Construction Office			Gila Bend Maintenance Office			San Luis Port of Entry			Southern Trafic Operation Center		
		Building Address:	114 East Western Avenue; Phoenix			2350 South 22nd Avenue; Phoenix			2350 South 22nd Avenue; Phoenix			2140 West Hilton Avenue, Phoeinix			2140 West Hilton Avenue, Phoenix			15614 West Boxelder Drive; Cas Grande			2050 North Hwy, 191, Douglas, AZ			SR 186, Milepost 329			I-10 / I-19 Interchange			1300 East Pima, Gila Bend			Avenue E, ASH, I-8			I-10 / I-19 Interchange		
4.13.10	Door Closers:	If the door has a closer, is the closer adjusted so that from an open position of 70 degrees, the door will take at least 3 seconds to move to a point 3 inches from the latch (measured to the leading edge of the door)?	X			X			X					X	X			X					X	X				X		X			X			X		

SURVEY FORM 12: BUILDING LOBBIES AND CORRIDORS (INTERIOR ACCESSIBLE ROUTE)

			N/A		--	N/A		--	N/A		--	N/A		--	N/A		--	N/A		--	N/A		--	N/A		--	N/A		--	N/A		--	N/A		--	N/A		X
Section	**Item**	**Technical Requirements**	**Yes**	**No**	**N/A**	**Yes**	**No**	**N/A**	**Yes**	**No**	**N/A**	**Yes**	**No**	**N/A**	**Yes**	**No**	**N/A**	**Yes**	**No**	**N/A**	**Yes**	**No**	**N/A**	**Yes**	**No**	**N/A**	**Yes**	**No**	**N/A**	**Yes**	**No**	**N/A**	**Yes**	**No**	**N/A**	**Yes**	**No**	**N/A**
4.1.3(1) 4.3.2(3)	Accessible Route:	Is there an accessible route connecting accessible entrances with all accessible elements and spaces within the building?	X			X			X			X			X			X				X		X			X			X					X			X
4.3.3	Width - General:	Is the accessible route at least 36 inches wide except at doorways?	X			X			X			X			X			X				X		X			X			X			X					X

SURVEY FORM 14: ROOMS AND SPACES

			N/A		--	N/A		--	N/A		--	N/A		--	N/A		--	N/A		--	N/A		--	N/A		--	N/A		--	N/A		--	N/A		--	N/A		--
Section	**Item**	**Technical Requirements**	**Yes**	**No**	**N/A**	**Yes**	**No**	**N/A**	**Yes**	**No**	**N/A**	**Yes**	**No**	**N/A**	**Yes**	**No**	**N/A**	**Yes**	**No**	**N/A**	**Yes**	**No**	**N/A**	**Yes**	**No**	**N/A**	**Yes**	**No**	**N/A**	**Yes**	**No**	**N/A**	**Yes**	**No**	**N/A**	**Yes**	**No**	**N/A**
4.3.3	Aisles:	Are aisles between permanently built-in case work or partitions at least 36 inches wide (or at least 32 inches wide for a length not to exceed 24 inches)? (See Figure 8(e))	X			X			X			X				X		X			X			X			X			X			X			X		
		Where the aisle makes a U-turn around an obstacle which is less than 48 inches wide, is the pathway width at least 42 inches on the approach and 48 inches in the turn? (See Figure 7(b))	X			X			X			X				X		X			X			X			X			X			X			X		
4.3.4	Passing Space:	If the aisles between permanently built-in casework or partitions are less than 60 inches wide, are there passing spaces at least 60 inches wide and 60 inches long or intersecting aisles allowing passing at reasonable intervals not exceeding 200 feet?	X			X			X					X			X	X			X			X			X			X			X				X	
4.1.3(5) 4.3.8 4.5.2	Level Changes:	When walkway levels change, is the vertical difference less than 1/4 inch? OR Are changes in level between 1/4 inch and 1/2 inch beveled with a slope no greater than 1:2?	X			X			X				X		X			X					X	X			X			X			X			X		
4.1.3(16) 4.30.1	Room Identification Signage:	Do signs which designate permanent rooms and spaces comply with 4.30.4, 4.30.5, and 4.30.6?			X			X			X			X			X		X		X			X				X			X		X				X	
4.1.3(12) 4.25.1	Storage:	Does at least one of each type of fixed or built-in storage facilities (e.g., cabinets, shelves, closets, and drawers) comply with 4.25 (See below)? (Additional storage may be provided outside the dimensions required by 4.25. Accessible reach range requirements do not apply to shelves or display units allowing self-service by customers in mercantile occupancies but they must be located on an accessible route.)			X			X			X			X		X				X			X				X			X			X			X			X
4.25.2 4.2.4	Clear Floor Space:	Is there a clear floor space at least 30 by 48 inches at fixed or built-in storage facilities which allows for either a forward or parallel approach?			X			X			X			X		X				X			X						X			X			X			X
4.25.3 4.2.5 4.2.6	Side Reach:	If a parallel approach is provided, are clothes rods and shelves between 9 and 54 inches from the floor?			X			X			X			X		X				X			X			X			X			X			X			X
4.3.3	Aisles:	Are the aisles leading up to and between tables at least 36 inches wide?	X			X			X			X				X		X			X			X						X	X			X					X

Building No.:	1673	1762	1772	1800	1801	2066 & 2067	2124	2586	2612	2639	2652	2659
Date:	10/24/11	10/21/11	10/21/11	10/14/11	10/14/11	11/25/11	12/7/11	12/20/11	12/5/11	11/28/22	11/28/11	12/6/11
Building Name:	Avondale Construction Office	Phoenix Fuels Management Office	Phoenix Fleet Management Office	Phoenix Traffic Operation Office	Phoenix Maintenance District Permits	Casa Grande Construction Office	Douglas MVD Office	Wilcox Construction (Lab) Office	Santa Rita Construction Office	Gila Bend Maintenance Office	San Luis Port of Entry	Southern Trafic Operation Center
Building Address:	114 East Western Avenue; Phoenix	2350 South 22nd Avenue; Phoenix	2350 South 22nd Avenue; Phoenix	2140 West Hilton Avenue, Phoeinix	2140 West Hilton Avenue, Phoenix	15614 West Boxelder Drive; Cas Grande	2050 North Hwy, 191, Douglas, AZ	SR 186, Milepost 329	I-10 / I-19 Interchange	1300 East Pima, Gila Bend	Avenue E, ASH, I-8	I-10 / I-19 Interchange

SURVEY FORM 16: TOILET ROOMS AND BATHROOMS

Section	Item	Technical Requirements	1673 Yes	1673 No	1673 N/A	1762 Yes	1762 No	1762 N/A	1772 Yes	1772 No	1772 N/A	1800 Yes	1800 No	1800 N/A	1801 Yes	1801 No	1801 N/A	2066 & 2067 Yes	2066 & 2067 No	2066 & 2067 N/A	2124 Yes	2124 No	2124 N/A	2586 Yes	2586 No	2586 N/A	2612 Yes	2612 No	2612 N/A	2639 Yes	2639 No	2639 N/A	2652 Yes	2652 No	2652 N/A	2659 Yes	2659 No	2659 N/A
4.1.3(16) 4.30.1	Room Identification Signage:	Do signs which designate toilet/bath rooms comply with 4.30.4, 4.30.5, and 4.30.6?			X		X			X				X		X		X			X			X			X			X			X			X		
4.16.4	Grab Bars for Toilets Not in Stalls:	If the toilet is not in a stall, is the back grab bar at least 36 inches long with the end closer to the side wall mounted at least 12 inches from the centerline of the toilet?	X			X			X			X				X			X		X			X			X					X	X			X		
		Is the side grab bar at least 42 inches long and mounted a maximum 12 inches from the back wall?	X			X			X			X			X				X		X			X			X					X	X			X		
		Do the grab bars comply with 4.26.2, 4.26.3, or 4.26.4	X			X			X			X				X			X		X			X			X					X	X			X		
4.26.2	Wall Clearance:	Is the space between the grab bar and the wall exactly 1-1/2 inches?	X			X			X			X			X				X		X			X			X			X			X			X		
4.22.4 4.23.4	Accessible Toilets:	Is the centerline of the toilet 18 inches from a wall or partition?	X			X			X			X				X		X			X			X			X			X			X			X		
4.16.3	Toilet Seat:	Is the top of the toilet seat between 17 and 19 inches from the floor?	X			X			X				X		X			X			X			X			X			X			X			X		
4.16.5; 4.27.4	Toilet Flush Controls:	Are they mounted on the wide side of the toilet where the clear floor space is provided?	X				X			X		X				X		X			X				X		X			X				X				X
4.16.6	Toilet Paper Dispenser:	Is the paper dispenser mounted below the grab bar no more than 36 inches from the back wall and at least 19 inches from the floor?	X			X			X			X			X			X			X			X			X			X				X		X		
4.18.3 4.2.4	Clear Floor Space:	Is there a clear floor space at least 30 by 48 inches which allows a forward approach to the urinal?	X				X			X				X			X	X			X					X	X			X			X			X		
4.18.4 4.27.4	Urinal Flush Controls:	Are the flush controls automatic or operable with one hand without tight grasping, pinching, or twisting of the wrist?	X				X			X				X			X	X			X					X	X					X			X	X		
4.19.5 4.27.4	Faucet Operation:	Can the faucet be operated with one hand without tight grasping, pinching, or twisting of the wrist?	X			X			X				X		X			X			X			X			X			X			X				X	
		Is the force required to operate controls no greater than 5 lbf?	X			X			X				X		X			X			X					X	X					X	X				X	
4.27.3	Dispenser Height:	If a forward approach is provided, is the highest operable part no higher than 48 inches?	X			X			X			X				X		X			X				X		X			X			X			X		
		If a parallel approach is provided, is the highest operable part no higher than 54 inches?	X			X			X					X			X	X			X				X		X			X			X			X		
4.23.9	Medicine Cabinet:	If medicine cabinets are provided, does at least one have a usable shelf no higher than 44 inches from the floor?			X			X			X			X		X				X			X			X			X			X	X					X
4.2.4	Clear Floor Space:	Is there a clear floor space at least 30 by 48 inches in front of the medicine cabinet allowing either a forward or parallel approach to the medicine cabinet?			X			X			X	X				X				X			X			X			X			X	X					X
4.1.3(14) 4.28.1	Alarms:	Where alarms are provided, do they comply with 4.28?		X		X			X			X					X	X			X			X					X		X		X					X

Building No.:	1673	1762	1772	1800	1801	2066 & 2067	2124	2586	2612	2639	2652	2659
Date:	10/24/11	10/21/11	10/21/11	10/14/11	10/14/11	11/25/11	12/7/11	12/20/11	12/5/11	11/28/22	11/28/11	12/6/11
Building Name:	Avondale Construction Office	Phoenix Fuels Management Office	Phoenix Fleet Management Office	Phoenix Traffic Operation Office	Phoenix Maintenance District Permits	Casa Grande Construction Office	Douglas MVD Office	Wilcox Construction (Lab) Office	Santa Rita Construction Office	Gila Bend Maintenance Office	San Luis Port of Entry	Southern Trafic Operation Center
Building Address:	114 East Western Avenue; Phoenix	2350 South 22nd Avenue; Phoenix	2350 South 22nd Avenue; Phoenix	2140 West Hilton Avenue, Phoeinix	2140 West Hilton Avenue, Phoenix	15614 West Boxelder Drive; Cas Grande	2050 North Hwy, 191, Douglas, AZ	SR 186, Milepost 329	I-10 / I-19 Interchange	1300 East Pima, Gila Bend	Avenue E, ASH, I-8	I-10 / I-19 Interchange

SURVEY FORM 19: SIGNAGE

			1673			1762			1772			1800			1801			2066 & 2067			2124			2586			2612			2639			2652			2659		
			N/A		X	N/A		X	N/A		X	N/A		X	N/A		X	N/A		--	N/A		--	N/A		--	N/A		--	N/A		--	N/A		--	N/A		--
Section	Item	Technical Requirements	Yes	No	N/A	Yes	No	N/A	Yes	No	N/A	Yes	No	N/A	Yes	No	N/A	Yes	No	N/A	Yes	No	N/A	Yes	No	N/A	Yes	No	N/A	Yes	No	N/A	Yes	No	N/A	Yes	No	N/A
4.1.2(7) 4.1.3(16) 4.30.1	Directional and Informational Signs:	Do signs which provide direction to, or information about, functional spaces of the building comply with 4.30.2, 4.30.3, and 4.30.5 (See below)?			X			X			X			X			X		X		X			X					X	X			X					X
4.30.6	Mounting Location:	Are such signs mounted on the wall adjacent to the latch side of the door?			X			X			X			X			X		X		X			X				X			X		X				X	

SURVEY FORM 20: ALARMS

			1673			1762			1772			1800			1801			2066 & 2067			2124			2586			2612			2639			2652			2659		
			N/A		--	N/A		--	N/A		--	N/A		X	N/A		X	N/A		--	N/A		--	N/A		--	N/A		--	N/A		X	N/A		--	N/A		--
Section	Item	Technical Requirements	Yes	No	N/A	Yes	No	N/A	Yes	No	N/A	Yes	No	N/A	Yes	No	N/A	Yes	No	N/A	Yes	No	N/A	Yes	No	N/A	Yes	No	N/A	Yes	No	N/A	Yes	No	N/A	Yes	No	N/A
4.28.1	Visual Alarms - Areas Required:	Are visual alarms provided in all general use areas of the building such as meeting rooms, hallways, and lobbies?		X		X			X					X			X	X			X			X			X					X	X			X		
4.28.3	Location:	Are all portions of any room, space, corridor or hallway that is required to have a visual signal appliance no more than 50 feet from the signal (in the horizontal plane)?	X				X			X				X			X	X			X			X			X					X	X			X		
		In large rooms and spaces exceeding 100 feet across which do not have partitions or obstructions 6 feet or higher above the finish floor, are the visual signal appliances spaced around the perimeter no less than 100 feet apart or are they suspended from the ceiling?		X			X			X				X			X			X	X			X			X					X			X	X		

Building No.:	1661	2049	2051	2112	2113	2053	2053N/A	2103	2104
Date:		11/22/11	11/22/11	12/13/11	12/13/11	11/30/11	11/30/11	12/14/11	12/14/11
Building Name:	Hassayampa Rest Area	Sacaton Rest Area (EB)	Sacaton Rest Area (WB)	San Simon Rest Area	San Simon Rest Area (WB)	Sentinel Rest Area (EB)	Sentinel Rest Area (WB)	Texas Canyon Rest Area (EB)	Texas Canyon Rest Area (WB)
Building Address:	US 60 MP 116 +/-	I-10 Milepost 183	I-10 Milepost 183	I-10 Milepost 290 +/-	I-10 Milepost 390 +/-	I - 8 Milepost 82 +/-	I - 8 Milepost 82 +/-	I-10 Milepost 321	I-10 Milepost 321

SURVEY FORM 1: PARKING

			N/A		--	N/A		--	N/A		--	N/A		--	N/A		--	N/A		--	N/A		--	N/A		--	N/A		--
		Total Parking Spaces in Area/Lot:	28			47			50			35 cars and 16 semi			42 cars and 17 semi			27 cars and 12 semi			27 cars and 12 semi			40 cars and 22 semi			34 cars and 20 semi		
		Number Accessible:	2			2			2			2 cars and 1 semi			2 cars and 1 semi			2 cars and 1 semi			2 cars and 1 semi			2 cars and 1 semi			2 cars and 1 semi		
		Number Van Accessible:	0			0			0			0			0			0			0			1			0		
Section	**Item**	**Technical Requirements**	**Yes**	**No**	**N/A**	**Yes**	**No**	**N/A**	**Yes**	**No**	**N/A**	**Yes**	**No**	**N/A**	**Yes**	**No**	**N/A**	**Yes**	**No**	**N/A**	**Yes**	**No**	**N/A**	**Yes**	**No**	**N/A**	**Yes**	**No**	**N/A**
	Van Accessible Spaces:	Is one in every eight accessible parking spaces (but not less than one) designated "van accessible?"		X			X			X			X			X			X			X			X			X	

SURVEY FORM 3: EXTERIOR ACCESSIBLE ROUTES

			N/A		--	N/A		--	N/A		--	N/A		--	N/A		--	N/A		--	N/A		--	N/A		--	N/A		--

Accessible Route to be Surveyed:

From: Accessible Parking Spaces

To: Ramp connecting to the building

Section	**Item**	**Technical Requirements**	**Yes**	**No**	**N/A**	**Yes**	**No**	**N/A**	**Yes**	**No**	**N/A**	**Yes**	**No**	**N/A**	**Yes**	**No**	**N/A**	**Yes**	**No**	**N/A**	**Yes**	**No**	**N/A**	**Yes**	**No**	**N/A**	**Yes**	**No**	**N/A**
	Walkway Slope:	Is the slope of the accessible route no greater than 1:20?	X				X		X			X			X			X			X			X			X		
4.8.1		Where the slope is greater than 1:20, does it comply with the requirements for ramps?	X				X		X					X			X	X			X			X			X		
		Does the curb ramp, ramp, or elevator comply with 4.7, 4.8, or 4.10?	X				X		X			X			X					X			X		X		X		

SURVEY FORM 4: CURB RAMPS

			N/A		X	N/A		--	N/A		--	N/A		--	N/A		--	N/A		X	N/A		X	N/A		--	N/A		--
Section	**Item**	**Technical Requirements**	**Yes**	**No**	**N/A**	**Yes**	**No**	**N/A**	**Yes**	**No**	**N/A**	**Yes**	**No**	**N/A**	**Yes**	**No**	**N/A**	**Yes**	**No**	**N/A**	**Yes**	**No**	**N/A**	**Yes**	**No**	**N/A**	**Yes**	**No**	**N/A**
4.7.2 4.8.2	Slope:	Is the slope of the curb ramp 1:12 or less in new construction?			X		X		X			X			X					X			X		X		X		
	Visual Contrast:	Does the detectable warning contrast visually with adjoining surfaces?			X		X			X			X			X				X			X		X			X	

SURVEY FORM 5: DRINKING FOUNTAINS

			N/A		--	N/A		--	N/A		--	N/A		--	N/A		--	N/A		--	N/A		--	N/A		--	N/A		--
Section	**Item**	**Technical Requirements**	**Yes**	**No**	**N/A**	**Yes**	**No**	**N/A**	**Yes**	**No**	**N/A**	**Yes**	**No**	**N/A**	**Yes**	**No**	**N/A**	**Yes**	**No**	**N/A**	**Yes**	**No**	**N/A**	**Yes**	**No**	**N/A**	**Yes**	**No**	**N/A**
4.1.3(10)(b) 4.15.1		Where there is more than one drinking fountain on a floor, do 50% comply with 4.15?			X	X			X			X			X				X		X			X			X		
	Water Flow	If the fountain has a round or oval bowl, is the water flow within 3 inches of the front edge of the fountain?	X					X			X	X			X			X			X			X				X	
		Is the water flow at least 4 inches high to allow the insertion of a cup under the flow?	X					X			X	X			X			X			X				X			X	
4.15.4 4.27.4	Operation:	Are the controls operable with one hand?	X					X			X	X			X				X			X		X			X		
		Are the controls operable without tight grasping, pinching, or twisting of the wrist?	X					X			X	X				X			X			X		X			X		
		Is the force to operate the controls no greater than 5 lbf?	X					X			X	X				X			X			X		X			X		

SURVEY FORM 6: TELEPHONES

			N/A		X	N/A		X	N/A		X	N/A		X	N/A		X	N/A		--	N/A		--	N/A		--	N/A		--
Section	**Item**	**Technical Requirements**	**Yes**	**No**	**N/A**	**Yes**	**No**	**N/A**	**Yes**	**No**	**N/A**	**Yes**	**No**	**N/A**	**Yes**	**No**	**N/A**	**Yes**	**No**	**N/A**	**Yes**	**No**	**N/A**	**Yes**	**No**	**N/A**	**Yes**	**No**	**N/A**
		Where two or more banks of public pay telephones are provided on a floor, does at least one telephone per floor provide for a forward reach complying with 4.2.5			X			X			X			X			X	X			X				X			X	
4.31.7	Directories:	Are telephone books also within these reach ranges?			X			X			X			X			X			X			X		X			X	
4.1.3(17)(b)	Volume Controls	Is each accessible telephone equipped with a volume control?			X			X			X			X			X		X			X			X			X	

		Building No.:	1661			2049			2051			2112			2113			2053			2053N/A			2103			2104		
		Date:				11/22/11			11/22/11			12/13/11			12/13/11			11/30/11			11/30/11			12/14/11			12/14/11		
		Building Name:	Hassayampa Rest Area			Sacaton Rest Area (EB)			Sacaton Rest Area (WB)			San Simon Rest Area			San Simon Rest Area (WB)			Sentinel Rest Area (EB)			Sentinel Rest Area (WB)			Texas Canyon Rest Area (EB)			Texas Canyon Rest Area (WB)		
		Building Address:	US 60 MP 116 +/-			I-10 Milepost 183			I-10 Milepost 183			I-10 Milepost 290 +/-			I-10 Milepost 390 +/-			I - 8 Milepost 82 +/-			I - 8 Milepost 82 +/-			I-10 Milepost 321			I-10 Milepost 321		
		Are 25% of all other public telephones equipped with volume controls			X			X			X			X			X		X			X			X			X	
4.30.7(2)	Signs:	Are volume controlled telephones identified by a sign showing a handset with radiating sound waves?			X			X			X			X			X		X						X			X	
4.31.5	Amplification:	Are volume controls capable of amplification between 12 dbA and 18 dbA above normal?			X			X			X			X			X		X			X			X			X	
	Hearing Aid Compatible:	Are telephones hearing aid compatible?			X			X			X			X			X		X			X			X			X	
4.1.3(16) 4.30.1 4.30.7	Directional Signs:	Is the directional signage placed adjacent to all telephone banks which do not contain a text telephone?			X			X			X			X			X		X			X				X			X

SURVEY FORM 7: RAMPS

			N/A		--	N/A		--	N/A		--	N/A		--	N/A		X	N/A		X	N/A		X	N/A		--	N/A		--
Section	Item	Technical Requirements	Yes	No	N/A	Yes	No	N/A	Yes	No	N/A	Yes	No	N/A	Yes	No	N/A	Yes	No	N/A	Yes	No	N/A	Yes	No	N/A	Yes	No	N/A
4.8.2	Running Slope:	Is the ramp slope 1:12 or less?	X				X			X		X					X			X			X		X		X		
	Maximum Rise:	Is the rise for any run a maximum of 30 inches?			X		X			X		X					X			X			X		X				X
	Height:	Is the top of the handrail between 34 and 38 inches above the ramp surface?			X	X				X		X					X			X			X	X			X		

SURVEY FORM 11: DOORS AND GATES

			N/A		--	N/A		--	N/A		--	N/A		--	N/A		--	N/A		--	N/A		--	N/A		--	N/A		--
Section	Item	Technical Requirements	Yes	No	N/A	Yes	No	N/A	Yes	No	N/A	Yes	No	N/A	Yes	No	N/A	Yes	No	N/A	Yes	No	N/A	Yes	No	N/A	Yes	No	N/A
4.13.9	Hardware:	Is the operating hardware mounted no higher than 48 inches above the floor?	X			X			X			X				X		X			X			X			X		
4.13.11	Interior Doors:	Do interior hinged doors, and sliding or folding doors, have an opening force of 5 lbf or less?			X		X				X			X			X			X			X			X			X

SURVEY FORM 16: TOILET ROOMS AND BATHROOMS

			N/A		--	N/A		--	N/A		--	N/A		--	N/A		--	N/A		--	N/A		--	N/A		--	N/A		--
Section	Item	Technical Requirements	Yes	No	N/A	Yes	No	N/A	Yes	No	N/A	Yes	No	N/A	Yes	No	N/A	Yes	No	N/A	Yes	No	N/A	Yes	No	N/A	Yes	No	N/A
4.1.2(6) 4.1.3(11) 4.22.1	Public and Common Use Toilet Rooms:	If toilet rooms are provided, does each public and common use toilet room comply with 4.22		X		X			X			X			X			X			X			X			X		
4.1.2(6) 4.1.3(11) 4.23.1	Public and Common Use Bathing Facilities:	If bathrooms or bathing facilities are provided, does each public and common use bathroom or bathing facility comply with 4.23		X				X			X	X			X					X			X	X			X		
		Does the door swing not intrude into the clear floor space at any fixture?		X		X			X			X			X			X			X			X			X		
4.22.4 4.23.4	Toilet Stalls - Standard Stall:	If toilet stalls are provided, is at least one a standard stall at least 60 inches wide complying with 4.17 ?		X		X			X			X			X			X			X			X			X		
4.17.3	Size and Arrangement:	Does the size and arrangement of the standard toilet stall comply with Figure 30(a)?		X		X			X			X			X			X			X				X			X	
	Stall Width:	Is the stall at least 60 inches wide?		X		X			X			X			X			X			X				X			X	
	Door Swing:	If the stall door swings into the stall, is there at least 36 inches additional depth in the stall so that it does not encroach on the clear floor space required at the toilet and is there at least 18 inches of maneuvering space at the latch side of the door?			X			X			X			X			X		X			X				X			X
	Approach Aisle:	If the stall door swings out and the approach is from the latch side, is the aisle approaching the stall at least 42 inches wide, or If the stall door swings out and the approach is from the hinge side, is the aisle approaching the stall at least 48 inches		X		X			X			X			X					X			X	X			X		

		Building No.:	1661			2049			2051			2112			2113			2053			2053N/A			2103			2104		
		Date:				11/22/11			11/22/11			12/13/11			12/13/11			11/30/11			11/30/11			12/14/11			12/14/11		
		Building Name:	Hassayampa Rest Area			Sacaton Rest Area (EB)			Sacaton Rest Area (WB)			San Simon Rest Area			San Simon Rest Area (WB)			Sentinel Rest Area (EB)			Sentinel Rest Area (WB)			Texas Canyon Rest Area (EB)			Texas Canyon Rest Area (WB)		
		Building Address:	US 60 MP 116 +/-			I-10 Milepost 183			I-10 Milepost 183			I-10 Milepost 290 +/-			I-10 Milepost 390 +/-			I - 8 Milepost 82 +/-			I - 8 Milepost 82 +/-			I-10 Milepost 321			I-10 Milepost 321		
4.17.5 4.13.6	Maneuvering Space:	If the stall door opens out at the end of an aisle, is there at least 18 inches of maneuvering space at the latch side of the stall door?		X				X			X			X			X			X			X	X			X		
4.17.6	Grab Bars In Standard Stall:	Are the grab bars in the standard stall placed as shown in Figure 30 (a), (c), and (d)?		X		X			X			X			X				X			X		X			X		
		Do the grab bars comply with 4.26.2, 4.26.3, 4.26.4 (See below)?		X		X			X			X			X				X			X		X			X		
4.26.3(5)	Fixed:	Are the grab bars secured so that they do not rotate within their fittings?	X			X			X			X			X				X			X		X			X		
4.16.5; 4.27.4	Toilet Flush Controls:	Are they mounted on the wide side of the toilet where the clear floor space is provided?		X			X			X		X			X					X			X			X			X
		Are the controls no higher than 44 inches above the floor?	X				X			X		X			X			X			X			X			X		
4.16.6	Toilet Paper Dispenser:	Is the paper dispenser mounted below the grab bar no more than 36 inches from the back wall and at least 19 inches from the floor?	X				X			X		X			X			X			X				X			X	
4.18.4 4.27.4	Urinal Flush Controls:	Are the controls mounted no more than 44 inches above the floor?			X		X			X		X			X			X			X			X			X		
4.19.4	Pipe Shielding:	Are hot water pipes and drain pipes insulated or otherwise configured to protect against contact?		X			X			X				X	X				X			X		X			X		
4.19.5 4.27.4	Faucet Operation:	Can the faucet be operated with one hand without tight grasping, pinching, or twisting of the wrist?			X		X			X		X			X				X			X		X			X		
		Is the force required to operate controls no greater than 5 lbf?			X		X			X		X			X					X			X	X			X		
		If the valve is self-closing, does it remain open for at least 10 seconds?			X		X			X			X		X			X			X				X			X	
4.27.3	Dispenser Height:	If a forward approach is provided, is the highest operable part no higher than 48 inches?	X			X			X			X			X				X			X		X			X		

SURVEY FORM 19: SIGNAGE

			N/A		--	N/A		--	N/A		--	N/A		--	N/A		--	N/A		--	N/A		--	N/A		--	N/A		--
Section	Item	Technical Requirements	Yes	No	N/A	Yes	No	N/A	Yes	No	N/A	Yes	No	N/A	Yes	No	N/A	Yes	No	N/A	Yes	No	N/A	Yes	No	N/A	Yes	No	N/A
4.30.6	Mounting Location:	Are such signs mounted on the wall adjacent to the latch side of the door?		X			X			X			X			X		X			X				X			X	

Appendix D:
Public Involvement Summary Report

PUBLIC INVOLVEMENT SUMMARY

ARIZONA DEPARTMENT OF TRANSPORTATION

ADA TRANSITION PLAN

PREPARED BY ADOT COMMUNICATIONS

NOVEMBER 13, 2012

Introduction

Public comments on the Arizona Department of Transportation's ADA Transition Plan were solicited through an on-line survey on the website that was created to provide the public with information on the plan. The survey was opened on September 4, 2012 and comments were accepted until September 28, 2012.

The public was notified of the survey with a news release that was sent to all media in Arizona and ADOT's stakeholder database of more than 24,000 recipients, a story on ADOT's Facebook page, and a post on the ADOT blog.

The following report and appendices provide details on the public outreach effort.

ADA Background

The Americans with Disabilities Act (ADA) is a federal civil rights statute that prohibits, under certain circumstances, discrimination based on disability. Title II of the ADA addresses the law's requirements of state/local governments in their interactions with people with disabilities. The U.S. Department of Justice's regulations declare that state/local governments must perform a self-evaluation of their services, programs, policies, and practices and identify barriers that may limit accessibility for people with disabilities, and develop transition plans describing how they will address identified barriers.

ADOT has prepared a draft Transition Plan to comply with the ADA. The draft plan is intended to identify system needs and integrate them with ADOT's planning process, while ensuring that all of its facilities, services, programs and activities are accessible to all individuals. The principal focus of the plan is to ensure that ADOT standards, guidelines, and memos comply with the ADA.

Public Outreach

One of the requirements for the process of creating the Transition Plan is to reach out to the public and stakeholders and to solicit comments on the plan. The following is a summary of ADOT's public involvement efforts.

Because of limited resources public meetings on the Transition Plan could not be held around the state. ADOT Communications has an extensive database composed of the general public, local government officials, county government officials, councils of government, tribal governments, and interest groups. The decision was made to use the database to distribute information on the plan and to solicit comments.

The following were the components of the outreach effort:

Website

A website was established at: http://www.azdot.gov/Inside_ADOT/ADA_Transition_Plan.

The following documents were posted on the website (Appendix 1):

- Draft Transition Plan
- Draft Compliance Report for Building Facilities
- Grievance Policy

A survey was also posted on the website (Appendix 2).

News Release

The following news release was sent to every media outlet in Arizona on September 4, 2012:

For Immediate Release: Sept. 4, 2012
Contact: ADOT Public Information Office
news@azdot.gov -or- 1.800.949.8057

ADOT makes ADA Transition Plan available for public comment

Interested individuals encouraged to provide feedback

PHOENIX — The Arizona Department of Transportation's mission is to provide a safe, efficient and cost effective transportation system for all users, including those with disabilities. That's why the agency is seeking feedback from the public on its proposed Transition Plan to comply with the Americans with Disabilities Act.

The draft plan, which is required as part of Title II of the Americans with Disabilities Act, is intended to identify system needs and integrate them with ADOT's planning process, while ensuring that all of its facilities, services, programs and activities are accessible to all individuals.

The transition plan applies to all facilities and right-of-way owned and maintained by ADOT. Examples of facilities include office buildings, rest areas, scale sites, airports and maintenance buildings. Examples of right-of-way features include curb ramps, sidewalks, crosswalks, medians and accessible pedestrian signals.

As part of the plan development process that began in January 2011, ADOT completed a comprehensive statewide inventory of public rights-of-way, including data collection of more than 22,000 features and 10,000 photos taken.

"Every agency must document its intent to meet the Americans with Disabilities Act requirements. Developing a transition plan based on self-evaluation is the best way to do it," said ADOT Deputy State Engineer Dallas Hammit. "It's the right thing to do. We want to make sure everyone has access to all of our buildings, facilities and programs. It's important that the public submit their comments because their input will be used for the final plan."

The draft transition plan is available online at:
http://www.azdot.gov/Inside_ADOT/ADA_Transition_Plan.

Comments may be submitted until September 28. Take the survey online at:
https://www.research.net/s/ADATransitionPlan or write ADOT's ADA Coordinator, Eddie Edison, at the Arizona Department of Transportation, 206 S. 17th Avenue, Phoenix, AZ 85007.

ADOT's Transition Plan will be finalized after public comments are addressed.

ADA Background

The Americans with Disabilities Act (ADA) is a federal civil rights statute that prohibits, under certain circumstances, discrimination based on disability. Title II of the ADA addresses the law's requirements of state/local governments in their interactions with people with disabilities. The U.S. Department of Justice's regulations declare that state/local governments must perform a self-evaluation of their services, programs, policies, and practices and identify barriers that may limit accessibility for people with disabilities, and develop transition plans describing how they will address identified barriers.

Stakeholder Outreach

The news release was also sent to 24,174 recipients on the ADOT Communications databases.

Social Media

The following story was posted on the ADOT Facebook page and the ADOT blog:

http://adotblog.blogspot.com/2012/09/adot-makes-ada-transition-plan.html

The story prompted a number of comments. The comments and responses are shown following the story.

Survey

ADOT received 85 responses to the online survey. The responses and comments are attached in Appendix 2.

Appendix 1 Screen Shot of Website

MVD Offices & Alternatives | Vehicle Registration | Road Conditions | Traffic Cameras | Public Meetings

ADOT — Arizona Department of Transportation — AZ.GOV Arizona's Official Web Site

Google Custom Search — Search

Inside ADOT Home Page — Home Page

- Plans and Reports
- Policies
- Share Your Thoughts
- ADOT and the Community

Americans with Disabilities Act Transition Plan

As part of Title II of the Americans with Disabilities Act (ADA) of 1990, the Arizona Department of Transportation is conducting an evaluation of its public right-of-way, and developing a transition plan that outlines in detail how the organization will ensure safe access to all of its facilities for all individuals.

The Transition Plan will contain:

1. Data collection on statewide ADA features and evaluation for compliance with Americans with Disabilities Act Accessibility Guidelines (ADAAG) and summary of the Self-Evaluation inventory results
2. Update of ADOT ADA-related policy documents (e.g., public notice, grievance procedure)
3. Development of a prioritization process to improve ADOT facilities to meet current ADA design guidelines

Share Your Thoughts

More Information

- Americans with Disabilities Act: DRAFT Transition Plan for Public Rights-of-Way, ADOT, June 2012
- Americans with Disabilities Act: DRAFT Compliance Report for Building Facilities, ADOT, June 2012
- Arizona Department of Transportation, American with Disabilities Grievance Policy

Please help us by completing this brief survey.

American with Disabilities Act Background Information

The Americans with Disabilities Act (ADA) of 1990 is a civil rights statute that prohibits, under certain circumstances, discrimination based on disability. Title II of the ADA addresses the law's requirements of state/local governments in their interactions with people with disabilities. The U.S. Department of Justice's (DOJ) regulations declare that state/local governments must perform a self-evaluation of their services, programs, policies, and practices and identify barriers that may limit accessibility for people with disabilities, and develop transition plans describing how they will address identified barriers.

Keep informed about this project, subscribe to receive future project updates by email.

Arizona Department of Transportation

Disclaimer & Privacy Statement | Contact ADOT

Appendix 2 On-Line Survey
(follows)

ADA Transition Plan

1. What is your age?

	Response Percent	Response Count
Less than 16	0.0%	0
17 to 24	1.2%	1
25 to 34	7.0%	6
35 to 44	11.6%	10
45 to 54	**20.9%**	**18**
55 to 59	15.1%	13
60 to 64	17.4%	15
65 to 74	17.4%	15
Over 75	9.3%	8
	answered question	**86**
	skipped question	**0**

2. What is your primary mode of transportation?

	Response Percent	Response Count
Car	**91.6%**	**76**
Bus/light rail	3.6%	3
Bicycle	3.6%	3
Walking	1.2%	1
Other (please specify)		6
answered question		**83**
skipped question		**3**

3. Do you have any of the following disabilities that affect your mobility when traveling on sidewalks? Check all that apply.

	Response Percent	Response Count
Visually impaired	7.1%	6
Mobility impaired	27.1%	23
Hearing impaired	8.2%	7
None	**67.1%**	**57**
Other (please specify)		3
answered question		**85**
skipped question		**1**

4. What is the usual purpose of your walking trip?

	Response Percent	Response Count
Pleasure/exercise/health	**60.7%**	**51**
To access goods or services (groceries, errands, etc.)	26.2%	22
School/church/civic	0.0%	0
To work	13.1%	11
answered question		**84**
skipped question		**2**

5. What are the biggest challenges you experience as a pedestrian along ADOT facilities?

	Response Count
	53
answered question	**53**
skipped question	**33**

6. What general conditions related to physical accessibility do you find to be the most difficult?

	Response Percent	Response Count
Lack of curb ramps	33.8%	22
Sidewalks/walkways in poor condition	**56.9%**	**37**
Sidewalk/driveway slopes	36.9%	24
Sidewalk too narrow	21.5%	14
No median refuge, or too narrow of a refuge	24.6%	16
No crosswalk markings	13.8%	9
No pedestrian signals (walk/don't walk)	12.3%	8
No audible cues from pedestrian signals	4.6%	3
	Other (please specify)	19
	answered question	**65**
	skipped question	**21**

7. If you have a disability, or travel with someone who has a disability, what accessibility issues do you typically face?

	Response Count
	32
answered question	**32**
skipped question	**54**

8. Please rank the following types of ADA improvements necessary to achieve greater accessibility, with 1 being the highest priority.

	1	2	3	4	5	6	Rating Average	Response Count
Install/improve curb ramps	**40.5% (30)**	14.9% (11)	18.9% (14)	12.2% (9)	1.4% (1)	12.2% (9)	2.55	74
Improve sidewalks/walkways	**51.3% (39)**	15.8% (12)	14.5% (11)	3.9% (3)	5.3% (4)	9.2% (7)	2.24	76
Improve sidewalks at driveways	**22.9% (16)**	20.0% (14)	21.4% (15)	12.9% (9)	5.7% (4)	17.1% (12)	3.10	70
Improve median refuge	20.0% (14)	12.9% (9)	**25.7% (18)**	15.7% (11)	11.4% (8)	14.3% (10)	3.29	70
Improve pedestrian signals	17.1% (12)	14.3% (10)	**25.7% (18)**	12.9% (9)	18.6% (13)	11.4% (8)	3.36	70
Install/improve crosswalk markings	13.0% (9)	**27.5% (19)**	26.1% (18)	11.6% (8)	10.1% (7)	11.6% (8)	3.13	69
							answered question	**79**
							skipped question	**7**

9. Are there other services, programs, or ADOT owned facilities that you think are inaccessible? Please provide details.

	Response Count
	26
answered question	**26**
skipped question	**60**

10. Is the Americans with Disability policy and greivance procedure clear enough to understand the process?

	Response Percent	Response Count
Yes	**79.7%**	**59**
No	20.3%	15
	answered question	**74**
	skipped question	**12**

11. Please provide any comments regarding the policy.

	Response Count
	32
answered question	**32**
skipped question	**54**

Q2. What is your primary mode of transportation?		
1	Motorcycle	Sep 27, 2012 12:09 PM
2	I am a paraplegic so a wheelchair is my daily mode of transportation, but I also drive a mini-van when I leave the house to go places.	Sep 9, 2012 9:17 AM
3	Pick-Up Truck	Sep 8, 2012 9:01 PM
4	MOTORCYCLE	Sep 7, 2012 6:15 PM
5	...and light rail and bike and on foot	Sep 7, 2012 5:32 PM
6	my grandsons walk/bike	Sep 6, 2012 12:00 PM

Q3. Do you have any of the following disabilities that affect your mobility when traveling on sidewalks? Check all that apply.		
1	have issues with knees and ankles that are considered "disabilities"	Sep 18, 2012 9:39 AM
2	Husband wheelchair bound	Sep 9, 2012 12:57 PM
3	Yes, I use a wheelchair full time!	Sep 9, 2012 9:17 AM

Q5. What are the biggest challenges you experience as a pedestrian along ADOT facilities?		
1	TRAFFIC	Nov 8, 2012 3:58 PM
2	None	Sep 27, 2012 12:09 PM
3	Crazy drivers, uneven pavement, gravel and rocks everywhere, lack of sidewalks/big holes in sidewalk	Sep 24, 2012 2:37 PM
4	There are not enough curb cuts for scooters and wheelchairs	Sep 24, 2012 12:38 PM
5	Lack of good safe (feeling) pedestrian routes and shade.	Sep 18, 2012 9:39 AM
6	The bumps on sloped wheelchair ramps are real ankle turners.	Sep 13, 2012 2:57 PM
7	Watching out for cars	Sep 13, 2012 12:50 PM
8	Lack of walkways and proper crossings	Sep 12, 2012 10:49 AM
9	Lack of sidewalks on frontage roads	Sep 12, 2012 10:13 AM
10	NONE	Sep 12, 2012 9:26 AM
11	Not enough parking space.	Sep 12, 2012 8:06 AM
12	Crossing the wide roads and lack of median rufuge areas and sidewalks in some parts of urban areas	Sep 11, 2012 11:37 AM
13	Drivers when crossing streets	Sep 10, 2012 4:31 PM
14	non	Sep 10, 2012 9:58 AM
15	Traffic complying with giving pedestrians in crosswalks the right of way.	Sep 10, 2012 9:58 AM
16	lack of consistency throughout the facilities	Sep 10, 2012 9:53 AM
17	Curbs are hard for me to step up on to. It would be nice to have a handrail in some locations.	Sep 10, 2012 9:20 AM
18	None	Sep 10, 2012 9:03 AM
19	Traffic vehicles not watching out for pedestrians.	Sep 10, 2012 8:16 AM
20	steps, curbs & steep ramps	Sep 10, 2012 8:14 AM
21	I doubt that I ever walk along an ADOT maintained road.	Sep 10, 2012 8:06 AM
22	need more places to sit and rest	Sep 10, 2012 7:42 AM
23	too close to high speed high/volume traffic	Sep 10, 2012 7:04 AM
24	I walk with my dog so I like to be away from traffic. Many developments here in Oro Valley have few sidewalks, and I do not expect them along streets like Oracle Road. The occasional lack of sidewalks is probably my biggest challenge, and it's really no big deal.	Sep 10, 2012 6:10 AM

Q5. What are the biggest challenges you experience as a pedestrian along ADOT facilities?		
25	Sidewalks that just end and you have to walk in the street orthrough difficult terrain	Sep 10, 2012 5:54 AM
26	Fake handicap placards or those that have expired, using the spots of legitimately disabled folks	Sep 9, 2012 9:51 PM
27	None that I can think of.	Sep 9, 2012 7:34 PM
28	Lack of ramp access; heavy doors; lack of hand rails; steps that are too steep	Sep 9, 2012 4:45 PM
29	Curbs, barriers, doorways	Sep 9, 2012 12:57 PM
30	If facilities mean roads, lack of sidewalks.	Sep 9, 2012 10:44 AM
31	Lack of facilities in Rural areas.	Sep 9, 2012 9:43 AM
32	curb cut with to steep of grade or street that don't even have curb cuts	Sep 9, 2012 9:17 AM
33	None, since I have no disabilities at this time, but I appreciate what looks to be thoroughness in your reports and transition plan. May I ask how many full time positions have been dedicated to this project for the last 22 years since passage of the law? And will those people all still have jobs when the project has been completed?	Sep 9, 2012 8:56 AM
34	The biggest challenge is ADOT doing road construction. It seems like ADOT is always doing road construction. Just leave the roads alone, they are fine without construction. Seriously, I'm not kidding at all.	Sep 9, 2012 1:38 AM
35	I experience frustration with the closure of rest stops along AZ highways.	Sep 8, 2012 2:41 PM
36	None	Sep 8, 2012 11:13 AM
37	None	Sep 8, 2012 10:27 AM
38	Lack of sidewalks	Sep 8, 2012 9:02 AM
39	None	Sep 8, 2012 8:34 AM
40	easy access from parking lots to facility. Curbs, rock walkways, walkways not maintained. Eliminate curbs at handicapped parking places.	Sep 8, 2012 7:40 AM
41	Lack of sidewalks in our area except on our main street and even some of those are without sidewalks	Sep 8, 2012 5:52 AM
42	none	Sep 8, 2012 5:12 AM
43	Ramps that are too steep	Sep 7, 2012 9:11 PM
44	While visiting Jerome AZ I found it difficult to walk from store to store or tourist spot because of the lack of side walks, roads in horrible repair and my lack of mobility due to knee and ankle surgeries made it difficult to walk without tripping/falling.	Sep 7, 2012 8:50 PM
45	None	Sep 7, 2012 8:36 PM

Q5. What are the biggest challenges you experience as a pedestrian along ADOT facilities?		
46	typically there are no safe facilities available as options	Sep 7, 2012 6:21 PM
47	none,...I am not that bad where I have special needs	Sep 7, 2012 6:15 PM
48	don't have any - I live with the problem and don't expect the government to assist me!	Sep 7, 2012 5:43 PM
49	This is in regards to 4. I walk for pleasure and exercise and for goods and services and to church and sometimes to school. It depends on what time of year it is.	Sep 7, 2012 5:32 PM
50	If sidewalks are broken or not even.	Sep 7, 2012 5:31 PM
51	un-level paved area for easy walking.	Sep 7, 2012 5:04 PM
52	my grandsons,as well as many others, cross the I-17 @ Pinnacle Peak Rd, There are no accommodations.	Sep 6, 2012 12:00 PM
53	The sidewalks butt up against the road making a pedestrian feel that they might get hit by a car. There should be a space between the sidewalk and the raod to give more comfort and safety to the pedestrian. The sidewalks are also too narrow.	Sep 4, 2012 9:41 PM

Q6. What general conditions related to physical accessibility do you find to be the most difficult?		
1	holes on side of roads without sidewalks	Sep 13, 2012 2:57 PM
2	No sidewalks in some parts of urban areas	Sep 11, 2012 11:37 AM
3	Paint used to ID crosswalks and info is always faded and hard to see	Sep 10, 2012 4:31 PM
4	none	Sep 10, 2012 9:58 AM
5	None	Sep 10, 2012 9:01 AM
6	I generally do not find myself as a pedestrian on ADOT facilities	Sep 10, 2012 8:09 AM
7	sight impaired	Sep 10, 2012 7:04 AM
8	In some places, no sidewalk !	Sep 10, 2012 6:10 AM
9	Steps	Sep 10, 2012 12:10 AM
10	Pedestrian signal walk time is too short to cross the street	Sep 9, 2012 4:45 PM
11	Narrow shoulders that are not even wide enough to walk.	Sep 9, 2012 9:43 AM
12	ADOT putting up stupid orange cones everywhere, putting in traffic lights, streetlights, cameras and all the things that we don't want or need.	Sep 9, 2012 1:38 AM
13	None	Sep 8, 2012 11:13 AM
14	none	Sep 8, 2012 10:27 AM
15	Not enough traffic lights or pedestrian crossings	Sep 8, 2012 9:02 AM
16	None	Sep 8, 2012 8:34 AM
17	not experienced in these areas	Sep 7, 2012 6:15 PM
18	None, I'm a responsible adult and can deal with any problems without governmental intervention!	Sep 7, 2012 5:43 PM
19	no accommodations	Sep 6, 2012 12:00 PM

Q7. If you have a disability, or travel with someone who has a disability, what accessibility issues do you typically face?		
1	Lack of curb ramps!!!!	Sep 24, 2012 2:37 PM
2	Lack of sufficient amount of disabled access parking	Sep 24, 2012 12:38 PM
3	free of obstructions or tripping hazards (broken asphalt or concrete, rocks, gravel, plants in the walkway, etc) and if there are facilities at all	Sep 18, 2012 9:39 AM
4	People without handicap cards parking in handicapped spaces.	Sep 13, 2012 2:57 PM
5	Not applicable	Sep 13, 2012 12:50 PM
6	N/A	Sep 12, 2012 10:49 AM
7	N/A	Sep 12, 2012 9:26 AM
8	Lack of disable parking spaces or vehicles without disable permits park in those spaces.	Sep 12, 2012 8:06 AM
9	none	Sep 10, 2012 9:58 AM
10	N/A	Sep 10, 2012 9:58 AM
11	Too many high curbs and no ramps.	Sep 10, 2012 9:20 AM
12	Inadequate disabled parking spaces near entrances to buildings, parking spaces not close enough to the entrance, and ramps for access to building entrances so far away from them it defeats the whole purpose of disabled parking. For an excellent example of the above complaints--take a look at the disabled parking/access for LA Fitness on Ina Rd. in Tucson, AZ. I have MS which is severely effected by heat which means, even with my ice pack vest on, there is no way I can attend my swimming class at 9 am in the summer. It takes me way too long to get to the entrance... Someone needs to take a look at that.	Sep 10, 2012 9:17 AM
13	None	Sep 10, 2012 9:01 AM
14	getting into and out of vehicles, steps	Sep 10, 2012 8:14 AM
15	places to rest	Sep 10, 2012 7:42 AM
16	not applicable	Sep 10, 2012 6:10 AM
17	lack of ramps and too many steps.	Sep 10, 2012 12:10 AM
18	Lack of rest areas such as the one that is now closed at the bottom of US 60/77 at Salt River Canyon,	Sep 9, 2012 9:51 PM
19	Unknown	Sep 9, 2012 7:34 PM
20	limited handicap parking spots, or spots not monitored; steps without handrails, insufficient time to cross streeet before pedestrian signal changes	Sep 9, 2012 4:45 PM
21	Family bathrooms are not available, I cannot take my husband into the ladies room nor can I enter the mens room.	Sep 9, 2012 12:57 PM

Q7. If you have a disability, or travel with someone who has a disability, what accessibility issues do you typically face?		
22	Mainly no curb cuts with high side walks! Also, the lack of handicap parking.	Sep 9, 2012 9:17 AM
23	Normally, the worst accessibility issues are with ADOT messing up the roads, doing construction, causing traffic backups and accidents 24 hours a day, seven days a week, all over Arizona. Please stop it and leave our roads alone. We don't need it.	Sep 9, 2012 1:38 AM
24	Curbs	Sep 8, 2012 7:40 AM
25	Opening heavy restroom doors, steep ramps	Sep 7, 2012 9:11 PM
26	Mentioned in question 5	Sep 7, 2012 8:50 PM
27	Widths of doors, hallways and sidewalks.	Sep 7, 2012 8:36 PM
28	None (yet)	Sep 7, 2012 6:15 PM
29	Not too many except long distance from parking place to wherever I'm headed, but again, I'm a responsible adult and don't need governmental intervention because of my problem that's not caused by the government....	Sep 7, 2012 5:43 PM
30	Getting up curbs that don't have ramps.	Sep 7, 2012 5:31 PM
31	ramps... and not elevators to enter and exit	Sep 7, 2012 5:04 PM
32	Curbs or ramps that are not even with the street surface.	Sep 7, 2012 4:51 PM

Q9. Are there other services, programs, or ADOT owned facilities that you think are inaccessible? Please provide details.		
1	Not at the moment	Sep 24, 2012 2:37 PM
2	None	Sep 13, 2012 12:50 PM
3	No	Sep 12, 2012 10:49 AM
4	N/A	Sep 12, 2012 9:26 AM
5	Can't think of one.	Sep 12, 2012 8:06 AM
6	Lack of public restrooms	Sep 10, 2012 4:31 PM
7	no	Sep 10, 2012 9:58 AM
8	N/A	Sep 10, 2012 9:58 AM
9	no	Sep 10, 2012 9:20 AM
10	See above. From the question I guess LA Fitness isn't considered a building that needs to address disability issues??	Sep 10, 2012 9:17 AM
11	None	Sep 10, 2012 9:01 AM
12	roundabouts	Sep 10, 2012 7:04 AM
13	I think ADOT does very well overall.	Sep 10, 2012 6:10 AM
14	none at I know of.	Sep 10, 2012 12:10 AM
15	not anymore	Sep 9, 2012 7:34 PM
16	Surprise Administration and courthouse, no family restrooms. I told them about them and they suggested that we could use the Judges private chambers, (what a joke that is)	Sep 9, 2012 12:57 PM
17	Rail Road crossings are a huge challenge wherever they cross the walk path.	Sep 9, 2012 9:43 AM
18	I live in Rancho Bella Vista South and I am about to get a hand cycle to ride for exercise. I thought about riding up to Boston Butte High School for exercise, but I CAN"T because there are no curb cuts or sidewalks for that matter!! I too have thought about riding up to Fry's or Circle K, but there again there are no curb cut or sidewalks crossing Ironwood on Bella Vista so I am stuck riding in our subdivision ONLY. And I pretty sure if I wanted to ride from my house to Walmart I wouldn't be able to do so because there are NO side walks. I'm sure once I get out in the community more I will find more issues with the lack of curb cuts or side walks and I would be more than happy to let you know about those issue when the come up. Because not only would it benefit me but I know there would be a lot of people in scooters or wheelchairs would use those sidewalks. Thank you for your concern!	Sep 9, 2012 9:17 AM
19	All of the roads that ADOT is currently doing construction on are inaccessible because of the manner in which ADOT conducts the construction. By restricting lanes and putting up cones and having workers all over the roads ADOT is	Sep 9, 2012 1:38 AM

Q9. Are there other services, programs, or ADOT owned facilities that you think are inaccessible? Please provide details.		
	causing the problem. We have 8 million people using our roads here in Phoenix, get ADOT off our roads, NOW!!!	
20	No	Sep 8, 2012 11:13 AM
21	no	Sep 8, 2012 10:27 AM
22	doors that open easier. Not so heavy or more automatic doors.	Sep 8, 2012 7:40 AM
23	I was walking at night near the Science Museum in downtown PHX and the pedestrian crosswalks were dimly lit and the ground uneven as I tried to walk to an outdoor exhibit.	Sep 7, 2012 8:50 PM
24	Height of single door handles	Sep 7, 2012 8:36 PM
25	n/a	Sep 7, 2012 5:04 PM
26	I saw a woman in a motorized wheel chair stuck on the curb at southeast corner of 19th ave and Dunlap. Someone had to jump out of their car at the red light and help push her wheel chair past the curb so she could get across the road.	Sep 4, 2012 9:41 PM

Q11. Please provide any comments regarding the policy.		
1	Section Q should be moved to the start of the document rather than the end. ADA Coordinator contact information should be included in PDF policy.	Sep 27, 2012 12:09 PM
2	On the bus, front seating priority needs to be enforced. I'm tired of able-bodied college students taking up front seats from people with disabilities and the bus drivers not enforcing that priority. It's truly unfair that the only disability most young passengers recognize is a wheelchair. That is obviously not the only indicator of disability.	Sep 24, 2012 2:37 PM
3	I think the policy can wait until the economy and our Congress straightens itself out so we can better afford improvements. Have we paid for the improvements we already have? They seemed quite adequate when I was wheeling my mother around town.	Sep 13, 2012 2:57 PM
4	Keep working to make it easier for people with disabilities.	Sep 13, 2012 12:50 PM
5	A move in the right direction	Sep 12, 2012 10:49 AM
6	OVERLY RESTRICTIVE	Sep 12, 2012 9:26 AM
7	Glad their is such a policy.	Sep 12, 2012 8:06 AM
8	I have found that ADOT normally does an outstanding job in this area.	Sep 11, 2012 3:31 PM
9	How much was spent on the self evaluation?	Sep 10, 2012 9:58 AM
10	Thank you for asking my opinion.	Sep 10, 2012 9:20 AM
11	I haven't read it yet. Will do so immediately. You know, many govt. buildings provide adequate parking and access, it's the private sector that can be the most difficult or inadequate for the disabled.	Sep 10, 2012 9:17 AM
12	How much is this going to cost???	Sep 10, 2012 9:01 AM
13	na	Sep 10, 2012 12:10 AM
14	I am unsure of #10. I find it clear but have never filed a grievance so perhaps in practice it is not as easy to use	Sep 9, 2012 9:51 PM
15	More red tape and bureaucratic agency stuff.	Sep 9, 2012 7:34 PM
16	It may be the city/county interpetation of these policies but, in the greater Tucson area, they seem to be enforced to the point of absurdity in some areas and ignored in others.	Sep 9, 2012 6:48 PM
17	Glad that there is focus on this; wonder why it has taken so long for this to happen.	Sep 9, 2012 4:45 PM
18	Some cities and housing communities think that they must understand the policies but yet they are still non compliant and refuse to fix the issues.	Sep 9, 2012 12:57 PM
19	Please use common sense. We must use our dollars wisely and do what's best for the majority, while providing for those few with disability challenges. In other words, don't let the tail wag the dog.	Sep 9, 2012 10:44 AM

Q11. Please provide any comments regarding the policy.		
20	This policy is a federal mandate. If ADOT were not forced to do this there would be insufficient efforts (if any at all) to meet the need of disabled people. This is especially clear in view of the lack of a commitment to alternative non-motorized modes of transportation in rural areas.	Sep 9, 2012 9:43 AM
21	The only other comment I would like to make is, if you ever need a volunteer to help you determine whether or not something will work for us people in a wheelchair please feel free to contact me by phone or email and I would be more than happy to help you in way possible to make sure ADOT facilities are indeed handicap accessible. Phone:480-398-5203, email: jarloveshorses@yahoo.com Good Luck and thank you for making sure our sidewalks are safe and useable!!	Sep 9, 2012 9:17 AM
22	Go home ADOT and leave our streets and sidewalks alone!!!! QUIT BUILDING STUPID ROUNDABOUTS!!!! WE HATE YOU ADOT!!!! WE HATE YOU!!!	Sep 9, 2012 1:38 AM
23	suggest a group of citizens with different disabilities to "test" fixes. A usability study, if you will.	Sep 8, 2012 7:40 AM
24	The ADA exceeds the practical needs of the handicaped and becomes a handicap to the general public	Sep 8, 2012 6:59 AM
25	Don't waste funds at ADOT facilities not visited/accessed by the public. Don't waste funds at locations distant ot rarely visited by the public.	Sep 8, 2012 5:12 AM
26	Start thinking about sewers. We come from Illinois and there are sewers everywhere to help with rain. Out here crosswalks and sidewalks are flooded when it rains which makes it difficult for people with no disabilities to get through. I can't imagine how it impairs people with disabilities or the elderly.	Sep 8, 2012 2:34 AM
27	None	Sep 7, 2012 8:50 PM
28	N/A	Sep 7, 2012 8:36 PM
29	I have no idea as I have never used it.	Sep 7, 2012 7:55 PM
30	Absolutely ridiclous the amount of space/paper/time spent on such a simple thing...just went through curb 'enhancements' in city of phoenix to the tune of over $5K per intersection for stupid bumps - know where the ONE blind guy in the neighborhood walks? In the street!!!! I feel sorry for his condition, but that is reality and we the taxpayers are suffering for it when there are more pressing issues out on the highways of this state! There should be a compliation of 'complaints' from disabled folks, by district and by type of facility before we go off half-cocked and spend billions on fixing something that isn't broken....next thing you know we'll have automatic electric doors on all of the rest area restrooms! Not needed - think of the electricity need for something like that! Again the taxpayer is being screwed for a very small problem - yes, there is a need to 'accommodate', but let's not go overboard....someone tell the Feds we're not interested in providing curbside service at the rest areas for those way toooo fat to get out of their vehicle to walk a few feet to go pee - - that'll be the next thing - auto pee-r's you can drive up to so you can relieve yourself...laugh...some idiot policy wonk with the green shade will think of it..... Be reasonable and think of the costs before jumping off into doing some of this stuff....get students to sit at targeted intersections to take surveys of use by disabled folks and go from there,	Sep 7, 2012 5:43 PM

Q11. Please provide any comments regarding the policy.		
	or make necessary changes based upon complaints instead of a blanket, wholesale fix-it problem.....we need potholes and eroded pavement fixed too.....	
31	n/a	Sep 7, 2012 5:04 PM
32	I have used the facility at Sunset Point and found it quite nice.	Sep 7, 2012 4:51 PM