# Evaluation of Various Types of Bridge Deck Joints

## Final Report 510

Prepared by:

Baker
Engineering & Energy
2929 North Central Avenue, Suite 800
Phoenix, Arizona 85012

## SEPTEMBER 2006

Prepared for:

Arizona Department of Transportation
206 South 17th Avenue
Phoenix, Arizona 85007
in cooperation with
U.S. Department of Transportation
Federal Highway Administration

The contents of the report reflect the views of the authors who are responsible for the facts and the accuracy of the data presented herein. The authors assume no liability for the use or misuse of any information, opinions, or conclusions contained in this report. The contents do not necessarily reflect the official views or policies of the Arizona Department of Transportation or the Federal Highway Administration. This report does not constitute a standard, specification, or regulation. Trade or manufacturers' names which may appear herein are cited only because they are considered essential to the objectives of the report. The U.S. Government and The State of Arizona do not endorse products or manufacturers.

**Technical Report Documentation Page**

| | | |
|---|---|---|
| 1. Report No.<br>FHWA-AZ-06-510 | 2. Government Accession No. | 3. Recipient's Catalog No. |
| 4. Title and Subtitle<br>Evaluation of Various Types of Bridge Deck Joints | | 5. Report Date<br>September 2006<br>6. Performing Organization Code |
| 7. Author | | 8. Performing Organization Report No. |
| 9. Performing Organization Name and Address<br>Baker Engineering & Energy<br>2929 N. Central Avenue Suite 800<br>Phoenix, Arizona 85012 | | 10. Work Unit No.<br>11. Contract or Grant No.<br>T0348A0005 |
| 12. Sponsoring Agency Name and Address<br>**ARIZONA DEPARTMENT OF TRANSPORTATION**<br>**206 S. 17TH AVENUE**<br>**PHOENIX, ARIZONA 85007**<br><br>Project Manager: Christ G. Dimitroplos | | 13.Type of Report & Period Covered<br>Final Report<br>June 2004 - September 2006<br>14. Sponsoring Agency Code |
| 15. Supplementary Notes<br>Prepared in cooperation with the U.S. Department of Transportation, Federal Highway Administration | | |

16. Abstract


Each year numerous bridge deck joints must be replaced and/or repaired in the Arizona State Highway System Inventory. Certain types of bridge deck joints have failed prematurely or required extensive repairs within a very short time after installation. This is due in part, but not limited to, poor design, poor quality materials, improper engineering, faulty installation, and poor concrete quality. This has become a great concern in maintaining the state highway system, not to mention the enormous cost of replacing and/or repairing bridge deck joints. This also causes great inconvenience to the motoring public due to traffic control and closures required on an already congested highway system.

Although considerable research has been conducted in this area, most of the work deals with bridges built in other climates. The desert Southwest imposes some unique performance requirements. The area is arid, experiences large daily temperature changes, and high ultraviolet exposure. The northern portion of the state is also subjected to cold temperatures, and ice and snow control (salt and cinders) measures. The performance of bridge deck joint seals in Arizona has been evaluated and joint seal designs developed for the unique Arizona conditions. The initial research has discovered that the primary cause for bridge deck problems is in the various initial installation steps. The research is developing tools for construction and inspection to assure the deck joints are properly installed.


| | | | | |
|---|---|---|---|---|
| 17. Key Words<br>Bridge Deck Joints, Bridge Deck Repair | | 18. Distribution Statement<br>Document is available to the U.S. public through the National Technical Information Service, Springfield, Virginia 22161 | | 23. Registrant's Seal<br>Not Applicable |
| 19. Security Classification<br>Unclassified | 20. Security Classification<br>Unclassified | 21. No. of Pages<br>111 | 22. Price | |

# SI* (MODERN METRIC) CONVERSION FACTORS

## APPROXIMATE CONVERSIONS TO SI UNITS

| Symbol | When You Know | Multiply By | To Find | Symbol |
|---|---|---|---|---|
| | | **LENGTH** | | |
| in | inches | 25.4 | millimeters | mm |
| ft | feet | 0.305 | meters | m |
| yd | yards | 0.914 | meters | m |
| mi | miles | 1.61 | kilometers | km |
| | | **AREA** | | |
| $in^2$ | square inches | 645.2 | square millimeters | $mm^2$ |
| $ft^2$ | square feet | 0.093 | square meters | $m^2$ |
| $yd^2$ | square yards | 0.836 | square meters | $m^2$ |
| ac | acres | 0.405 | hectares | ha |
| $mi^2$ | square miles | 2.59 | square kilometers | $km^2$ |
| | | **VOLUME** | | |
| fl oz | fluid ounces | 29.57 | milliliters | mL |
| gal | gallons | 3.785 | liters | L |
| $ft^3$ | cubic feet | 0.028 | cubic meters | $m^3$ |
| $yd^3$ | cubic yards | 0.765 | cubic meters | $m^3$ |
| | NOTE: Volumes greater than 1000L shall be shown in $m^3$. | | | |
| | | **MASS** | | |
| oz | ounces | 28.35 | grams | g |
| lb | pounds | 0.454 | kilograms | kg |
| T | short tons (2000lb) | 0.907 | megagrams (or “metric ton”) | mg (or “t”) |
| | | **TEMPERATURE (exact)** | | |
| °F | Fahrenheit temperature | 5(F-32)/9 or (F-32)/1.8 | Celsius temperature | °C |
| | | **ILLUMINATION** | | |
| fc | foot candles | 10.76 | lux | lx |
| fl | foot-Lamberts | 3.426 | candela/$m^2$ | cd/$m^2$ |
| | | **FORCE AND PRESSURE OR STRESS** | | |
| lbf | poundforce | 4.45 | newtons | N |
| lbf/$in^2$ | poundforce per square inch | 6.89 | kilopascals | kPa |

## APPROXIMATE CONVERSIONS FROM SI UNITS

| Symbol | When You Know | Multiply By | To Find | Symbol |
|---|---|---|---|---|
| | | **LENGTH** | | |
| mm | millimeters | 0.039 | inches | in |
| m | meters | 3.28 | feet | ft |
| m | meters | 1.09 | yards | yd |
| km | kilometers | 0.621 | miles | mi |
| | | **AREA** | | |
| $mm^2$ | Square millimeters | 0.0016 | square inches | $in^2$ |
| $m^2$ | Square meters | 10.764 | square feet | $ft^2$ |
| $m^2$ | Square meters | 1.195 | square yards | $yd^2$ |
| ha | hectares | 2.47 | acres | ac |
| $km^2$ | Square kilometers | 0.386 | square miles | $mi^2$ |
| | | **VOLUME** | | |
| mL | milliliters | 0.034 | fluid ounces | fl oz |
| L | liters | 0.264 | gallons | gal |
| $m^3$ | Cubic meters | 35.315 | cubic feet | $ft^3$ |
| $m^3$ | Cubic meters | 1.308 | cubic yards | $yd^3$ |
| | | **MASS** | | |
| g | grams | 0.035 | ounces | oz |
| kg | kilograms | 2.205 | pounds | lb |
| Mg | megagrams (or “metric ton”) | 1.102 | short tons (2000lb) | T |
| | | **TEMPERATURE (exact)** | | |
| °C | Celsius temperature | 1.8C + 32 | Fahrenheit temperature | °F |
| | | **ILLUMINATION** | | |
| lx | lux | 0.0929 | foot-candles | fc |
| cd/$m^2$ | candela/$m^2$ | 0.2919 | foot-Lamberts | fl |
| | | **FORCE AND PRESSURE OR STRESS** | | |
| N | newtons | 0.225 | poundforce | lbf |
| kPa | kilopascals | 0.145 | poundforce per square inch | lbf/$in^2$ |

**SI is the symbol for the International System of Units. Appropriate rounding should be made to comply with Section 4 of ASTM E380**

# TABLE OF CONTENTS

**EXECUTIVE SUMMARY** ..... **1**
**PROJECT OBJECTIVES AND APPROACH** ..... **1**
**CONCLUSIONS** ..... **1**
**RECOMMENDATIONS** ..... **2**
**SUMMARY** ..... **3**
**CHAPTER 1: INTRODUCTION** ..... **5**
**BACKGROUND** ..... **5**
**SCOPE OF PROJECT** ..... **5**
**ORGANIZATION** ..... **5**
**CHAPTER 2: SURVEYS** ..... **7**
**ADOT DISTRICT SURVEYS** ..... **7**
Procedure ..... 7
Survey Results ..... 8
**NATIONAL AGENCY SURVEY** ..... **10**
Procedure ..... 10
Information Request ..... 11
Survey Questions ..... 11
Survey Results ..... 12
**CHAPTER 3: LIFE CYCLE COST ANALYSIS** ..... **21**
**OVERVIEW** ..... **21**
**METHODOLOGY** ..... **21**
General Approach ..... 21
Multivariate Analysis ..... 22
Constants ..... 23
**CONSTRUCTION CAPITAL COSTS** ..... **24**
**MAINTENANCE COSTS** ..... **25**
**TRAFFIC DISRUPTION** ..... **25**
**SUMMARY COSTS** ..... **26**
**CONCLUSIONS** ..... **26**
**CHAPTER 4: DESIGN DETAILS** ..... **27**
**BACKGROUND** ..... **27**
**CURRENT ADOT GUIDELINES** ..... **27**
**SELECTION OF DECK JOINT TYPE** ..... **28**
Joint-less Bridges ..... 28
Poured Seal ..... 28
Compression Seal ..... 30
Strip Seals ..... 33
Modular Joints ..... 34
Past ADOT Design Practices ..... 35
Current ADOT Practice and Inventory ..... 36
National Trends ..... 36
Conclusions ..... 37
Recommendations for Selection of Deck Joint Type ..... 37
**DETERMINATION OF BRIDGE DECK JOINT LOCATIONS** ..... **38**
Recommendations for the Determination of Joint Locations ..... 38

**DETERMINATION OF POINTS OF FIXITY** ..... **39**
Recommendations for Determination of Points of Fixity ..... 39
**MOVEMENT RATING CALCULATIONS** ..... **40**
Temperature Changes ..... 40
Recommendation for Temperature Changes ..... 42
Estimating the Effects of Shrinkage and Creep in Concrete ..... 42
Recommendations for Estimating the Effects of Shrinkage and Creep ..... 43
Recommendations for Calculating Movement Rating ..... 44
ANGLE ARMOR MODIFICATIONS ..... 48
ANGLE ARMOR MODIFICATIONS ..... 49
Background ..... 49
Recommendation ..... 49
**ANCHOR MODIFICATIONS** ..... **50**
Background ..... 50
Current ADOT Practice ..... 51
Other Agency Practices ..... 51
Recommendations ..... 51
**STEEL REINFORCEMENT MODIFICATIONS** ..... **54**
Background ..... 54
Recommendation ..... 54
**SNOWPLOW PROTECTION** ..... **55**
Background ..... 55
Current ADOT Practices ..... 55
Other Agency Practices ..... 55
Recommendations ..... 56
**PAVING OVER DECK JOINTS** ..... **58**
Background ..... 58
Recommendations ..... 58
**CHAPTER 5: CONSTRUCTION INSPECTION** ..... **59**
**BACKGROUND** ..... **59**
**CONCLUSION** ..... **59**
**RECOMMENDATION** ..... **59**
**CHAPTER 6: SPECIFICATIONS** ..... **67**
**BACKGROUND** ..... **67**
**APPROVED VENDOR PROCEDURES** ..... **67**
Background ..... 67
Recommendations ..... 67
**MEASURING SETTING TEMPERATURE** ..... **68**
Background ..... 68
Recommendation ..... 68
**STEEL RETAINERS** ..... **69**
Background ..... 69
Recommendations ..... 69
**BLOCKOUT CONCRETE STRENGTH** ..... **69**
Background ..... 69
Recommendation ..... 70

**ELASTOMERIC CONCRETE** ..... **70**
Background ..... 70
Recommendation ..... 70
**COMPRESSION STRENGTH TESTS** ..... **71**
Background ..... 71
Recommendation ..... 71
**LEAK TEST AFTER THE INSTALLATION PROCESS** ..... **71**
Background ..... 71
Recommendation ..... 71
**MANUFACTURER INVOLVEMENT** ..... **72**
Background ..... 72
Recommendations ..... 72
**CHAPTER 7: TRAINING** ..... **73**
**BACKGROUND** ..... **73**
**CONCLUSION** ..... **73**
**RECOMMENDATION** ..... **73**
**IMPLEMENTATION** ..... **73**
**APPENDIX A: ADOT SURVEY** ..... **81**
**APPENDIX B: NATIONAL SURVEY** ..... **87**
**APPENDIX C: AGENCY SURVEY RESPONSE LIST** ..... **91**
**APPENDIX D: ORIGINAL CHECKLIST** ..... **93**
**APPENDIX E: ALTERNATE ANCHOR DETAILS** ..... **97**
**BIBLIOGRAPHY** ..... **101**

## *List of Tables*

Table 1: Bridge deck joint types surveyed....12
Table 2: Total deck joint type currently in service....12
Table 3: Total deck joint type installed annually in new bridges....13
Table 4: Presently allowed usage....13
Table 5: Discontinued deck joint types....13
Table 6: Estimated service life of deck joints (in years)....13
Table 7: Early joint failures and their causes....14
Table 8: Agency approved manufacturers and suppliers by joint type....14
Table 9: Agency unapproved manufacturers and suppliers by joint type....15
Table 10: Number of preventative maintenance activities....15
Table 11: Compression joint problems by cause....16
Table 12: Strip seal problems by cause....17
Table 13: Poured seal problems by cause....18
Table 14: Modular joint problems by cause....19
Table 15: Key constants used....23
Table 16: Construction costs....24
Table 17: Maintenance costs....25
Table 18: Traffic disruption costs....25
Table 19: Summary costs (net present value)....26
Table 20: Past ADOT deck joint types installed....35
Table 21: Currently approved ADOT deck joint types....36
Table 22: Current ADOT inventory of bridge deck joints....36
Table 23: Proposed ADOT joint selection table....38
Table 24: AASHTO recommended temperature ranges....40
Table 25: ADOT Bridge Practice Guidelines recommended design temperatures....41
Table 26: Translated ADOT Bridge Practice Guidelines recommended design ranges....41
Table 27: ADOT Bridge Practice Guidelines recommended design ranges with $10^{o}$ F uncertainty....41
Table 28: Recommended design temperature range table....42
Table 29: Current ADOT Bridge Practice Guidelines for the effects of shrinkage and creep....43
Table 30: Recommended μ factor to be used in Equation 1....44
Table 31: Three stud anchorage details....52
Table 32: One stud anchorage detail....52
Table 33: Looped rebar anchorage....53
Table 34: Snowplow resistant details....57

## *List of Figures*

Figure 1: Typical probability distribution function definition ..... 23
Figure 2: Poured joint schematic ..... 30
Figure 3: Compression joint schematic ..... 31
Figure 4: Strip seal schematic ..... 33
Figure 5: Modular joint schematic ..... 34
Figure 6: Recommended design procedures, Page 1 ..... 45
Figure 7: Recommended design procedures, Page 2 ..... 46
Figure 8: Recommended design procedures, Page 3 ..... 47
Figure 9: Recommended design procedures, Page 4 ..... 48
Figure 10: Current ADOT strip seal anchorage details ..... 51
Figure 11: Example of recommended detail for blockout area ..... 54
Figure 12: Proposed ADOT detail for AR-ACRC overlay of bridge deck joint ..... 58

## *List of Photographs*

Photograph 1: Bridge replacement under construction..... 10
Photograph 2: In-service compression joint ..... 31
Photograph 3: Failed compression seal..... 31
Photograph 4: Adhesion failure of compression seal ..... 31
Photograph 5: Debris compacted compression seal..... 32
Photograph 6: Seals stored at manufacturer..... 33
Photograph 7: Joint measurement prior to setting ..... 40
Photograph 8: Failure concrete header and angle armor ..... 49
Photograph 9: Deck joint under construction ..... 54
Photograph 10: Close-up of blockout area..... 54
Photograph 11: Bridge deck joint damaged by snowplow ..... 55
Photograph 12: Repair of bridge deck joint due to snowplow..... 56

# EXECUTIVE SUMMARY

## PROJECT OBJECTIVES AND APPROACH

The main research objective was to evaluate and determine the performance of existing and alternative bridge deck joints with respect to: designs, durability, cost effectiveness, ease of construction, and maintenance needs. The first task performed to realize this goal was to research and identify the:

- Products currently available in the marketplace.
- Latest bridge deck joint materials.
- Recent design trends.

Next, Arizona Department of Transportation (ADOT) personnel affiliated with bridge deck joints and other bridge-owning agencies around the country were surveyed to:

- Gather past and current practices.
- Collect relevant experience.
- Document specific problem areas.

## CONCLUSIONS

When the project commenced, the focus was on finding a "better mousetrap." What was discovered through extensive research was that this does not exist and that most of the current problems with bridge deck joints are not unique to Arizona bridges.

It is recognized that budgets are always tight, and agencies will never have enough funds for all of their needs. In an effort to better utilize current funds, a life cycle analysis was performed to determine possible savings if the life of a deck joint could be extended. The analysis identified a substantial savings if the average life of a deck joint in Arizona could be extended to match the surveyed national average. This can be accomplished by:

- Placing more emphasis on the design and construction.
- Focusing on the human element issues such as: information transfer, quality control, specification enforcement, personnel training, and formal policies and procedures.

In general, ADOT experiences a high turnover rate of personnel within all disciplines at all levels. When frequent turnover occurs, information transfer and the mentoring process usually suffer. Therefore, young engineers often misunderstand how to correctly anticipate the movement rating, and construction inspectors tend to have limited bridge and bridge deck joint experience.

Other contributing factors are that the district maintenance staff is severely handicapped by budget constraints and is responsible for numerous maintenance tasks that are not related to bridges, let alone a specialty such as bridge deck joints.

The districts are therefore forced to place priority on public safety concerns, not preventative routine maintenance. In addition, the northern Arizona districts spend up to 90 percent of their annual budget on snow removal alone. They are afforded only the ability to be reactive to safety related items, not proactive in extending the life of bridge deck joints.

## RECOMMENDATIONS

The most realistic approach to increasing the life of a bridge deck joint is to simplify the entire process (from design through maintenance) and to invest more attention and money up front in the design and construction phase of the deck joint.

In efforts to simplify the process of extending the life cycle of bridge deck joints, the following recommendations are highlighted:

1. Consider eliminating bridge deck joints (when possible).
2. Use poured silicone sealant joints for:
    - The replacement of failed compression seals.
    - All new construction with small movement ratings.
3. Discontinue the use of compression seals in new construction, replacement, and rehabilitation.
4. Simplify the design procedure:
    - Use developed recommendations for determination of points of fixity and bride deck joint locations.
    - Use developed design procedure to standardize the calculation of movement ratings and the temperature setting chart for poured and strip seals.
    - Use standard 4-inch movement rating strip seal size for all anticipated movements of 2 to 4 inches.
    - Develop design procedure and standard drawing for modular deck joints.
5. Improve the durability of the deck joint assembly:
    - Modify angle armor (as recommended) to better allow compaction of concrete underneath.
    - Modify or develop detail (based on recommendations) for angle armor anchorage for use on bridges with a high volume of truck traffic.
    - Develop detail (based on recommendation) for the steel reinforcement protruding from the deck and the anchorage of the deck joint assembly in the blockout area.
    - Develop detail (based on recommendation) for snowplow protection.

- Add specification (as recommended) to discontinue the use of elastomeric concrete in blockout area.
- Add specification (as recommended) that requires the use of 5 kips per square inch (ksi) concrete in blockout area.
- Add specification (as recommended) that requires the compression test of concrete used in blockout area.
- Add specification (as recommended) that requires the use of 50 ksi (versus 36 ksi) steel for all steel elements.
- Add specification (as recommended) for Charpy V-notch requirements (for northern Arizona).
- Develop detail (based on recommendations) for overlaying of bridge deck joints.

6. Ensure proper installation of the deck joint assembly:
    - Use developed checklist for the construction inspection of bridge deck joints.
    - Use developed training course outline to train construction and maintenance personnel.
    - Use specification (as recommended) that requires the manufacturer to furnish a complete set of written installation instructions to the project manager.
    - Use specification (as recommended) that a technical representative from the manufacturer shall be present during the entire installation to provide guidance to the contractor in the proper installation procedures.
    - Use developed specification (as recommended) for leak test after the installation process to ensure a properly functioning deck joint assembly.

## SUMMARY

Simplifying the bridge deck joint design, construction, and maintenance process will allow everyone involved to be easily trained in bridge deck joint assemblies. This should lead to the proper implementation and a longer life cycle resulting in a substantial savings of labor and budget for ADOT.

# CHAPTER 1: INTRODUCTION

## BACKGROUND

Bridge deck joints are a necessary component of a properly designed and functioning structure. Bridge deck joints allow a bridge to expand and contract due to a number of factors such as: temperature changes, deflections caused by live loads, creep and shrinkage of concrete, adjacent earth or pavement pressure, settlement, stream or ice flow, and longitudinal forces of vehicles.

While bridge deck joints provide a critical function in the overall performance of a structure, a poorly designed, installed, or maintained deck joint can contribute to the premature replacement of the bridge or become a dangerous safety hazard to the public.

## SCOPE OF PROJECT

The project scope as detailed in the Scope of Work provided at project commencement included:

- Conduct literature search on deck joint issues.
- Identify related studies to determine possible benefits.
- Compile inventory of potential theoretical designs.
- Investigate the design, performance, durability, cost effectiveness, constructability, and maintenance of existing bridge decks.
- Investigate all types of bridge deck joints that ADOT builds.
- Evaluate types of deck joints available on the market.
- Recommend appropriate bridge deck joints.

## ORGANIZATION

This report is divided into project tasks based on the scope of work. Chapter 2: Surveys, addresses the first task completed. ADOT personnel were interviewed to determine problems encountered in the state of Arizona. To augment this information, a survey was mailed to other bridge-owning agencies around the country.

Chapter 3: Life Cycle Cost Analysis, discusses the potential savings if the life cycle of a deck joint can be extended to the average reported from the national agency survey. To achieve this goal, recommendations for changes in design details and procedure are outlined in Chapter 4: Design Details. Chapter 5: Construction Inspection, highlights suggestions for the overall improvement of deck joint installation. Chapter 6: Specifications, aims at tightening up and better enforcing construction specifications. Chapter 7: Training, is designed to provide a mechanism for information transfer for all of the personnel associated with bridge deck joint implementation.

# CHAPTER 2: SURVEYS

## ADOT DISTRICT SURVEYS

To gain the insight into the deck joint problems that ADOT personnel have encountered, ADOT districts were visited in person. The main objectives of the visits were to:

- Gather statewide experience on bridge deck joints.
- Document specific problem areas.
- Organize findings into focus areas.

### Procedure

A list of possible interview candidates was collected from the Technical Advisory Committee (TAC) and ADOT district engineers to ensure that the most informed personnel were included in the study. Individuals involved in bridge design, maintenance, construction, and materials were nominated.

A list of questions covering the design, construction, and maintenance of bridge deck joints was sent in advance to the interviewees (Appendix A). To promote better dialogue, they were asked to review the questions prior to the meeting. They were instructed to not complete the questionnaire beforehand and to strike out any questions they felt were outside their areas of expertise.

Each meeting began by providing the ADOT interviewees background on:

- The origins of the research project.
- The scope and main objectives of the project.
- Michael Baker Jr., Inc.'s involvement in the project.
- Project plan, schedule, and tasks to accomplish objectives.

To enable open and honest feedback, it was made clear to everyone that only the feedback they provided, not the individual's name, would be used in the report.

Each interview began by asking the interviewees what they perceived were problems with the current design, constructability, or in-service condition of bridge deck joints. To allow a more in-depth and meaningful discussion, the interviewees were allowed and encouraged to deviate from the questionnaire and provide any insight or related information on the topic at hand. Near the end of the meetings, the questionnaires were reviewed to ensure that all of the questions that matched the interviewee's skill sets were asked and that they were given adequate time to respond and comment to their satisfaction.

At the conclusion of the meetings, it was reiterated that everything stated would remain anonymous. They were also informed that they would be provided a copy of the final report that would include the project recommendations and conclusions.

**Survey Results**

To better analyze the feedback provided, the responses were divided into the following nine categories, with the most problematic and frequent responses listed.

Please note that the responses are as provided and have not been edited.

1. Programmatic
    - Joint problem more prevalent in last 10 years
    - Traffic volume in Phoenix Metro area
    - Accelerated construction program in 1980s

2. Maintenance
    - No specialty equipment for joint repair
    - Debris in joints
    - Maintenance is reactive not proactive

3. Policies & Procedures
    - Change from standard joint to proprietary
    - No policy for deviating from standards
    - Spotty review of plans by bridge maintenance
    - Tighter standards
    - Formal review of change orders
    - Difference in temperature range in AZ than American Association of State Highway and Transportation Officials (AASHTO)

4. Design Details
    - No modular joint standards
    - Fatigue problems in steel armor
    - 9 inch studs are difficult to fabricate
    - Concrete vibration difficult under armor angle
    - Need asphalt to asphalt joint detail
    - Account for construction discrepancies in design
    - Snowplow resistance

5. Specification Control
    - Not permitted to specify singular proprietary joint
    - High early strength concrete - do admixtures work?
    - Approved product list
    - Sporadic joint manufacturer representative at construction site
    - Poor performance of elastomeric concrete
    - Paving over joints

6. Information Transfer
    - No historical joint opening measurements (feedback)
    - Bridge Group recommends joint replacement projects
    - Long duration of implementing repair projects

7. Money
    - No money
    - No preventative maintenance

8. Construction
    - Hold joint assembly in place during construction
    - No certifications for joint assemblies
    - Concrete failure under angle iron
    - Test compression strength of blockout
    - Protect joint seal from construction traffic when in place

9. Training
    - Personnel not adequately trained
    - Spotty application of new construction experience
    - Don't understand "e" value
    - Omitting felt bond breaker between barrier and deck
    - Erection bolt or angle removed at wrong time (in relation to initial concrete hardening)
    - Joint opening set once and not checked for proper opening before placement
    - Blockout concrete 28-day compressive strength (f'c )
    - Epoxy in blockout not included

**Photograph 1: Bridge replacement under construction**

## NATIONAL AGENCY SURVEY

In addition to surveying the local ADOT districts, a national survey of bridge owners and agencies was conducted (Appendix B). The objectives of the national survey were to:

- Gather relevant experience on bridge deck joints.
- Gather best practices.
- Compile data into a consolidated database.
- Use national information to benchmark and augment ADOT data.
- Apply, as appropriate, lessons learned from national practice leaders to identify ADOT problem areas.

### Procedure

Surveys (Appendix B) and self-addressed stamped envelopes were mailed out to 97 agencies in the United States and Canada. To minimize the time commitment from the agencies, they were asked to complete the questionnaire with their best estimate of information rather than detailed statistical data. Twenty-seven responses were received from agencies (Appendix C) in 25 states and two Canadian provinces.

**Information Request**

Each agency was asked to include a copy of the pertinent sheets of the following documents for each bridge deck joint type listed in:

- Past and current bridge deck joint design practice guidelines.
- Past and current bridge deck joint standards.
- Past and current bridge deck joint construction specifications.
- Copy of any related agency studies on bridge deck joints.

OR

- Provide a website address to the agency's bridge group website that contains the above documents.

**Survey Questions**

To gain insight into other agencies' practices and preferences, the following questions were asked about each of the deck joint types (See Table 1) listed in:

- List the total deck joint type currently in service (quantity or percent of bridge inventory). (See Table 2)
- List the total deck joint type installed annually (quantity or percent of new bridge inventory). (See Table 3)
- Does your agency presently allow usage of deck joint type? (See Table 4)
- Has your agency previously allowed usage of deck joint type but discontinued? (See Table 5)
- Rate the estimated service life (years) of deck joint type. (See Table 6)
- Has your agency experienced any early failures with deck joint type? Explain. (Use additional sheets as necessary.) (See Table 7)
- List approved manufacturers / suppliers of deck joint type. (See Table 8)
- List any manufacturers or proprietary products that your agency will not permit. (See Table 9)
- Rate problematic joint issues on the following scale: (See Tables 11-14)
    - 1 – Major problem
    - 2 – Minor problem
    - 3 – No problem
- How often is preventative maintenance performed by cleaning or flushing debris from joint or joint trough? (See Table 10)
- List typical maintenance activities and their frequency associated with this type of joint. (Use additional sheets as necessary.) (See Table 10)

- List any references to books, articles, or reports relevant to this type of joint. (Use additional sheets as necessary.)
- Has your agency recently conducted a study related to this type of deck joint?

**Table 1: Bridge deck joint types surveyed**

| | |
|---|---|
| 1. | Poured seals |
| 2. | Compression seals |
| 3. | Strip seals |
| 4. | Finger or sliding plate joints |
| 5. | Modular joints |
| 6. | Integral abutments |
| 7. | Other joint types in service |

## Survey Results

It should be noted that the surveys were completed by individuals with working knowledge of bridge deck joint implementation procedures of the solicited agencies. Their responses do not necessarily reflect the official views of the employing agencies. Also, note that not all questions were answered by all participating agencies.

**Table 2: Total deck joint type currently in service**

| Bridge Inventory | Pourable Seals | Compression Seals | Strip Seals | Finger or Sliding Plate Joints | Modular Joints | Integral Abutments |
|---|---|---|---|---|---|---|
| <5 % | 6 | 3 | 3 | 10 | 15 | 11 |
| 5-10% | 1 | 1 | 5 | 5 | 2 | 3 |
| 10-25% | 6 | 7 | 6 | 2 | 1 | 1 |
| 25-50% | 2 | 5 | 2 | 2 | 0 | 3 |
| 50-75% | 2 | 2 | 3 | 0 | 0 | 0 |
| >75% | 1 | 1 | 0 | 0 | 0 | 0 |

**Table 3: Total deck joint type installed annually in new bridges**

| New Bridges | Pourable Seals | Compression Seals | Strip Seals | Finger or Slide Plate Joints | Modular Joints | Integral Abutments |
|---|---|---|---|---|---|---|
| <5 % | 8 | 8 | 3 | 16 | 15 | 10 |
| 5-10 % | 1 | 1 | 4 | 2 | 0 | 1 |
| 10-25% | 2 | 1 | 3 | 0 | 1 | 2 |
| 25-50% | 3 | 5 | 4 | 0 | 0 | 3 |
| 50-75% | 1 | 1 | 2 | 0 | 0 | 1 |
| >75% | 1 | 1 | 1 | 0 | 0 | 1 |

**Table 4: Presently allowed usage**

| Agency Allows | Pourable Seals | Compression Seals | Strip Seals | Finger or Slide Plate Joints | Modular Joints | Integral Abutments |
|---|---|---|---|---|---|---|
| Yes | 16 | 15 | 22 | 16 | 19 | 21 |
| No | 5 | 11 | 1 | 6 | 3 | 2 |

**Table 5: Discontinued deck joint types**

| Angency Discon-tinued | Pourable Seals | Compression Seals | Strip Seals | Finger or Slide Plate Joints | Modular Joints | Integral Abutments |
|---|---|---|---|---|---|---|
| Yes | 2 | 11 | 1 | 5 | 3 | 2 |
| No | 17 | 13 | 19 | 16 | 17 | 21 |

**Table 6: Estimated service life of deck joints (in years)**

| Result | Pourable Seals | Compression Seals | Strip Seals | Finger or Slide Plate Joints | Modular Joints | Integral Abutments |
|---|---|---|---|---|---|---|
| Avg | 11.50 | 12.65 | 18.01 | 28.10 | 19.21 | 50.94 |
| Min | 4 | 5 | 8 | 10 | 10 | 15 |
| Max | 30 | 25 | 30 | 75 | 25 | 100 |

**Table 7: Early joint failures and their causes**

| Pourable Joint | Compression Joint | Strip Seal | Open Joint | Assembly Joint | Integral Abutment |
|---|---|---|---|---|---|
| ▪ Debonding of sealant<br>▪ Seal debonds | ▪ Seal failure due to incorrect size<br>▪ The seal falls out<br>▪ Typically seal did not stay in joint<br>▪ Compression seal popouts from joint<br>▪ Adhesive failure<br>▪ Seal slips out of armor<br>▪ Loss of compression<br>▪ Concrete header spalling | ▪ Gland damage<br>▪ Seal pulled out due to over extension | ▪ The trough fails<br>▪ Leakage impossible to control<br>▪ Broken welds | ▪ Early mechanism failures<br>▪ Weld failure at support<br>▪ Anchorage failure | ▪ Approach settlement<br>▪ Approach panel problems cause poor ride |

**Table 8: Agency approved manufacturers and suppliers by joint type**

| Pourable Joint | Compression Joint | Strip Seal | Open Joint | Assembly Joint | Integral Abutment |
|---|---|---|---|---|---|
| ▪ Dow Corning<br>▪ Silicone Specialties<br>▪ Watson Bowman<br>▪ Linear Dynamics<br>▪ Pavetech<br>▪ Sika<br>▪ CochOil<br>▪ RJ Watson | ▪ Capital Services<br>▪ DS Brown<br>▪ Watson Bowman<br>▪ Structural Accessories<br>▪ RJ Watson | ▪ DS Brown<br>▪ Watson Bowman<br>▪ Esco Seal Co<br>▪ RJ Watson<br>▪ Techstar<br>▪ Goodco | ▪ DS Brown<br>▪ Tuckerman Steel<br>▪ Capitol City Steel<br>▪ L.B. Foster Co<br>▪ Lewis Engineering | ▪ Watson Bowman<br>▪ DS Brown<br>▪ RJ Watson<br>▪ Tech Star<br>▪ Tuckerman Steel | ▪ Linear Dynamics<br>▪ Pavetech<br>▪ Watson Bowman<br>▪ Structural Accessories<br>▪ General Tire<br>▪ DS Brown<br>▪ BJS (Koch)<br>▪ Epoxy Industries |

**Table 9: Agency unapproved manufacturers and suppliers by joint type**

| Pourable Joint | Compression Joint | Strip Seal | Open Joint | Assembly Joint | Integral Abutment |
|---|---|---|---|---|---|
| None | None | None | None | ▪ Techstar | ▪ Conflex<br>▪ Aluminum Joint Systems<br>▪ BJS (Koch) |

**Table 10: Number of preventative maintenance activities**

| Time Period (months) | Pourable Joint | Compression Joint | Strip Seal | Open Joint | Assembly Joint | Integral Abutment |
|---|---|---|---|---|---|---|
| Never | 16 | 0 | 15 | 15 | 15 | 15 |
| 0 – 3 | 0 | 0 | 0 | 0 | 0 | 0 |
| 3 - 6 | 0 | 0 | 0 | 0 | 0 | 0 |
| 6 - 12 | 0 | 1 | 0 | 0 | 0 | 0 |
| 12 - 24 | 5 | 6 | 7 | 8 | 7 | 2 |

**Table 11: Compression joint problems by cause**

| Compression Joints | Number of joint problems reported by agency | | | | | | | | | | | | | | |
|---|---|---|---|---|---|---|---|---|---|---|---|---|---|---|---|
| | **Over Extension** | **Cold Temperature** | **Hot Temperature** | **Leaking** | **Extrusion** | **Sunlight** | **Traffic** | **Debris** | **Improper Installation** | **Armor Failure** | **Edge Spalling** | **Inadequate** | **Manufacturing Problems** | **Inadequate Maintenance** | **Inadequate Repair** |
| **Alberta Transportation** | 3 | 3 | 3 | 1 | 2 | 3 | 3 | 3 | 2 | 3 | 3 | 3 | 3 | 3 | 3 |
| **Arkansas Hwy & Trans Dept** | 1 | 3 | 3 | 1 | 1 | 3 | 2 | 2 | 3 | 3 | 3 | 3 | 1 | 1 | 1 |
| **Caltrans** | 1 | 3 | 3 | 2 | 2 | 3 | 3 | 1 | 3 | 3 | 3 | 3 | 3 | 3 | 3 |
| **Connecticut DOT** | 3 | 1 | 1 | 1 | 1 | 3 | 1 | 1 | 1 | 3 | 1 | 2 | 1 | 1 | 1 |
| **Hawaii DOT** | 1 | 3 | 2 | 3 | 3 | 2 | 2 | 2 | 2 | 1 | 2 | 2 | 2 | 2 | 2 |
| **HNTB Corporation** | 3 | 3 | 3 | 2 | 2 | 3 | 3 | 3 | 3 | 3 | 2 | 3 | 3 | 3 | 3 |
| **Idaho Trans Dept** | 3 | 3 | 3 | 2 | 3 | 3 | 3 | 3 | 3 | 2 | 2 | 2 | 3 | 2 | 3 |
| **Iowa DOT** | 1 | 2 | 3 | 1 | 3 | 3 | 3 | 1 | 2 | 3 | 3 | 2 | 3 | 3 | 3 |
| **Kentucky** | 3 | 3 | 3 | 2 | 2 | 3 | 3 | 2 | 3 | 2 | 2 | 3 | 3 | 2 | 2 |
| **LA DOT & Development** | 1 | 1 | 3 | 1 | 3 | 3 | 3 | 3 | 3 | 3 | 3 | 3 | 3 | 3 | 3 |
| **Massachusetts Hwy Dept** | 1 | 2 | 2 | 1 | 1 | 2 | 2 | 1 | 2 | 1 | 1 | 2 | 2 | 1 | 1 |
| **Minnesota DOT** | 1 | 3 | 3 | 1 | 1 | 3 | 2 | 1 | 2 | 2 | 1 | 2 | 2 | 2 | 2 |
| **Montana DOT** | 1 | 1 | 1 | 1 | 2 | 3 | 2 | 2 | 1 | 2 | 3 | 1 | 3 | 2 | 3 |
| **MTA Bridges & Tunnels** | 2 | 2 | 3 | 1 | 2 | 3 | 1 | 2 | 2 | 2 | 2 | 2 | 3 | 2 | 2 |
| **New Jersey DOT** | 3 | 3 | 3 | 3 | 3 | 3 | 3 | 3 | 3 | 3 | 3 | 3 | 3 | 3 | 3 |
| **New Mexico St Hwy & Trans Dpt** | 1 | 1 | 2 | 1 | 1 | 2 | 2 | 2 | 2 | 2 | 2 | 2 | 2 | 2 | 2 |
| **North Carolina DOT** | 3 | 3 | 2 | 2 | 3 | 1 | 2 | 1 | 2 | 2 | 1 | 3 | 3 | 1 | 2 |
| **Oklahoma DOT** | 1 | 1 | 3 | 1 | 2 | 3 | 2 | 2 | 2 | 2 | 3 | 3 | 3 | 1 | 1 |
| **Pennsylvania DOT** | 3 | 3 | 3 | 1 | 1 | 3 | 1 | 3 | 1 | 1 | 2 | 3 | 3 | 2 | 1 |
| **Rhode Island DOT** | 3 | 3 | 3 | 2 | 2 | 2 | 2 | 2 | 2 | 2 | 2 | 3 | 3 | 1 | 2 |
| **The Ohio Turnpike Commission** | 2 | 3 | 3 | 2 | 2 | 3 | 3 | 2 | 2 | 2 | 2 | 2 | 3 | 3 | 3 |
| **Virginia DOT** | 3 | 3 | 3 | 3 | 2 | 3 | 2 | 2 | 1 | 3 | 3 | 2 | 3 | 3 | 3 |
| **Washington State DOT** | 2 | 3 | 3 | 2 | 2 | 3 | 3 | 2 | 2 | 3 | 1 | 2 | 3 | 3 | 3 |
| **Average** | 2.00 | 2.43 | 2.65 | 1.61 | 2.00 | 2.74 | 2.30 | 2.00 | 2.13 | 2.30 | 2.17 | 2.43 | 2.65 | 2.13 | 2.26 |
| **0 – N/A** | 0 | 0 | 0 | 0 | 0 | 0 | 0 | 0 | 0 | 0 | 0 | 0 | 0 | 0 | 0 |
| **1 – Major** | 10 | 5 | 2 | 12 | 6 | 1 | 3 | 6 | 4 | 3 | 5 | 1 | 2 | 6 | 5 |
| **2 – Minor** | 3 | 3 | 4 | 8 | 11 | 4 | 10 | 11 | 12 | 10 | 9 | 11 | 4 | 8 | 7 |
| **3 – None** | 10 | 15 | 17 | 3 | 6 | 18 | 10 | 6 | 7 | 10 | 9 | 11 | 17 | 9 | 11 |

**DOT = Department of Transportation**

**Table 12: Strip seal problems by cause**

| | Number of strip seal problems reported by agency | | | | | | | | | | | | |
|---|---|---|---|---|---|---|---|---|---|---|---|---|---|
| Strip Seals | **Over Extension** | **Cold Temperature** | **Hot Temperature** | **Leaking** | **Sunlight** | **Traffic** | **Debris** | **Improper Installation** | **Anchorage Failure** | **Inadequate Design** | **Manufacturing Problems** | **Inadequate Maintenance** | **Inadequate Repair** |
| **Alberta Transportation** | 3 | 3 | 3 | 2 | 3 | 2 | 2 | 3 | 2 | 3 | 3 | 2 | 2 |
| **Arkansas Hwy & Trans Dept** | 3 | 3 | 3 | 2 | 3 | 3 | 2 | 2 | 3 | 3 | 3 | 3 | 3 |
| **Caltrans** | 1 | 3 | 3 | 1 | 3 | 3 | 3 | 3 | 3 | 3 | 3 | 3 | 3 |
| **Connecticut DOT** | 3 | 3 | 3 | 1 | 3 | 1 | 1 | 3 | 2 | 3 | 3 | 2 | 3 |
| **Hawaii DOT** | 3 | 3 | 3 | 2 | 3 | 3 | 1 | 3 | 3 | 3 | 3 | 2 | 3 |
| **HNTB Corporation** | 2 | 3 | 2 | 2 | 1 | 2 | 2 | 2 | 1 | 1 | 2 | 2 | 2 |
| **Idaho Trans Dept** | 3 | 3 | 3 | 2 | 3 | 3 | 2 | 2 | 3 | 3 | 3 | 3 | 3 |
| **Iowa DOT** | 0 | 0 | 0 | 0 | 0 | 0 | 0 | 0 | 0 | 0 | 0 | 0 | 0 |
| **Kentucky** | 3 | 3 | 3 | 3 | 3 | 3 | 1 | 3 | 2 | 3 | 2 | 3 | 3 |
| **LA DOT & Development** | 3 | 3 | 3 | 2 | 3 | 1 | 2 | 2 | 1 | 2 | 2 | 2 | 2 |
| **Massachusetts Hwy Dept** | 3 | 3 | 3 | 1 | 3 | 2 | 2 | 1 | 1 | 1 | 3 | 1 | 1 |
| **Minnesota DOT** | 3 | 3 | 3 | 3 | 3 | 3 | 3 | 2 | 3 | 2 | 3 | 3 | 3 |
| **Montana DOT** | 3 | 3 | 2 | 3 | 2 | 2 | 2 | 2 | 2 | 3 | 2 | 2 | 2 |
| **MTA Bridges & Tunnels** | 0 | 0 | 0 | 0 | 0 | 0 | 0 | 0 | 0 | 0 | 0 | 0 | 0 |
| **New Jersey DOT** | 1 | 3 | 3 | 2 | 3 | 2 | 2 | 2 | 3 | 2 | 3 | 2 | 2 |
| **New Mexico St Hwy & Trans Dpt** | 2 | 3 | 1 | 1 | 2 | 2 | 3 | 1 | 2 | 2 | 3 | 3 | 2 |
| **North Carolina DOT** | 2 | 2 | 3 | 3 | 3 | 3 | 2 | 1 | 3 | 3 | 3 | 2 | 3 |
| **Oklahoma DOT** | 3 | 3 | 3 | 3 | 3 | 3 | 3 | 3 | 3 | 3 | 3 | 3 | 3 |
| **Pennsylvania DOT** | 3 | 3 | 3 | 2 | 3 | 3 | 2 | 3 | 3 | 3 | 2 | 1 | 3 |
| **Rhode Island DOT** | 2 | 2 | 2 | 1 | 2 | 2 | 1 | 2 | 1 | 2 | 2 | 1 | 1 |
| **The Ohio Turnpike Commission** | 3 | 3 | 3 | 2 | 3 | 3 | 2 | 3 | 3 | 3 | 3 | 2 | 3 |
| **Virginia DOT** | 3 | 3 | 3 | 1 | 3 | 2 | 2 | 3 | 2 | 3 | 3 | 1 | 1 |
| **Washington State DOT** | 2 | 3 | 3 | 2 | 3 | 3 | 2 | 2 | 2 | 2 | 3 | 3 | 3 |
| **Average** | 2.35 | 2.65 | 2.52 | 1.78 | 2.52 | 2.22 | 1.83 | 2.09 | 2.09 | 2.30 | 2.48 | 2.00 | 2.22 |
| **0 – N/A** | 2 | 2 | 2 | 2 | 2 | 2 | 2 | 2 | 2 | 2 | 2 | 2 | 2 |
| **1 – Major** | 2 | 0 | 1 | 6 | 1 | 2 | 4 | 3 | 4 | 2 | 0 | 4 | 3 |
| **2 – Minor** | 5 | 2 | 3 | 10 | 3 | 8 | 13 | 9 | 7 | 6 | 6 | 9 | 6 |
| **3 – None** | 14 | 19 | 17 | 5 | 17 | 11 | 4 | 9 | 10 | 13 | 15 | 8 | 12 |

**DOT = Department of Transportation**

**Table 13: Poured seal problems by cause**

| Poured Seals | Number of pour seal problems reported by agency | | | | | | | | | | | | |
|---|---|---|---|---|---|---|---|---|---|---|---|---|---|
| | **Over Extension** | **Cold Temperature** | **Hot Temperature** | **Leaking** | **Extrusion** | **Sunlight** | **Traffic** | **Debris** | **Improper Installation** | **Inadequate Design** | **Manufacturing Problems** | **Inadequate Maintenance** | **Inadequate Repair** |
| **Alberta Transportation** | 3 | 3 | 3 | 1 | 3 | 3 | 2 | 1 | 3 | 3 | 3 | 3 | 3 |
| **Arkansas Hwy & Trans Dept** | 3 | 3 | 3 | 3 | 2 | 3 | 2 | 2 | 2 | 3 | 3 | 3 | 3 |
| **Caltrans** | 3 | 3 | 3 | 2 | 2 | 3 | 2 | 3 | 2 | 3 | 1 | 3 | 3 |
| **Connecticut DOT** | | | | | | | | | | | | | |
| **Hawaii DOT** | 2 | 3 | 2 | 2 | 2 | 2 | 1 | 2 | 2 | 2 | 2 | 2 | 2 |
| **HNTB Corporation** | | | | | | | | | | | | | |
| **Idaho Trans Dept** | 3 | 3 | 3 | 2 | 1 | 2 | 2 | 3 | 1 | 3 | 3 | 2 | 3 |
| **Iowa DOT** | 3 | 3 | 3 | 1 | 2 | 3 | 3 | 2 | 3 | 3 | 3 | 2 | 3 |
| **Kentucky** | 3 | 3 | 3 | 1 | 1 | 3 | 2 | 2 | 3 | 3 | 3 | 2 | 2 |
| **LA DOT & Development** | | | | | | | | | | | | | |
| **Massachusetts Hwy Dept** | 1 | 2 | 2 | 1 | 1 | 2 | 2 | 1 | 2 | 2 | 3 | 1 | 1 |
| **Minnesota DOT** | | | | | | | | | | | | | |
| **Montana DOT** | 2 | 1 | 2 | 2 | 3 | 3 | 2 | 2 | 1 | 1 | 3 | 3 | 3 |
| **MTA Bridges & Tunnels** | 2 | 3 | 3 | 1 | 2 | 2 | 2 | 2 | 2 | 2 | 3 | 2 | 2 |
| **New Jersey DOT** | 3 | 3 | 3 | 3 | 3 | 3 | 3 | 3 | 3 | 3 | 3 | 3 | 3 |
| **New Mexico St Hwy & Trans Dpt** | 2 | 2 | 2 | 1 | 1 | 2 | 2 | 2 | 2 | 2 | 2 | 2 | 2 |
| **North Carolina DOT** | 1 | 2 | 2 | 1 | 1 | 2 | 2 | 1 | 1 | 1 | 2 | 1 | 2 |
| **Oklahoma DOT** | 2 | 3 | 3 | 1 | 2 | 3 | 2 | 2 | 1 | 3 | 2 | 1 | 1 |
| **Pennsylvania DOT** | 2 | 3 | 3 | 3 | 3 | 3 | 3 | 1 | 1 | 3 | 3 | 2 | 3 |
| **Rhode Island DOT** | 2 | 1 | 2 | 2 | 2 | 2 | 2 | 2 | 2 | 3 | 2 | 2 | 2 |
| **The Ohio Turnpike Commission** | | | | | | | | | | | | | |
| **Virginia DOT** | 3 | 3 | 3 | 3 | 3 | 3 | 3 | 2 | 2 | 3 | 3 | 3 | 3 |
| **Washington State DOT** | 3 | 3 | 3 | 3 | 3 | 3 | 3 | 2 | 2 | 3 | 3 | 3 | 3 |
| **Average** | 2.39 | 2.61 | 2.67 | 1.83 | 2.06 | 2.61 | 2.22 | 1.94 | 1.94 | 2.56 | 2.61 | 2.22 | 2.44 |
| **0 – N/A** | 5 | 5 | 5 | 5 | 5 | 5 | 5 | 5 | 5 | 5 | 5 | 5 | 5 |
| **1 – Major** | 2 | 2 | 0 | 8 | 5 | 0 | 1 | 4 | 5 | 2 | 1 | 3 | 2 |
| **2 – Minor** | 7 | 3 | 6 | 5 | 7 | 7 | 12 | 11 | 9 | 4 | 5 | 8 | 6 |
| **3 – None** | 9 | 13 | 12 | 5 | 6 | 11 | 5 | 3 | 4 | 12 | 12 | 7 | 10 |

**DOT = Department of Transportation**

**Table 14: Modular joint problems by cause**

| Modular Joints | Number of modular joint problems reported by agency | | | | | | | | | | | |
|---|---|---|---|---|---|---|---|---|---|---|---|---|
| | **Over Extension** | **Uneven Gaps** | **Seal Pullout** | **Bearing Fall Out** | **Fatigue Cracking** | **Debris** | **Improper Installation** | **Inadequate Design** | **Anchorage Failure** | **Manufacturing Problems** | **Inadequate Maintenance** | **Inadequate Repair** |
| **Alberta Transportation** | | | | | | | | | | | | |
| **Arkansas Hwy & Trans Dept** | | | | | | | | | | | | |
| **Caltrans** | 3 | 3 | 2 | 2 | 3 | 3 | 3 | 2 | 3 | 3 | 3 | 3 |
| **Connecticut DOT** | 3 | 2 | 2 | 1 | 1 | 2 | 1 | 1 | 1 | 2 | 2 | 2 |
| **Hawaii DOT** | 3 | 2 | 3 | 3 | 2 | 2 | 2 | 3 | 2 | 2 | 2 | 2 |
| **HNTB Corporation** | 3 | 3 | 2 | 3 | 3 | 3 | 3 | 3 | 3 | 3 | 3 | 3 |
| **Idaho Trans Dept** | 3 | 3 | 3 | 2 | 3 | 2 | 2 | 3 | 2 | 2 | 2 | 3 |
| **Iowa DOT** | 3 | 2 | 1 | 1 | 2 | 1 | 1 | 2 | 3 | 2 | 2 | 2 |
| **Kentucky** | 3 | 3 | 2 | 1 | 2 | 2 | 3 | 3 | 2 | 3 | 2 | 2 |
| **LA DOT & Development** | 2 | 2 | 2 | 2 | 3 | 3 | 3 | 2 | 3 | 2 | 3 | 2 |
| **Massachusetts Hwy Dept** | 3 | 3 | 3 | 2 | 2 | 1 | 2 | 3 | 3 | 3 | 1 | 1 |
| **Minnesota DOT** | 1 | 1 | 1 | 1 | 2 | 2 | 2 | 1 | 3 | 2 | 2 | 2 |
| **Montana DOT** | 2 | 3 | 2 | 2 | 2 | 3 | 2 | 3 | 3 | 2 | 2 | 2 |
| **MTA Bridges & Tunnels** | 3 | 3 | 3 | 2 | 3 | 2 | 2 | 3 | 3 | 2 | 2 | 3 |
| **New Jersey DOT** | 3 | 3 | 3 | 3 | 3 | 3 | 3 | 3 | 3 | 3 | 3 | 3 |
| **New Mexico St Hwy & Trans Dpt** | 3 | 2 | 2 | 2 | 2 | 2 | 2 | 2 | 2 | 2 | 2 | 2 |
| **North Carolina DOT** | 3 | 1 | 3 | 2 | 2 | 1 | 1 | 3 | 2 | 2 | 2 | 2 |
| **Oklahoma DOT** | 3 | 3 | 3 | 3 | 3 | 2 | 3 | 2 | 3 | 3 | 3 | 3 |
| **Pennsylvania DOT** | 3 | 3 | 3 | 1 | 1 | 2 | 2 | 1 | 2 | 3 | 2 | 3 |
| **Rhode Island DOT** | 2 | 2 | 2 | 1 | 2 | 1 | 2 | 2 | 2 | 2 | 3 | |
| **The Ohio Turnpike Commission** | | | | | | | | | | | | |
| **Virginia DOT** | 3 | 3 | 2 | 3 | 3 | 3 | 3 | 3 | 1 | 3 | 3 | 3 |
| **Washington State DOT** | 3 | 3 | 3 | 2 | 1 | 2 | 2 | 2 | 3 | 2 | 2 | 1 |
| **Average** | 2.75 | 2.50 | 2.35 | 1.95 | 2.25 | 2.10 | 2.20 | 2.35 | 2.45 | 2.40 | 2.30 | 2.32 |
| **0 – N/A** | 3 | 3 | 3 | 3 | 3 | 3 | 3 | 3 | 3 | 3 | 3 | 4 |
| **1 – Major** | 1 | 2 | 2 | 6 | 3 | 4 | 3 | 3 | 2 | 0 | 1 | 2 |
| **2 – Minor** | 3 | 6 | 9 | 9 | 9 | 10 | 10 | 7 | 7 | 12 | 12 | 9 |
| **3 – None** | 16 | 12 | 9 | 5 | 8 | 6 | 7 | 10 | 11 | 8 | 7 | 8 |

**DOT = Department of Transportation**

## CONCLUSIONS

After categorizing all of the issues from the ADOT interviews, it was evident that part of the solution to improve the life of bridge deck joints involves administrative or management proceedures such as information transfer, quality and specification control, personnel training, and policies and procedures.

At project commencement, the focus to accomplish the main objectives was on deck joint materials, details, and environment. The national survey results showed that bridge owners around the country are using the same types of bridge deck joints (with variation in details) and are experiencing the same problems that ADOT has experienced in the past. In effect, no new or better "mousetrap" exists or has been tried with any significant success by other bridge owning agencies.

Highlights from the nation survey include:

- Eleven agencies have discontinued the use of compression seals.
- Only one agency does not permit the use of strip seals.
- The estimated service life of strips seals is over 5 years greater than compression seals.
- The estimated service life of pourable joints and compression seals are comparable (while poured seals cost only a fraction of compression seals).
- One agency is using integral abutment design on more than 90 percent of new construction.
- Most agencies reported a problem with compression seal failure due to loss of compression during service due to a variety of reasons.
- Except for a few local suppliers, most of the strip seals are produced by a core of industry name brands.
- Approximately 25 percent of agencies regularly clean or flush debris from joints.
- Leaking and debris were consistently the highest reported problems with each type of bridge deck joint.

# CHAPTER 3: LIFE CYCLE COST ANALYSIS

## OVERVIEW

The relative evaluation of deck joint solutions is difficult, involving a number of considerations. The recommendation must include consideration of the estimated construction costs, maintenance costs, replacement costs, and disruptions to the traffic flow.

This analysis evaluates the impact of alternative decisions regarding deck joints using a procedure that involves identifying both the deterministic and probabilistic costs associated with the bridge deck joint throughout the design life of the structure, and then reducing these distributed costs to a single equivalent value useful for comparing the alternatives.

## METHODOLOGY

### General Approach

This analysis compares the life cycle costs of typical bridge deck joints that have different durations of replacement life. The various durations may reflect differences in initial design, budget priorities, repair and maintenance approaches, or other factors. The reason for the difference in the estimated life is not explored in this analysis, but is discussed in other chapters of this report. The focus of the analysis is the life cycle cost impact of the difference in replacement life, regardless of reason.

The alternative estimates of life cycle costs, given differences in replacement life, have varying associated costs due primarily to their differing interim costs for replacement. However, a choice based strictly on construction costs ignores the additional costs associated with maintenance, as well as the disruptions associated with decreased traffic capacity during replacement. However, there is inherent difficulty in comparing the impact of these different costs when they occur in the future and at differing replacement intervals.

The net present value concept reduces initial and future costs to an equivalent present value. This equivalent present value can be viewed as the total dollar amount that would have to be invested at a fixed interest rate to fully fund all anticipated expenditures. For example, say that an initial cost is estimated at $1000, but that an additional $100 will be needed for each year throughout an estimated 20-year design life. In total, then, $3000 ($1000 + (20 x $100)) will need to be paid over the design life. However, if $2,487.75 were invested in a bank that pays 3% interest, then there would be exactly enough money invested and earned throughout the 20 years to pay all expected costs. Thus, the value of $2,487.75 better reflects the current value of the decision. The amount of $2,487.75 is called the net present value of the initial investment and future expenditures. The rate used to discount the future expenditures to the equivalent present value is called the discount rate, 3% for this example.

The expected value of a risk or cost item is calculated by combining the probability of the occurrence of the event with the associated cost range, assuming that it occurs. For example, say that some repair is estimated to occur but the costs cannot be completely defined. However, based on experience, the costs can be estimated to range within some limits. The cost limits can be used to define an associated probability function of the costs. This can be done for individual cost components, i.e., the total cost can be broken down into subtask costs and individually defined. For example, bridge deck joint replacement can be broken down into labor and material items, each with its own defined cost range. Examining the cost range of each item, and combining the individual cost ranges to form an expected total job cost can find the expected value of the job.

The procedure for the evaluation of alternative deck joint replacement life assumptions combines these concepts. All costs are reduced to a single net present value, which forms the primary basis of comparison.

**Multivariate Analysis**

For this analysis, all of the key variables were assumed probabilistic in nature. Each variable was described with a range of possible values; i.e., each variable has an assigned probability distribution function. A single value from within each range of each of the variables was picked, and the total cost for each alternative was computed by totaling the individual costs. This was done many times, which resulted in a description of the entire range of possible outcomes and the likelihood of achieving the outcome for each variable.

This process is called Monte Carlo simulation, and was aided by a computer software package called Crystal Ball™, which is an add-in function to Microsoft Excel™. All of the analytical worksheets produced for this report were created in Excel, so it was relatively simple to make these worksheets accessible by Crystal Ball™. This was done by choosing the cells identified as having uncertainty and then changing them from single-valued cells to cells that are associated with a range of values, i.e., a probability distribution function). These cells are then amenable to Monte Carlo simulation using Crystal Ball™. Crystal Ball™ uses these “assumption cells” to select a single value within the range of each of these cells to recalculate the worksheet. The result is saved as a single value within the range of possible outcomes – in this case the total cost of each alternative. By repeating this process a large number of times, the complete distribution of outcomes can be found.

A typical probability distribution function that was used for variables in the Crystal Ball™ simulation is shown in Figure 1. The function in Figure 1 defined a truncated normal distribution for the hourly wage for a laborer. The classical “bell-shaped” distribution function is truncated on the low end at $25 per hour (/hr), i.e., the rate can be no less than $25/hr. Similarly, the rate is capped at a high of $35/hr. Defining the mean at $30/hr also defines the standard deviation at $3/hr. Thus, when the full analysis is run, each iterate will select one value from within this distribution for the hourly wage rate for a laborer. The program will then do the same for all other defined random variables, e.g., cost of concrete, contractor profit, etc. It will then combine all selected values for a total cost for this iterate. This process of selection and totaling is repeated typically thousands of times to develop a distribution for the total cost.

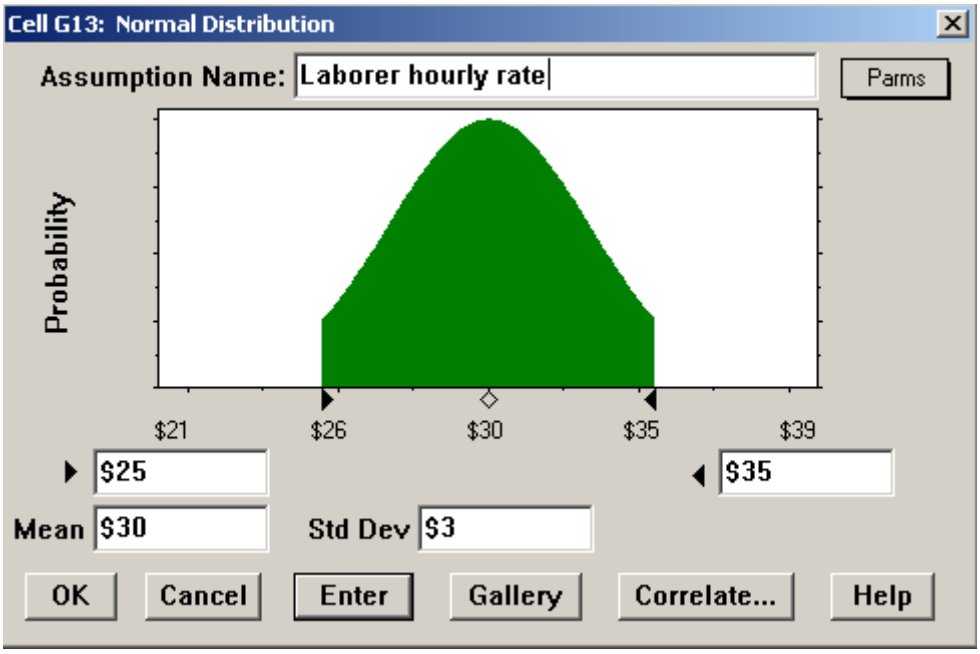


**Figure 1: Typical probability distribution function definition**

## Constants

Table 15 shows constants assumed for the analysis. The duration of the study was constant for 50 years, i.e., the Net Present Value developed is for the total cost of the deck over 50 years.

**Table 15: Key constants used**

| Variable | Value |
|---|---|
| Discount Rate | 3% |
| Joint Length | 60 feet |
| Duration | 50 years |
| Salvage Value | $0 |

## CONSTRUCTION CAPITAL COSTS

The capital costs, used for both the initial design and replacement, were determined based on experience and historical cost metrics applicable to construction in the Phoenix area. These costs include the bid construction costs for labor and materials plus associated allowances for design, construction management, and administration. All costs, including internal ADOT costs are included, as is normal for a life cycle cost analysis. A summary table of the capital costs is contained in Table 16.

**Table 16: Construction costs**

| Item | Cost Basis | Quantity | Minimum Cost | Maximum Cost |
|---|---|---|---|---|
| Design | Lump sum | 1 | $4000 | $9000 |
| Drawings | Per drawing (dwg) | 6 | $1000 | $2100 |
| Materials | Per linear foot (ft) | 60 | $55 | $140 |
| Mobilization / Demobilization | Lump Sum | 1 | $3280 | $17000 |
| Concrete | Per cubic yard (cu yd) | 4.6 | $200 | $300 |
| Foreman | Per hour (hr) | 9.2 (twice # cu yds) | $60 | $70 |
| Concrete Finisher | Per hour | 18.5 (4 times # cu yds) | $45 | $55 |
| Welder | Per hour | 15 | $55 | $65 |
| Laborer | Per hour | 30 | $25 | $35 |
| QA/QC | Per hour | 3 | $60 | $70 |
| Traffic Control | Per night | Low of 1 to high of 3 | $4000 | $5000 |
| Contractor, Overhead and Profit | % of total of above | | 10% | 40% |
| ADOT Administration | % of total of above | | 10% | 30% |

## MAINTENANCE COSTS

Costs associated with maintenance and operations were developed based on experience for the Phoenix area. The costs per foot were multiplied by the total linear footage of deck joint common to this study, which is 60 feet. All costs are reduced to their net present value using the discount rate. For this analysis, no inspection costs were assumed.

The maintenance and minor repair costs were assumed to occur at the halfway point in the design life. This is a reasonable assumption because a joint with a longer replacement life would also probably not need as much intermediate repair as a joint with a shorter life. A summary table of the maintenance costs used is contained in Table 17.

**Table 17: Maintenance costs**

| Item | Cost Basis | Number | Minimum Cost | Maximum Cost | Frequency |
|---|---|---|---|---|---|
| Inspection | Lump Sum | 0 | Not Applicable | Not Applicable | Not Applicable |
| Routine Maintenance | Per linear foot | 60 | $10 | $20 | Half of replacement life |
| Minor Repair | Per linear foot | 60 | $50 | $50 | Half of replacement life |

## TRAFFIC DISRUPTION

Costs associated with traffic disruption were developed based on experience and historical cost metrics for the Phoenix area. In addition, consideration was given to the cost borne by the "clients" of this analysis, i.e., a cost associated with motorist delay. All costs are reduced to their net present value using the discount rate. The frequency of these costs is the same as the frequency of the replacement. Reroute costs were not included since the joint replacement was assumed to occur at night with partial lane closure only. The cost of delay (per 100 vehicles) was assumed to be about $1000/hr, and the total delay for slowdown / stopping at construction was assumed to be between 1 to 20 hours (for between 1 to 3 nights for the job). A summary table of the maintenance costs used for the five alternatives is contained in Table 18.

**Table 18: Traffic disruption costs**

| Item | Cost Basis | Number | Minimum Cost | Maximum Cost |
|---|---|---|---|---|
| Management Design | Lump Sum | 1 | $1500 | $3000 |
| Reroute | Lump Sum | 0 | Not Applicable | Not Applicable |
| Public Notice | Lump Sum | 1 | $1000 | $2000 |
| Public Delay Cost | Per hour (100 cars) | 1-20 hours (mean of 5 hours) | $1000 (100 cars) | $2000 (100 cars) |

## SUMMARY COSTS

The life cycle cost, i.e., the summary cost from all cost contributions to the net present value, of each replacement life alternative, is displayed in Table 19.

**Table 19: Summary costs (net present value)**

| | Replacement Life (years) | | | | |
|---|---|---|---|---|---|
| **Cost** | **4** | **8** | **12** | **16** | **20** |
| Capital Costs | $48,023 | $48,023 | $48,023 | $48,023 | $48,023 |
| Maintenance | $40,520 | $19,466 | $12,462 | $10,538 | $6,429 |
| Replacement | $287,721 | $158,489 | $115,763 | $101,018 | $79,942 |
| Traffic | $65,926 | $36,314 | $26,525 | $23,146 | $18,317 |
| **TOTAL** | **$442,190** | **$262,293** | **$202,773** | **$182,726** | **$152,711** |

## CONCLUSIONS

As expected, the estimated net present value of the deck joint life cycle costs over the 50-year period decreases as the replacement life of the deck joint increases. Thus, if the current service life of an ADOT bridge deck joint can be increased by 4 years, then the analysis indicates a total savings of over a quarter of a million dollars ($442,190-$152,711 = $289,479) for a single type of bridge deck joint over the 50-year period.

# CHAPTER 4: DESIGN DETAILS

## BACKGROUND

It became apparent through the interviews conducted with the ADOT bridge designers that a simple and more prescribed selection and design procedure for bridge deck joints would be welcomed and beneficial.

## CURRENT ADOT GUIDELINES

The current ADOT Bridge Group, Bridge Practice Guidelines does not contain a set of prescribed calculations to design bridge deck joints. They, however, do offer the following information to aid the designer:

- Factors to consider in movement rating calculations.
- Mean temperature.
- Temperature ranges for climates based on elevation above sea level.
- The setting temperature of the joint.
- Design rotation of deck joint.
- Snowplow protection.
- Vent holes in deck joint armor.
- Seal splice locations.
- Plan preparation.

The guidelines also ask the designer to consider:

- Effects of bridge skew, curvature, and neutral axis location.
- Installation width required to install the seal element.
- Anticipated settlement and rotation due to live and dead loads, where appropriate.

In addition to the Bridge Group Practice guidelines, standard drawings exist to assist the designer in detailing the following expansion joints:

- Standard Drawing (SD) 3.01, Compression Seal.
- SD 3.02, Strip Seal.

## SELECTION OF DECK JOINT TYPE

One of the most important decisions a bridge deck joint designer needs to make is what type of bridge deck joint to use. There are numerous types of bridge deck joints available on the market made by a variety of manufacturers that use a mixture of design theories and materials. Manufacturers are continuously trying to incorporate the latest materials and technology available to improve on current designs. Joints based on "state-of-the-practice" design theories that have been sold to bridge owners in the past often did not survive the heavy traffic loads that they were exposed to on a daily basis.

### Joint-less Bridges

It has been stated many times by many individuals that the best bridge deck joint is none at all. With that being said, several of the national agencies surveyed permit the design of bridges with no deck joints at the riding surface.

The decision to eliminate deck joints is based on the design configuration, fixity conditions, material type, and skew angle of the bridge.

#### Integral Abutments

ADOT has experimented with integral abutments in the past and experienced limited success. During the interviews with the ADOT bridge designers, it was stated they would be open to trying integral abutments again if new technology and information were available. No new techniques or designs were discovered from the research performed. Therefore, no further discussion is made of integral abutments in this report.

#### No Joints

Several agencies allow the design of bridges without the use of any bridge deck joints. The generally accepted length for bridges with small skew angles (less than 30°) is up to 400 feet for concrete superstructure bridges and up to 300 feet for steel superstructure bridges. A few agencies reported that they had successfully exceeded these limits.

### Poured Seal

Another alternative for bridges when a small movement is anticipated is the use of a poured joint. The benefits of using the poured sealant are:

- Repels water and debris.
- Very inexpensive relative to the other joint types.
- Easily maintained by ADOT district maintenance.

The most widely used material in poured bridge deck joints is silicone. The silicone sealant is poured over a backer rod (expanded closed-cell polyethylene foam) that is placed in the expansion gap (Figure 2). The joint is typically armored with angle iron to protect the headers from normally anticipated edge spalling. Sealant bead should be recessed ($^3/_8$ inch to ½ inch) below pavement surface to prevent abrasion from traffic and snow removal equipment.

The effectiveness and durability of the joint requires tight material specifications, good estimate of projected movement, fieldwork, and installation.

The advantages of using a poured silicone joint are:

- All-temperature gunnability (characteristics relatively unchanged over normal installation temperature range).
- Easy to use (self-leveling, no tooling required).
- Seals irregular surfaces (can be used to seal joints where spalls have occurred without any forming).
- Good weatherability (virtually unaffected by sunlight, rain, snow, or extreme temperatures, and stays rubbery from -49° to 300° F without tearing, cracking, or becoming brittle).
- Fast cure (tack free surface in 1 hour).
- Unprimed adhesion (primer is not required for bonding to Portland cement concrete).
- Long life reliability (sealant prevents non-compressible objects from entering the joint by squeezing them out as the force pushing them into the sealant is removed).
- Meets American Society for Testing Materials (ASTM) D 5893-96, "Standard Specification for Cold Applied, Single Component, Chemically Curing Silicone Joint Sealant for Portland Cement Concrete Pavements."

The limitations of the poured silicone sealant joint are:

- Not recommended for conditions where continuous water moisture is expected.
- Not to be used in totally confined spaces where sealant is not exposed to atmospheric moisture.
- Not to be applied to wet or damp concrete or installed in inclement weather.
- May not fully bond to angle iron made of weathering steel.

These limitations do not pose any significant problems for deck joint usage on Arizona bridges due to the surface exposure of the seal and the dry climate of the region. A few of the ADOT districts, including districts in northern Arizona, are sealing failed compression seals on existing bridges with silicone sealants with positive results.

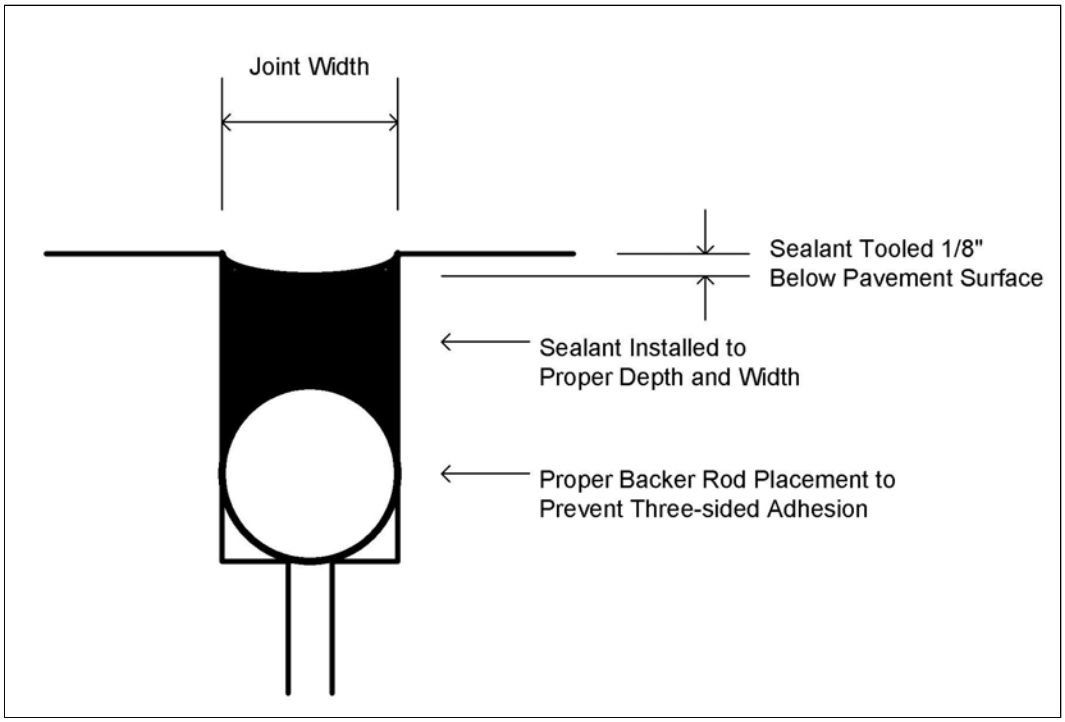


**Figure 2: Poured joint schematic**

The initial cost of the poured joint is minimal and has a reasonable life cycle cost. The biggest advantage of using the poured joint is that no special equipment or training is required for the installation. If properly installed, the seal has a life expectancy of about 10 years. When the seal needs to be replaced, personnel from the ADOT maintenance districts would easily be able to replace the seal with minimal material and labor costs. In addition, the seal can be replaced in half widths of the bridge, minimizing use of traffic control and inconvenience to the public.

## Compression Seal

Compression seals are seals that are compressed when inserted into the joint opening and remain in the state of compression during all movement phases of the joint. They are designated by size according to their width (Figure 3 and Photograph 2). Compression seals are available in various sizes from 1-¼ inch to 6 inch with a maximum moving rating of approximately 2 inches. The seal must have a nominal width that is greater than the largest expected gap opening. Therefore, the working dimensions of compression seals vary generally from 85 percent of the nominal width when the joint is fully open to approximately 40 to 50 percent of the nominal width when the joint is at its minimum dimension. Compression seals are always intended to be in a compressed stressed state. They maintain water tightness and seal the joint by maintaining sidewall pressure on the joint interface (joint armoring).

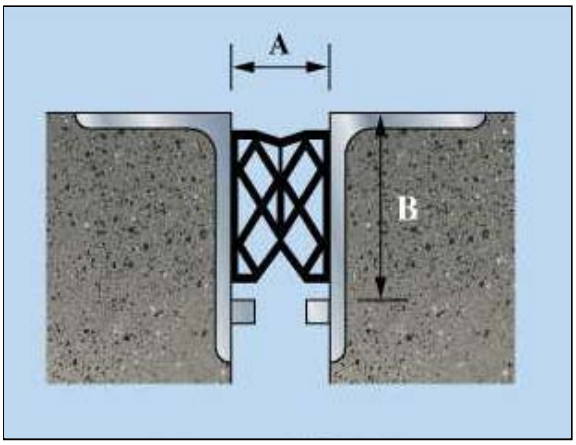


**Figure 3: Compression joint schematic**

**Photograph 2: In-service compression joint**

Design Considerations

As with all bridge deck joint designs, a critical factor is accurately predicting the anticipated movement. If the compression seal is oversized for the opening, the seal will bulge above the surface of the deck and become exposed to traffic wear. If the compression seal is undersized for the opening, the seal will lose compression and fall out.

**Photograph 3: Failed compression seal**

**Photograph 4: Adhesion failure of compression seal**

Construction Installation

The most important factor that will ultimately determine the success of a compression seal expansion joint is proper installation of the seal during construction. If the seal is not correctly installed at the time of construction, the life of the joint is greatly reduced.

The seal is typically recessed in the joint anywhere from ¼ inch to ½ inch below the riding surface. If the seal elevation is too high, vehicular traffic will damage the seal. If

the seal elevation is set too low, debris will quickly accumulate on top of the seal. The debris is then compacted in the joint by traffic, specifically heavy truck loads. After a few iterations of this process, the seal elevation drops and will eventually fall completely through the opening onto the abutment (Photographs 3 and 4).

In addition to the elevation of the seal, great precaution and consideration with respect to temperature are involved when installing the joint. If the opening is too small ( less than 1-¼ inch), it is very difficult or near impossible to install the seal without tearing or damaging it. If the opening is set too wide, the seal will fall through during the first significant temperature drop.

**Photograph 5: Debris compacted compression seal**

The seal must be properly bonded with an approved adhesive along its entire length to the sides of the joint to prevent water and debris infiltration (Photograph 5). Once debris gets between the seal and joint armor, the seal is no longer watertight, tends to bulge out of the opening, and begins to settle below the steel joint protection and induce more compressive stresses onto the concrete headers that will eventually lead to edge spalling.

The contractor may request the seal be installed in the factory. While this is very convenient for the contractor, many times the joint width is never compared to the calculated setting width relative to the temperature of the deck at the time of installation. In addition, the construction inspector cannot inspect the deck joint opening and armor protection according to specifications due to obstruction by the seal.

## Strip Seals

Strip seals expansion joints consist of two extruded steel channels that extend across the full width of the bridge roadway and support neoprene seal inserts (Figure 4). Strip seals achieve movement by the gland folding up below the surface of the deck. As with compression seals, debris will fill the opening soon after placed in service. However, the gland is less likely to be exposed to traffic wear due to the folding nature of the seal.

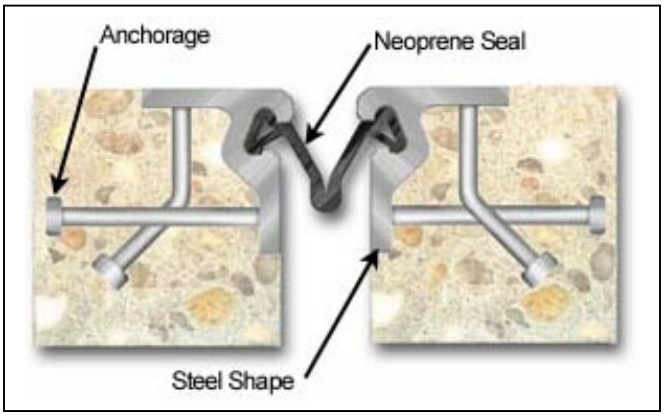


**Figure 4: Strip seal schematic**

Strip seals are available in whole inch sizes from 2 inches to 5 inches, with 3 and 4 inches as the most widely used. Standard type strip seals can accommodate skew angles up to 45 degrees. Manufacturers offer special assistance in size selection for bridges with larger skew angles.

Design Considerations

As with compression seal design, the movement rating must be correctly anticipated. The preferred maximum allowable opening, measured along the centerline of the bridge is 4 inches. This limitation improves the ride, reduces live load impact, and reduces the hazard to motorcyclists and bicyclists. The preferred joint opening dimensions for sealing element installation is 2 inches (Photograph 6).

**Photograph 6: Seals stored at manufacturer**

Construction Installation

The extruded steel channels are normally fabricated in 20 to 40-foot lengths and are field spliced at the bridge site. To prevent impact damage from snowplow blades, steel extrusions must be installed approximately ¼ inch below the intended finish concrete surface.

The neoprene gland must be field installed due to partial length shipment of the steel assembly from the fabricator. Strip seal installations offer greater construction tolerance than compression seals with regards to setting conditions since the seal does not need to be compressed to be placed. However, if the opening is too narrow, the seal may be difficult if not impossible to install.

## Modular Joints

A modular joint system consists of two or more preformed compression seals or neoprene glands fixed between transverse load distribution members (Figure 5). The transverse load distribution members rest on support bars that allow for sliding movements.

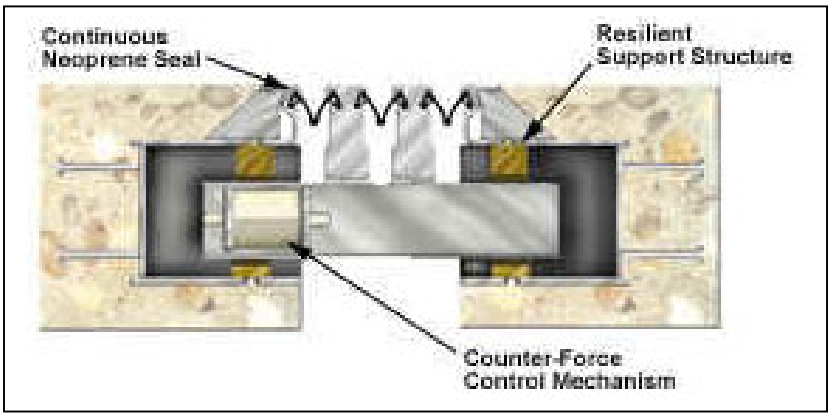


**Figure 5: Modular joint schematic**

Modular joints can accommodate movement ranges from 4 to 30 inches. They are sized according to the movement rating offered and are manufactured in increments of 3 inches beginning with a 6-inch modular system. The movement rating is equal to the product of the number seals and the 3-inch maximum allowable movement rating of each seal.

Design Considerations

Current ADOT Bridge Group Bridge Practice Guidelines recommends that modular joints should be avoided whenever possible due to the complexity and high costs of the joint. Designers are asked to satisfy all of the requirements specified in the stored item specification, 601MODJT, and the proprietary product literature supplied by the manufacturer of the system.

## Past ADOT Design Practices

To provide background on the past joint selection practices of ADOT's bridge management system, Arizona Bridge Information Storage System (ABISS) was queried to match the current expansion joint type in place with respect to the year the bridge was built. While the bridge deck joint may have been replaced since construction, it does provide valuable insight to the design trends of ADOT bridge designers over the past several decades.

**Table 20: Past ADOT deck joint types installed**

| | Number of Joints by Type | | | | |
|---|---|---|---|---|---|
| **Year** | **Strip Seal** | **Pourable Joint** | **Compression Joint** | **Assembly Joint** | **Open Joint** |
| 2002 | 8 | 0 | 12 | 2 | 0 |
| 2001 | 18 | 1 | 38 | 1 | 0 |
| 2000 | 11 | 0 | 33 | 1 | 1 |
| 1999 | 9 | 0 | 19 | 2 | 1 |
| 1998 | 20 | 0 | 29 | 5 | 0 |
| 1997 | 28 | 0 | 21 | 8 | 0 |
| 1996 | 3 | 1 | 21 | 0 | 0 |
| 1995 | 8 | 2 | 15 | 2 | 0 |
| 1994 | 4 | 0 | 12 | 2 | 0 |
| 1993 | 7 | 5 | 13 | 1 | 1 |
| 1992 | 5 | 0 | 25 | 1 | 2 |
| 1991 | 6 | 0 | 23 | 1 | 4 |
| 1990 | 9 | 3 | 45 | 3 | 3 |
| 1989 | 4 | 2 | 18 | 0 | 1 |
| 1988 | 35 | 3 | 17 | 8 | 4 |
| 1987 | 21 | 3 | 5 | 1 | 1 |
| 1986 | 10 | 1 | 11 | 4 | 1 |
| 1985 | 8 | 0 | 8 | 0 | 0 |
| 1984 | 12 | 0 | 7 | 1 | 0 |
| 1983 | 0 | 0 | 1 | 0 | 0 |

From the late 1920s to early 1960s the vast majority of deck joints installed on Arizona bridges were open joints, primarily sliding plate joints. Compression joints first became utilized in the 1960s and were installed at the same rate as the previously favored sliding plate joint. It wasn't until the early 1980s that the strip seal was as consistently used from year to year. As highlighted in Table 20, recent practice indicates that on average, compression joints are installed twice as often as strip seals, with modular joints being used only when larger movement ratings (greater than 4 inches) are necessary.

## Current ADOT Practice and Inventory

Current ADOT guidelines and specifications (Section 1011-5) permit the usage of compression seals, strip seals, and modular joints (Table 21). The current inventory of bridge deck joints in service also includes pourable, sliding plate, and finger joints (Table 22).

**Table 21: Currently approved ADOT deck joint types**

| Joint Type | Movement Rating | Design Considerations |
|---|---|---|
| Compression Seal | Up to 2.5 inches | • Does not require cover plates for pedestrian sidewalks<br>• Not suited for large skews (> 30°) |
| Strip Seal | Up to 4 inches | • Requires cover plates for pedestrian sidewalks<br>• Good for large skews |
| Modular Joint | 4 to 24 inches | • Very expensive<br>• ADOT standard drawing currently does not exist |

**Table 22: Current ADOT inventory of bridge deck joints**

| Deck Joint Type | Bridges | Total Quantity (ft) |
|---|---|---|
| Strip Seal | 238 | 40,611 |
| Pourable Joint | 74 | 12,612 |
| Compression Joint | 703 | 97,256 |
| Modular Joint | 49 | 7,293 |
| Open Joint<br>(Includes open, sliding, and finger plate joints) | 451 | 46,105 |
| **Total** | 1,515 | 203,877 |

Based on design information from ADOT's Arizona Bridge Information Storage System (ABISS) database. Bridge deck joint may have been replaced since construction.

## National Trends

It is recognized that one deck joint type does not "fit all" and that each region of the country faces different environmental challenges. As evidenced by the responses listed in Chapter 2: Surveys, the surveyed agencies generally allow their designers to select from the gamut of bridge deck joints. However, the compression seal seems to have fallen from favor as a preferred bridge deck joint type. The reported average life expectancy of compression seals was 12.65 years versus 18.01 years for strip seals, due to the reasons highlighted previously.

In addition, the trend seems to be toward eliminating deck joints altogether by utilizing the integral abutment design. A few agencies are using them as their sole selection for new construction.

**Conclusions**

It was conveyed during the interviews with ADOT personnel that there is a high turnover rate of bridge designers, construction inspectors, and maintenance personnel, and that the district maintenance organizations have limited funds.

Construction inspectors may not work on a bridge project for over two years and are often hired from temporary staffing agencies with little to no bridge deck joint experience.

The maintenance staff is responsible for many different tasks in a given day. They may have 5 years of maintenance experience without possessing any significant bridge experience. They are not afforded the benefit of becoming specialized in one very specific area, such as bridge deck joints. Because of the high turnover rate, very little mentoring takes place with the new hires.

Another problem area is the limited maintenance budget allotted to each district. Currently there is no program in place to fund the routine maintenance of bridges. Most districts only have enough resources to perform immediate safety-related activities, such as guide rail and attenuator repairs, while the districts in the northern part of the state spend most of their annual budget on snow removal.

Therefore, it is best to simplify the entire deck joint design, installation, and maintenance procedure, and to place more emphasis and funds on the design and construction installation process.

It should be noted that several of the agencies surveyed currently allow the usage of open finger joints for movement ratings greater than 4 inches, with the average percentage of new installation less than 5 percent of all bridge deck joints installed annually. The installation is difficult due to the very tight alignment tolerance of the steel fingers. In addition, there is an added requirement of a drainage trough to collect water and debris runoff. It was determined to not include open finger joints in the discussion for use in Arizona for these reasons and because they would add more complexity in the overall bridge deck joint implementation process.

**Recommendations for Selection of Deck Joint Type**

1. To eliminate bridge deck joint problems altogether, consider eliminating bridge deck joints when possible.
2. Due to the limited maintenance funds available and the limited bridge deck joint experience of the maintenance staff, use a poured silicone sealant joint for:
    - The replacement of failed compression seals.
    - All new construction with small movement ratings.

3. Discontinue the use of compression seals in new construction, replacement, and rehabilitation due to:
    - Tighter installation tolerance that causes the joint to fall out or become damaged by traffic.
    - Installation and setting problems during construction.
    - The collection of debris between the seal and the steel angle iron due to adhesion failure.
    - The lack of budget, expertise, and equipment of ADOT maintenance personnel to maintain and replace.
4. Use strip seals with rating of 4 inches for anticipated movements of 2 to 4 inches. Strip seal design will then be simply be a matter of:
    - Checking that the maximum movement (either perpendicular $MR_L$ or parallel $MR_T$ to the strip seal) is not exceeded.
    - Setting the opening at installation temperature.
5. To aid the inexperienced bridge deck joint designer, develop a design procedure and standard drawing for modular deck joints.
6. To standardize and simplify the selection of the bridge deck joint type, utilize the following joint selection table (Table 23).

**Table 23: Proposed ADOT joint selection table**

| Joint Movement Rating | Joint Type |
|---|---|
| < 2 inches | Poured Silicone Seal |
| 2 to 4 inches | 4 n Movement Rating Strip Seal |
| > 4 inches | Modular Joint |

## DETERMINATION OF BRIDGE DECK JOINT LOCATIONS

Another important decision to be made by the bridge designer that influences the selection of bridge deck joint type is determining the points of fixity. By carefully determining the points of fixity, the number and type of bridge decks can be optimized.

### Recommendations for the Determination of Joint Locations

Use the following guidelines in determining bridge deck joint locations:

- Deck joints should be avoided at points over public roadways, pedestrian crossings, railroads, or other areas that may be subject to public access.
- Deck joints should be avoided at or near points of sag vertical curves.
- For single span structures, fix the bearings at the abutment with the lowest elevation.

- Use continuity to reduce the number of joints on longer bridges.
- For two span structures, fix the bearings at the pier. Additional joints may be required at the piers if the maximum joint openings at the ends of the bridge exceed 4 inches.
- Structures with three or more spans need to be examined more closely with respect to the longitudinal stiffness of the bridge. The amount of expansion and contraction that needs to be accommodated at each location is determined from boundary conditions.
    - If possible, fix two piers; this will provide greater resistance to longitudinal movement of the bridge.
    - Tall, slender piers provide little longitudinal stiffness to the bridge.
    - Additional joints may be provided at piers to split the superstructure into segments if the maximum joint openings at the ends of the bridge exceed 4 inches. Examine each segment for fixity and movement.

## DETERMINATION OF POINTS OF FIXITY

To determine movements for bearings and joints, the point of fixity must be determined for the bridge or bridge segment. The point of fixity is the theoretical location on the bridge that would not move horizontally as the bridge experiences temperature changes. The substructure stiffness should typically be used to locate the point of fixity of the bridge. When the fixity point is incorrectly anticipated, it will greatly reduce the life of the joint.

### Recommendations for Determination of Points of Fixity

On less complex structures, determining the point of fixity and the contributing length to temperature movement can often be accurately calculated based on observations. Another method that is accurate enough in most cases is the approximate method.

However, on complex and multiple continuous structures, the point of fixity is not as obvious or easily calculated. In theses situations, it is recommended that the designer perform stiffness calculations to determine the tributary length of movement for each bridge deck joint on the structure.

## MOVEMENT RATING CALCULATIONS

A critical factor in the success of any bridge deck joint is correctly anticipating the movement rating. Several factors must be accounted for during the design process Photograph 7).

**Photograph 7: Joint measurement prior to setting**

### Temperature Changes

The first and perhaps the most important factor is accurately predicting the movement due to the change in temperature, degrees Fahrenheit (°F).

AASHTO Section 3.16 (Table 24) recommends:

- The rise and fall in temperature shall be fixed for the locality in which the structure is to be constructed and shall be computed from an assumed temperature at the time of erection.
- Due consideration shall be given to the lag between air temperature and the interior temperature of massive concrete members or structures.

**Table 24: AASHTO recommended temperature ranges**

| Climate | Concrete | | Steel | |
|---|---|---|---|---|
| | Rise (° F) | Fall (° F) | Range | Total (° F) |
| Moderate | 30 | 40 | 0 to 120 | 120 |
| Cold | 35 | 45 | -30 to 120 | 150 |

ADOT Bridge Practice Guidelines recommend different temperature ranges based on superstructure material and elevation above sea level (Table 25) which translates into temperature ranges (Table 26).

**Table 25: ADOT Bridge Practice Guidelines recommended design temperatures**

| Elevation (feet) | Mean Temperature (° F) | Concrete | | Steel | |
|---|---|---|---|---|---|
| | | Rise (° F) | Fall (° F) | Rise (° F) | Fall (° F) |
| < 3000 | 70 | 30 | 40 | 60 | 60 |
| 3000 – 6000 | 60 | 30 | 40 | 60 | 60 |
| > 6000 | 50 | 35 | 45 | 70 | 80 |

**Table 26: Translated ADOT Bridge Practice Guidelines recommended design ranges**

| Elevation (feet) | Mean Temperature (° F) | Concrete | | Steel | |
|---|---|---|---|---|---|
| | | Range (° F) | Total (° F) | Range (° F) | Total (° F) |
| < 3000 | 70 | 30 to 100 | 70 | 10 to 130 | 120 |
| 3000 – 6000 | 60 | 20 to 90 | 70 | 0 to 120 | 120 |
| > 6000 | 50 | 5 to 85 | 80 | -30 to 120 | 150 |

Recognizing that uncertainty exists in determining the actual temperature of the structure at the time of installation and the mean temperature of the specified site, ADOT's Bridge Practice Guidelines recommends adding 10 degrees Fahrenheit to both the published rise and fall temperature ranges (Table 27).

**Table 27: ADOT Bridge Practice Guidelines recommended design ranges with 10° F uncertainty**

| Elevation (feet) | Mean Temperature (° F) | Concrete | | Steel | |
|---|---|---|---|---|---|
| | | Range (° F) | Total (° F) | Range (° F) | Total (° F) |
| < 3000 | 70 | 20 to 110 | 90 | 0 to 140 | 140 |
| 3000 – 6000 | 60 | 10 to 100 | 90 | -10 to 130 | 140 |
| > 6000 | 50 | -5 to 95 | 100 | -40 to 130 | 170 |

## Recommendation for Temperature Changes

To simplify the process, it is recommend the sole use of the following (Table 28) to select the design temperature range and the mean temperature. The temperature range values are based on the relationship between the record highs and lows for each region and the effective behavior of the bridge material due temperature.

**Table 28: Recommended design temperature range table**

| Elevation (feet) | Mean Temperature (° F) | Concrete | | Steel | |
|---|---|---|---|---|---|
| | | Range (° F) | Total (° F) | Range (° F) | Total (° F) |
| < 3000 | 70 | 25 to 120 | 95 | 20 to 140 | 120 |
| 3000 – 6000 | 60 | 10 to 115 | 105 | 0 to 130 | 130 |
| > 6000 | 50 | -15 to 105 | 120 | -25 to 120 | 145 |

## Estimating the Effects of Shrinkage and Creep in Concrete

Concrete properties such as volume, strength, and stiffness gradually change over time and are dependent on many factors. It is difficult to predict the exact effect of all the factors, therefore, estimates are usually made. In addition to movement due to temperature, two main factors that effect bridge deck joint movements are the shrinkage and creep of the concrete.

### Shrinkage

Concrete shrinkage is the decrease in volume under constant temperature due to the loss of moisture after the concrete has hardened. Shrinkage is dependent on the:

- Water content of the fresh concrete.
- Type of cement and aggregate.
- Temperature and humidity at time of placement.
- Amount of reinforcement used.
- Curing procedure.
- Volume-to-surface-area ratio.

### Creep

Creep is an increase in deformation with time due to applied load. It is dependent on all of the same factors as shrinkage and the following additional factors:

- Magnitude and duration of the compressive stresses.
- Compressive strength of the concrete.
- Maturity of concrete (days).
- Age of the concrete when the sustained load is initially applied.

ADOT Bridge Practice Guidelines currently recommend the following for the effects of shrinkage and creep (Table 29):

**Table 29: Current ADOT Bridge Practice Guidelines for the effects of shrinkage and creep**

| Situation | Shortening (foot/foot) |
|---|---|
| Reinforced Concrete Members | 0.00020 |
| Pre-cast Pre-stressed Concrete Members | 0.00021 |
| Cast-in-Place Post-tensioned Members | 0.00042 |

## Recommendations for Estimating the Effects of Shrinkage and Creep

The effects of shrinkage and creep should be based on the shape (volume-to-surface-area ratio), material, and construction of the superstructure.

It is recommended to use the following equation to calculate the closing movement due to long term shrinkage and creep:

$$\Delta_{\text{Shrinkage \& Creep}} = (0.0002)(L)(\mu)$$

**Equation 1**

where:

| | | |
|---|---|---|
| $\Delta_{\text{Shrinkage \& Creep}}$ | = | Change in length due to creep |
| 0.0002 | = | Shrinkage and creep coefficient |
| L | = | Tributary bridge length for expansion joint |
| $\mu$ | = | Shrinkage and creep factor (Table 30) |

**Table 30: Recommended μ factor to be used in Equation 1**

| Shape | Material | Construction | μ Factor |
|---|---|---|---|
| Slab | Reinforced Concrete | Cast-in-place | 1.0 |
| Slab | Pre-tensioned Concrete | Pre-cast | 0.5 |
| Box Girder | Reinforced Concrete | Cast-in-place | 0.8 |
| Box Girder | Post-tensioned Concrete | Cast-in-place | 1.5 |
| Closed Girder | Pre-stressed Concrete | Pre-cast | 0.5 |
| Closed Girder | Reinforced Concrete | Cast-in-place | 0.8 |
| Girder | Steel | N/A | 0.0 |

## Recommendations for Calculating Movement Rating

To simplify and standardize the movement rating calculations, we recommend the usage of a prescribed design procedure, as outlined in Figures 6 through 9, that:

- Prompts the user to input all of the criteria required for design.
- Recommends the type of bridge deck joint to use.
- Calculates the temperature installation table for poured seals and strip seals.
- Verifies that normal and transverse movements are not exceeded for strip seals.

**Project:** _____

**Subject:** _____

**Sheet No:** _____

**Computed By:** _____ **Checked By:** _____ **Date:** _____

**REFERENCES**

[1] AASHTO Standard Specifications for Highway Bridges, 17th edition
[2] ADOT Bridge Group, Bridge Practice Guidelines
[3] ADOT Standard Drawing SD 3.02
[4] Project Plans

| **INPUT** | | **Reference or Comment** |
|---|---|---|
| **1. General** | | |
| Tributary bridge length for expansion joint L (feet) = | 200 | |
| Superstructure material type = | Steel | |
| Coefficient of thermal expansion, $\alpha$ (per deg F) = | 0.0000060 | See Thermal Expansion Coefficients worksheet tab |
| Shrinkage & creep coefficient (inch/inch) = | 0.0002 | |
| Shrinkage & creep factor (inch/inch) = | 1.0 | See Shrinkage Factors worksheet tab |
| Elevation of bridge (feet) = | 2000 | |
| Mean temperature (deg F) = | 70 | See Design Temperature Range worksheet tab |
| Rise (deg F) = | 30 | See Design Temperature Range worksheet tab |
| Fall (deg F) = | 40 | See Design Temperature Range worksheet tab |
| Bridge Skew (deg) = | 20 | Reference [4]: General Elevation & Plan Sheet |
| **2. For Poured Seals ONLY** | | |
| Minimum setting opening normal to joint (inch) = | 0.75 | (Preferred installation opening is 1.0 inches) |
| Opening normal to joint at full closure (inch) = | 0.25 | |
| **3. For Strip Seals ONLY** | | |
| Minimum setting opening normal to joint (inch) = | 2.00 | (Preferred installation opening is 2.0 inches) |
| Opening normal to joint at full closure (inch) = | 0.25 | |

**Figure 6: Recommended design procedures, Page 1**

Project: _____

Subject: _____

_____ Sheet No: _____

_____

Computed By: _____ Checked By: _____ Date: _____

**MOVEMENT RATING CALCULATIONS** **Reference or Comment**

**1. Calculate movement rating: MR = $\Delta_{temp} + \Delta_{creep\ \&\ shrinkage}$.**

| | | |
|---|---|---|
| Design temperature range (deg F) = | 130 | For information only (not used in below calculations) |
| Opening Movement | | |
| $\Delta_{temp\text{-}fall}$ (inch) = | 0.58 | Due to temperatrue fall, Reference [2]: Page 14-5 |
| Closing Movement | | |
| $\Delta_{temp\text{-}rise}$ (inch) = | 0.43 | Due to temperature rise, Reference [2]: Page 14-5 |
| $\Delta_{shrinkage\ \&\ creep}$ (inch) = | 0.48 | Due to creep and shrinkage of concrete, Reference [2]: Page 14-5 |
| Total Movement Along the Centerline of Bridge | | |
| MR (inch) = | 1.49 | Along bridge centerline |
| Movements with Respect to Deck Joint | | |
| $MR_L$ (inch) = | 1.40 | Movement normal to joint |
| $MR_T$ (inch) = | 0.51 | Movement transverse to joint |

**2. Joint type selection**

Maximum movement (in) = 1.49

| Movement Rating | Preferred Joint Type |
|---|---|
| < 2" | Poured Silicone Sealant |
| 2" to 4" | 4" Strip Seal |
| > 4" | Modular Joint |

**Figure 7: Recommended design procedures, Page 2**

Project: _____

Subject: _____

Sheet No: _____

Computed By: _____ Checked By: _____ Date: _____

**POURED SEAL SETTING TABLE** **Reference or Comment**

**1. Calculate joint width (along the centerline of bridge) at the time of gland installation at design mean temperature.**

| | | |
|---|---|---|
| Minimum setting opening normal to joint (inch) = | 0.75 | |
| Opening normal to joint at full closure (inch) = | 0.25 | |
| | 1.00 | Normal to joint |
| Opening along bridge centerline (inch) = | 1.06 | To account for bridge skew |

**2. Calculate the joint width at the time of steel extrusion installation.** Only includes temperature effects

| | Temp (deg F) | e (inch), along | e (inch), normal to joint |
|---|---|---|---|
| | 110 | **0.52** | 0.49 |
| | 100 | **0.66** | 0.62 |
| | 90 | **0.79** | 0.75 |
| | 80 | **0.93** | 0.87 |
| Design mean temperature | **70** | **1.06** | **1.00** |
| | 60 | **1.20** | 1.13 |
| | 50 | **1.33** | 1.25 |
| | 40 | **1.47** | 1.38 |
| | 30 | **1.61** | 1.51 |
| | 20 | **1.74** | 1.64 |
| | 10 | **1.88** | 1.76 |
| | 0 | **2.01** | 1.89 |

**Figure 8: Recommended design procedures, Page 3**

**Project:** _____

**Subject:** _____

**Sheet No:** _____

**Computed By:** _____ **Checked By:** _____ **Date:** _____

**STRIP SEAL SIZING AND SETTING TABLE** **Reference or Comment**

Seal rating of four inches is used even if the predicted movement is considerably less. Strip seal design will simply be a matter of checking that the movement rating of the seal are not exceeded and calculating the setting dimension at installation temperature.

**1. Verify that the manufacturer provided movement ratings of the seal are not exceeded.**

| | | | | |
|---|---|---|---|---|
| $MR_L$ Maximum (in) = | 4.00 | > | 1.40 | **OK** |
| $MR_T$ Maximum (in) = | 2.00 | > | 0.51 | **OK** |

**2. Calculate joint width (along the centerline of bridge) at the time of gland installation at design mean temperature.**

| | | |
|---|---|---|
| Minimum setting opening normal to joint (inch) = | 2.00 | |
| Opening normal to joint at full closure (inch) = | 0.25 | |
| | 2.25 | Normal to joint |
| Opening along bridge centerline (inch) = | 2.39 | To account for bridge skew |

**3. Calculate the joint width at the time of steel extrusion installation.** Only includes temperature effects

| | Temp (deg F) | e (inch), along | e (inch), normal to joint |
|---|---|---|---|
| | 110 | 1.85 | 1.74 |
| | 100 | 1.99 | 1.87 |
| | 90 | 2.12 | 2.00 |
| | 80 | 2.26 | 2.12 |
| Design mean temperature | **70** | **2.39** | **2.25** |
| | 60 | 2.53 | 2.38 |
| | 50 | 2.67 | 2.50 |
| | 40 | 2.80 | 2.63 |
| | 30 | 2.94 | 2.76 |
| | 20 | 3.07 | 2.89 |
| | 10 | 3.21 | 3.01 |
| | 0 | 3.34 | 3.14 |

**Figure 9: Recommended design procedures, Page 4**

## ANGLE ARMOR MODIFICATIONS

### Background

Angle armor is used to prevent the concrete deck joint edges from spalling on bridges subjected to large traffic volumes, heavy truck traffic, and snowplows (Photograph 8).

**Photograph 8: Failed concrete header and angle armor**

One of the problems mentioned by the majority of ADOT construction personnel was that the concrete underneath the angle armor was not properly consolidated. This condition eventually leads to surface spalling. The spalling causes the angle iron to deflect and vibrate under live load since it is not properly supported anymore. The angle iron will eventually crack due to fatigue and then become a safety hazard to the public.

### Recommendation

The current ADOT Bridge Practice Guidelines states, "Joint-edge armor embedded in concrete should have ½-inch minimum diameter vertical vent holes spaced at no more than 12 inches."

The details on the Bridge Group Structure Drawings:

- Calls out ¾-inch diameter holes spaced at 12 inches for strip seals on the horizontal leg.
- Does not call out any size and spacing requirement for compression seals drawing on the horizontal leg.
- Neither drawing mentions the vertical vent hole requirement.

It is recommended to amend the ADOT Bridge Practice Guideline statement to read, "Joint-edge armor embedded in concrete should have ½-inch minimum diameter vent holes spaced at no more than 9 inches on the horizontal leg," and to properly detail these requirements on the Structure Detail drawings.

Please note additional recommendations are included in:

Chapter 5: Construction Inspection

The inspector shall verify:

1. Concrete is placed in all voids below and hand packed, if necessary, behind the guard angle members.
2. Adequate vibration or other consolidation methods are used for the concrete in the joint with special emphasis on the area under the angle iron.
3. Joint is inspected for voids by sounding the guard angle with a hammer according to project plans.

Chapter 6: Specifications

1. Require that retainer rails be fabricated with bridge grade (ASTM Designation) A709, Grade 50 steel.
2. For northern Arizona applications, specify steel heats that require AASHTO Temperature Zone 2 Charpy V-notch impact requirements.

## ANCHOR MODIFICATIONS

### Background

As mentioned in the above section, one of the major problems that occurs in service is when the concrete spalls out from under the angle iron. This leads to an increase in the live load impact that the bridge deck joint assembly is subjected to and results in the anchorage becoming loose.

## Current ADOT Practice

The current ADOT anchor alternatives for strip seals are shown in Figure 10.

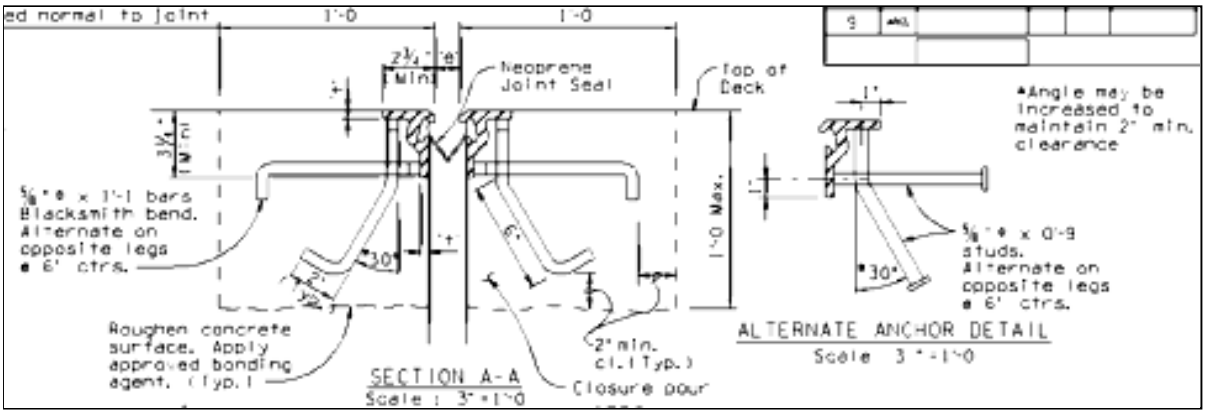


**Figure 10: Current ADOT strip seal anchorage details**

## Other Agency Practices

The anchorage details varied somewhat among the agencies surveyed. Several of the agencies utilize a detail with three studs welded to the steel extrusions (Table 31). A couple of agencies use a single horizontal bar welded to the steel extrusion (Table 32) while others use a #5 rebar bent into a loop and welded to a gusset plate that is attached to the steel extrusions (Table 33). See Appendix E for other examples of anchor details used by respondents to the national survey.

## Recommendations

1. Continue to use the current ADOT anchorage detail for bridges with a low volume of truck traffic and on rural roads.
2. Develop detail similar to the one in Table 33: for use on interstates and roads with a high volume of truck traffic

.

**Table 31: Three stud anchorage details**

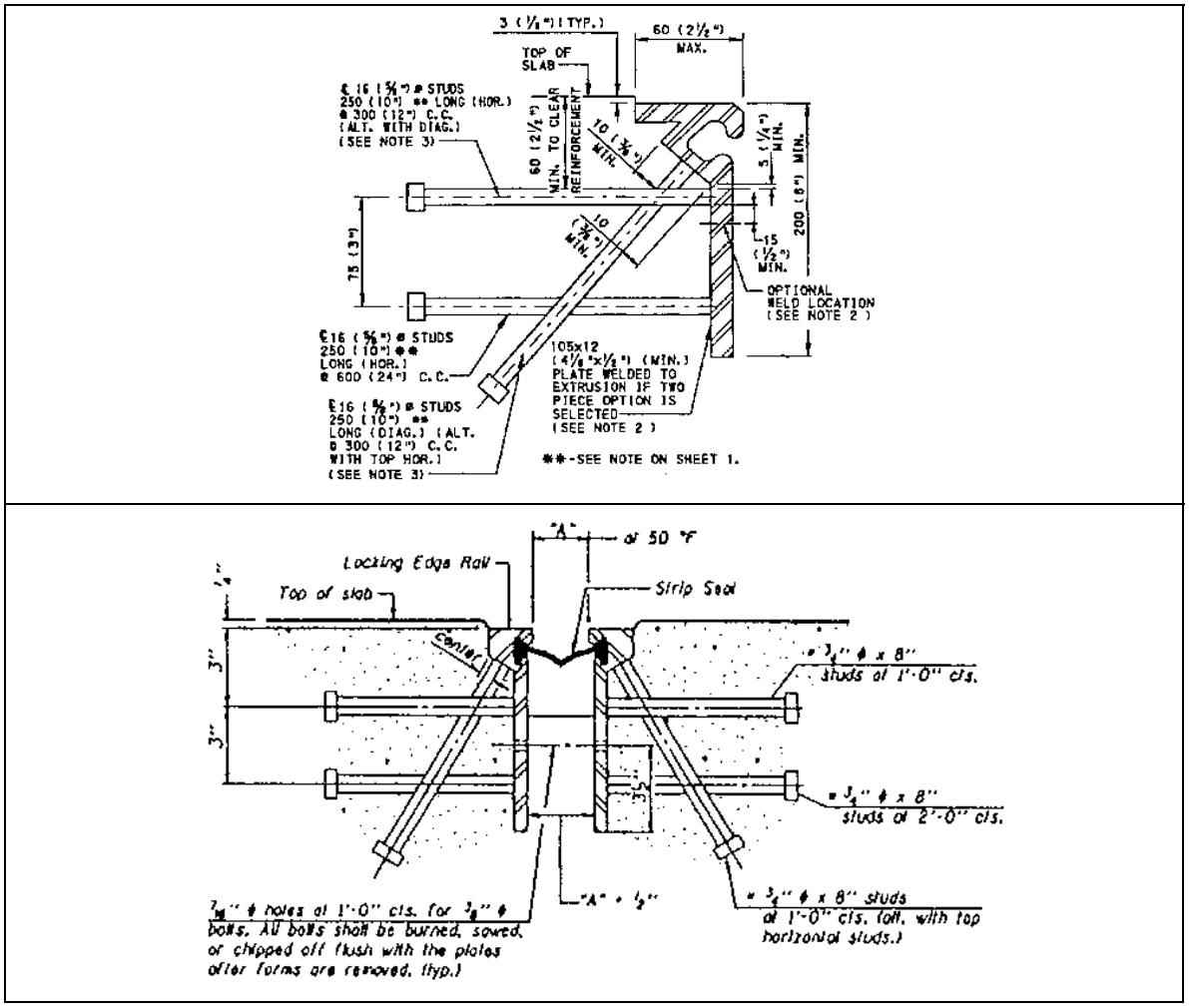


**Table 32: One stud anchorage detail**

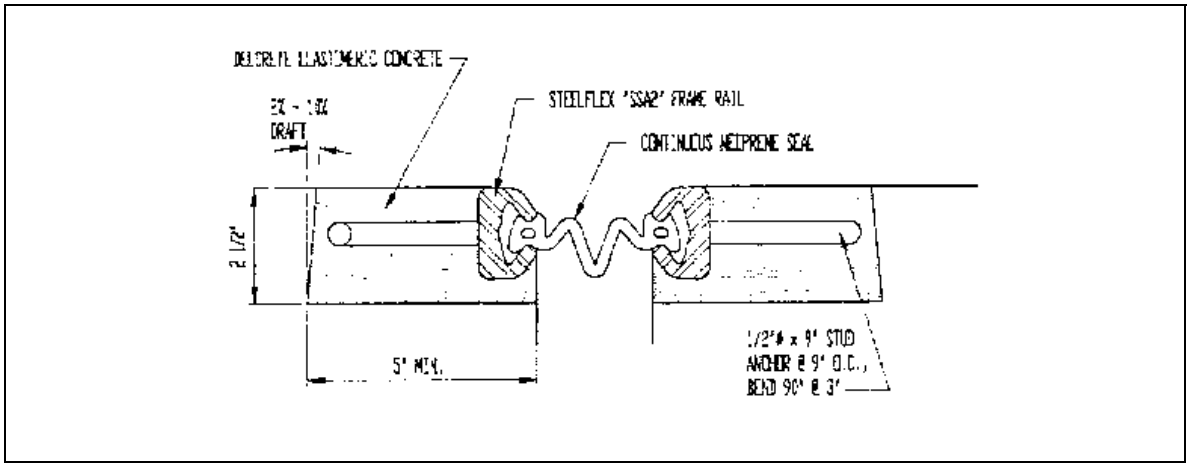

**Table 33: Looped rebar anchorage**

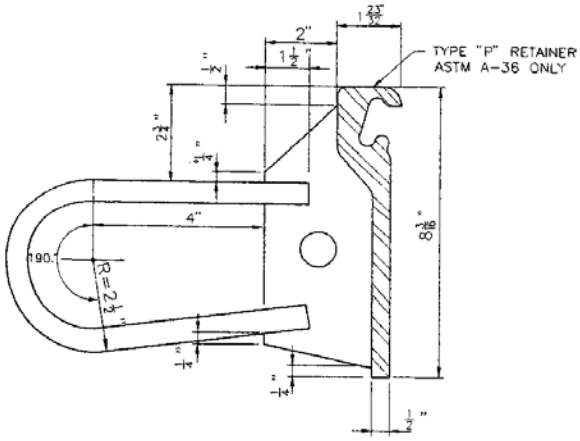


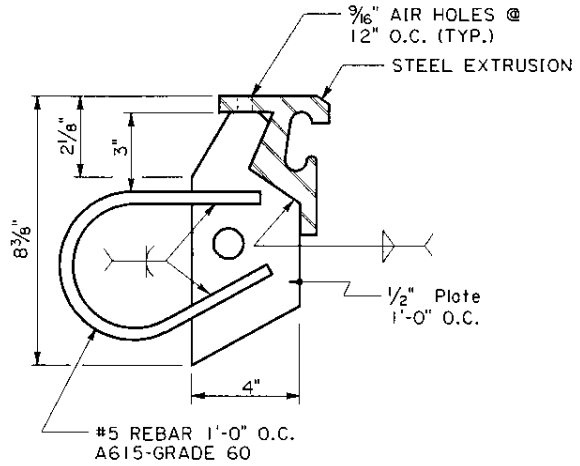


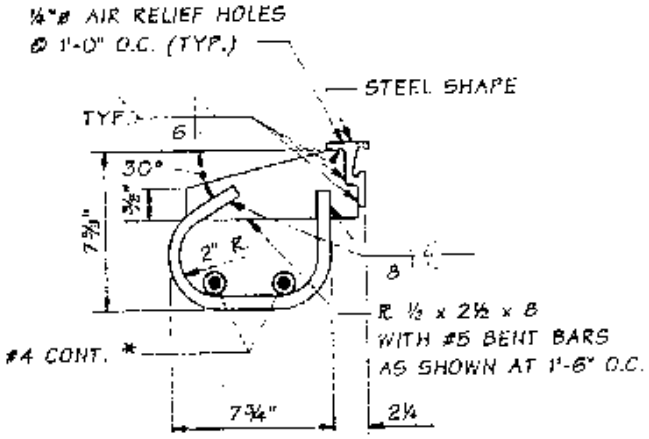

## STEEL REINFORCEMENT MODIFICATIONS

### Background

ADOT construction personnel stated the reinforcement extruding from the concrete deck often interferes with the anchor system of the deck joint assembly. In some cases, the contractor needs to flame cut the deck reinforcing steel to be able to place the assembly. It was noted that the contractor often does this with the permission of the ADOT inspector on sight (Photographs 9 and 10).

**Photograph 9: Deck joint under construction**

**Photograph 10: Close-up of blockout area**

### Recommendation

It is recommended that once the detail for the anchorage of the deck joint assembly is decided upon by the ADOT Bridge Group, that a schematic detailing the deck reinforcing steel and assembly anchorage (similar to Figure 11) is added to the standard drawings for deck joints.

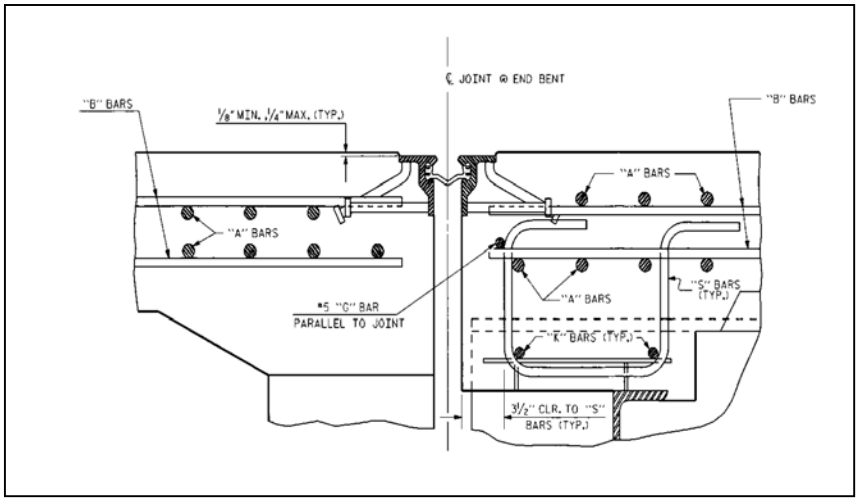


**Figure 11: Example of recommended detail for blockout area**

## SNOWPLOW PROTECTION

### Background

A common problem specific to the high elevations found in northern Arizona was protecting the bridge deck joints from snowplow damage (Photograph 11).

**Photograph 11: Bridge deck joint damaged by snowplow**

### Current ADOT Practices

Currently no ADOT snowplow detail exists, but the ADOT Bridge Practice Guidelines recommends:

- Concrete buffer strips 12 to 18 inches wide with joint armor recessed ¼ inch to $^{3}/_{8}$ inch below the surface of such strips.
- Tapered steel ribs protruding up to ½ inch above roadway surfaces (to lift the plow blades as they pass over the joints).
- Additional precautions where the skew of the joints coincides with the skew of the plow blades, typically 30 to 35 degrees.
- Closely coordinating details for snowplow protection with the ADOT Bridge Group and the district.

### Other Agency Practices

The most common design detail to protect the neoprene seal from snow damage is to place the joint below steel sliding plates. Several of the cold climate states have used the detail for many years with good results. Examples of the details are shown in Table 34.

.

In the past, ADOT has installed steel sliding plate bridge deck joints without the neoprene seal. Hundreds of bridges with steel sliding plate deck joints are still in service and performing well. According to an ABISS query, 86 percent of the open type bridge deck joints (which include sliding plate joints) are in good condition, with only 2 percent rated in poor condition (Photograph 12).

**Recommendations**

1. Install highly visible markers at bridge deck joints to remind the snowplow operators to raise their blades.
2. When possible, avoid bridges with skew angles between 28 and 35 degrees.
3. As recommended earlier in this chapter, discontinue the use of compression seals in new construction, replacement, and rehabilitation. The seals are often overcompressed, which causes them to protrude above the armor angle and become damaged by the snowplow blades.
4. Currently the ADOT Bridge Group recommendation of using tapered steel ribs to lift the snowplow blade has not been regularly used, if at all. We recommend creating a detail that welds steel ribs to steel deck joint assembly and places them outside of the wheel path of vehicles.
5. Consider developing and implementing a detail (as a demonstration project) similar to the bridge deck joints highlighted in Table 34.

**Photograph 12: Repair of bridge deck joint due to snowplow**

**Table 34: Snowplow resistant details**

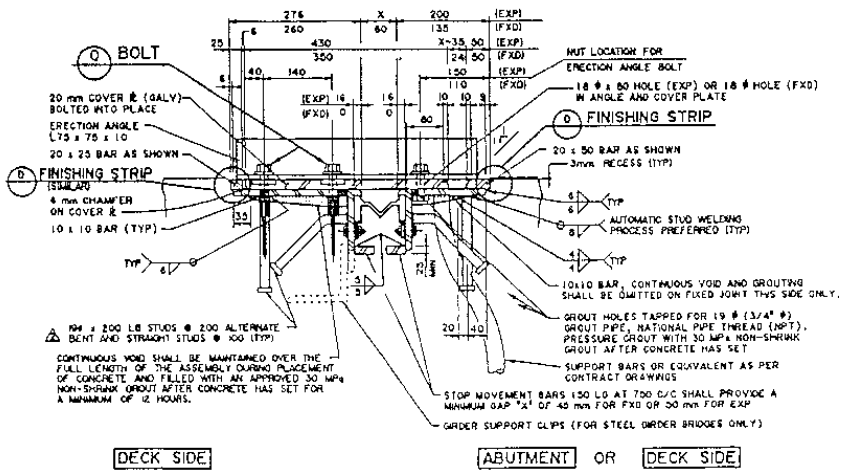


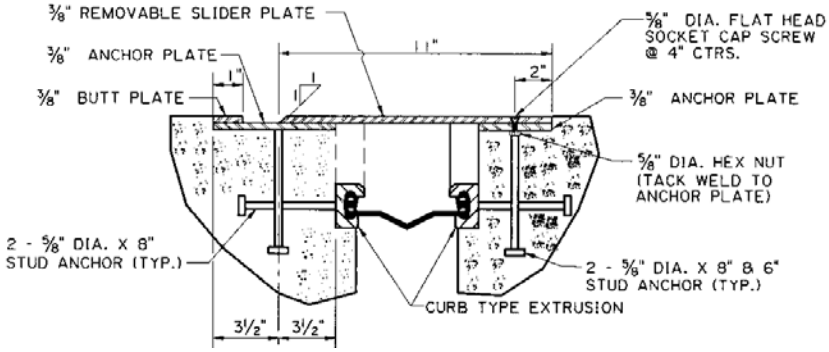


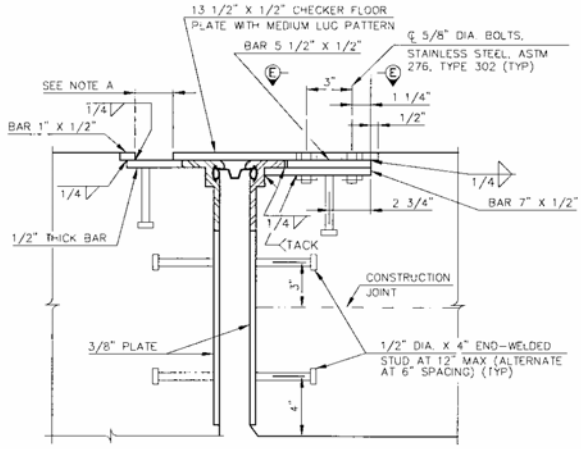

## PAVING OVER DECK JOINTS

### Background

Unaware of the adverse impact, maintenance personnel often overlay bridge deck joints during roadway resurfacing projects. The asphalt pavement cannot accommodate large movements of the bridge deck joint. As a result, the pavement over the deck joint fails and may induce unaccounted for stresses in the abutment backwall or superstructure. The failure also allows water and deicing chemicals (if present) to penetrate through the joint.

### Recommendations

It is recommended that a detail (similar to the one currently being used for the placement of asphaltic rubber on Metro Phoenix bridges, Figure 12) be developed to aid the maintenance staff when performing roadway-resurfacing projects.

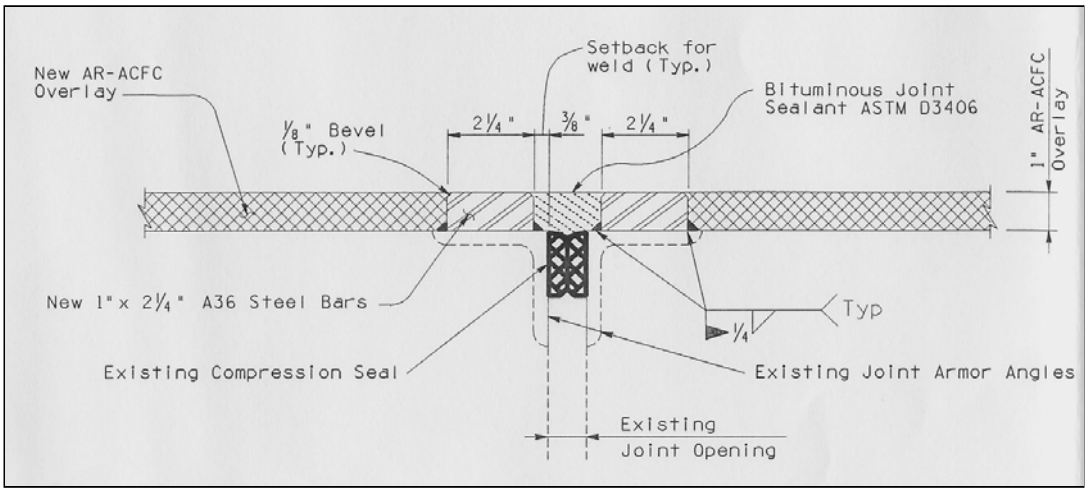


**Figure 12: Proposed ADOT detail for AR-ACRC overlay of bridge deck joint**

It is also recommended that in addition to the above detail, a specification be added to both the ADOT Standard Specifications and the Construction of Roads and Bridges document, stating the bridge deck joints should not be paved over with any type asphalt or bituminous material.

Please note that additional recommendations are made in Chapter 7: Training.

# CHAPTER 5: CONSTRUCTION INSPECTION

## BACKGROUND

As discussed in Chapter 2: Surveys, a high rate of turnover exists among ADOT construction personnel. Another hurdle that ADOT must tackle is the fact that when positions become vacant, they are often not re-staffed due to budget constraints. This leads directly to another problem in that they are forced to hire construction inspectors from temp agencies that often have limited bridge or bridge deck joint experience. It was conveyed during the ADOT interviews that the vast majority of construction inspectors used on bridge projects in Arizona have less than 5 years of experience in all aspects of construction inspection.

The drawback this creates is a lack of information transfer from senior inspectors to the novice inspectors. The senior staff has their own project responsibilities and often do not have the time or desire to mentor yet another junior inspector. Therefore, it is not uncommon for a bridge deck joint installation to be overseen by an individual who has never witnessed a single installation.

## CONCLUSION

An easy to use information transfer mechanism to efficiently educate inexperienced bridge construction inspectors would greatly increase the quality of bridge deck joint installations.

## RECOMMENDATION

The following prescribed checklist includes all of the procedures required during installation and would significantly assist the construction inspector in ensuring that the bridge deck joint is correctly installed according to specifications.

It was learned during this research project that the ADOT Construction Group was creating a set of checklists to aid construction inspectors in several different aspects of bridge construction, which included bridge deck joint installation.

The ADOT Construction Group provided a copy of their final version of the bridge deck joint installation checklist (Appendix D) to assist in the study. The checklist was modified from the original based on research and recommendations made in this report.

Please note additional recommendations regarding construction installation and the aforementioned checklist are included in Chapter 6: Specifications and Chapter 7: Training.

| | |
|---|---|
| Structure Name: | |

| | |
|---|---|
| Structure Number: | |

| | |
|---|---|
| Location Begin Station: | |

| | |
|---|---|
| Location End Station: | |

| | |
|---|---|
| TRACS Number: | |

| | |
|---|---|
| Prime Contractor: | |

| | |
|---|---|
| Subcontractors: | |

| | |
|---|---|
| Joint Type: | |

| | |
|---|---|
| Joint Manufacturer: | |

| | |
|---|---|
| Construction Inspections: | |
| | |
| | |

| | |
|---|---|
| References: | Project Plans |
| | Shop Drawings |
| | Bridge Group Structure Detail Drawings |
| | ADOT Standard Specifications for Road & Bridge Construction |

| Weight legend | | |
|---|---|---|
| 1 | Administrative | Not directly affecting the construction product |
| 2 | Minor | Not materially affecting the performance of the product, such as aesthetic features and certifications |
| 4 | Major | Necessary for the prevention of substantial financial loss or shortened service life |
| 8 | Critical | The requirement is necessary to the preservation of human life |

| | | | |
|---|---|---|---|
| **1** | **Completed By:** _____ **on** _____ / _____ / _____ ☐ N/a | | **Weight:** **2** |
| | **Attribute:** | Ensure that a copy of the approved shop drawings for the correct type of bridge deck joint assembly (poured seal, strip seal, or modular joint) are on file. | |
| | **References:** | • Specifications 601-3.04 (B)(3)(b) or special provisions<br>• Project plans<br>• Approved shop drawings | |
| | **Comments:** | | |

| | | | |
|---|---|---|---|
| **2** | **Completed By:** _____ **on** _____ / _____ / _____ ☐ N/a | | **Weight:** **2** |
| | **Attribute:** | Approved certificates of compliance for correct type of bridge deck joint assembly (poured seal, strip seal, or modular joint) are on file. | |
| | **References:** | • Specifications 1011-3, 4 & 5<br>• Project plans<br>• Approved shop drawings | |
| | **Comments:** | | |

| | | | |
|---|---|---|---|
| **3** | **Completed By:** _____ **on** _____ / _____ / _____ ☐ N/a | | **Weight:** **4** |
| | **Attribute:** | The contractor supplied a complete set of written installation instructions to the Project Manager is on file at least 14 days prior to the installation of the bridge deck joint assembly (poured seal, strip seal, or modular joint). | |
| | **References:** | • New recommended specification | |
| | **Comments:** | | |

| | | | |
|---|---|---|---|
| **4** | **Completed By:** _____ **on** _____ / _____ / _____ ☐ N/a | | **Weight:** **4** |
| | **Attribute:** | The contractor provided manufacturer's technical representative is scheduled to be on site for the complete installation of the joints, to give advice and instruction to the construction personnel, and to ensure a satisfactory joint installation. | |
| | **References:** | • New recommended specification | |
| | **Comments:** | | |

| | | | |
|---|---|---|---|
| **5** | **Completed By:** _____ **on** _____ / _____ / _____ ☐ N/a | | **Weight: 4** |
| | **Attribute:** | Strip seal supplied full length without splices unless otherwise indicated in the project plans. | |
| | **References:** | • Bridge Group, Structure Detail Standard Drawing 3.02<br>• Project plans | |
| | **Comments:** | | |

| | | | |
|---|---|---|---|
| **6** | **Completed By:** _____ **on** _____ / _____ / _____ ☐ N/a | | **Weight: 4** |
| | **Attribute:** | One sample (18 inches or longer) of the seal material for each type and size of seal used on the project is provided. | |
| | **References:** | • Specifications 601-3.04 (B)(3)(a)<br>• Specifications 1006-5.02 | |
| | **Comments:** | | |

| | | | |
|---|---|---|---|
| **7** | **Completed By:** _____ **on** _____ / _____ / _____ ☐ N/a | | **Weight: 4** |
| | **Attribute:** | For the blockout area, reinforcing steel was checked for quantity, size, spacing, clearance, and correct placement. | |
| | **References:** | • Project plans<br>• Shop drawings | |
| | **Comments:** | | |

| | | | |
|---|---|---|---|
| **8** | **Completed By:** _____ **on** _____ / _____ / _____ ☐ N/a | | **Weight: 2** |
| | **Attribute:** | For the blockout area, construction joint surfaces that have been in place more than 8 hours, are cleaned by abrasive blast methods. | |
| | **References:** | • Specifications 601-3.04A | |
| | **Comments:** | | |

| | | | |
|---|---|---|---|
| **9** | **Completed By:** _____ **on** _____ / _____ / _____ ☐ N/a | | **Weight:** **4** |
| | **Attribute:** | Contractor and ADOT agree on final setting temperature. | |
| | **References:** | • New recommended specification | |
| | **Comments:** | | |

| | | | |
|---|---|---|---|
| **10** | **Completed By:** _____ **on** _____ / _____ / _____ ☐ N/a | | **Weight:** **4** |
| | **Attribute:** | Contractor and ADOT agree on the final “e” dimension. | |
| | **References:** | • Project plans<br>• Specifications 601-3.04 (B) | |
| | **Comments:** | | |

| | | | |
|---|---|---|---|
| **11** | **Completed By:** _____ **on** _____ / _____ / _____ ☐ N/a | | **Weight:** **2** |
| | **Attribute:** | Prior to the placing the concrete, the blockout surfaces were cleaned of all dust and abrasive material and coated with an approved adhesive. | |
| | **References:** | • Specifications 601-3.04 (B)(3)(g) | |
| | **Comments:** | | |

| | | | |
|---|---|---|---|
| **12** | **Completed By:** _____ **on** _____ / _____ / _____ ☐ N/a | | **Weight:** **4** |
| | **Attribute:** | Prior to placing concrete, the joint opening was checked and/or adjusted in accordance with the temperature correction chart (“e” value). | |
| | **References:** | • Project plans<br>• Specifications 601-3.04 (B) | |
| | **Comments:** | | |

| | | | |
|---|---|---|---|
| **13** | **Completed By:** _____ **on** _____ / _____ / _____ ☐ N/a | | **Weight: 4** |
| | **Attribute:** | Prior to placing the concrete and installing the elastomer portion of the assembly, joints-to-be-sealed were covered and protected at all times. | |
| | **References:** | • Specifications 601-3.04 (B)(3)(g) | |
| | **Comments:** | | |

| | | | |
|---|---|---|---|
| **14** | **Completed By:** _____ **on** _____ / _____ / _____ ☐ N/a | | **Weight: 4** |
| | **Attribute:** | All delivered concrete is in accordance with project plans. | |
| | **References:** | • Project Plans | |
| | **Comments:** | | |

| | | | |
|---|---|---|---|
| **15** | **Completed By:** _____ **on** _____ / _____ / _____ ☐ N/a | | **Weight: 2** |
| | **Attribute:** | Immediately prior to concrete placement, the formed surfaces were sprinkled with cool water. | |
| | **References:** | • Specifications 1006-5.02 | |
| | **Comments:** | | |

| | | | |
|---|---|---|---|
| **16** | **Completed By:** _____ **on** _____ / _____ / _____ ☐ N/a | | **Weight: 2** |
| | **Attribute:** | Concrete is placed in all voids below (and hand packed as necessary) behind the guard angle members. | |
| | **References:** | None | |
| | **Comments:** | | |

| | | | |
|---|---|---|---|
| **17** | **Completed By:** _____ **on** _____ / _____ / _____ ☐ N/a | | **Weight: 4** |
| | **Attribute:** | Adequate vibration or other consolidation methods are used for the concrete in the joint with special emphasis on the area under the angle iron.? | |
| | **References:** | • Construction Manual 601-3.03 (D) | |
| | **Comments:** | | |

| | | | |
|---|---|---|---|
| **18** | **Completed By:** _____ **on** _____ / _____ / _____ ☐ N/a | | **Weight: 4** |
| | **Attribute:** | Joint is inspected for voids by sounding the guard angle with a hammer according to project plans? | |
| | **References:** | • Project plans | |
| | **Comments:** | | |

| | | | |
|---|---|---|---|
| **19** | **Completed By:** _____ **on** _____ / _____ / _____ ☐ N/a | | **Weight: 4** |
| | **Attribute:** | To ensure a smooth finished joint, the top elevation of the angle iron was checked longitudinally and transversely with a straight edge.? | |
| | **References:** | • Specifications 601-3.05 (D) | |
| | **Comments:** | | |

| | | | |
|---|---|---|---|
| **20** | **Completed By:** _____ **on** _____ / _____ / _____ ☐ N/a | | **Weight: 4** |
| | **Attribute:** | Concrete cylinder samples are taken for compression tests. | |
| | **References:** | • New specification for blockout are concrete | |
| | **Comments:** | | |

| | | | |
|---|---|---|---|
| **21** | **Completed By:** _____ **on** _____ / _____ / _____ ☐ N/a | | **Weight: 4** |
| | **Attribute:** | After the initial concrete set, bolts holding the joint together were loosened or removed to allow for movement. | |
| | **References:** | • Bridge Group, Structure Detail Standard Drawing 3.01 | |
| | **Comments:** | | |

| | | | |
|---|---|---|---|
| **22** | **Completed By:** _____ **on** _____ / _____ / _____ ☐ N/a | | **Weight: 4** |
| | **Attribute:** | After installation, the deck joint seal element was checked for perforations or tearing by performing a leakage test (if found, will be cause for rejection of the seal). | |
| | **References:** | • Specifications 601-3.04 (B)(3)(g) | |
| | **Comments:** | | |

| | | | |
|---|---|---|---|
| **23** | **Completed By:** _____ **on** _____ / _____ / _____ ☐ N/a | | **Weight: 4** |
| | **Attribute:** | Prior to the acceptance of the work, the Contractor furnished a letter from the Manufacturer's Technical Representative certifying that the joint had been installed according to the manufacturer's recommendations. | |
| | **References:** | • New recommended specification | |
| | **Comments:** | | |

# CHAPTER 6: SPECIFICATIONS

## BACKGROUND

It is recommended that before abandoning current design practices for the "latest and greatest" product on the market, verify that the current designs are installed correctly according to specifications. Hold the fabricator and contractor accountable for their products and services and the quality of deck joint assemblies will rise. Give ADOT inspectors the authority to disallow suspect installation methods and the overall quality will improve.

With exception of the following specification recommendations, many of the necessary standards and specifications are in place and only require a rededication to their enforcement. ADOT inspectors need to be aware of information that may seem overwhelming at times. A checklist was recommended to assist the construction inspector during the course of the bridge deck joint installation in Chapter 5: Construction Inspection.

## APPROVED VENDOR PROCEDURES

### Background

During the highway construction boom in Metro Phoenix in the 1980s, many small and inexperienced companies produced products that were outside their area of expertise, namely bridge deck joints. Consequently, many premature failures occurred for various reasons inclusive of poor workmanship, flawed designs theories, poor welding practices, and no accountability.

### Recommendations

The following specification amendments are recommended to ensure that the lessons learned from the past do not occur again.

- Bridge deck joint fabricators should provide documentation on their relevant experience and quality control program. Copies of certifications and a detailed narrative outline of the fabricators' in-place quality control program should be submitted for review and approval by the Engineer.
- Bridge deck joint fabricators should be required to demonstrate a minimum of five consecutive years experience on at least five separate projects in design, fabrication, and installation, and an American Institute of Steel Construction Simple Bridge rating for strip seal and silicone seals. Require ten years experience, ten projects in the design, fabrication, and installation of the more complex modular deck joints and an AISC Major Bridge rating.
- Verify the fabricator's welding certification and ongoing training program satisfies the American Welding Society D1.5 paragraph 1.9 and 5.21, 22, 26, and 27.

- Conduct periodic fabricator shop visits to verify the continuing progress of their quality control program and fabrication processes are in accordance to the approved standards and specifications.

## MEASURING SETTING TEMPERATURE

### Background

ADOT construction personnel expressed confusion and frustration in determining how to measure the setting temperature of the bridge deck joint. Current ADOT Bridge Practice Guidelines suggest, "…the setting temperature of the bridge shall be taken as the mean shade air temperature under the structure…" The initial setting of the bridge deck joint cannot be overemphasized. If the bridge deck joint is set incorrectly, the service life is drastically reduced.

### Recommendation

It is recommended to use a procedure similar to the following to easily and accurately establish the field setting temperature of the bridge deck joint.

At least 48 hours before the deck joint placement, a 1-inch diameter hole shall be drilled to a depth of 1 inch less than the total deck slab thickness. Care must be taken in selecting the location of the temperature hole as to avoid reinforcement, conduits, or stressing strands. The hole should be cleaned of any deleterious material; this may be accomplished by utilizing a pressurized air hose to blow the debris out of the hole. The hole should then be filled flush with potable water. Place a thermometer inside the hole and securely cover; every effort should be taken to insure that the thermometer is centered in the hole.

The first reading should be taken 1 hour after the thermometer is placed. At this time if any evaporation of the water has occurred, it should be filled flush with the top of the deck. Take the second reading at the midpoint of the workday, with the third reading occurring at the end of the workday (add water as necessary). Follow the same procedure when taking readings the next day. The thermometer should remain in the hole at all times during this 48 hour period.

After the final temperature reading is taken, the hole should be prepped for plugging. Remove all water inside the hole. The hole should be plugged with an approved high strength grout.

A minimum of six deck temperature readings should be taken. To determine the average deck temperature, add the values of the readings and then divide the summed value by the total number of readings. The average deck temperature is the temperature value that shall be used in determining the proper joint width at the time of installation.

## STEEL RETAINERS

### Background

One of the most common problems when installing bridge deck joints is properly placing concrete under the angle armor. Voids are often created due to lack of vibration and compaction. When a void is present under the armor angle, it causes the section to carry higher loads than initially designed. In addition, the angle will deflect and vibrate under a live load, which subjects the armor to fatigue problems. Eventually the blockout area begins to spall, joint leakage occurs, and the joint fails, requiring repair or replacement.

### Recommendations

Maintenance districts do not have the resources available to regularly repair and replace bridge deck joints. Therefore, more emphasis on a quality installation should be made during the design and construction to minimize in-service problems. An increase in initial (construction) costs will be greatly made up by the extended life cycle of the bridge deck joint.

Strength Requirements

Require the use of 50 ksi yield strength steel versus 36 ksi yield strength steel for all steel elements. Currently, ADOT deck joint assembly standard drawings allow for retainer rails to be fabricated from A 36 or A 588 steel. This option should be eliminated and usage should be limited to only 50 ksi yield strength steel.

Fatigue Requirements

Enforce specifications that Charpy V-notch impact tests be conducted in accordance with Specification ASTM A 673 and that the proper temperature zone designation required in AASHTO, 17th Edition table 10.3.3.A is used. Specifically for higher elevations in Arizona, the Charpy V-notch impact test should use the temperature zone designation of two.

## BLOCKOUT CONCRETE STRENGTH

### Background

A common mode bridge deck joint failure is the spalling of the blockout area. Proper placement of the concrete and bridge deck joint is essential for a smooth transition from the approach to the structure, or from one span to another. The combination of spalling and high average daily truck traffic counts greatly increases the actual live load impact that is applied to the bridge.

**Recommendation**

It is recommended to use a higher strength with a minimum required 28-day compressive strength of $f'_c$ = 5,000 pounds per square inch (psi).

Design procedures shall conform to the applicable requirements of Section 1006 of the ADOT Standard Specifications for Road & Bridge Construction, except as specified herein. The proposed mix design, its historical test data taken within the last year verifying the mix designs ability to consistently reach 5,000 psi at 28 days, and all details of mixtures proposed for use must be submitted to the engineer for approval within 30 days after award of contract. The engineer, prior to any placement, must approve the mix design.

Making and curing concrete test specimens in the field must be in accordance with ASTM C 31. A minimum of four test cylinders will be taken at the time of placement, to be broken at 7, 14, and 28 days past the date of placement, and the fourth cylinder is to be broken at 56 days, only if the 28-day break is less than the required 28-day compressive strength. If the fourth cylinder does not require testing, it may be discarded. Testing for compressive strength of cylinders shall be in accordance with the requirements of Arizona Test Method 314 and ASTM C 39.

Placing and finishing shall conform to the applicable requirements of Section 401 of ADOT specifications except as specified herein. Concrete shall be placed using methods that result in a minimum of handling and segregation and in a manner that will result in the concrete being distributed uniformly across the deck joint blockout areas. It is important that the entire blockout area be completed within the optimum or specified time; no construction joints will be allowed.

Vibrators shall operate at a minimum of 8,000 impulses per minute. Special care shall be taken to ensure that proper vibration of concrete underneath the joint angle has taken place. Observation that concrete is at least flush or spilling out of the weep holes of the angle will assist in assuring that there are no air voids under the angle.

Sounding the joint angle with a light hammer, listening for areas with air voids, shall also be performed prior to the finishing of the concrete. If any air voids are thought to be heard, additional concrete shall be placed in that area and vibrated to ensure proper distribution of the concrete underneath the joint angle.

## ELASTOMERIC CONCRETE

**Background**

Many departments of transportation, including Arizona's, have indicated poor past performance of elastomeric concrete. Elastomeric concrete headers have consistently failed prematurely when subjected to normal everyday traffic.

**Recommendation**

It is recommended that the allowance of elastomeric concrete to be used in the deck joint blockout area be formally discontinued. As previously recommended, the use of 5 ksi concrete in the blockout area should be implemented.

## COMPRESSION STRENGTH TESTS

### Background

The concrete in the blockout area is critical to the overall success of the bridge deck joint. Once the concrete begins to break down and spall, a progressive deterioration and repair scenario is almost certain to exist. ADOT construction inspectors are concerned that the concrete often used in the blockout area did not meet proper specifications. Currently there is no requirement to perform compression strength tests on the concrete used in the blockout area due to the small volume (less than 100 cubic yards) of the pour.

### Recommendation

It is recommended that the concrete used in the blockout area be tested in accordance with ADOT Standard Specifications for Road and Bridge Construction, Specification 1006-7.02: Sampling and Testing of Concrete.

## LEAK TEST AFTER THE INSTALLATION PROCESS

### Background

As identified in Chapter 2: Surveys, the most reported problem with all of the types of bridge deck joints surveyed was the leaking of runoff water through the joint. Leaking joints lead to other potentially costly problems on the structure. After a leak test, there will be no question as to whether or not the bridge deck joint is watertight.

### Recommendation

It is recommended that before the final acceptance, each bridge deck joint must successfully pass a leak test. The leak test will ensure a watertight seal. In the past if light was not visible through the bridge deck joint, it was considered to be watertight with no proof.

The watertight test is confined to the top of the deck to detect any leakage. The bridge deck joint area from curb to curb, or barrier rail to barrier rail, will be required to hold water. The deck area must be cleared of any debris; a pressurized air hose may be used to blow dust and debris away from this area. Ponding of not less than 1 inch above the roadway surface at all points is necessary. The water used must be potable and free of any impurities. A steady and consistent supply of at least 1 gallon of water per minute to the pond area is required.

Maintain the ponding and flowing water to the ponded area for a period of at least 5 hours. At the conclusion of the test, the underside of the joint is closely examined for leakage. The bridge deck joint will be considered watertight if no obvious wetness or leaks are visible.

If the bridge deck joint leaks, locate the place(s) of leakage and take any repair measures necessary to stop the leakage at no additional cost to ADOT. Use repair measures recommended by the manufacturer and approved by the engineer prior to beginning corrective work.

If measures to eliminate leakage are taken, perform a subsequent water integrity test subject to the same conditions as the original test. Subsequent tests carry the same responsibility as the original test.

## MANUFACTURER INVOLVEMENT

### Background

Proper installation is the ultimate deciding factor that will determine the long-range success of a bridge deck joint. Some contractors recognize the required specialty skills by employing a team of individuals that travel from job to job to install them. In contrast, it is only one of many tasks that a construction inspector must oversee during construction. In addition, the average experience of an ADOT construction inspector is less than 5 years.

### Recommendations

To ensure that the joint is properly installed, it is recommended that at least 14 days before the installation of the joints, the contractor should furnish a complete set of written joint installation instructions to the ADOT project manager.

Prior to the start of construction, all tools, equipment, and techniques used to prepare the joints should be approved by ADOT and the manufacturer's technical representative.

In addition, a manufacturer's technical representative with experience in at least five bridge deck joint installations of similar type (for each type of bridge deck joint system used) should be present during the complete installation of all the bridge deck joints on the structure to provide guidance to the contractor in the proper installation procedures.

Finally, before the acceptance of the work, the contractor should furnish a letter from the manufacturer's technical representative certifying that each bridge deck joint was installed according to the manufacturer's recommendations.

# CHAPTER 7: TRAINING

## BACKGROUND

As previously discussed in Chapter 2: Surveys, a high rate of turnover exists within the ADOT construction inspection and maintenance groups. As a result, mentoring and information transfer inherently suffers. A checklist was recommended to assist the construction inspector during the course of the bridge deck joint installation in Chapter 5: Construction Inspection. The one problem with implementing the checklist is that the construction inspector may not be familiar with the terminology used or fully understand why the checklist attribute is important.

One of the grievances stated by many of the construction inspectors and maintenance personnel in several of the districts was that they lacked proper training in technical areas such as bridges and, more specifically, bridge deck joints.

## CONCLUSION

ADOT personnel need and desire more technical training to assist them in their job duties. However, one of the problems with technical training in such specific areas as bridge deck joints is that newly trained inspectors may not be able to apply their newfound knowledge before they forget it. Some construction inspectors in the rural districts may not work on a bridge project for over two years. As the old saying goes, "Use it or lose it." On the flip side of the equation, supervisors cannot always adequately predict when the special skills will be required in order to schedule the appropriate training course in time.

## RECOMMENDATION

To better accommodate the needs and the often unpredictable schedules of ADOT personnel, the following training course outline may be developed in the standard classroom format or used in an interactive electronic format. The target audience may include anyone (designers, construction inspectors, or maintenance personnel) with limited background or experience in the implementation of bridge deck joints.

It is recognized that each of the two options has pros and cons. Some students require the interaction that exists between participant and instructor to learn, while others prefer to study at their own pace. The biggest advantage of an electronic format, such as an interactive compact disc with video, has over the classroom format is that one person can be trained on a very specific topic (design theory, construction, maintenance, etc.) before the actual application of the information learned.

## IMPLEMENTATION

During the Technical Advisory Meetings of the research phase, it was decided that as a part of this study, a training course would be developed for distribution to construction inspection personnel to assist in the proper installation of bridge deck joints.

A training course will be created detailing the installation of a strip seal deck joint and a deck joint rehabilitation project. The training course will follow the outline as detailed in this chapter (with the actual script available to be included in the final report).

The agreed upon and preferred medium is a video that could be played on a laptop or personal computer. ADOT's video production group will produce the videos.

Planned distribution methods include the video on compact disc and its availability on ADOT's web server. This will provide great flexibility regarding where and when the training could be utilized.

Finally, all personnel associated with this research project (including surveyed ADOT districts and national agencies) will be notified on how to obtain a copy of the training course.

| | | |
|---|---|---|
| **Section - Topic** | | 1 - 1 |
| **Lesson Title** | | Introduction to Bridge Deck Joints |
| **A** | **Learning Objective** | Define the purpose of bridge deck joints |
| | **Solution** | The purpose of bridge deck joints is to allow expansion and contraction of the bridge due to a variety of factors. |
| | **Visual Elements** | Sketch of a bridge displaying direction of bridge expansion and contraction |

| | | |
|---|---|---|
| **B** | **Learning Objective** | List factors that cause a bridge to expand and contract |
| | **Solution** | Factors that may cause a bridge to move:<br>• Temperature changes<br>• Deflection caused by loads<br>• Movement of adjacent earth<br>• Pressures of ice and stream flow<br>• Centrifugal and longitudinal forces of vehicles<br>• Initial and post-construction movements caused by shrinkage of concrete decks<br>• Creep of pre-stressed concrete decks<br>• Cyclic rotation induced by the movement of vehicular traffic<br>• Rotations associated with deck placement and camber growth<br>• Settlement pavement pressure |
| | **Visual Elements** | Photo, sketch, or video of each of the factors that depicts and explains the cause of movement |

| | | |
|---|---|---|
| **C** | **Learning Objective** | List two categories of bridge deck joints and their primary functions |
| | **Solution** | 1. Open Joints:<br>• Permit cyclic and long-term movement<br>• Support traffic<br>• Pass water and debris<br>• Survive service<br>2. Closed Joints:<br>• Permit cyclic and long-term movement<br>• Support traffic<br>• Repel water and debris<br>• Survive service |
| | **Visual Elements** | Photo of each type of deck joint category |

| | | |
|---|---|---|
| **D** | **Learning Objective** | List and discuss advantages and disadvantages of each joint type in each bridge deck joint category |
| | **Solution** | 1. Open Joints:<br>• Formed open joint<br>• Finger plate joint<br>2. Closed Joints:<br>• Poured seal<br>• Compression seal<br>• Cellular seal<br>• Sliding plate<br>• Prefabricated elastomeric seal<br>• Modular elastomeric seal |
| | **Visual Elements** | Photo of each type of deck joint |

| | | |
|---|---|---|
| **Section - Topic** | | 2 - 1 |
| **Lesson Title** | | Construction Inspector Tasks Prior to Concrete Placement |
| **A** | **Learning Objective** | List and be able to discuss tasks to be completed prior to concrete placement |
| | **Solution** | 1. Ensure a copy of the approved shop drawings for the correct type of bridge deck joint assembly (poured seal, strip seal, or modular joint) is on file.<br>2. Ensure approved certificates of compliance for correct type of bridge deck joint assembly (poured seal, strip seal, or modular joint) are on file.<br>3. Ensure the contractor supplied a complete set of written installation instructions to the Project Manager at least 14 days prior to the installation of the bridge deck joint assembly (poured seal, strip seal, or modular joint).<br>4. Ensure the contractor provided manufacturer's technical representative to be on site for the complete installation of the joints, to give advice and instruction to the construction personnel, and to ensure a satisfactory joint installation.<br>5. Verify strip seal was supplied full length without splices (unless otherwise indicated in the project plans).<br>6. Take one sample (18 inches or longer) of the seal material for each type and size of seal used on the project.<br>7. Inspect the blockout areas to ensure that the reinforcing steel was correctly placed for quantity, size, spacing, and clearance.<br>8. Ensure the construction joint surfaces (blockout area) have been in place more than 8 hours and have been cleaned by abrasive blast methods.<br>9. Determine and agree with contractor on the final "e" dimension.<br>10. Determine and agree with contractor on the final setting temperature.<br>11. Verify that prior to the placing the concrete, the blockout surfaces were cleaned of all dust and abrasive material and coated with an approved adhesive.<br>12. Verify that prior to placing concrete, the joint opening was checked and/or adjusted in accordance with the temperature correction chart ("e" value) on the project plans.<br>13. Verify that prior to placing the concrete (and installing the elastomer portion of the assembly), joints openings were covered and protected at all times. |
| | **Visual Elements** | 1. Photo or sketch of each task<br>2. Text for each task reference |

| | | |
|---|---|---|
| **Section - Topic** | | 2 - 2 |
| **Lesson Title** | | Construction Inspector Tasks During Concrete Placement |
| **A** | **Learning Objective** | List and be able to discuss tasks to be completed during concrete placement |
| | **Solution** | 1. Ensure that delivered concrete is in accordance with design drawings.<br>2. Verify that immediately before concrete placement, the formed surfaces are sprinkled with cool water.<br>3. Verify that concrete is placed (hand packed, if necessary) in all voids below and behind the guard angle members.<br>4. Verify that adequate vibration or other consolidation methods are used for the concrete in the joint, with special emphasis on the area under the angle iron.<br>5. Verify that concrete is inspected for voids by sounding the guard angle with a hammer (according to project plans).<br>6. To ensure a smooth finished joint, verify the top elevation of the angle iron was checked longitudinally and transversely with a straight edge.<br>7. Take concrete cylinder samples for compression tests as require by specifications. |
| | **Visual Elements** | 1. Photo or sketch of each task<br>2. Text for each task reference |

| | | |
|---|---|---|
| **Section - Topic** | | 2 - 3 |
| **Lesson Title** | | Construction Inspector Tasks After Concrete Placement |
| **A** | **Learning Objective** | List and be able to discuss tasks to be completed after concrete placement |
| | **Solution** | 1. Verify that after installation, the deck joint seal element was checked for perforations or tearing (if found, will be cause for rejection of the seal).<br>2. Verify that after the initial concrete set, the bolts holding the joint together were loosened or removed to allow for movement.<br>3. After installation, verify that the deck joint seal element was checked for perforations or tearing by performing a leakage test (if found, will be cause for rejection of the seal).<br>4. Obtain (prior to the acceptance of the work) a letter from the manufacturer's technical representative certifying that the joint has been installed according to the manufacturer's recommendations. |
| | **Visual Elements** | 1. Photo or sketch of each task<br>2. Text for each task reference |

Please note that if the recommendations made in Chapter 4: Design Details, are used; an additional training section can be created for ADOT maintenance personnel covering:

- The overlaying of bridge decks and bridge deck joints.
- The installation and repair of poured silicone sealant bridge deck joints.
- The installation and repair of the neoprene gland in strip seal bridge deck joints.

# APPENDIX A: ADOT SURVEY

*Arizona Department of Transportation*
*Arizona Transportation Research Center*
*Bridge Deck Joints*

## Interview Background

1. Interviewer
2. Date of interview
3. Location of interview
4. Interviewer

## Person(s) being Interviewed

1. Organization Represented
2. Mailing Address
3. Name
4. Title
5. Telephone (voice)
6. Telephone(fax)
7. Email

8/21/2003 (10:27 AM) Page 1 of 1

## Design

1. What are your standard reference drawings for deck joints?

2. What were your standards prior to the current ones?

3. What are your standard specifications?

4. Have you allowed deviations from the standards?
    - What are your procedures for this?
    - Specific projects:
    - Have designers/engineers suggested this
    - Have manufacturers suggested this

5. What part(s), if any, of the standards are most important to you in ensuring life of the joint

6. What part(s) of the standards are specifically important and unique for your region of application?

7. How do you select which type or brand of joint to use?

8. What type of joints do you have the best / worst success list?

9. What is the maximum length of span that you do not use a deck joint?

10. What part(s), if any, of the standards are most difficult for suppliers to meet

11. What part(s), if any, of the standards would you like changed

12. Can you place any priorities on the specifications – a rank order of the spec provisions which are most important for you in ensuring quality joints for your region?

13. What engineering evaluations/calculations are required to provide assurance that deck joints specified as a result of the calculations will meet your regional needs?

14. Do you have an example of engineering calculations which correctly address the areas of interest for joints with particular emphasis on problems unique to your applications? How well did it perform?

15. Do you have an example of engineering calculations which did not address the areas of interest for joints with particular emphasis on problems unique to your applications? How well did it perform?

## Construction

1. Do you require construction/installation specifications for deck joints?
2. What is your procedure for review of construction/installation specifications, if any?
3. Can you place any priorities on joint installation requirements– a rank order of the requirements which are most important for you in ensuring quality joints for your region?
4. What do you look for in a manufacturer/supplier to ensure quality construction?
5. Do you typically have the supplier make recommendations for installation for specific projects to the constructor – if so, how is this incorporated into contracting requirements?
6. Typically, is there an engineering review of construction/installation requirements for deck joints? If so, what are your instructions for the review?
7. In your experience, can you rank the most important items for construction/installation for your region that are required to ensure life of the joint.
8. What part of construction/installation do contractors resist or suggest alternatives?
9. Give a specific instance where construction/installation led to a superior bridge deck joint.
10. Give a specific instance where construction/installation led to an inferior bridge deck joint.
11. What is your acceptance procedure for an installed deck joint?

## Maintenance

1. How often are deck joints inspected in your region?

2. Do you have specific inspection requirements, especially those that may be unique to your region?

3. For each joint problem, estimate percentage of joints that experience problem. And if applicable, provide time and cost estimate to repair/replace.

| | |
|---|---|
| ____ Over extension | ____ Improper installation |
| ____ Cold temperature | ____ Anchorage failure of armor |
| ____ Hot temperature | ____ Edge spalling |
| ____ Leaking | ____ Inadequate design |
| ____ Squeezing out / extrusion | ____ Manufacturing problems |
| ____ Sunlight | ____ No maintenance |
| ____ Traffic | ____ Gaps too large |
| ____ Debris | ____ Hold down bolts fail |
| | ____ Fingers break |

4. Do you have any specific factors in your region that you could cite that lead to excessive deterioration of deck joints when compared to other regions?

5. Are there specific types of bridges that require joint replacement more than other types?

6. Regardless of type of bridge, are there major discrepancies between intervals of joint replacement of joints in primary vs. secondary roads.

7. Give specific instances of deck joint replacement projects in your region with the major contributing cause for replacement

8. In the instances cited in #5 above, what was the interval between installation and replacement?

9. How much did the replacement project cost?

10. How long did the replacement project take to get funded?

11. How long did the replacement project take to get bid and started?

12. How long did the replacement project take to complete after bid?

13. How long was traffic diverted? What measures were taken?

14. In your experience, what is the factor of deck joint replacement cost to original installation cost?

15. Where there changes made in the replacement that was not in the original design? What were they and why?

## Overall

1. What features of deck joints are most troublesome in your region?
2. What would you like to see in future joint design?
3. What suggestions do you have for replacement projects?

# APPENDIX B: NATIONAL SURVEY

Arizona Department of Transportation
Intermodal Transportation Division
Arizona Transportation Research Center

## "Evaluation of Various Types of Bridge Deck Joints"

### National Agency Survey

1. Please complete the questionnaire for each joint type with your best estimate of information.

2. Please enclose a copy of the pertinent sheets of the following documents for each bridge deck joint type:

   a. Past and current Bridge deck joint design practice guidelines
   b. Past and current bridge deck joint standards
   c. Past and current Bridge deck joint construction specifications
   d. Copy of any related agency studies on bridge deck joints

**OR**

Provide web address to your agency's bridge group website that contains the above documents

www. _____

| | |
|---|---|
| Agency: | |
| Agency **bridge** (excluding culverts) inventory total: | |

| | | | | | |
|---|---|---|---|---|---|
| Name: | | | | | |
| Address: | | | | | |
| City: | | State: | | Zip: | |
| Phone: | | | | | |
| Fax: | | | | | |
| E-mail: | | | | | |

| | | POURED SEALS | COMPRESSION SEALS | STRIP SEALS | FINGER / SLIDING PLATE JOINTS | MODULAR JOINT | INTEGRAL ABUTMENT | OTHER _____ |
|---|---|---|---|---|---|---|---|---|
| 1. | **Total currently in service. (quantity or % of bridge inventory)** | | | | | | | |
| 2. | **Total installed annually. (quantity or % of new bridge inventory)** | | | | | | | |
| 3. | **Does your agency presently allow usage of this joint type?** | YES NO | YES NO | YES NO | YES NO | YES NO | YES NO | YES NO |
| 4. | **Has your agency previously allowed usage of this joint type but discontinued?** | YES NO | YES NO | YES NO | YES NO | YES NO | YES NO | YES NO |
| 5. | **Expected service life (years)** | _____ Years | _____ Years | _____ Years | _____ Years | _____ Years | _____ Years | _____ Years |
| 6. | **Has your agency experienced any early failures with this type of joint? Explain. (Use additional sheets as necessary)** | | | | | | | |
| 7. | **List manufacturers / suppliers of joint type** | _____<br>_____<br>_____<br>_____ | _____<br>_____<br>_____<br>_____ | _____<br>_____<br>_____<br>_____ | _____<br>_____<br>_____<br>_____ | _____<br>_____<br>_____<br>_____ | Not applicable | _____<br>_____<br>_____<br>_____ |
| 8. | **List any manufacturers or proprietary products that your agency will not permit.** | _____<br>_____<br>_____ | _____<br>_____<br>_____ | _____<br>_____<br>_____ | _____<br>_____<br>_____ | _____<br>_____<br>_____ | Not applicable | _____<br>_____<br>_____ |
| 9. | **Rate each joint issue on the following scale:**<br><br>**1 – Major problem**<br><br>**2 – Minor problem**<br><br>**3 – No problem** | ___ Over extension<br>___ Cold temperature<br>___ Hot temperature<br>___ Leaking<br>___ Squeezing out / extrusion<br>___ Sunlight<br>___ Traffic<br>___ Debris<br>___ Improper installation<br>___ Inadequate design<br>___ Manufacturing problems<br>___ Inadequate maintenance<br>___ Inadequate repair | ___ Over extension<br>___ Cold temperature<br>___ Hot temperature<br>___ Leaking<br>___ Squeezing out / extrusion<br>___ Sunlight<br>___ Traffic<br>___ Debris<br>___ Improper installation<br>___ Anchorage failure of armor<br>___ Edge spalling<br>___ Inadequate design<br>___ Manufacturing problems<br>___ Inadequate maintenance<br>___ Inadequate repair | ___ Over extension<br>___ Cold temperature<br>___ Hot temperature<br>___ Leaking<br>___ Sunlight<br>___ Traffic<br>___ Debris<br>___ Improper installation<br>___ Anchorage failure of armor<br>___ Inadequate design<br>___ Manufacturing problems<br>___ Inadequate maintenance<br>___ Inadequate repair | ___ Gaps too large<br>___ Hold down bolts fail<br>___ Fingers break<br>___ Debris<br>___ Improper installation<br>___ Anchorage failure<br>___ Inadequate design<br>___ Manufacturing problems<br>___ Inadequate maintenance<br>___ Inadequate repair | ___ Over extended<br>___ Uneven gaps<br>___ Seal pullout<br>___ Bearings/springs fall out<br>___ Fatigue cracking<br>___ Debris<br>___ Improper installation<br>___ Inadequate design<br>___ Anchorage failure<br>___ Manufacturing problems<br>___ Inadequate maintenance<br>___ Inadequate repair | ___ Approach heaving<br>___ Approach cracking<br>___ Deck cracking<br>___ Superstructure cracking<br>___ Inadequate design<br>___ Inadequate maintenance<br>___ Inadequate repair | ___ Over extension<br>___ Cold temperature<br>___ Hot temperature<br>___ Leaking<br>___ Squeezing out / extrusion<br>___ Sunlight<br>___ Traffic<br>___ Debris<br>___ Improper installation<br>___ Anchorage failure of armor<br>___ Edge spalling<br>___ Inadequate design<br>___ Manufacturing problems<br>___ Inadequate maintenance<br>___ Inadequate repair |
| 10. | **How often does maintenance clean or flush debris from joint or joint trough?** | _____ Months | _____ Months | _____ Months | _____ Months | _____ Months | Not applicable | _____ Months |
| 11. | **List typical maintenance activities and their frequency associated with this type of joint. (Use additional sheets as necessary)** | _____<br>_____<br>_____ | _____<br>_____<br>_____ | _____<br>_____<br>_____ | _____<br>_____<br>_____ | _____<br>_____<br>_____ | _____<br>_____<br>_____ | _____<br>_____<br>_____ |
| 12. | **List any references to books, articles or reports relevant to this type of joint. (Use additional sheets as necessary)** | _____<br>_____<br>_____ | _____<br>_____<br>_____ | _____<br>_____<br>_____ | _____<br>_____<br>_____ | _____<br>_____<br>_____ | _____<br>_____<br>_____ | _____<br>_____<br>_____ |
| 13. | **Has your agency recently conducted a study related to this type of deck joint?** | YES NO | YES NO | YES NO | YES NO | YES NO | YES NO | YES NO |

**Please return the survey and requested documents in the supplied self addressed postage paid envelope and mail to:**

John Misik, P.E.
Michael Baker Jr., Inc.
1313 E Osborn Rd, Suite 150
Phoenix, AZ 85014

# Thank You!

## About the Arizona Transportation Research Center

The Arizona Department of Transportation (ADOT) conducts research to improve all aspects of transportation in Arizona. Specific goals include evaluation of new materials and methods, development of design and analysis techniques, and study of underlying causes of transportation problems.

The Department's research effort is administered by the Arizona Transportation Research Center (ATRC), which has immediate responsibility for the management and conduct of research. A Research Council comprised of leading operations personnel from a wide spectrum representing the diverse interests of the various sections of ADOT, provides technical oversight of the research program. To ensure that research is responsive to the Department's needs a Steering Committee provides policy guidance for the overall research effort.

## Publications of the Arizona Transportation Research Center

The Arizona Transportation Research Center shares the results of its research through its own reports and Research Notes. To raise awareness of research done elsewhere, the Center also distributes the Transportation Research Digest, which has summaries of selected recent reports. These publications are widely distributed to other transportation research centers and transportation officials in Arizona and other states. For additional information or to look at recent reports, check out the sites below.

http://www.dot.state.az.us/ABOUT/atrc/Publications/SPR/SPR_Reports.htm
http://www.dot.state.az.us/ABOUT/atrc/Publications/ResNotes/Research_Notes.htm
http://www.dot.state.az.us/ABOUT/atrc/Publications/DocRev/index.htm

# APPENDIX C: AGENCY SURVEY RESPONSE LIST

| | | POURED SEALS | COMPRESSION SEALS | STRIP SEALS | FINGER / SLIDING PLATE JOINTS | MODULAR JOINT | INTEGRAL ABUTMENT | OTHER _____ |
|---|---|---|---|---|---|---|---|---|
| 1. | **Total currently in service. (quantity or % of bridge inventory)** | | | | | | | |
| 2. | **Total installed annually. (quantity or % of new bridge inventory)** | | | | | | | |
| 3. | **Does your agency presently allow usage of this joint type?** | YES NO | YES NO | YES NO | YES NO | YES NO | YES NO | YES NO |
| 4. | **Has your agency previously allowed usage of this joint type but discontinued?** | YES NO | YES NO | YES NO | YES NO | YES NO | YES NO | YES NO |
| 5. | **Expected service life (years)** | _____ Years | _____ Years | _____ Years | _____ Years | _____ Years | _____ Years | _____ Years |
| 6. | **Has your agency experienced any early failures with this type of joint? Explain. (Use additional sheets as necessary)** | | | | | | | |
| 7. | **List manufacturers / suppliers of joint type** | _____<br>_____<br>_____<br>_____ | _____<br>_____<br>_____<br>_____ | _____<br>_____<br>_____<br>_____ | _____<br>_____<br>_____<br>_____ | _____<br>_____<br>_____<br>_____ | Not applicable | _____<br>_____<br>_____<br>_____ |
| 8. | **List any manufacturers or proprietary products that your agency will not permit.** | _____<br>_____<br>_____ | _____<br>_____<br>_____ | _____<br>_____<br>_____ | _____<br>_____<br>_____ | _____<br>_____<br>_____ | Not applicable | _____<br>_____<br>_____ |
| 9. | **Rate each joint issue on the following scale:**<br>**1 – Major problem**<br>**2 – Minor problem**<br>**3 – No problem** | ___ Over extension<br>___ Cold temperature<br>___ Hot temperature<br>___ Leaking<br>___ Squeezing out / extrusion<br>___ Sunlight<br>___ Traffic<br>___ Debris<br>___ Improper installation<br>___ Inadequate design<br>___ Manufacturing problems<br>___ Inadequate maintenance<br>___ Inadequate repair | ___ Over extension<br>___ Cold temperature<br>___ Hot temperature<br>___ Leaking<br>___ Squeezing out / extrusion<br>___ Sunlight<br>___ Traffic<br>___ Debris<br>___ Improper installation<br>___ Anchorage failure of armor<br>___ Edge spalling<br>___ Inadequate design<br>___ Manufacturing problems<br>___ Inadequate maintenance<br>___ Inadequate repair | ___ Over extension<br>___ Cold temperature<br>___ Hot temperature<br>___ Leaking<br>___ Sunlight<br>___ Traffic<br>___ Debris<br>___ Improper installation<br>___ Anchorage failure of armor<br>___ Inadequate design<br>___ Manufacturing problems<br>___ Inadequate maintenance<br>___ Inadequate repair | ___ Gaps too large<br>___ Hold down bolts fail<br>___ Fingers break<br>___ Debris<br>___ Improper installation<br>___ Anchorage failure<br>___ Inadequate design<br>___ Manufacturing problems<br>___ Inadequate maintenance<br>___ Inadequate repair | ___ Over extended<br>___ Uneven gaps<br>___ Seal pullout<br>___ Bearings/springs fall out<br>___ Fatigue cracking<br>___ Debris<br>___ Improper installation<br>___ Inadequate design<br>___ Anchorage failure<br>___ Manufacturing problems<br>___ Inadequate maintenance<br>___ Inadequate repair | ___ Approach heaving<br>___ Approach cracking<br>___ Deck cracking<br>___ Superstructure cracking<br>___ Inadequate design<br>___ Inadequate maintenance<br>___ Inadequate repair | ___ Over extension<br>___ Cold temperature<br>___ Hot temperature<br>___ Leaking<br>___ Squeezing out / extrusion<br>___ Sunlight<br>___ Traffic<br>___ Debris<br>___ Improper installation<br>___ Anchorage failure of armor<br>___ Edge spalling<br>___ Inadequate design<br>___ Manufacturing problems<br>___ Inadequate maintenance<br>___ Inadequate repair |
| 10. | **How often does maintenance clean or flush debris from joint or joint trough?** | _____ Months | _____ Months | _____ Months | _____ Months | _____ Months | Not applicable | _____ Months |
| 11. | **List typical maintenance activities and their frequency associated with this type of joint. (Use additional sheets as necessary)** | _____<br>_____<br>_____ | _____<br>_____<br>_____ | _____<br>_____<br>_____ | _____<br>_____<br>_____ | _____<br>_____<br>_____ | _____<br>_____<br>_____ | _____<br>_____<br>_____ |
| 12. | **List any references to books, articles or reports relevant to this type of joint. (Use additional sheets as necessary)** | _____<br>_____<br>_____ | _____<br>_____<br>_____ | _____<br>_____<br>_____ | _____<br>_____<br>_____ | _____<br>_____<br>_____ | _____<br>_____<br>_____ | _____<br>_____<br>_____ |
| 13. | **Has your agency recently conducted a study related to this type of deck joint?** | YES NO | YES NO | YES NO | YES NO | YES NO | YES NO | YES NO |

| | Agency | Location |
|---|---|---|
| 1 | Alberta Transportation | Edmonton, Canada |
| 2 | Saskatchewan Highway & Transportation | Regina, Canada |
| 3 | Arkansas Highway & Transportation Department | Little Rock, AR |
| 4 | Caltrans | Sacramento, CA |
| 5 | Colorado Department of Transportation | Denver, CO |
| 6 | Connecticut DOT | Newington, CT |
| 7 | Hawaii DOT | Kapolei, HI |
| 8 | Iowa DOT | Ames, IA |
| 9 | Idaho Transportation Department | Boise, ID |
| 10 | IDOT-Bureau of Bridges & Structures | Springfield, IL |
| 11 | Kentucky | Frankfort, KY |
| 12 | LA DOT & Development | Baton Rouge, LA |
| 13 | Massachusetts Highway Department | Boston, MA |
| 14 | HNTB Corporation | Boston, MA |
| 15 | Minnesota DOT | Oakdale, MN |
| 16 | Montana DOT | Helena, MT |
| 17 | Structure Design Unit-NCDOT | Raleigh, NC |
| 18 | New Hampshire DOT | Concord, NH |
| 19 | New Jersey DOT | Trenton, NJ |
| 20 | New Mexico State Highway & Transportation Dept | Santa Fe, NM |
| 21 | MTA Bridges & Tunnels | New York, NY |
| 22 | The Ohio Turnpike Commission | BEREA, OH |
| 23 | Oklahoma DOT | Oklahoma City, OK |
| 24 | Pennsylvania DOT | Harrisburg, PA |
| 25 | Rhode Island DOT | Providence, RI |
| 26 | Tennessee DOT | Nashville, TN |
| 27 | Virginia DOT | Richmond, VA |
| 28 | Washington State DOT | Olympia, WA |

# APPENDIX D: ORIGINAL CHECKLIST

ARIZONA DEPARTMENT OF TRANSPORTATION - INTERMODAL DIVISION

***Construction Inspection Checklist***

**Structures-Division VI Bridge Deck Joint**

| | | | |
|---|---|---|---|
| **TRACS Number:** | | **Version:** | **060503** |
| **Reviewer:** | | **Subcontractor:** | |
| **Author:** | **Shawn Farahzadi** | **Location Beg/End Sta** | |
| **Structure Name & #:** | | **Joint Type & Manuf:** | |

| Weight | Attributes |
|---|---|
| Y☐N☐NA☐ | **1. Correct type of joint (compression seal or strip seal) is installed? [Project Plans, approved Shop Drawings, 601-3.04 (B)(2) and 1011-5]** |
| **2** | Comments: |
| Y☐N☐NA☐ | **2. Approved certificates of compliance are on file for bridge deck joint assemblies? [1011-3, 4, and 5]** |
| **2** | Comments: |
| Y☐N☐NA☐ | **3. Inspector has a copy of the approved Shop Drawings for the correct type of assembly: compression seal or strip seal? [601-3.04 (B)(3)(b)]** |
| **2** | Comments: |
| Y☐N☐NA☐ | **4. Prior to placing the concrete, the joint opening was checked and/or adjusted in accordance with the temperature correction chart? [601-3.04 (B) and Project Plans]** |
| **4** | Comments: |
| Y☐N☐NA☐ | **5. Contractor and ADOT agree on the final "e" dimension?** |
| **4** | Comments: |
| Y☐N☐NA☐ | **6. Construction joint surfaces, in place more than eight hours, are cleaned by abrasive blast methods? [601-3.04A]** |
| **2** | Comments: |
| Y☐N☐NA☐ | **7. One sample (18 inches or longer) of the seal material was taken for each size of seal used on the project? [601-3.04 (B)(3)(a) and 1011-5]** |
| **2** | Comments: |
| Y☐N☐NA☐ | **8. Prior to installing the Elastomer portion of the assembly, joints-to-be-sealed are covered and protected at all times? [601-3.04 (B)(3)(g)]** |
| **4** | Comments: |
| Y☐N☒NA☐ | **9. After installation, the deck joint seal element was checked for perforations or tearing (if found, will be cause for rejection of the seal)? [601-3.04 (B)(3)(g)]** |

Bridge Deck Joint_c 1 of 3 pages

| | |
|---|---|
| **4** | Comments: |
| Y☐N☐NA☐ | **10. For the block out area, reinforcing steel was checked for quantity, size, spacing, clearance, and correct placement? [Project Plans & Shop Drawings]** |
| **4** | Comments: |
| Y☐N☐NA☐ | **11. Prior to placing the concrete, the block out surfaces were cleaned of all dust and abrasive material and coated with an approved adhesive? [601-3.04 (B)(3)(g)]** |
| **2** | Comments: |
| Y☐N☐NA☐ | **12. Immediately prior to concrete placement, the formed surfaces are sprinkled with cool water? [1006-5.02]** |
| **2** | Comments: |
| Y☐N☐NA☐ | **13.** |
| **4** | Comments: |
| Y☐N☐NA☐ | **14. Concrete is placed in all voids below and behind the guard angle members?** |
| **2** | Comments: |
| Y☐N☐NA☐ | **15. Adequate vibration or other consolidation methods are used for the concrete in the joint with special emphasis on the area under the angle iron? [Constr. Manual 601-3.03 (D)]** |
| **4** | Comments: |
| Y☐N☐NA☐ | **16. Strip (Neoprene) seal was supplied full length without splices unless otherwise indicated in the Project Plans? [Bridge Group Structure Detail Standard Drawings 3.02]** |
| **4** | Comments: |
| Y☐N☐NA☐ | **17. Compression (polychloroprene) joint was supplied full length without splices, for lengths of 60 feet or less, unless otherwise indicated on the Project Plans? [Bridge Group Structure Detail Standard Drawings 3.01]** |
| **4** | Comments: |
| Y☐N☐NA☐ | **18. To ensure a smooth finished joint, the top elevation of the angle iron was checked longitudinally and transversely with a straight-edge? [601-3.05D]** |
| **4** | Comments: |
| Y☐N☐NA☐ | **19. Joint is inspected for voids by sounding the guard angle with a hammer according to Project Plans?** |
| **4** | Comments: |
| Y☐N☐NA☐ | **20. After the initial concrete set, bolts holding the joint together were loosened or removed to allow for movement? [Bridge Group Structure Detail Standard Drawings 3.01]** |
| **4** | Comments: |
| Y☐N☐NA☐ | **21. Compression joint seals are placed within -1/4" to +3/8" flush with the guard angle as indicated on the Project Plans? [Bridge Group Structure Detail Standard Drawings 3.01]** |

| | |
|---|---|
| **2** | Comments: |
| Y☐N☐NA☐ | **22. Other:** |
| **0** | Comments: |
| | |

| | |
|---|---|
| Attribute Parity | |
| Number of non-conforming attributes | |
| Percent Conformance=(Sum yes's/Sum yes's+Sum no's)*100<br>Calculate ☐ | |

# APPENDIX E: ALTERNATE ANCHOR DETAILS

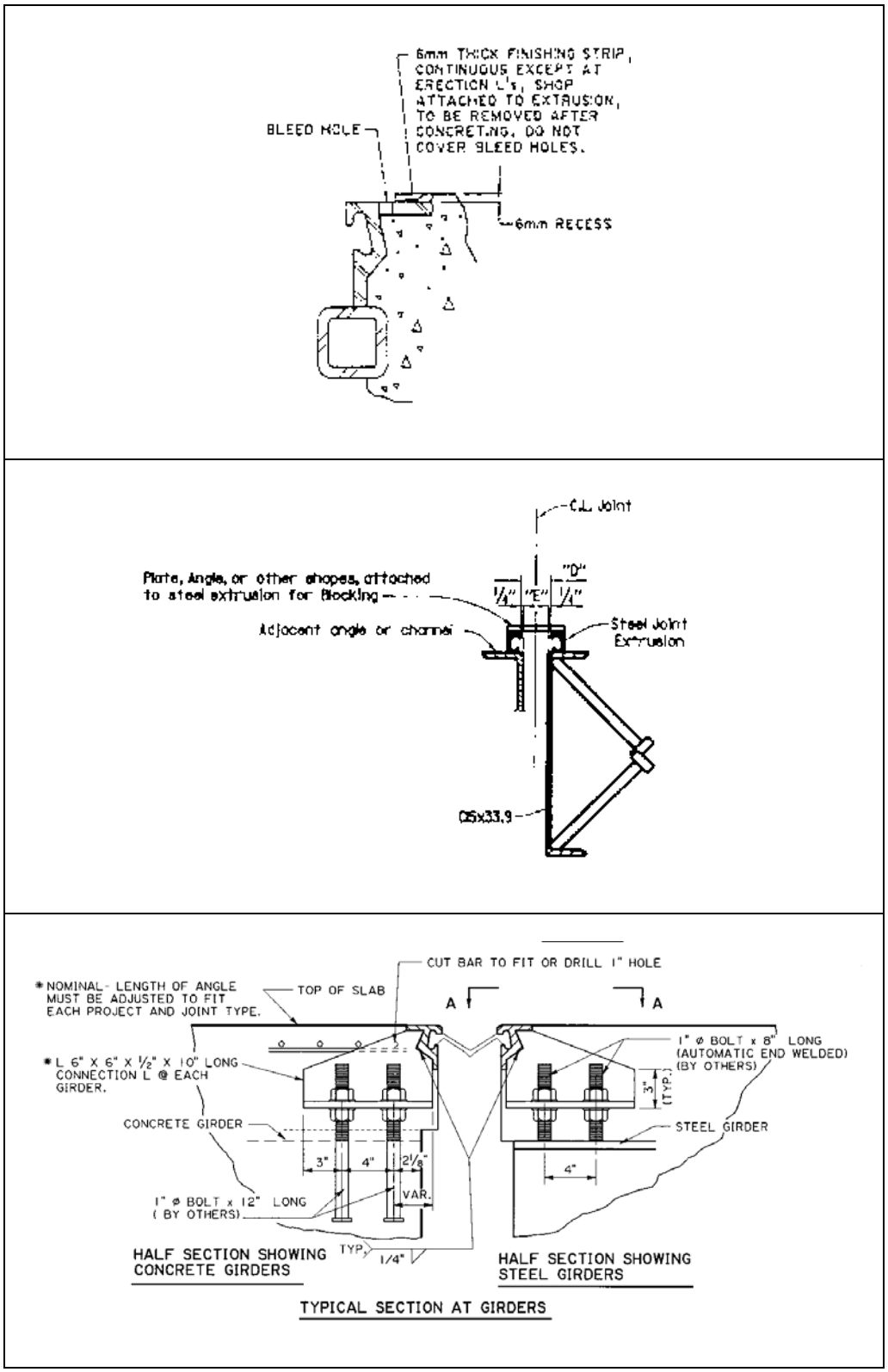

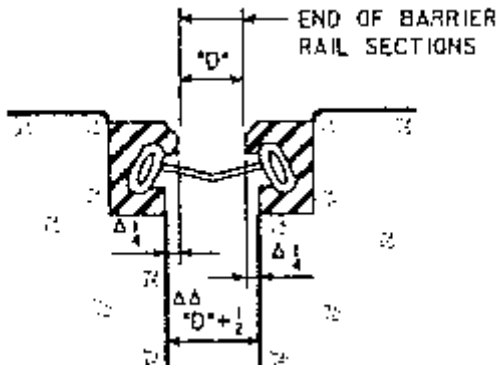
END OF BARRIER
RAIL SECTIONS
"D"
"D"+½

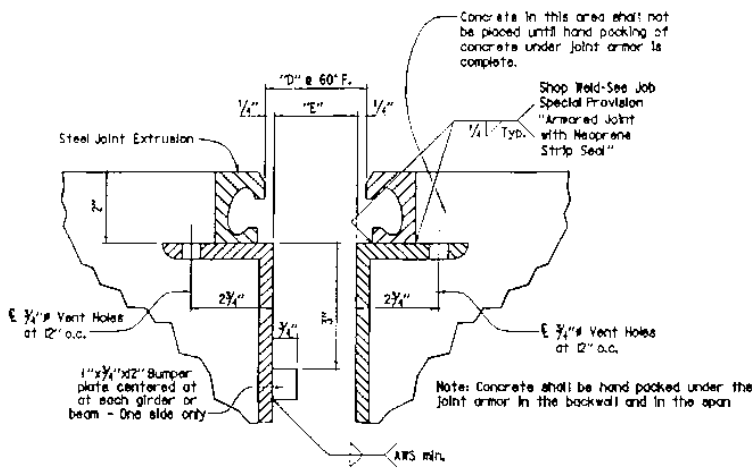
Concrete in this area shall not be placed until hand packing of concrete under joint armor is complete.
"D" @ 60°F.
¼"
"E"
¼"
Shop Weld-See Job Special Provision "Armored Joint with Neoprene Strip Seal"
¼ Typ.
Steel Joint Extrusion
2¾"
2¾"
℄ ¾"ø Vent Holes at 12" o.c.
¾"
℄ ¾"ø Vent Holes at 12" o.c.
1"x¾"x12" Bumper plate centered at at each girder or beam - One side only
Note: Concrete shall be hand packed under the joint armor in the backwall and in the span
AWS min.

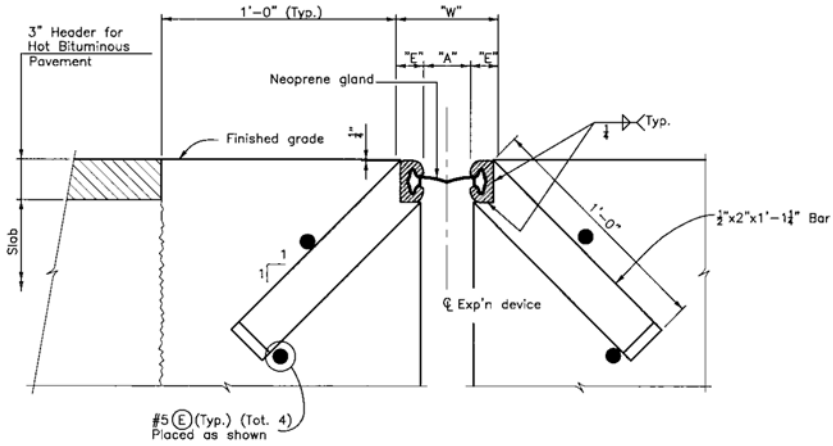
1'-0" (Typ.)
"W"
3" Header for Hot Bituminous Pavement
"E" "A" "E"
Neoprene gland
Finished grade
Typ.
1'-0"
½"x2"x1'-1¼" Bar
Slab
1
1
℄ Exp'n device
#5 Ⓔ (Typ.) (Tot. 4) Placed as shown

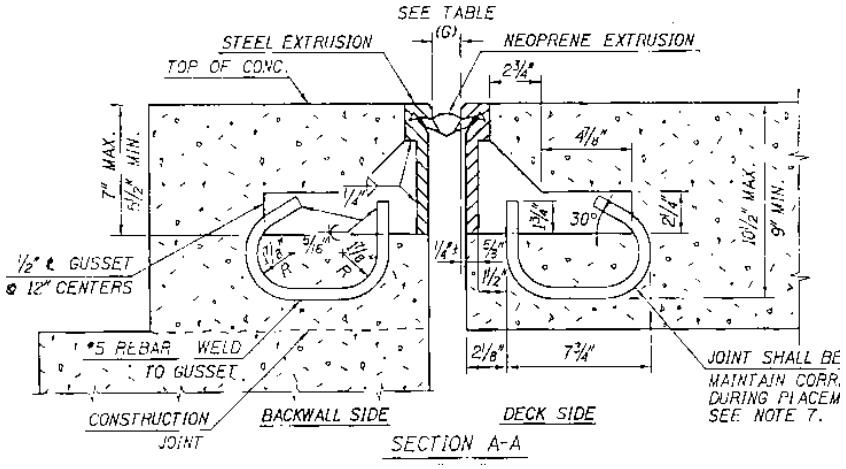
SEE TABLE
(G)
STEEL EXTRUSION
NEOPRENE EXTRUSION
TOP OF CONC.
2 3/4"
4 7/8"
7" MAX.
5 1/2" MIN.
1/4"
30°
2 1/4"
10 1/2" MAX.
9" MIN.
1/2" ℄ GUSSET
@ 12" CENTERS
#5 REBAR
WELD
TO GUSSET.
2 1/8"
7 3/4"
JOINT SHALL BE
MAINTAIN CORR.
DURING PLACEM
SEE NOTE 7.
CONSTRUCTION
JOINT
BACKWALL SIDE
DECK SIDE
SECTION A-A

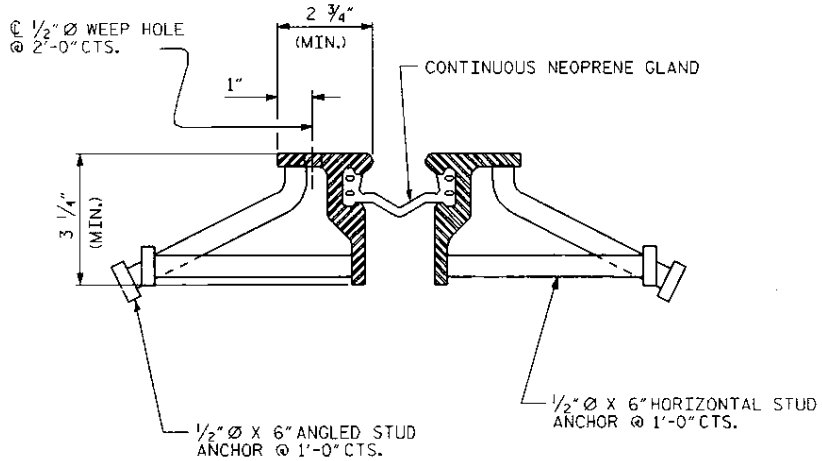
℄ 1/2" Ø WEEP HOLE
@ 2'-0" CTS.
2 3/4"
(MIN.)
1"
CONTINUOUS NEOPRENE GLAND
3 1/4"
(MIN.)
1/2" Ø X 6" ANGLED STUD
ANCHOR @ 1'-0" CTS.
1/2" Ø X 6" HORIZONTAL STUD
ANCHOR @ 1'-0" CTS.

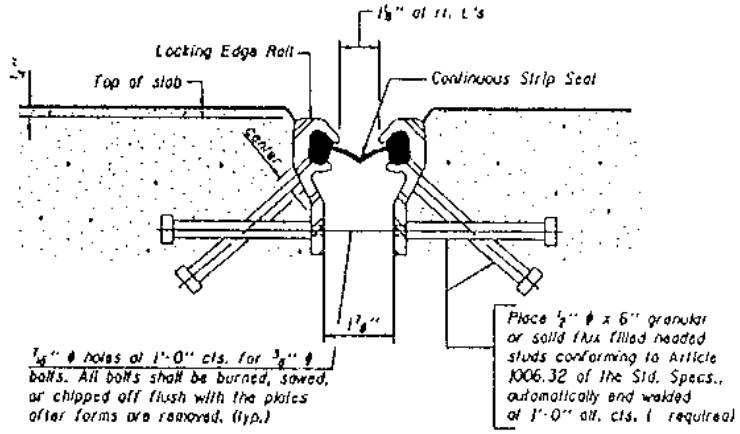
Locking Edge Roll
Top of slab
Continuous Strip Seal
Center
1 7/8"
Place 1/2" ϕ x 6" granular or solid flux filled headed studs conforming to Article 1006.32 of the Std. Specs., automatically end welded at 1'-0" all. cts. ( required)
7/8" ϕ holes at 1'-0" cts. for 3/8" ϕ bolts. All bolts shall be burned, sawed, or chipped off flush with the plates after forms are removed. (typ.)

# BIBLIOGRAPHY


1. Burke, Martin P. "Bridge Deck Joints." NCHRP Report 141, Transportation Research Board, Washington, DC, 1989.

2. Dexter, R.J., Connor, R.J., Kaczinski, M.R. "Fatigue Design of Modular Expansion Joints." NCHRP Report 402, Transportation Research Board, Washington, DC, 1997.

3. Roeder, Charles W., Moorty, Shashi. "Thermal Movements in Bridges." NCHRP Report 1290, Transportation Research Board, Washington, DC (1991).

4. American Association of State Highway and Transportation Officials (AASHTO), "Standard Specifications for Highway Bridges," American Association of State Highway and Transportation Officials, Washington, DC, 17th Edition 2002.

5. Arizona Department of Transportation, "Standard Specifications for Highway Bridges," Arizona Department of Transportation, Phoenix, AZ, 2000.

6. ASTM, "Standards in Building Codes," ASTM, Philadelphia, PA, 22nd Edition Volumes 1 and 2, 1985.

7. The DS Brown Company. Strip Seal Expansion Joint Systems. North Baltimore, Ohio: The DS Brown Company, 2002.

8. Watson Bowman Acme Corporation. Wabo Strip Seal Specification. Amherst, New York: Watson Bowman Acme Corporation, 2001.

9. Watson Bowman Acme Corporation. Wabo Strip Seal Installation. Amherst, New York: Watson Bowman Acme Corporation, 2001.

10. Dahir, Sabir H., Mellott, Dale B. "Bridge Deck Expansion Joints." Transportation Research Record 1118, 1987.

11. American Concrete Institute (ACI), "Prediction of Creep, Shrinkage, and Temperature Effects in Concrete Structures," ACI 209-98, ACI Committee 209, Detroit, MI, 1998.

12. American Association of State Highway and Transportation Officials (AASHTO), AASHTO LRFD Bridge Design Specifications. First Edition, Washington, DC, 1994.

13. American Institute of Steel Construction Inc (AISC). "Load & Resistance Factor Design." Manual of Steel Construction V.1. Second Edition 1995.

14. Oesterle, Ralph G., et al. "Jointless and Integral Abutment Bridges Summary Report – Draft Final Report." Construction Technology Laboratories, Inc. Skokie, Illinois, 1999.

15. Roeder, Charles W., Moorty, Shashi. "Thermal Movements in Bridges." Transportation Research Record 1290, 1991.

16. Blodgett, Omer W., Design of Welded Structures Fifteenth Printing: The James F. Lincoln Arc Welding Foundation, 1996.

17. AISC, Manual of Steel Construction, American Institute for Steel Construction, Chicago, IL, 1994.

18. AWS, Structural Welding Code, American Welding Society, Miami, FL, 1988.

19. Timoshenko, S.P., Goodier, J.N., Theory of Elasticity, Third Edition, McGraw-Hill, New York, 1970.

20. American Institute of Steel Construction Inc (AISC). "Moments, Shears, and Reactions for Continuous Bridges." American Institute of Steel Construction, Chicago, IL, 1986.

21. ASTM. "Standard Specifications for Carbon and High-Strength Low-Alloy Structural Steel Shapes, Plates, and Bars and Quenched-and-Tempered Alloy Structural Steel Plates for Bridges," Annual Book of ASTM Standards, Volume 01.04, American Society for Testing and Materials, Philadelphia, PA.

22. American Concrete Institute (ACI), "Considerations for Design of Concrete Structures Subjected to Fatigue Loading," ACI 215R-74 (Revised 1992), ACI Committee 215, Detroit, MI, 1992.

23. Zokair, T.L., Osterkamp, T.A., Imbsen, R.A. "Distribution of Wheel Loads on Highway Bridges, Final Report Project 12-26/1," National Cooperative Highway Research Program, Transportation Research Board, National Research Council, Washington, DC, 1991.

24. Bolluyt, J.E., Kau, V.B., Greimann, L.F. " Performance of Strip Seals in Iowa Bridges, Pilot Study," Iowa Department of Transportation and the Iowa Highway Research Board, Project TR-437.

25. Ramirez, T.L. "Pavetech Bridge Joint System Evaluation, Construction Report," Pennsylvania Department of Transportation, Project 90-53, 1990.

26. Ramirez, T.L. "Asphaltic Plug-Type Expansion Dam Systems for Bridge Decks, Final Report," Pennsylvania Department of Transportation, Project 90-53, 1996.

27. Roeder, C.W. "Fatigue Cracking in Modular Expansion Joints, Final Report," Washington State Department of Transportation, Project WA-RD 306.1, 1993.

28. Roper, T.H., Henley, E.H. "Expansion Joint Systems for the Transition Spans, Bridge No. 90/25," Washington State Department of Transportation, Project WA-RD 356.1, 1994.

29. Roeder, C.W. “Field Measurements of Dynamic Wheel Loads on Modular Expansion Joints, Final Report,” Washington State Department of Transportation, Project WA-RD 369.1, 1995.

30. Roper, T.H., Henley, E.H. “Martin Way O’Xing Ceva-Crete Expansion Joint System,” Washington State Department of Transportation, Project WA-RD 222.1, 1990.

31. Roper, T.H., Henley, E.H. “Martin Way O’Xing Ceva-Crete Expansion Joint System, Bridge No. 5/337,” Washington State Department of Transportation, Project WA-RD 349.1, 1994.

32. Roper, T.H., Henley, E.H. “Pacific Avenue O’Xing Evazote 50 Expansion Joint Seal,” Washington State Department of Transportation, Project WA-RD 149.1, 1990.

33. Stephenson, R.G., Mustafa, M.B. “Evaluation of Watertight Bridge Expansion Joints,” North Carolina Department of Transportation, Project NC-170-3 (2) – 10, 1999.

34. Williams, G.G. “Koch Bridge Joint Systems, Final Report,” Oklahoma Department of Transportation, Research and Development Division, Project FHWA A/OK 93(08), 1993.

35. Williams, G.G. “XJS Expansion Joint System, Construction Report,” Oklahoma Department of Transportation, Research and Development Division, Project OK 94(__), 1993.

36. Williams, G.G., Sawyer, M.E. “Illbruck Willseal Bridge Joint Seal, Preliminary Report,” Oklahoma Department of Transportation, Research and Development Division, Project FHWA/OK 97(02), 1997.