ARIZONA DEPARTMENT OF TRANSPORTATION

REPORT NUMBER: FHWA-AZ97-450

BRIDGE APPROACH / ANCHOR SLAB JOINT EVALUATION

Final Report

Prepared by:
Shan Sundaram
Michael Dadik
Sundaram Engineering, Inc.
833 West Portobello Avenue
Mesa, AZ 85210

July 1997

Prepared for:
Arizona Department of Transportation
206 South 17th Avenue
Phoenix, Arizona 85007
in cooperation with
U.S. Department of Transportation
Federal Highway Administration

The contents of this report reflect the views of the authors who are responsible for the facts and the accuracy of the data presented herein. The contents do not necessarily reflect the official views or policies of the Arizona Department of Transportation or the Federal Highways Administration. This report does not constitute a standard, specification, or regulation. Trade or manufacturer's names which may appear herein are cited only because they are considered essential to the objectives of the report. The U.S. Government and the State of Arizona do not endorse products or manufacturers.

Technical Report Documentation Page

1. Report No. FHWA-AZ 97 - 450	2. Government Accession No.	3. Recipient's Catalog No.
4. Title and Subtitle BRIDGE APPROACH/ANCHOR SLAB JOINT EVALUATION		5. Report Date JULY 1997 6. Performing organization code
7. Author Shan Sundaram, Michael Dadik		8. Performing Organization Report No.
9. Performing Organization Name and Address SUNDARAM ENGINEERING, INC. 833 WEST PORTOBELLO AVENUE MESA, ARIZONA 85210		10. Work Unit No. 11. Contract or Grant No. SPR-PL-1(49) 450 T96-09-A0015
12. Sponsoring Agency Name and Address ARIZONA DEPARTMENT OF TRANSPORTATION 206 S. 17TH AVENUE PHOENIX, ARIZONA 85007 Project Manager: Tim Wolfe		13. Type of Report and Period Covered FINAL, 11-20-96 THRU 7-20-97 14. Sponsoring Agency Code

15. Supplementary Notes
Prepared in cooperation with the U.S. Department of Transportation, Federal Highway Administration

16. Abstract

Portland cement concrete pavements between bridges expand in warm weather and contract when cooled and due to shrinkage of concrete. Pavement movements have to be accommodated close to the bridge for the safety of the bridge structure. Reinforced anchor slabs with the monolithic lugs underneath, are provided to resist the pavement movement by the passive soil pressure after mobilization. Nevertheless, additional positive relief is provided by the joint between the approach slab and the anchor slab, which butts against the PCCP. The function of this joint is crucial to the safety of the bridge. A material or device that will not let water and debris inside the joint and at the same time allows sufficient expansion and contraction under traffic and weather conditions, is required to seal the joint. ADOT Construction and Maintenance staff have been observing the ineffectiveness of the joint in several locations on Arizona Freeways, due to debris and water penetrating the joint. This prompted ADOT to undertake the evaluation of the existing joint and to improve or modify the joint to make it more functional and efficient. Sundaram Engineering, Inc. the Consultant to ADOT on this Project, has gathered pertinent data on the subject from the available literature and also solicited information from Departments of Transportation from other States regarding the joint. The firm also undertook the inspection of about 30 bridge approaches and evaluated the performance of existing joints. Hot poured coal tar sealant (ASTM D3406) is the predominant material used in sealing the joint. Though the designated width is 75 mm, the actual widths varied from 38 mm to 100 mm. The inspection and evaluation revealed two major types of joint failure, adhesive failure (debonding from the edges of slabs) and loss of flexibility of the material. The inspection also revealed not following proper and adequate installation procedures in the construction of the joint, is a major contributing factor to the joint failure. Based on the study of the available joint systems and materials, five new solutions for the joint were devised and proposed. The new joints have improved quality in the material of the sealant (low modulus hot poured sealant, silicone sealant and membrane foam sealant) and compression and strip seals. Adaptation of these to the existing joints is also discussed. Joint preparation requirements and termination treatments at side barriers are also addressed.

17. Key Words Joint types, Approach/Anchor slab, Sealants, Joint installation, PCCP expansion		18. Distribution Statement Document is available to the U.S. Public through the National Technical Information Service, Springfield, Virginia 22161	23. Registrant's Seal
19. Security Classification Unclassified	20. Security Classification Unclassified	21. No. of pages	22. Price

Registered Professional Engineer (Structural)
CERTIFICATE NO. 14764
N. SHANMUGHA SUNDARAM
Date Signed 8-8-97
ARIZONA, U.S.A.

SI* (MODERN METRIC) CONVERSION FACTORS

APPROXIMATE CONVERSIONS TO SI UNITS

Symbol	When You Know	Multiply By	To Find	Symbol
		LENGTH		
in	inches	25.4	millimeters	mm
ft	feet	0.305	meters	m
yd	yards	0.914	meters	m
ml	miles	1.61	kilometers	km
		AREA		
in^2	square inches	645.2	millimeters squared	mm^2
ft^2	square feet	0.093	meters squared	m^2
yd^2	square yards	0.836	meters squared	m^2
ac	acres	0.405	hectares	ha
mi^2	square miles	2.59	kilometers squared	km^2
		VOLUME		
ft oz	fluid ounces	29.57	milliliters	mL
gal	gallons	3.785	liters	L
ft^3	cubic feet	0.028	meters cubed	m^3
yd^3	cubic yards	0.765	meters cubed	m^3

NOTE: Volumes greater than 1000 L shall be shown in m^3.

Symbol	When You Know	Multiply By	To Find	Symbol
		MASS		
oz	ounces	28.35	grams	g
lb	pounds	0.454	kilograms	kg
T	short tons (2000 lb)	0.907	megagrams	Mg

APPROXIMATE CONVERSIONS FROM SI UNITS

Symbol	When You Know	Multiply By	To Find	Symbol
		LENGTH		
mm	millimeters	0.039	inches	in
m	meters	3.28	feet	ft
m	meters	1.09	yards	yd
km	kilometers	0.621	miles	mi
		AREA		
mm^2	millimeters squared	0.0016	square inches	in^2
m^2	meters squared	10.764	square feet	ft^2
m^2	meters squared	1.19	square yards	yd^2
ha	hectares	2.47	acres	ac
km^2	kilometers squared	0.386	square miles	mi^2
		VOLUME		
mL	milliliters	0.034	fluid ounces	fl oz
L	liters	0.264	gallons	gal
m^3	meters cubed	35.315	cubic feet	ft^3
m^3	meters cubed	1.31	cubic yards	yd^3
		MASS		
g	grams	0.035	ounces	oz
kg	kilograms	2.205	pounds	lb
Mg	megagrams	1.102	short tons (2000 lb)	T

TEMPERATURE (exact)

Symbol	When You Know	Do The Following	To Find	Symbol
°F	Fahrenheit temperature	°F - 32 ÷ 1.8	Celcius temperature	°C

TEMPERATURE (exact)

Symbol	When You Know	Do The Following	To Find	Symbol
°C	Celcius temperature	°C x 1.8 + 32	Fahrenheit temperature	°F

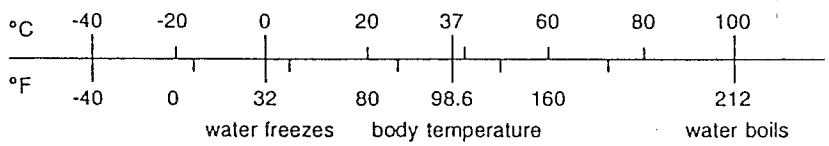

METER: a little longer than a yard (about 1.1 yards)
LITER: a little larger than a quart (about 1.06 quarts)
GRAM: a little more than the weight of a paper clip
MILLIMETER: diameter of a paper clip wire
KILOMETER: somewhat further than 1/2 mile (about 0.6 mile)

*SI is the symbol for the International System of Measurement

TABLE OF CONTENTS

			Page
Chapter I		Introduction	1
Chapter II		Joint Function, Requirements and Materials	4
Chapter III		Inspection and Evaluation of Joints	9
Chapter IV		Solutions	15
Chapter V		Conclusions	25
		References	27
Appendices	1	Bridge Inventory	A1-A3
	2	Joint Systems and Materials in Market	A4-A5
	3	Joints of other DOTs	A6-A12
	4	ADOT PRIDE Product Evaluation Work Plan	A13-A23

LIST OF FIGURES

		Page
Figure 1	Current ADOT Joint	2
Figure 2	Cyclic Movement at Joint	5
Figure 3	Field Evaluation Form	10
Figure 4	Low Modulus Hot Poured Sealant Joint	17
Figure 5	Silicone Sealant Joint	18
Figure 6	Precompressed Foam Joint	19
Figure 7	Compression Seal Joint	20
Figure 8	Armored Strip Seal Joint	21
Figure 9	Terminal Treatment of Joints	22
Figure 10	Joint Seal Remediation for Existing Joints	23

LIST OF TABLES

Table 1	Inspection and Evaluation Summary	12 -13

CHAPTER I

INTRODUCTION

Portland Cement Concrete Pavements on highways expand and contract due to temperature differentials. Contraction occurs due to shrinkage also, but most of the shrinkage takes place within the initial few weeks after concrete is poured. When these movements are restricted, compressive and tensile stresses are developed leading to cracks in the pavement. In continuously reinforced concrete pavements, the reinforcement allows the pavement to withstand these stresses; however continuous reinforced pavement highway is an expensive proposition. Arizona highways employ plain Portland cement concrete pavements with control joints. These joints provide controlled cracking along designated lines rather than random cracking. They do not allow for pavement movement or what is commonly referred to as pavement growth. Pavement growth occurs after incompressible material enters a joint when the pavement is cool. As the pavement warms and the concrete expands, joint closure is restricted by the incompressible material. When PCCP adjoins bridge structures, pavement movements have to be accommodated on both sides of the bridge for the safety of the bridge structure.

In order to provide for this movement, ADOT has been using two features on the concrete paved highways, since early 1980. One is the reinforced concrete anchor slab to handle pressure resulting from pavement expansion. This is a 300 mm thick concrete slab, 5 to 15 meters long (depending on the length of PCCP before and after the bridge) with one or two vertical lugs 600 mm wide and 1100 mm to 1700 mm deep. These vertical lugs provide passive resistance to the PCCP movement after mobilization of the passive soil pressure. Stresses caused by this pressure are withstood by the reinforcement in the anchor slab. The anchor slab also protects the integrity of the PCCP. Unrestrained pavement growth is accommodated by the second feature . This is the joint between the approach slab and the anchor slab. Since a joint is provided, steps have to be taken to seal the joint and to make certain that the seal is capable of expansion and contraction and can accept pavement growth, allowing the joint to function under traffic and weather conditions. This would ensure the safety of the approach slab and the bridge structure that is ahead or behind the joint.

The metric equivalent of the joint as used now is shown in Figure 1. In recent years, ADOT construction and maintenance staff have been observing the deficiencies in the function of the joint. The hot poured sealant at the top layer is peeling off the edges of the slabs; water and debris find their way through the gaps between the sealant and the slabs and also through the side joints between the slab and the barriers. The material of the sealant is becoming dry and brittle and the approach slab experiences settlement adjacent to the joint. Spalling has occurred along the joint at random due to the impact of the traffic. These concerns have prompted ADOT to have a consultant investigate and evaluate the joint and make recommendations to improve and /or modify the joint to make it more functional, efficient and durable. Sundaram Engineering, Inc. is pleased to have been hired by ADOT and to have the opportunity to undertake this task and report on the findings with solutions for ADOT's verification.

The evaluation consisted of four steps.

- Conduct literature survey to gather information on joint function, requirements and materials.

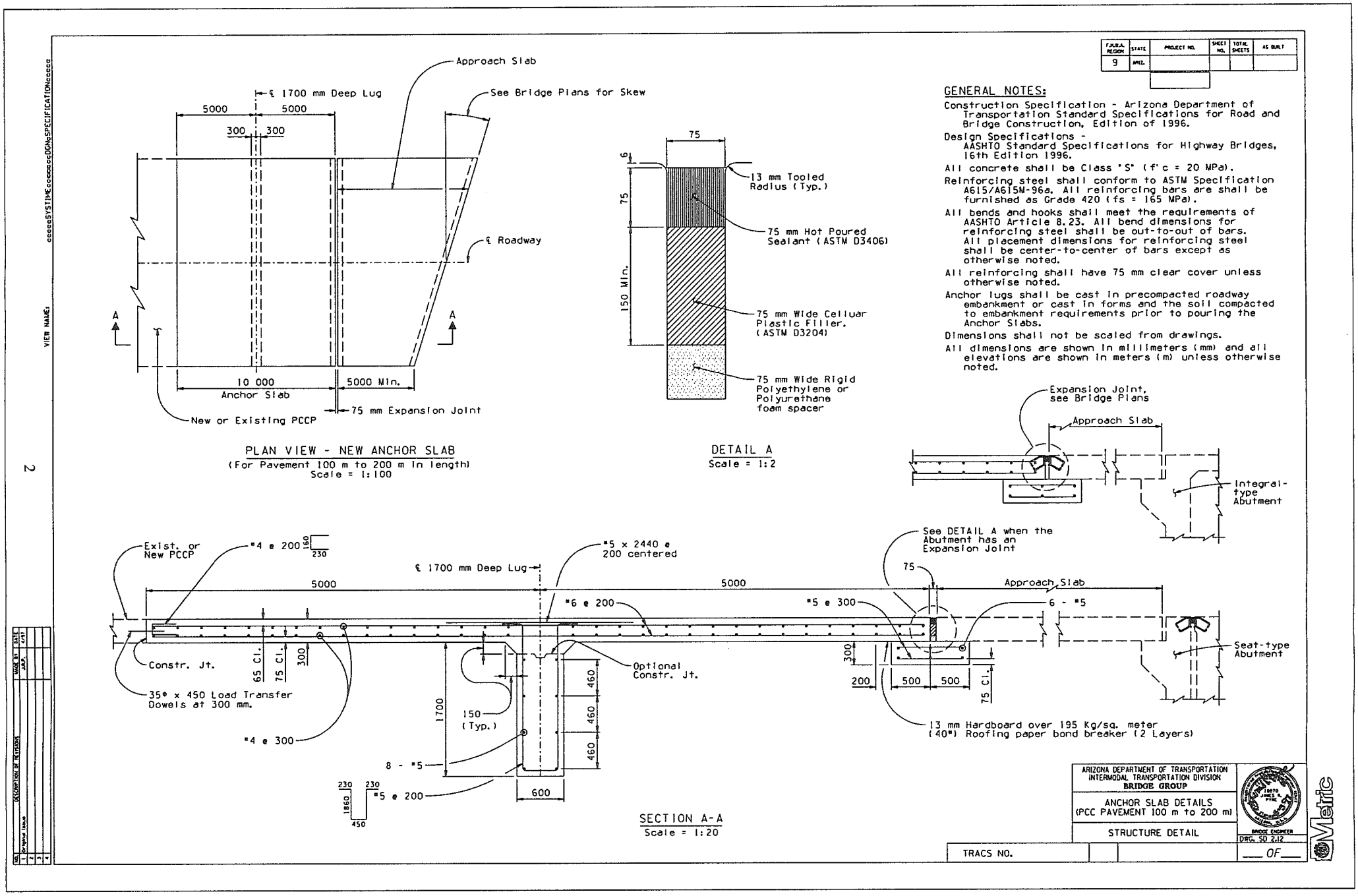

Figure 1. Current ADOT Joint

This includes contacting DOTs of other States (1)*. Responses from them provided an insight into the different joint types in use.

- Conduct inventory of bridges at ADOT Records since early 1980s, select the ones with approach/anchor slab joint. Prepare an evaluation form, inspect the joints and collect the data.

- Based on the above information, devise solutions of joint systems for ADOT's verification. Indicate ways to adapt them to existing joints. Furnish terminal treatment of joints at side barriers.

- Present the evaluation findings and solutions in the form of a Research Report with conclusions.

The chapter on Joint Function, Requirements and Materials summarizes the information obtained from different sources including the DOTs of other States, pertinent to this investigation. The materials which have been subject to test and in use are listed in the Appendix 2 (pages A4 - A5). The types of joints used by some of the other States as their Standards that are representative of and pertinent to this study are furnished in the Appendix 3 (pages A6-A12)..

The chapter on Inspection and Evaluation of Joints present the evaluation procedure and summarizes the findings on the joints inspected in a tabular form. The table lists the location of the bridges, the joint type and the type of failures observed. Possible causes are also indicated.

The chapter on Solutions stems from the above two chapters. It discusses the qualities that a joint should have for its proper function. Solutions for improved joint systems are furnished. Modification of the existing joints are discussed. Terminal treatment of the joints is presented. The importance of proper installation procedures is stressed.

The final chapter presents the Conclusions arrived at as a result of this study. The Arizona Transportation Research Center guidelines are followed in the preparation of this Research Report.

---

* Numbers in parentheses refer to the references furnished at the end of the report

CHAPTER II

JOINT FUNCTION, REQUIREMENTS AND MATERIALS

The information gathered from the literature and from DOTs of other States provided an insight into the joint function, requirements of the joint and materials in use. A summary of the joint system used by DOTs of other States as their Standards is furnished at the end of this Chapter. The joint between the approach slab and the anchor slab functions the same way as the cyclic control joints in the pavement, except the approach/anchor slab joint is more of a pavement growth joint. The cycles of expansion and contraction and the consequences of intrusive incompressibles are shown in Figure 2. After a joint opens during the contraction cycle, debris falls into the joint. During the expansion cycle, the expansion is restricted. From Figure 2, the stress $f_c = E_c \epsilon = 4800\ (20)^{1/2} \times .0003 = 6.4$ MPa., where $f_c' = 20$ MPa, .0003 = average shrinkage strain = $(\Delta_c - \Delta_{re})/L_s$, L_s = the length between joints. This means, in a 20 meter pavement between the joints, 6 mm (20 x 1000 x .0003) is filled with debris. The pavement undergoes or imparts a stress of 6.4 MPa at the assumed 50°°C. If there is no anchor slab, this force is imparted on the structure.

The requirements of a joint are enunciated by Wahls, in his paper on Design and Construction of Bridge approaches (2). " The joints must transfer traffic loads and be able to accommodate thermal expansion and contraction of the pavement. The joints must be sealed to prevent entry of water and debris. When the pavement movements are fully restrained, very large compressive stresses and buckling may develop." As another author Burke Jr. puts it (4), "there is great growth potential of unrestrained rigid pavement and great pressure potential of restrained rigid pavement". Providing for growth or providing for relief of pressure is same. There are different means of achieving each. That is the reason, the joint is also called pressure relief joint, in which case wide strip of bitumen or less stiff material is used to fill a wide joint. The flexible material relieves the pressure imposed by the movement of the pavement. These types of joints are used in the States of Kansas, New York, Pennsylvania, West Virginia and Connecticut (See Appendix).

The Design Elements that one should look for in a joint are further elaborated by Moussa Issa et al of Florida DOT in their paper "On Site Evaluation of Bridge Deck Expansion Joints" (3). They are as follows.

- shall accommodate full expansion and contraction range of movements anticipated.
- shall have adequate anchorage and structural capacity.
- shall provide good riding surface.
- shall not induce undue stress in structure due to expansion and contraction.
- shall be silent and vibration free under traffic.
- shall facilitate maintenance repair, removal and replacement.
- shall be leak proof with continuous sealing element.
- shall be corrosion resistant.
- shall not be a catalyst or vehicle for electrolytic action.
- The joint seal shall be durable.
- Material and installation shall be cost effective.
- shall provide ease of installation.
- Time of installation shall be reasonable, since this has bearing on the length and degree of traffic interruption.

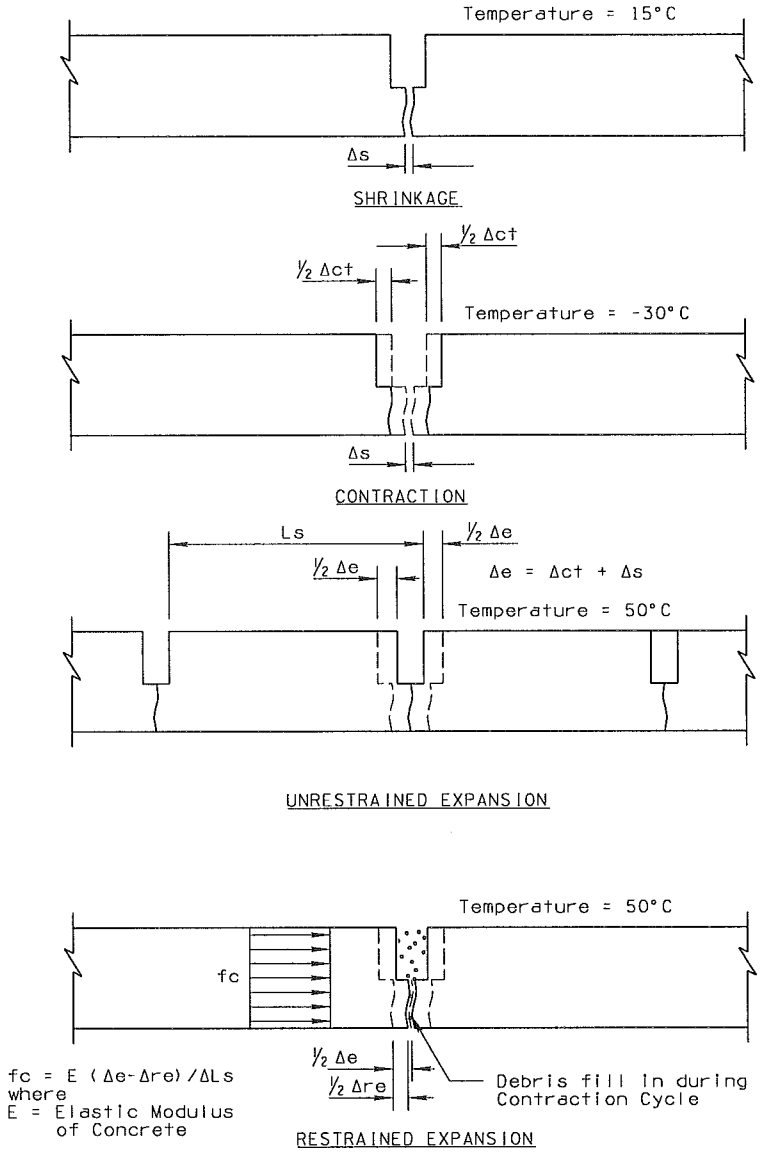

Figure 2. Cyclic Movement at Joint

- Any failure shall not pose danger to traffic.

The design of the joint shall also take into consideration that the wear and deterioration at edges of adjacent slabs reduce the effectiveness of expansion joints. These high stress zones shall be treated with elastomeric and polymeric nosing materials. For the solutions proposed in this report (Chapter IV), epoxy conrete is recommended for the nosing material. Elastomeric concrete may be more resilient, but has less than 50% of the bond and compressive strengths of epoxy concrete. Alternately, better tooling of the edges of the slabs may be adapted dispensing with the nosing material. Another important factor to be considered in choosing the material for the joint is that the joint movement shall be less than the strain limit of the sealant. The desirable range for the shape factor (depth/width) of the sealant is recommended to be 1 to 1.5 (5). This will be hard to satisfy with silicone joints. The approach/anchor slab joint shall be at least 50 mm, unless bridges are closer than 100 meters.

To aid in this investigation, information was sought from DOTs of other States. A summary of the responses which are pertinent to this study, from the States who answered our request is furnished below.

Arkansas: The State provides 3 expansion joints, one between the approach slab and the PCCP and the other two in the PCCP itself, spaced at about 5 meters apart. The joint is 40 mm wide with 20 mm thick sealant over 50 mm backer rod. The joint is supported over 915 x 305 mm sleeper slab.

Colorado: The State DOT recommends increase in shape factor (depth / width) of the present hot poured sealant from 1 to 3 to allow the stretch of the sealant and to resist debonding. The State uses an armored strip seal expansion joint 75 mm to 203 mm between the approach slab and the PCCP. The joint butts against a reinforced inverted Tee sleeper slab. The PCCP is presumed to rest on the sleeper slab.

Connecticut: The State provides 3 to 5 meter wide pressure relief joint with 200 mm thick bituminous concrete and subbase, between the approach slab and PCCP.

Florida: There is no anchor slab. There are four PCCP transverse expansion joints in a stretch of 5.5 meters of PCCP, including the one between the approach slab and the PCCP. The 57 to 75 mm wide joint has a recessed compression seal resting on jambs of narrower opening.

Georgia: The State uses preformed joint filler between the approach slab and backwall of the abutment. The top 1" of the joint is sealed with silicone sealant.

Illinois: The State uses a stretch of CRCP between approach slab and PCCP. The CRCP is similar to the anchor slab. The joint between the approach slab and CRCP is 100 mm preformed joint seal over reinforced sleeper slab on subgrade.

Iowa: The State allocates 18.3 meters minimum Pavement between the approach slab and the PCCP to provide 4 different doweled joints. The joints beginning with the end of approach slab are at 6.1 m centers. The top of the joint is filled with 6 mm wide hot poured sealant. The third joint from end is a 100 mm expansion joint with preformed urethane foam expansion joint filler.

Kansas: There is no anchor slab. A pressure relief joint is provided between the reinforced approach slab and the PCCP. This is 100 mm preformed urethane foam joint material with lubricant adhesive. In addition, there is an expansion joint within the approach slab. This joint system is shown in the Appendix page A7 under Joints of other DOTs.

Kentucky : The State uses a 38 mm wide joint between PCCP and the approach slab. The joint is recessed 6 mm and contains self - leveling silicone sealant over backing rod. The joint edges are armored with 16 mm x 203 mm steel plates anchored to slabs. The bottom of he joint has 38 mm wide styrofoam.

Maryland: The State does not use approach slabs or anchor slabs. It uses 15 meters of bituminous pavement behind the abutment backwall, before commencing the PCCP.

Minnesota: The joint is between the approach slab and the PCCP. It is 102 mm wide and supported by 1.2 meter x 305 mm sleeper slab. The joint is formed with preformed filler topped by a hot poured sealant.

New York: The State uses 1.5 meter wide strip of pressure relief joint with asphalt concrete between the approach slab and PCCP. There is a 2.3 meter sleeper slab centered on the joint width. This joint is shown in the Appendix page A8 under Joints of other DOTs.

Oklahoma: The State does not use similar joints. However, the DOT recommends Dow Corning 902 rapid cure silicone sealant in place of hot poured sealant. It also recommends the application of the sealant in summer, to avoid use of excess sealant which will be squeezed out during joint closure and will get damaged by the vehicles.

Oregon: The State concentrates on the joint between the approach slab and the abutment backwall. It prefers Dow 902 poured joint sealant to hot poured sealant. This requires sand blasting the joint faces and applying primer to concrete. The State also discourages the rigid polyurethane foam spacer on account of its incompressibility. The State seems to be using lot of CRCP.

Pennsylvania: The State provides a 300 mm wide pressure relief joint with bituminous binder between the approach slab and a transition reinforced concrete pavement (minimum 4 meters long). A construction joint is introduced between the transition pavement and the regular PCCP. This joint is shown in the appendix page 9 under joints of other DOTs.

Texas: The State provides a 40 mm wide joint with preformed joint sealant (extruded elastomeric material with multi-channeled shape) or with sealing compound (self-leveling or non sag low modulus or rapid curing low modulus silicone) between 6 meter reinforced approach slab and the PCCP. The joint is supported by 700 mm x 250 mm sleeper slab. Between the pavement and the sleeper slab, two layers of 1.46 kg/m^3 roofing felt with graphite lightly sprinkled between the layers is provided. The joint is shown in the Appendix page A10 under joint systems of other DOTs.

Washington State: The State provides a 40 mm wide and 6 mm recessed compression seal between the approach slab and abutment seat wall. Apparently, the PCCP butts against the approach slab.

Wisconsin: The State provides a 2 " expansion joint between the abutment backwall and approach slab and a 1" doweled expansion joint between the approach slab and the PCCP.

West Virginia: The State uses transition pavement in lieu of the anchor slab, butting 6.1 meter approach slab. The joint is not between the approach slab and the transition pavement, but between the transition pavement and the PCCP. This a pressure relief joint with hot poured bituminous concrete. The joint is shown in the Appendix page A11 under Joint Systems of Other DOTs.

Wyoming: There is no anchor slab. Both pavement growth and expansion are taken care of by the 75 mm joint between the approach slab and the PCCP. There is a 130 mm wide and 50 mm deep nosing material either side of the joint to safeguard against spalling. This joint is shown in the Appendix page A12 under Joint Systems of Other DOTs.

CHAPTER III

INSPECTION AND EVALUATION OF JOINTS

For identifying the bridges to be inspected, an inventory of bridges with approach/anchor slab joints was made with the assistance of the ADOT Bridge Management Team. ADOT maintains a data base of more than 1000 bridges. The Approach/Anchor slab joint was used on bridges constructed after 1986 on concrete paved highways. This limited the number of bridges constructed with the joint in question to 183. The inventory list is furnished in the Appendix at the end of the report. Among these 183 bridges, thirty one bridges in the Phoenix Metropolitan area were inspected with the assistance of the ADOT District One Construction and maintenance staff. These bridges are identified in the inventory. Necessary traffic closures were arranged by the staff during the inspection.

For the inspection purposes a field evaluation form was developed (Figure 3) based on Rahman and Scofield's research report (6). Data regarding the following qualities of the joint were collected.

- General Pavement Condition: The condition of the approach and anchor slab, cracks and settlements.

- Sealant Type : Type of material used to seal the joint. In all but four bridge joints, the sealant is hot poured coal tar per ADOT's standard. Silicone sealant has been used in the approaches of one bridge and three bridges have compression seals installed

- Flexibility of the sealant or seal: The ability of the material to retain its original shape after a finger pressed into the seal is removed. This quality is rated as excellent, good, medium or poor. Localized cracking of the hardened surface of the joint seal material determined whether the seal rated good or medium. Seals rated poor were hard and were reinspected when possible, at higher temperatures because of the significant variation, due to temperature, on the force required to deform the material.

- Missing sealant: The gap in the joint is measured and recorded to the nearest tenth of the meter.

- Adhesive Failure: This failure indicates the debonding of the sealant or seal from the edges of the slab. Two types of failure were recorded; one is the full depth debonding where no adherence exists between the material and the slabs; the other is the partial depth failure indicating the debonding does not penetrate the full depth of the seal. The extent and depth of debonding was observed by sliding a one inch stiff blade spatula between the slab edges and the seal. The length of debonding was recorded to the nearest tenth of a meter. The average depth of debonding was recorded, but not furnished in the summary.

- Cohesive Failure: This is the cracking and checking of the sealant within the material. This is due to oxidation of the material due to UV rays and results in small cubes of the sealant breaking off and exposing new material. In this case also, two types of failures were observed, full depth and partial depth. Lengths of these failures were recorded to the nearest tenth of a meter. Cohesive failure is

APPROACH/ANCHOR SLAB JOINT EVALUATION FORM

STRUCTURE NUMBER _____
STRUCTURE NAME _____ ROUTE _____ MILEPOST _____
APPROACH/DEPART _____ DIRECTION _____
OBSERVER _____ DATE _____
WEATHER _____ TEMP _____ TIME _____
TRAFFIC CONTROL _____

GENERAL PAVEMENT CONDITION _____

SEALANT TYPE _____
FLEXIBILITY (GOOD, MEDIUM, BAD) _____
MISSING SEALANT _____
ADHESIVE FAILURE _____
PARTIAL DEPTH _____
FULL DEPTH _____
COHESIVE FAILURE _____
PARTIAL DEPTH _____
FULL DEPTH _____
INTRUSION OF INCOMPRESSIBLES _____
JOINT WIDTH _____
SEALANT RECESS _____
SPALLING _____

COMMENTS, SKETCH

Figure 3. Field Evaluation Form

evident by visual inspection. The average depth of failure in partial depth oxidation was measured, but not furnished in the summary.

- Intrusion of Incompressibles: The typical incompressibles were sand and gravel in areas of adhesive failure. However, due to the large width of the joint, there were not large enough incompressibles to prevent joint movement.

- Joint Width: The width of the joint was measured in several locations along the roadway width. An average value was recorded to the nearest 5 mm. Joint widths of some bridges were measured both in winter and summer months. There was no significant difference.

- Sealant Recess: Sealant recess varied within each joint and from joint to joint. This is, due in part, to the effects of the roadway cross slope on the seal during installation. The recess was measured in several locations of each joint to the nearest 5 mm and recorded accordingly.

- Spalling: This condition along the edges of the approach and anchor slabs were recorded as minor, when some spalling has occurred but had not compromised the integrity of the joint. In case of spalling that allowed infiltration of water, the length of spalling was measured and recorded to the nearest tenth of a meter.

The bridges inspected and the data gathered are summarized in Table 1.

Observations from inspection

The general condition of the seal does not seem to depend on the age of the seal. Seals installed in 1987 are in conditions similar to seals installed in 1996. Exposure to traffic and sun seem to affect the aging process. Older seals in very good condition are exposed to less traffic and in general adhesive failure occurs more frequently along wheel tracks of travel lanes. It was also noted that the seals buried under sand (typically near the pavement edge and along lane stripes) were more flexible than seals exposed to sunlight. For example, on Structure Number 2128 built in 1989, the north end seal shaded by another bridge during summer months, was in very good condition. The south seal, which is never shaded, rated fair.

Exposure to water also affects the aging process of the sealant. Cohesive failures frequently occur in areas where water accumulates during storms, typically around catch basins.

Spalling due to traffic also presents a problem for an effective joint seal. Spalling results in a crack between the slab edge and the joint seal, compromising the seal. While spalling was not as severe a problem as adhesive failure, it contributes to problems with this seal system. Spalling occurs more frequently in areas where the slab edge is irregular and rough.

Another factor increasing the likelihood of infiltration, is the placement of the Approach/Anchor slab joints adjacent to retaining walls. Movement of these walls away from the roadway result in openings along the edge of the slab next to the walls. In addition, at the end of the retaining walls (where barriers or guard rails begin), the joint between the curb and gutter moves, resulting in larger than anticipated openings. Currently, these areas are not sealed with the

Table 1. Inspection and Evaluation Summary

Structure Number and Bridge End		Year of Const.	General Condition	Flexibility	Missing Sealant (meter)	Adhesive Failure Partial (meter)	Adhesive Failure Full (meter)	Cohesive Failure Partial (meter)	Cohesive Failure Full (meter)	Spalling	Joint Width* (mm)	Joint Recess (mm)	Comments
1988	Approach	1987	Excellent	Very Good	0.0	0.0	0.0	0.0	0.0	none	55	15	Low traffic volume
1988	Depart	1987	Excellent	Very Good	0.0	0.0	0.0	0.0	0.0	none	55	15	Low traffic volume
2040	Approach	1989	Fair	Medium	0.0	12.2	12.2	1.9	1.0	none	70	10	Medium traffic volume
2040	Depart	1989	Fair	Medium	0.0	3.1	3.1	3.1	0.0	none	85	10	Medium traffic volume
2122	Approach	1989	Fair	Good	0.0	1.0	3.7	0.0	0.0	0.6 m	105	10	Concrete edge is rough
2122	Depart	1989	Fair	Good	0.0	0.4	1.3	0.0	0.0	none	80	10	Concrete edge is rough
2128	Approach	1989	Fair	Medium	0.0	1.9	0.0	0.0	0.0	none	80	10	Fair condition
2128	Depart	1989	Very Good	Very Good	0.0	0.0	6.5	0.0	0.0	none	80	15	Joint in partial shade
1927	North	1990	Fair	Poor	0.0	3.4	1.3	1.6	0.0	minor	80	10	Temp. at inspection 70 F
1927	South	1990	Fair	Poor	0.0	2.2	1.3	2.2	0.0	minor	80	10	Fair condition
2048	North	1990	Fair	Poor	0.0	0.7	0.0	0.0	0.0	0.9 m	70	15	Temp. at inspection 60 F
2048	South	1990	Fair	Poor	0.0	0.0	0.0	0.7	1.3	none	70	15	Fair condition
2053	North	1990	Poor	Poor	0.0	21.4	0.0	0.0	0.0	none	85	0	Compression Seal
2053	South	1990	Poor	Poor	0.0	21.4	0.0	0.0	0.0	none	70	0	Compression Seal
2063	Approach	1990	Good	Medium	0.0	0.0	0.0	0.0	0.0	none	65	15	Temp. at inspection 70 F
2063	Depart	1990	Good	Medium	0.0	0.0	0.0	0.0	0.0	none	80	20	Good condition
2064	Approach	1990	Very Good	Medium	0.0	0.0	0.0	0.0	0.0	none	70	20	Good condition
2064	Depart	1990	Very Good	Medium	0.0	0.0	0.0	0.0	0.0	none	70	20	Good condition
2074	East	1990	Poor	Poor	0.0	16.8	1.9	10.7	0.0	minor	80	10	Angle guard on anchor slab
2074	West	1990	Poor	Poor	5.5	1.0	8.3	18.0	0.0	minor	80	10	Angle guard on anchor slab
2155	Approach	1990	Excellent	Good	0.0	0.0	0.0	0.0	0.0	minor	90	10	Excellent Condition
2155	Depart	1990	Excellent	Good	0.0	0.0	0.0	0.0	0.0	minor	90	10	Excellent Condition
2240	Approach	1990	Good	Good	0.0	0.0	0.7	0.0	0.0	none	85	10	Spalling at wheel tracks
2240	Depart	1990	Good	Good	0.0	0.0	0.7	0.0	0.0	none	85	10	Spalling at wheel tracks
2050 NB	Approach	1990	Poor	Poor	0.0	3.1	0.0	3.1	0.0	none	90	0	No Full Depth Failure
2050 NB	Depart	1990	Poor	Poor	0.0	6.1	0.0	3.1	0.0	none	80	0	No Full Depth Failure
2050 SB	Approach	1990	Poor	Poor	0.0	3.1	0.0	3.1	0.0	none	85	0	No Full Depth Failure
2050 SB	Depart	1990	Poor	Poor	0.0	12.2	0.0	12.2	0.0	none	85	0	No Full Depth Failure
2199	Approach	1991	Very good	Poor	0.0	0.4	0.0	0.0	0.0	none	65	10	Temp. at inspection 65 F
2200	Depart	1991	Very good	Poor	0.0	0.0	0.0	0.0	0.0	none	80	10	Temp. at inspection 65 F
2218	Approach	1991	Fair	Good	0.0	0.0	0.0	2.2	0.7	none	80	20	Fair condition
2218	Depart	1991	Fair	Good	0.0	0.0	0.0	2.2	2.5	none	80	20	Fair condition
2220	Approach	1991	Good	Good	0.0	0.4	1.9	0.0	0.0	minor	100	30	Failure at lap in joint material
2220	Depart	1991	Good	Good	0.0	0.0	0.7	0.0	0.0	minor	100	30	Good condition

* No significant change in joint widths measured in summer and winter months

Table 1 (cont'd.) Inspection and Evaluation Summary

Structure Number and Bridge End		Year of Const.	General Condition	Flexibility	Missing Sealant (meter)	Adhesive Failure Partial (meter)	Adhesive Failure Full (meter)	Cohesive Failure Partial (meter)	Cohesive Failure Full (meter)	Spalling	Joint Width* (mm)	Joint Recess (mm)	Comments
2134	Approach	1992	Excellent	Good	0.0	0.0	0.0	0.0	0.0	none	85	10	Low traffic volume
2134	Depart	1992	Excellent	Good	0.0	0.0	0.0	0.0	0.0	none	85	10	Low traffic volume
2135	Approach	1992	Excellent	Good	0.0	0.0	0.0	0.0	0.0	none	90	10	Low traffic volume
2135	Depart	1992	Excellent	Good	0.0	0.0	0.0	0.0	0.0	none	85	10	Low traffic volume
2209	Approach	1992	Fair	Good	0.0	0.0	4.3	0.0	0.0	none	40	10	Silicone Sealant
2211	Approach	1992	Fair	Good	0.0	0.0	4.6	0.0	2.2	minor	90	15	Seal is wearing at travel lane
2211	Depart	1992	Fair	Good	0.0	0.0	3.1	0.0	0.0	minor	90	15	Seal is wearing at travel lane
2069 EB	Approach	1992	Excellent	Good	0.0	0.0	0.0	0.0	0.0	none	85	10	Low traffic volume
2069 EB	Depart	1992	Excellent	Good	0.0	0.0	0.0	0.0	0.0	none	85	10	Low traffic volume
2069 WB	Approach	1992	Excellent	Good	0.0	0.0	0.0	0.0	0.0	none	85	10	Low traffic volume
2069 WB	Depart	1992	Excellent	Good	0.0	0.0	0.0	0.0	0.0	none	80	10	Low traffic volume
2070 EB	Approach	1992	Excellent	Good	0.0	0.0	0.0	0.0	0.0	none	85	10	Low traffic volume
2070 EB	Depart	1992	Excellent	Good	0.0	0.0	0.0	0.0	0.0	none	85	10	Low traffic volume
2070 WB	Approach	1992	Excellent	Good	0.0	0.0	0.0	0.0	0.0	none	85	10	Low traffic volume
2070 WB	Depart	1992	Excellent	Good	0.0	0.0	0.0	0.0	0.0	none	85	10	Low traffic volume
2133	North	1993	Poor	Medium	0.0	0.0	22.9	0.0	2.2	0.9 m	90	0	Joint edge very uneven
2133	South	1993	Poor	Medium	0.0	0.0	6.1	0.0	0.0	0.6 m	90	0	Joint edge very uneven
2228	Approach	1996	Excellent	Excellent	0.0	0.0	0.0	0.0	0.0	none	105	15	Concrete edge is smooth
2268	Approach	1996	Excellent	Excellent	0.0	0.0	0.0	0.0	0.0	none	100	10	Compression Seal
Bell/17	Approach	0	Poor	Medium	0.0	18.3	13.8	4.6	4.6	none	115	10	High traffic volume
Bell/17	Depart	0	Poor	Medium	0.7	0.0	18.3	4.6	7.7	none	115	10	High traffic volume
Cactus/17	Approach	0	Poor	Medium	3.1	18.3	18.3	1.6	1.6	none	105	15	Concrete patch in good cond
Cactus/17	Depart	0	Poor	Medium	3.1	18.3	18.3	1.6	1.6	none	105	10	High traffic volume
Greenway/17	Approach	0	Good	Medium	0.0	1.6	4.6	0.0	0.7	none	105	15	High traffic volume
Greenway/17	Depart	0	Fair	Medium	1.0	1.6	12.2	0.0	3.1	none	115	15	High traffic volume
Peoria/17	Approach	0	Poor	Medum	1.0	2.2	4.6	0.0	0.0	none	100	10	Sealant is cracking into blocks
Peoria/17	Depart	0	Poor	Medum	1.6	0.0	4.6	0.7	0.7	none	105	10	Sealant is cracking into blocks

* No significant change in joint widths measured in summer and winter months

sealant specified for the transverse joint. Bridge plans call for hot poured sealant. These openings are a significant source of storm water infiltration below the slabs.

Irregular and rough slab edges point to installation problems. The fact that with the same sealant, some joints are in good condition while others experience adhesive failure also indicates inadequate joint preparation. Certain general installation procedures must be followed for all joint systems. The manufacturer's specific recommended procedures for each material shall be followed. Installation procedures are dealt with in Chapter IV on Solutions.

In cross slopes, it appears, for hot poured sealant, temperature of each pour has to be monitored with extreme care; the self leveling sealant flows along the slope resulting in less thickness at high point and more thickness at low point. This necessitates laps in the sealant. Due to temperature differential, there is loss of homogeneity between the layers and adherence is lessened. To circumvent this problem, installers have tried joint filler dams at intervals along the joint. However these fillers leave openings for infiltration. Both these solutions have produced ineffective seals.

In general, the materials in use by ADOT to seal the gap between the approach and anchor slabs may produce effective and long lasting seals. However, there is a large percentage of joints that do not perform well indicating the need to upgrade the material and /or to follow proper installation procedures. In most cases, the seals have some openings that allow infiltration of debris and water. Most frequently, the function of the joint is compromised by failure of the seal to adhere to concrete pavement, resulting in a thin opening between the slab edge and the sealant material.

CHAPTER IV

SOLUTIONS

Prior to addressing solutions for joints for ADOT's verification, certain general requirements for all joints are presented for efficient function of the joint. These include the installation procedures as well as the general roadway design requirements.

- Concrete shall cure for a minimum period of seven days prior to sealant or seal installation.
- Joint reservoirs shall be formed and constructed so they are uniform and consistent in width.
- The sealant or seal bonding faces of the joint (new and existing joints to be repaired) shall be refaced by diamond sawing, immediately flushed with high pressure water and then sand blasted (on same day of sealing) prior to seal installation. The field inspectors should verify joint cleanliness before installation.
- Sand blasting shall be performed in two passes, one for each joint face, with the nozzle directed at each face in the same direction for both passes.
- Just prior to joint installation, the joint shall be blown out in one direction only.
- The nozzle used to install sealant should be such that the sealant is filled from bottom to top.
- The temperature of hot poured sealant shall be monitored at all stages of installation.
- Material manufacturer's installation specifications shall be followed. If required by the manufacturer, the installer shall be certified by the manufacturer of the Material.
- Allow three days to elapse after joint installation, prior to any traffic. Protect the joints from long-term construction traffic etc.
- Continue pavement under barriers. Do not provide joints between pavement and barriers. Joint terminations are shown on Joint solution details.
- At retaining wing walls, seal the joints with the same or other suitable seal as the transverse joint. Again proper installation procedures shall be followed.
- Seal the joint at curb and gutter, do not allow storm water to infiltrate between them.

Based on the information gathered from the literature, the responses obtained from other DOTs and the field inspection and evaluation, solutions for five different joints are devised. One

is with hot poured sealant, one is with self leveling or toolable silicone sealant, one is with preformed membrane sealant, one is with elastomeric compression seal and the last one is with armored strip seal. All have the cellular plastic fill material below as in the ADOT joint. The polyurethane foam spacer shown in the ADOT joint is removed since it is incompressible. All have epoxy concrete header (nosing) for protection against spalling and for anchoring the armor of the strip seal. All except the silicone joint are adaptable to the existing joints. Joint width for silicone is restricted to maximum 50 mm. These solutions are shown in Figures 4 thru 8. Figure 9 shows the joint termination treatment at barriers. Figure 10 gives the Joint seal remediation steps for existing joints.

Measurements of joint widths were made in winter and summer months. No significant differences were found. Apparently the anchor slab accommodates most of the pavement expansion. Under these circumstances, a maximum joint width of 50 mm is recommended for new installations.

Base Specifications for the various new materials used in the above solutions are given below to aid the ADOT in procuring materials for installing the joints for verification and adaptation.

1. Epoxy Concrete for Header (Figures 4 thru 8): The coarse and fine aggregates for the concrete shall be per current ADOT standard specifications for Road and Bridge Construction. The mix design shall be as recommended by the manufacturer. The surface shall be primed with epoxy prior to applying the epoxy concrete. The epoxy shall conform to current ASTM C-881 and AASHTO M-235 specifications and shall be USDA approved. The viscosity shall be about 1400 cps; Pot life for 60 gram mass shall be 25 minutes. The bond strength (ASTM C-882) between hardened concretes shall be 7.58 MPa at 2 days dry cure and 11 MPa at 14 days moist cure.

2. Low Modulus Hot Poured Sealant (Figure 4): The sealant shall be a low modulus high quality single component, hot applied jet fuel resistant material intended for sealing joints in portland cement concrete pavements. It shall meet ASTM D3569 and Federal SS-S-1614A specifications.

3. Rapid Cure Silicone Joint Sealant (Figure 5): This shall be self-leveling, cold applied, rapid cure two part, ultra low modulus 100% silicone rubber sealant, intended for sealing expansion joints that experience both thermal and vertical movements due to traffic loading.

4. Backer Rod (Figure 5): The material shall be capable of holding the fluid sealant in place. It shall not bond to the sealant. It shall meet the requirements of the sealant manufacturer. It shall be a compressible type material, such as closed-cell, resilient foam or sponge rubber stock of vinyl, butyl or neoprene or expanded polyethylene or polyurethane. The diameter of the rod shall be at least 30% larger than the reservoir width.

5. Toolable or Non Self-Leveling Silicone Joint Sealant (Figure 5): This sealant shall be one part silicone material that readily extrudes over a wide temperature range. On curing it shall produce a durable, flexible, low modulus joint seal. Shall meet Federal specifications TT-S-001543A Class A.

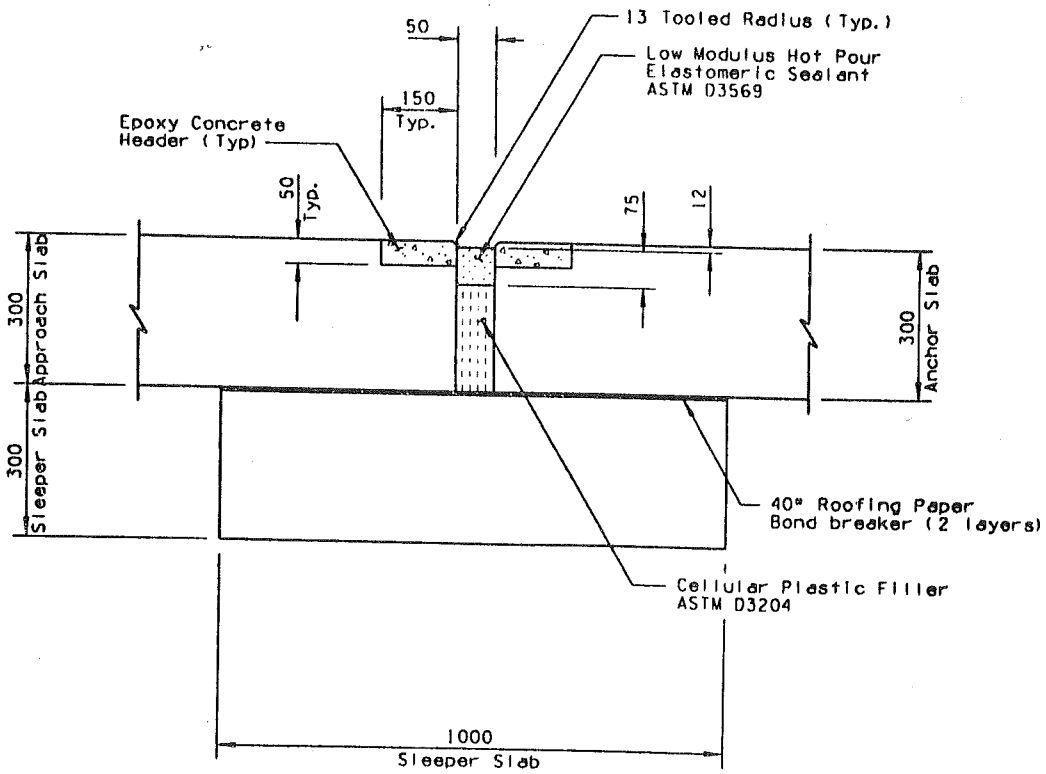

Figure 4. Low Modulus Hot Poured Sealant Joint

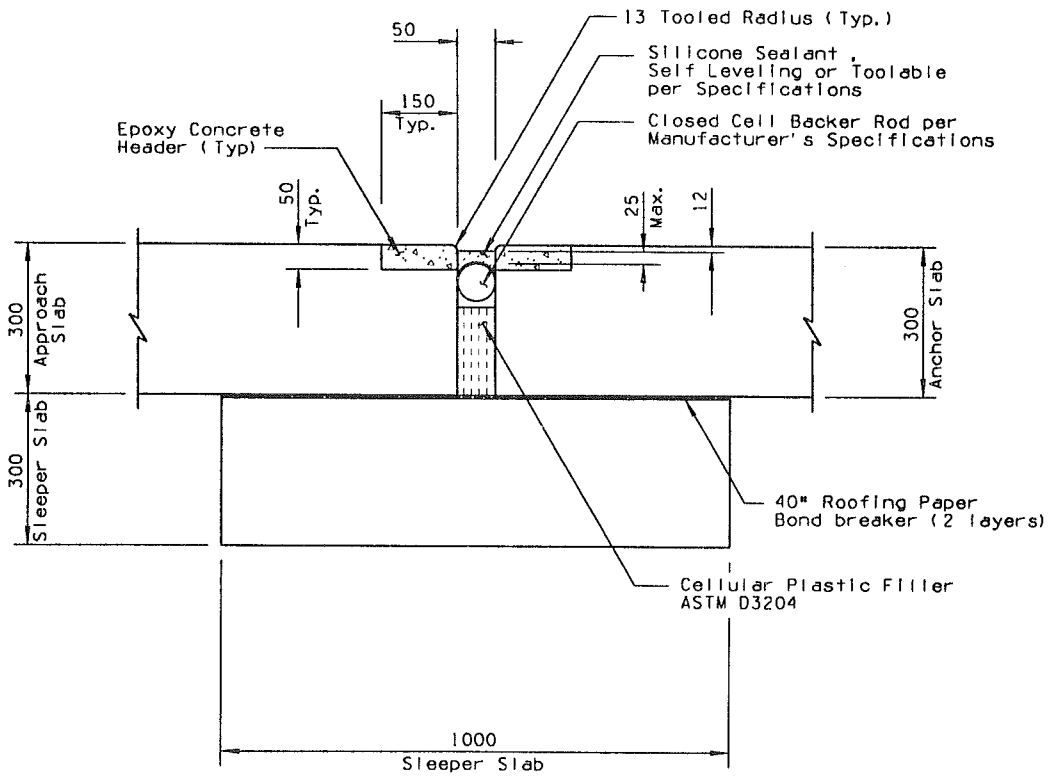

Figure 5. Silicone Sealant Joint

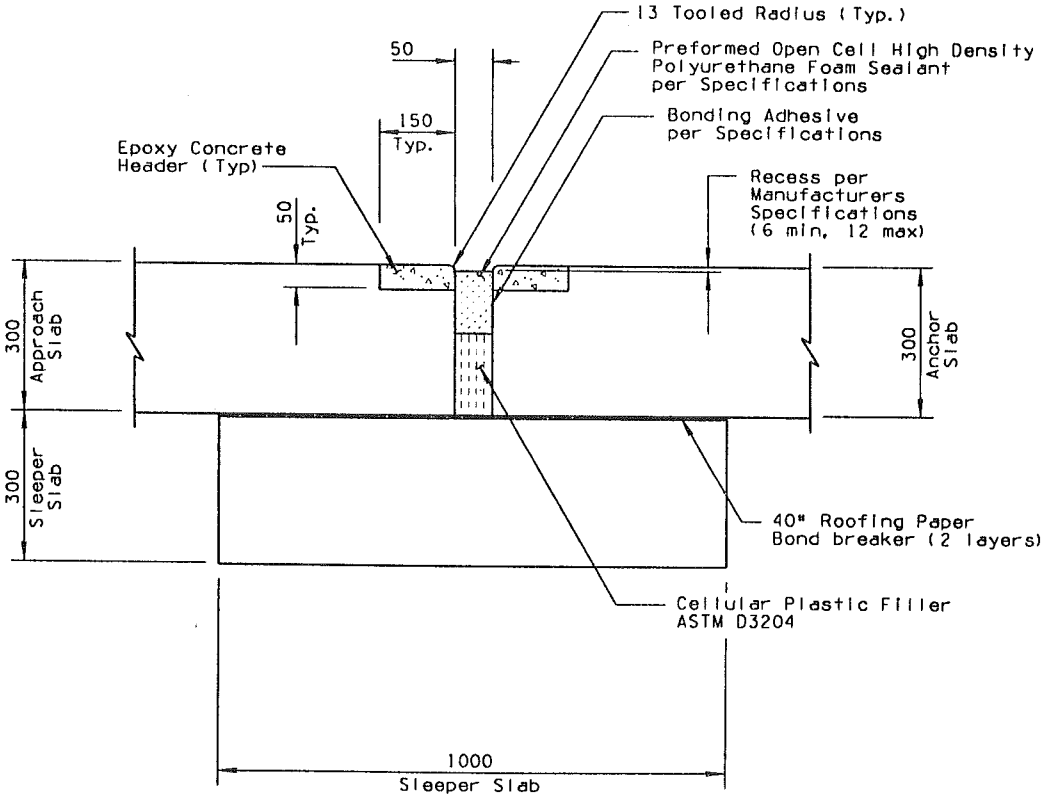

Figure 6. Precompressed Foam Joint

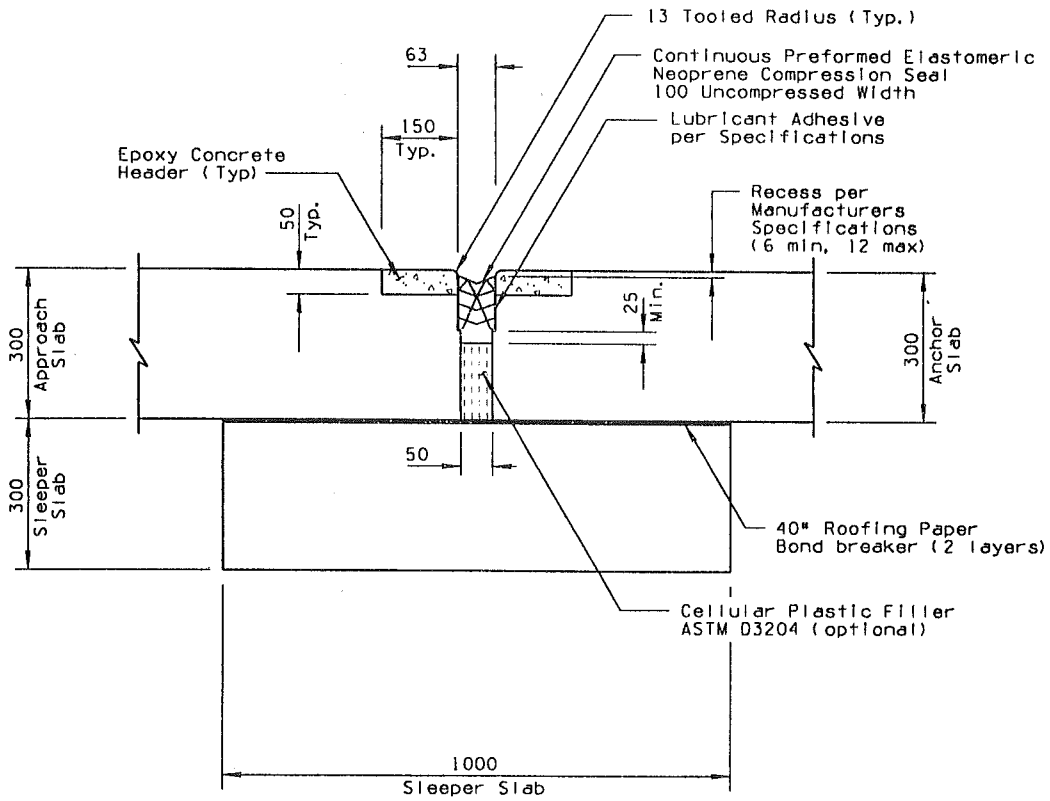

Figure 7. Compression Seal Joint

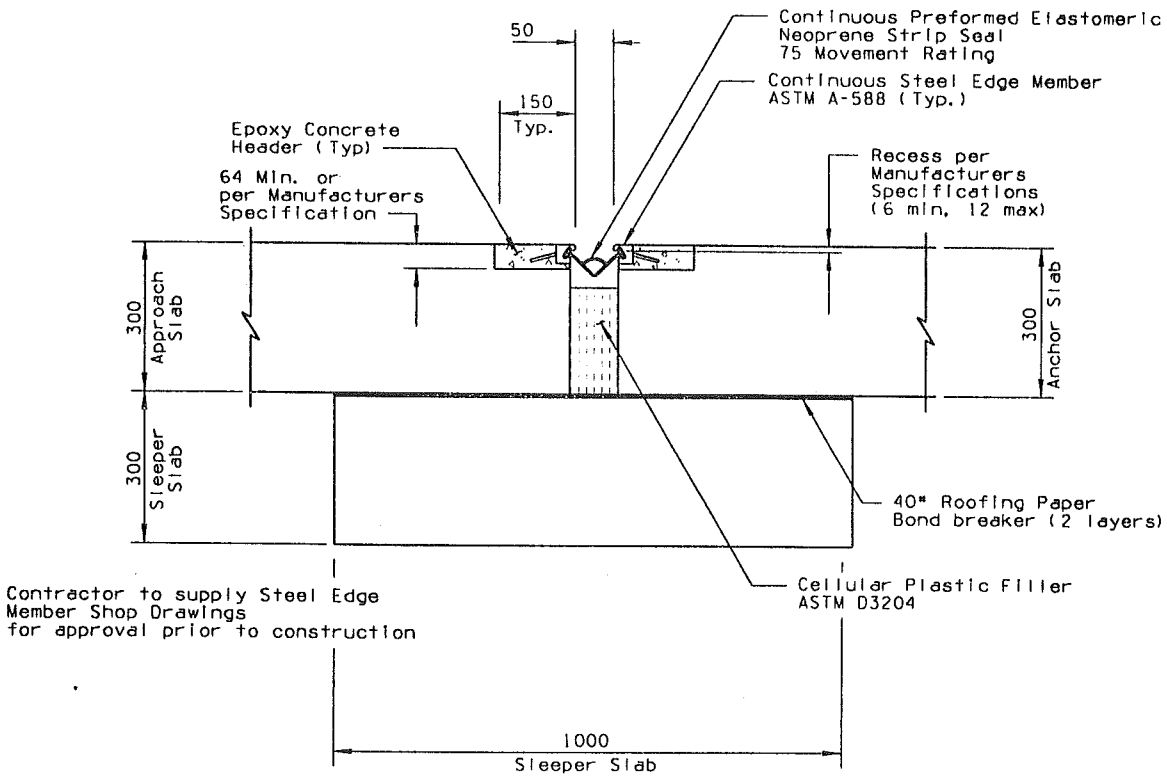

Figure 8. Armored Strip Seal Joint

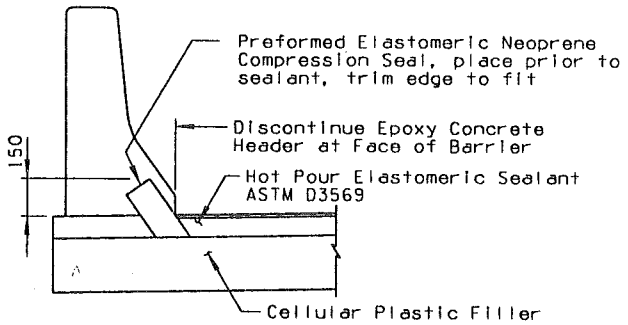

LOW MODULUS HOT POURED SEALANT JOINT

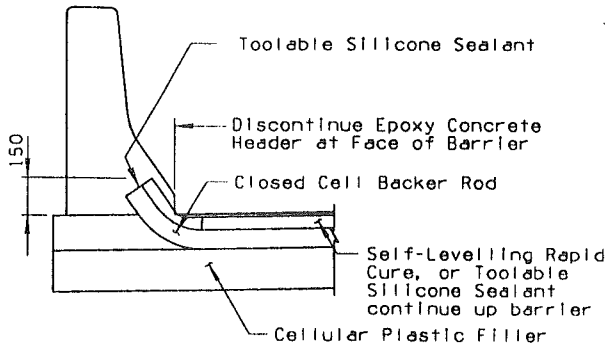

SILICONE SEALANT JOINT

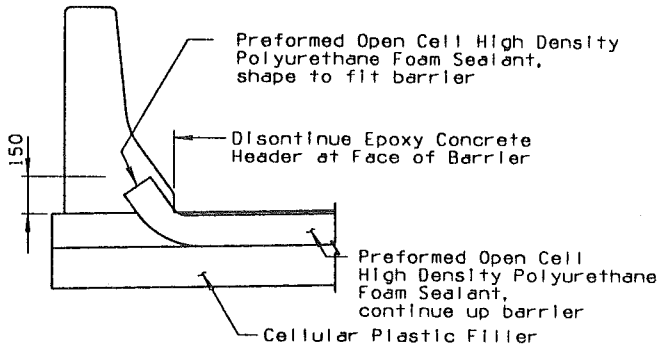

PRECOMPRESSED FOAM SEAL JOINT

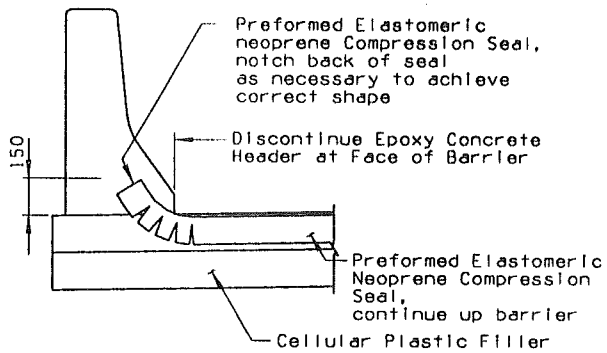

COMPRESSION SEAL JOINT

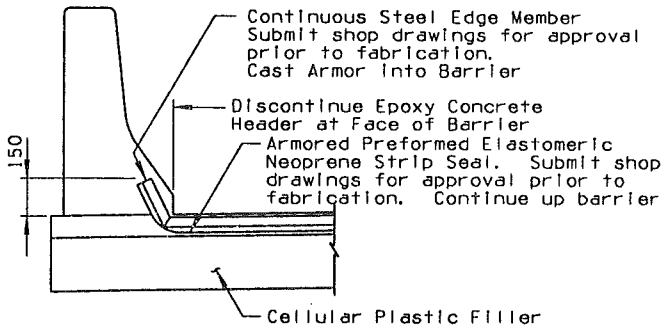

ARMORED STRIP SEAL JOINT

Figure 9. Terminal Treatment of Joints

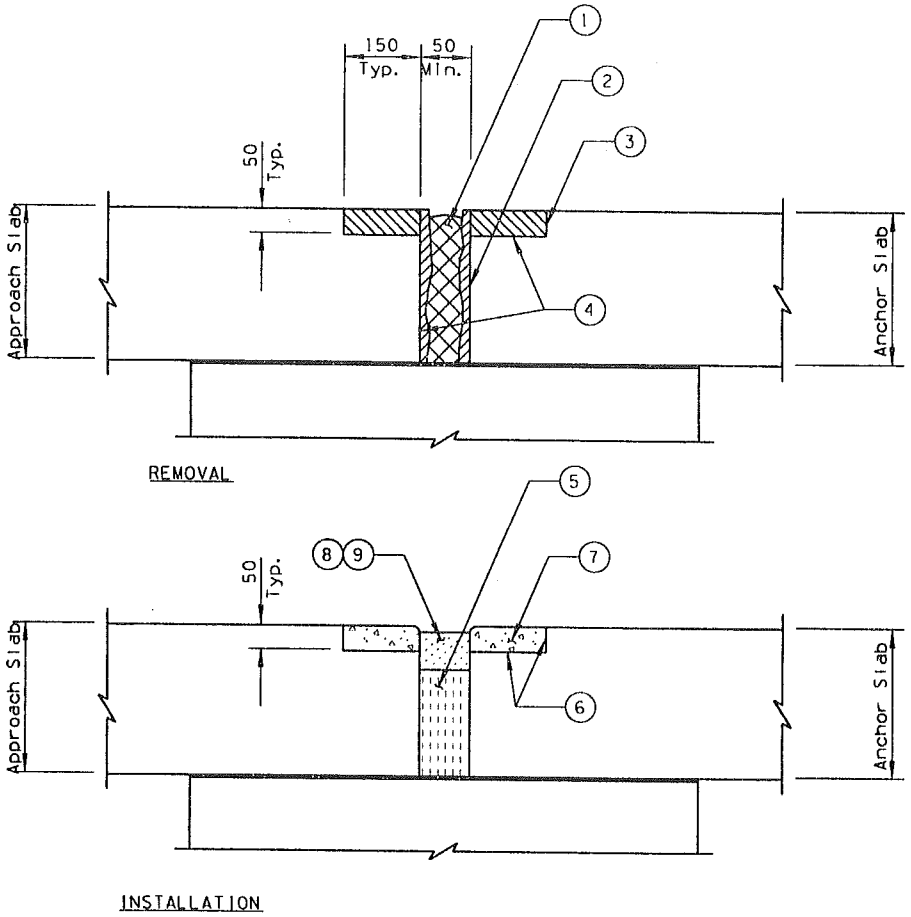

JOINT SEAL REMEDIATION FOR EXISTING JOINTS

1: Completely remove the existing joint seal material.
2: Saw cut the existing joint using a diamond blade saw. Saw the full depth of the slab to provide a clean, smooth, and true edge.
3: Saw cut and remove existing concrete to form the Epoxy Concrete Header Block Out
4: Sand blast the bond surfaces the same day as joint seal installation.
5: Install filler and Backer Materials.
6: Prime bonding surfaces.
7: Install Epoxy Concrete Header
8: Air Blast the joint to remove all debris, just prior to seal installation
9: Install the joint seal immediately after the header has set.
10: The joint systems shown in Figures 4 through 7 are adapatable for remediation. The Silicone Seal shown in Figure 5 cannot be used for joints with a finished opening greater than 50mm. The Strip Seal shown in Figure 8 is not recommended for seal remediation.

Figure 10. Joint Seal Remediation for Existing Joints

6. Continuous Preformed Elastomeric Neoprene Compression Seal (Figure 7): This shall be an extruded elastomeric material having a multi-channeled shape. The uncompressed width shall be greater than the reservoir width.

7. Bonding Adhesive for Compression Seal (Figure 7): The lubricant adhesive shall be a double component, epoxy based type, which is mixed at the job site. Its minimum tensile strength shall be 28.54 MPa and axial compressive strength 60.4 MPa. The initial cure time shall be 24 hours and complete curing time 7 days at 20°C.

8. Strip Seal (Figure 8): The expansion joint device shall be designed for HS-20 truck loading and impact in accordance with current AASHTO specifications and shall accommodate the movements indicated on the drawings. The strip seal made of polychloroprene gland shall be supplied and installed in one continuous length. The shape of the gland shall promote self-removal of foreign material during normal joint operation. Its minimum tensile strength shall be 13.79 MPa and elongation at break 250%. The TYPE A Durometer Hardness shall be 55± 5 points. The lubricant adhesive to bond the gland to the steel shall be one part moisture curing polyurethane and hydrocarbon solvent mixture meeting the requirements of ASTM D-4070-81.

9. Membrane Foam Sealant (Figure 6): The foam sealant shall consist of an open cell high density polyurethane foam impregnated with either a polymer modified bitumen or a neoprene rubber suspended in chlorinated hydrocarbons. The precompressed dimension shall not exceed 75% of the joint width. The sealant shall be UV and ozone resistant. Its tensile strength shall be minimum 144.8 KPa and ultimate elongation 150% minimum.

10. Bonding Adhesive (Figure 6): The adhesive shall be any waterproof epoxy adhesive that is compatible with concrete and recommended by the manufacturer of the foam sealant.

11. Splicing Adhesive (Figure 6): This may be any polyurethane adhesive recommended by the manufacturer of the foam sealant.

CHAPTER V

CONCLUSIONS

This chapter reiterates the need for the anchor slab and the pavement growth joint at the end of the bridge approach for portland cement plain concrete pavements. The importance of proper installation and implementation of the joint, the choice of the joint system and the external factors that impact the function of the joint cannot be overemphasized. To repeat the words of Martin Burke, Jr. (4), there is great growth potential for unrestrained rigid pavement and great pressure potential of restrained pavement. The pressure potential is accommodated by the anchor slab and the growth potential is taken care of by the approach/anchor slab joint. Provision for expansion and contraction and at the same time exclusion of water and debris are a must for the joint. In choosing the material for the seal or sealant, the joint movement (not the joint width) shall always be less than the strain limit of the seal. The strain limit shall be obtained from the manufacturer.

Spalling due to the vehicular traffic has been a problem reported in the literature; it has been verified in the inspections carried out in this investigation. Hence nosing or header material stronger than regular concrete shall be incorporated in all joints. Adhesive or debonding failure is attributable to some extent to the material property, but to no less extent to the preparation of slab edges. Cohesive failure is largely due to sun's ultra violet rays drying the petroleum base; but maintaining proper temperatures while pouring the sealant, especially in more than one layer at laps in cross slopes, is extremely important in the case of hot poured sealants. Materials with better resistance to UV rays (ASTM D 3569) shall replace the current sealants.

Based on these considerations, the five solutions outlined in Chapter IV are devised and presented for ADOT's verification and implementation. Joints at the longitudinal face of barriers shall be avoided by continuing the pavement under the barriers. At wing walls, the joints between the walls and the pavement shall be sealed the same way as the transverse joint and also maintained since the wall tends to drift away due to active pressure of soil. At curb and gutter, the joint between them shall be sealed to avoid storm water seeping under the approach and anchor slabs.

In Chapter II, summaries of responses from DOTs of other States were furnished. The conclusions drawn from them are presented here. About 20 States responded with information on the joint system used at bridge approaches. No State uses exclusively an anchor slab. Some States have reinforced transition pavements or a stretch of CRCP, which may be considered the equivalent of an anchor slab. Most States have the joint between the approach slab and the PCCP. Some States have more than one joint within the approach slab or within the allocated stretch of PCCP. No State is using exclusively hot poured sealant. Joints fall into two categories. One is the narrow joint with preformed filler, compression seal or armored strip seal or with silicone sealing compound or combination of preformed seal and hot poured sealant. The other is the wide strip joint wherein bituminous concrete or binder is used; this is referred to as pressure relief joint. Some States provide the joint only between the abutment backwall and the approach slab. The State of Maryland uses a stretch of bituminous concrete pavement from bridge abutment to the PCCP. Each State uses what is best in their evaluation or what works best for them. The majority of the States use silicone sealant and sleeper slab. Sleeper slabs are always used under pressure relief joints.

Acknowledgements

The Arizona Transportation Research Center guide lines were followed in the preparation of this report. Sundaram Engineering, Inc. wish to thank the support of the ADOT's Technical Advisory Committee constituted for the purpose of overseeing this investigation. The ADOT's construction and maintenance staff assisted the firm in the selection of bridges for inspection and arranged the inspections as well as traffic closures. The ADOT Bridge Management Team provided necessary help in preparing an inventory of the bridges with the joint under evaluation. The ATRC provided assistance in the literature survey. We are thankful for the DOTs of States who have taken time and interest to call us and respond to our request for their research work and standards. Crafco Inc. contributed their expertise in the sealants and the installation requirements. Stanley Consultants Inc., Phoenix is the subconsultant on the Project and Michael E. Dadik was assigned to work with Shan Sundaram of Sundaram Engineering, Inc. on this study.

REFERENCES

1. AASHTO Reference Book, 1994-1995

2. Harvey E. Wahls, North Carolina State University, North Carolina, " Design and Construction of Bridge Approaches, National Cooperative Highway Research Program, Synthesis of Highway Practice, Transportation Research Board, National Research Council, Washington D.C.

3. Mousse Issa etal, "On Site Evaluation of Bridge Deck Expansion Joints", Florida Department of Transportation, September 1996.

4. Martin Burke,Jr., "Bridge Approach Pavements, Integral Bridges and Cycle Control Joints", Transportation Research Record 1113.

5. W.R.Meir Jr., Edward J.Elnicky, Western Technologies Inc. " Construction Report for Arizona SHRP SPS-4 Experiment", ADOT Report No. AZ 92-377-1

6. Mushtaqur Rahman, Larry Scofield, "Performance Evaluation of Concrete Pavement Joint Sealants", Arizona Transportation Research Center, December 1990

APPENDICES

1 BRIDGE INVENTORY						
BRIDGE NUMBER	ROUTE		MILE POST		BRIDGE NAME	YEAR BUILT	INSPECTION PERFORMED
01956	10		142.65		27TH AVENUE OP EB	1986	
01957	10		142.65		27TH AVENUE OP WB	1986	
01938	10		142.83		NB&SB17-WB10 RAMP BR	1986	
01939	10		143.02		EB10-SB17 RAMP OP	1988	
01942	10		143.08		SB17-WB10 RAMP UP	1987	
01940	10		143.11		EB10-NB17 RAMP LVL 4	1988	
01941	10		143.14		NB17-WB10 RAMP LVL 2	1988	
01945	10		143.16		SB17-EB10 RAMP LVL 2	1990	
01946	10		143.21		WB10-SB17 RAMP LVL 4	1990	
01944	10		143.24		NB17-EB10-RAMP OP	1990	
01955	10		143.74		WB10 TO 19TH AV RAMP	1988	
01954	10		143.77		19TH AV TO EB10 RAMP	1988	
01960	10		144.72		HOV RAMP I-10 TO 5TH	1988	
01961	10		144.84		HOV RAMP 5TH TO 3RD	1988	
01966	10		145.45		HOV RAMP 3RD TO I-10	1988	
01998	10		147.15		HOV RAMP LVL 4	1987	
02126	10		147.21		EB10-NB51 RAMP LVL3	1990	
01973	10		147.22		EB10-EB202 RAMP LVL4	1987	
01974	10		147.24		WB202-WB10 RAMP LVL4	1987	
02127	10		147.25		SB51-EB202 RAMP LVL5	1990	
02122	10		147.25		WB202-EB10 N LVL2	1989	X
02128	10		147.25		WB202-EB10 S LVL2	1989	X
01976	10		147.25		SB51-EB10 RAMP LVL2	1987	
02124	10		147.26		SB51-WB10/EB202 RAMP	1990	
02125	10		147.26		SB51-WB10 RAMP	1990	
02123	10		147.26		EB10/WB202-NB51 RAMP	1989	
02116	10		147.27		WB10/SB51-EB202 RAMP	1989	
02115	10		147.77		WB202-EB10/NB51 RAMP	1989	
01978	10		147.92		VAN BUREN ST OP EB	1986	
01983	10		147.92		VAN BUREN ST OP WB	1986	
01979	10		148.13		WASH JEFF TI OP EB	1986	
01980	10		148.13		WASH JEFF TI OP WB	1986	
01988	10		148.40		SPRR ACCESS RD OP SB	1987	X
01989	10		148.40		SPRR ACCESS RD OP NB	1987	
01981	10		148.41		SPRR OP EB	1986	
01982	10		148.41		SPRR OP WB	1986	
01985	10		148.61		GRANT ST OP EB	1988	
01986	10		148.61		GRANT ST OP WB	1988	
01990	10		148.89		BUCKEYE RD OP EB	1988	
01991	10		148.90		BUCKEYE ROAD OP WB	1988	
02031	10		149.11		SKY HAR 22ND OP WB	1988	
02032	10		149.11		SKY HAR 22ND OP EB	1988	
01987	10		149.20		SKY HARBOR 24 TH OP	1986	
01992	10		149.30		MOHAVE ST OP EB	1988	
01993	10		149.30		MOHAVE ST OP WB	1988	
01996	10		149.47		SB17-EB10 RAMP LVL 2	1988	
01995	10		149.51		WB10 OVER SB17-WB10	1988	
01994	10		149.53		EB10 OVER SB17-WB10	1988	
01997	10		149.57		WB10-NB17 RAMP LVL 3	1987	
02003	10		150.72		SALT RIVER BRIDGE	1986	
02004	10		151.49		UNIVERSITY DR TI UP	1986	
02194	10		260.55		10TH AVE OP	1991	
02164	10		261.41		FRTGE RD SPRR OP WB	1991	
02196	10		261.41		LOOP RD/SPRR OP EBFR	1991	
02197	10		261.41		VETERANS SPRR OP	1991	
02018	10		265.02		ALVERNON WY TI OP EB	1986	
02045	10		304.91		OCOTILLO RD TI OP WB	1987	
02247	17		202.93		INDIAN SCHL RD TI UP	1992	
01440	17		208.25		ACDC BRIDGE	1988	
	17		209.00		PEORIA OP NB		X
	17		209.00		PEORIA OP SB		

BRIDGE INVENTORY					
BRIDGE NUMBER	ROUTE	MILE POST	BRIDGE NAME	YEAR BUILT	INSPECTION PERFORMED
	17	210.00	CACTUS ROAD OP NB		X
	17	210.00	CACTUS ROAD OP SB		
	17	211.00	THUNDERBIRD ROAD OP NB		
	17	211.00	THUNDERBIRD ROAD OP SB		
	17	212.00	GREENWAY ROAD OP NB		
	17	212.00	GREENWAY ROAD OP SB		
	17	213.00	BELL ROAD OP NB		X
	17	213.00	BELL ROAD OP SB		
02055	17	213.98	UNION HILLS DR TI OP	1989	
02076	40	198.28	BUTLER AVE TI OP EB	1988	
02077	40	198.28	BUTLER AVE TI OP WB	1988	
02414	51	0.52	MCDOWELL RD OP	1987	
02429	51	1.33	20TH STREET NB OP	1990	
02416	51	1.57	THOMAS RD TI OP	1989	
02417	51	1.66	20TH ST SB OP	1990	
02418	51	1.90	GRAND CANAL BRIDGE	1987	
02419	51	2.05	OSBORN ROAD OP	1986	
02420	51	2.57	INDIAN SCHL RD TI OP	1988	
02427	51	5.44	ARIZONA CANAL BRIDGE	1989	
02193	51	7.01	NORTHERN AVE TI OP	1993	
02223	51	9.48	SHEA BLVD TI UP	1996	
02350	60	172.37	PRIEST DRIVE OP EB	1995	
02112	60	177.09	MESA DRAIN RAMP B	1990	
02111	60	177.09	RAMP E-N BRIDGE	1993	
02113	60	177.45	DOBSON RD RAMP A BR	1994	
01927	60	189.39	SOSSAMAN ROAD TI UP	1990	X
02048	60	191.40	ELLSWORTH RD TI UP	1990	X
02063	60	192.38	CRISMON RD TI OP	1990	X
02064	60	193.38	SIGNAL BUTTE RD TIOP	1990	X
02065	60	195.39	IRONWOOD DR TI OP	1990	
02199	60	199.12	SIPHON DRAW BR EB	1991	X
02200	60	199.12	SIPHON DRAW BR WB	1991	X
02034	101 L	8.06	NORTHERN AVE TI OP	1987	
02035	101 L	9.27	OLIVE AVE TI OP	1987	
02036	101 L	10.28	PEORIA AVE TI OP	1987	
02039	101 L	12.65	THUNDERBIRD RD TI OP	1989	
02040	101 L	13.49	SKUNK CREEK BRIDGE	1989	X
02050	101 L	14.73	BELL ROAD TI OP	1990	X
02060	101 L	15.12	83RD AVENUE UP	1990	
02002	101 L	15.80	UNION HILLS DR TI UP	1990	
02051	101 L	17.24	75TH AVE TI UP	1990	
02052	101 L	18.24	67TH AVE TI UP	1990	
02053	101 L	19.18	59TH AVENUE TI UP	1990	X
02069	101 L	20.19	51ST AVENUE TI OP	1992	X
02070	101 L	22.19	35TH AVENUE TI OP	1992	X
02134	101 L	22.69	31ST AVENUE OP EB	1992	X
02135	101 L	22.69	31ST AVENUE OP WB	1992	X
02133	101 L	23.20	27TH AVE TI UP	1993	X
02132	101 L	23.70	23RD AVENUE UP	1991	
02249	101 L	43.06	VIA DE VENTURA TI OP	1991	
02250	101 L	44.46	INDIAN BEND RD TI OP	1991	
02251	101 L	45.14	ARIZONA CANAL BRIDGE	1996	
02252	101 L	45.51	MCDONALD DR TI OP	1991	
02255	101 L	48.03	THOMAS ROAD TI UP	1992	
02256	101 L	49.54	MCDOWELL ROAD TI OP	1993	
02257	101 L	50.03	MCKELLIPS RD TI OP	1992	
02358	101 L	51.00	RAMP N-W	1995	
02379	101 L	51.24	RAMP W-S OVER L202	1995	
02359	101 L	51.47	RAMP E/W-S	1995	
02357	101 L	51.55	RIO SALADO PKWY OP	1995	
02071	101 L	52.07	UNIVERSITY DR TI UP	1990	

BRIDGE INVENTORY

BRIDGE NUMBER	ROUTE	MILE POST	BRIDGE NAME	YEAR BUILT	INSPECTION PERFORMED
02041	101 L	52.27	VICTORY DRIVE UP	1988	
02042	101 L	52.60	APACHE BLVD UP	1988	
02073	101 L	53.07	BROADWAY RD TI UP	1990	
02074	101 L	54.07	SOUTHERN AVE TI UP	1990	X
02108	101 L	54.57	EFR OVER RAMP E-N	1994	
02103	101 L	54.57	SB 101 TO EB 60	1994	
02182	143	1.37	SALT RIVER BRIDGE	1990	
02183	143	1.73	SKY HARBOR TI OP	1990	
02241	143	2.07	GRAND CANAL SPRR OP	1990	
02240	143	2.40	WASHINGTON ST TI OP	1990	X
02155	143	2.65	VAN BUREN ST OP NB	1990	X
02154	143	2.65	VAN BUREN RAMP SB OP	1990	
02156	143	2.65	VAN BUREN ST OP SB	1990	
02157	143	2.65	VAN BUREN RAMP NW OP	1990	
02158	143	3.00	RAMP NW UP	1990	
02160	143	3.25	EAST PAPAGO TI UP EB	1990	
02161	143	3.25	EAST PAPAGP TI UP WB	1990	
02159	143	3.25	RAMP E-N @ E PAPAGO	1991	
02228	153	1.91	SALT RIVER BRIDGE NB	1996	X
02229	153	1.91	SALT RIVER BRIDGE SB	1996	
02231	153	2.37	WB SKY HARBOR OP NB	1996	
02232	153	2.38	WB SKY HARBOR OP SB	1996	
02237	153	2.38	EB SKY HARBOR OP	1991	
02230	153	2.42	RAMP E-S OP	1996	
02236	153	2.44	RAMP A OP	1996	
02233	153	2.45	EB SKY HARBOR OP NB	1996	
02234	153	2.46	EB SKY HARBOR OP SB	1996	
02239	153	2.50	RAMP B OVERPASS	1991	
02021	202 L	0.70	24TH ST TI OP	1987	
02022	202 L	1.75	32ND ST TI OP	1988	
02023	202 L	2.01	GRAND CANAL BRIDGE	1988	
02024	202 L	2.45	40TH STREET TI OP	1989	
02142	202 L	2.80	RAMP N/S-2 @ WB FRNT	1989	
02144	202 L	2.80	RAMP E-N/S @ EB FRNT	1989	
02140	202 L	2.90	44TH STREET TI OP	1989	
02141	202 L	2.90	RAMP N/S-W	1989	
02143	202 L	2.90	RAMP E/N-S	1990	
02198	202 L	3.45	48TH STREET OP EB	1990	
02327	202 L	3.45	48TH STREET OP WB	1990	
02208	202 L	3.89	RAMP B OP EB	1992	
02209	202 L	3.89	RAMP B OP WB	1992	X
02210	202 L	4.04	52ND STREET OP EB	1992	
02211	202 L	4.04	52ND STREET OP WB	1992	X
02217	202 L	4.83	SPRR/GRAND CNL BR EB	1991	
02218	202 L	4.83	SPRR/GRAND CNL BR WB	1991	X
02219	202 L	5.02	SKY HARBOR BLVD EBOP	1991	
02220	202 L	5.02	SKY HARBOR BLVD WBOP	1991	X
02221	202 L	5.48	SKY HARBOR BLVD EBOP	1991	
02258	202 L	6.34	MILL AVE VIADUCT	1993	
02227	202 L	6.45	CENTER PARKWAY TI UP	1993	
02259	202 L	7.13	W PEDESTIRAN OP EBWB	1993	
02260	202 L	7.41	E PEDESTRIAN OP EBWB	1993	
02261	202 L	7.55	COLLEGE AVENUE OP	1993	
02262	202 L	7.55	COLLEGE AVE RAMP AOP	1993	
02263	202 L	7.71	SCOTTSDALE RD TI OP	1994	
02265	202 L	8.06	INDIAN BEND WASH BR	1994	
02269	202 L	8.17	SALT RIVER BRIDGE WB	1994	
02268	202 L	8.17	SALT RIVER BRIDGE EB	1994	

2 Joint Systems And Materials in Market

• Chemcrete	Complete Joint
• Delcrete Elastomeric Concrete / Steelflex Strip Seal System (D.S.Brown)	Complete Joint
• Dow Corning 902 RCS Joint Sealant	
• XJS Expansion Joint System(Dow Corning/Silicone Specialties)	
• Ceva 250 Joint System (Epoxy Industries Inc.)	Complete Joint
• Ceva 300 Joint System (Epoxy Industries Inc.)	Complete Joint
• Evazote 380 ESP Sealant (Epoxy Industries Inc.)	
• Jeene Structural Sealing Joint System (PC35) Hydrozo/Jeene Inc.	Complete Joint
• Jeene Structural Sealing Joint System (PC 92M) Hydrozo/Jeene Inc.	Complete Joint
• Sylcrete ten minute Joint Sealant (Sylvex Corporation)	
• Resurf IV	Polymer Header
• Expandex Buried Joint System (Watson, Bowman and Acme Corporation)	Complete Joint
• Wabocrete ACM Expansion Joint (Watson, Bowman and Acme Corporation)	Complete Joint
• BJS Joint System (Linear Dynamics Corporation)	Complete Joint
• Flexcon 2000 Joint Sealing System (R.J.Watson Inc.)	Complete Joint
• Tech Star Elastomeric Strip Seal (Tech Star Inc.)	
• Sikaflex-15LM, Cold poured Low modulus one component Polyurethane based elastomeric self leveling sealant	
• Sikaflex 1CSL sealant	

leveling sealant

- Sikaflex 1CSL sealant
- Dow 888 Silicone Sealant
- Dow 890 Self Leveling Silicone Sealant
- Crafco Roadsaver SL Silicone Sealant

3 JOINTS OF OTHER DOTs

FHWA REGION NO.	STATE	PROJECT NO.	YEAR	SHEET NO.	TOTAL SHEETS
7	KANSAS		19..		

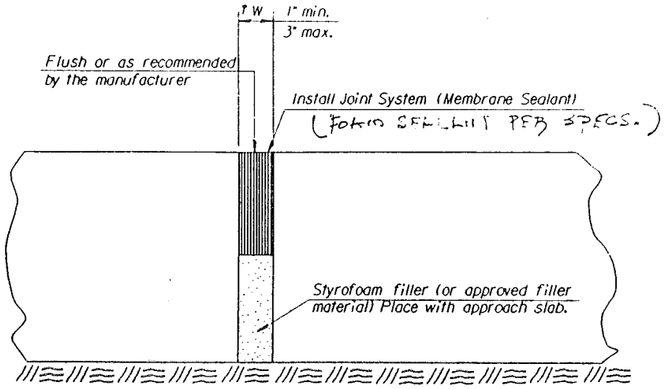

TYPE A

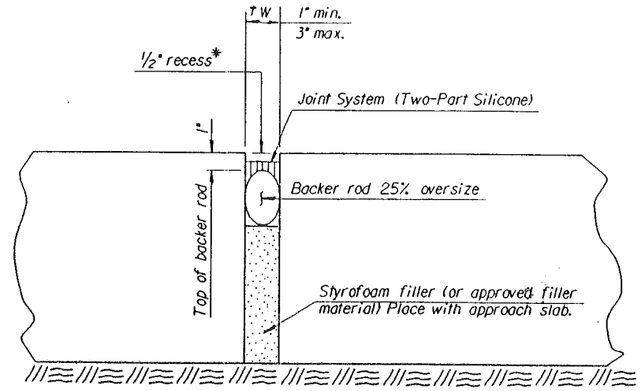

TYPE B

* Note: Joint shall be recessed 1/2" in areas subject to traffic. Joint shall be flush in shoulder areas. Maintain 1/2" depth of silicone joint sealant. Vary depth of backer rod.

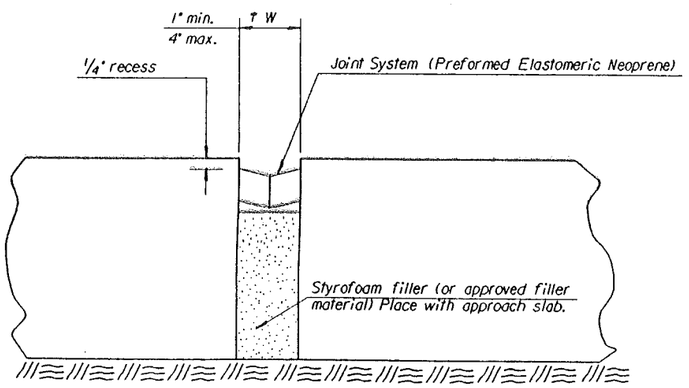

TYPE C

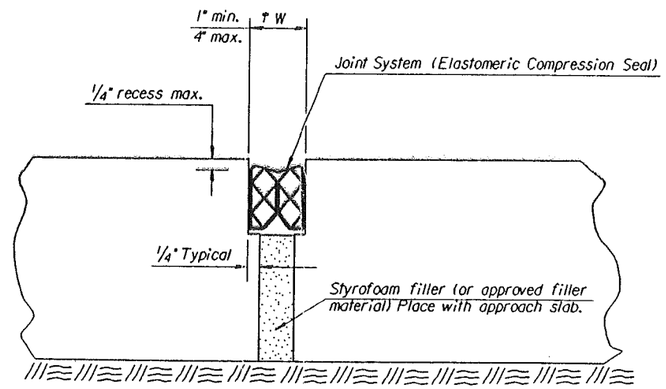

TYPE D

↑ W = INSTALLATION GAP

GENERAL NOTES

See Concrete Bridge Approach Pavement standard drawings for location and type of expansion joints.

The joint opening shall be formed just prior to placement of the pavement approach. The material used to form the joint opening shall be removed after the pavement approach has been in place for a minimum of six days.

Cleaning and construction of the joint shall not begin until the concrete in the approach slab has cured a minimum of 7 days.

The joint shall be thoroughly cleaned by sandblasting and by high pressure air blast to remove all laitance and contaminants from the joint. When any part of the joint is shaped by saw cutting in lieu of forming, a water blast shall preceed sandblasting and air cleaning.

Sandblasting shall be accomplished in two passes to clean each face of the joint (one pass for each face). The nozzle shall be held at an angle to the joint face and within 1 to 2 inches of the face.

Any contaminants such as oil, curing compound, etc. shall be removed by sandblasting to the satisfaction of the Engineer. Solvents, wire brushing, or grinding shall not be permitted.

The joint shall be air blasted just prior to installation of the backer rod. The air compressor used for joint cleaning shall be equipped with trap devices capable of providing moisture-free and oil-free air. Recommended pressure is 90 psi. Immediately prior to installation of the backer rod, the joint shall be spot checked by rubbing a finger on the face of the joint to determine that residual dust or dirt has been removed. It is required that the Engineer inspect the joint immediately prior to installation of the joint material.

Traffic shall not be allowed on the joint for a minimum of 3 hours unless otherwise directed by the Engineer.

All work and materials necessary for the preparation, construction, and installation of the joint will be subsidiary to the concrete approach pavement.

TYPE A

The joint shall be sealed with "Joint System (Membrane Sealant)" in accordance with the K.D.O.T. Specifications.

The seal shall be installed at locations shown on the plans and placed as one continuous unit. The seal shall be installed with the manufacturer's recommended bonder to the concrete pavement.

TYPE B

The joint shall be sealed with "Joint System (Two-Part Silicone)" in accordance with the K.D.O.T. Specifications.

The sealant shall be installed immediately after the backer rod is placed. The faces of the joint shall be completely free of any dampness or free water. Placement of the rod and sealant shall not begin when there is any expectation of rain or moisture occurring before the joint can be completed.

The sealant shall be installed to the depth shown in the details but shall not be greater than 1/2" deep at any location. The sealant shall be a silicone material Type II (Self Leveling).

Sealant shall not be installed when air temperature is less than 40° F or when air temperature is expected to be less than 40° F within 3 hours after installation is complete.

TYPE C

A joint will be provided as shown in the details. The seal will be recessed 1/4" below slab grade. The seal will be a "Joint System (Preformed Elastomeric Neoprene)". The seal shall be installed as per product specifications to provide a watertight joint throughout the roadway. See K.D.O.T. Specifications.

If the finished joint will be spliced, an epoxy adhesive shall be used to provide a watertight seal at the splice.

TYPE D

A joint will be provided as shown in the details. The seal will be recessed 1/4" below slab grade. The seal will be a "Joint System (Elastomeric Compression Seal)". The seal shall be installed as per product specifications to provide a watertight joint throughout the roadway. See K.D.O.T. Specifications.

If the finished joint will be spliced, an epoxy adhesive shall be used to provide a watertight seal at the splice.

NO.	DATE	REVISIONS	BY	APP'D
3				
2				
1	12-28-93	Add definition of "W"	R.J.S.	J.O.B.

KANSAS DEPARTMENT OF TRANSPORTATION

EXPANSION JOINT DETAILS
(BRIDGE APPROACH SLABS)

RD712

FHWA APPROVAL	2-10-94	APP'D James O. Brewer	
DESIGNED	DETAILED	QUANTITIES	TRACED
DESIGN CK.	DETAIL CK.	QUAN.CK.	TRACE CK.

Drawn By :road | Plotted :24-AUG-1995 15:55
File : /usr/road/us/rd712.dgn

BRIDGE DESIGN DATA SHEET

BDD 95-90

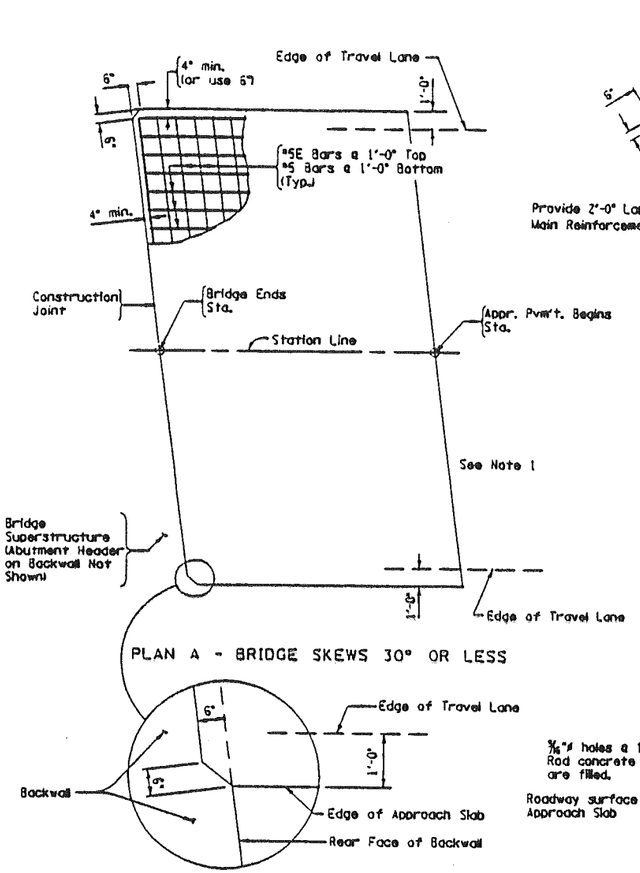

PLAN A - BRIDGE SKEWS 30° OR LESS

CORNER DETAIL
(BRIDGE SKEWS 30° OR LESS)
Scale : 1/4" = 1'-0"

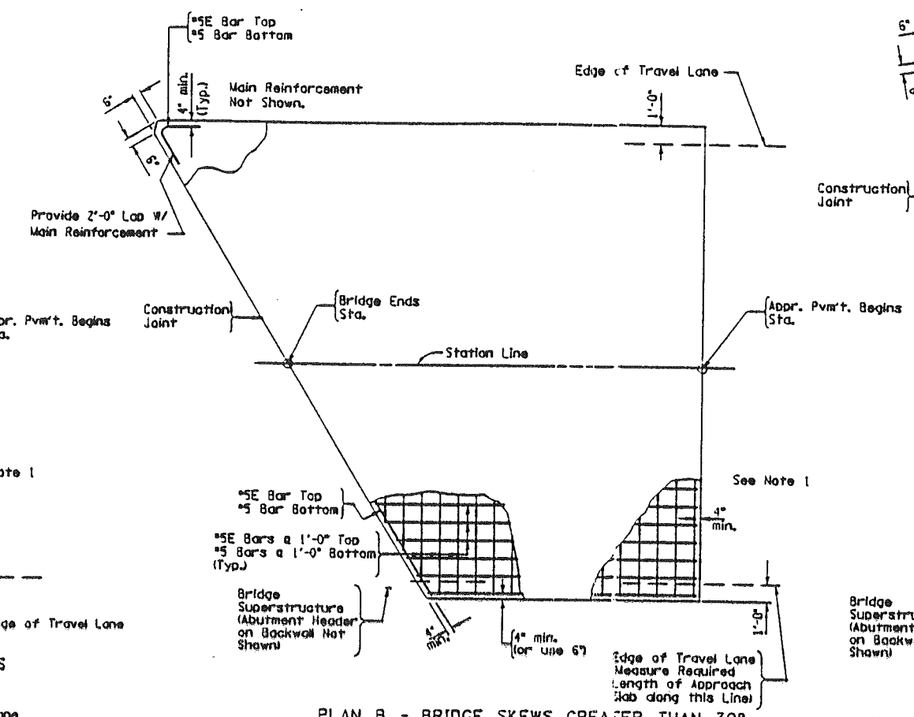

PLAN B - BRIDGE SKEWS GREATER THAN 30°

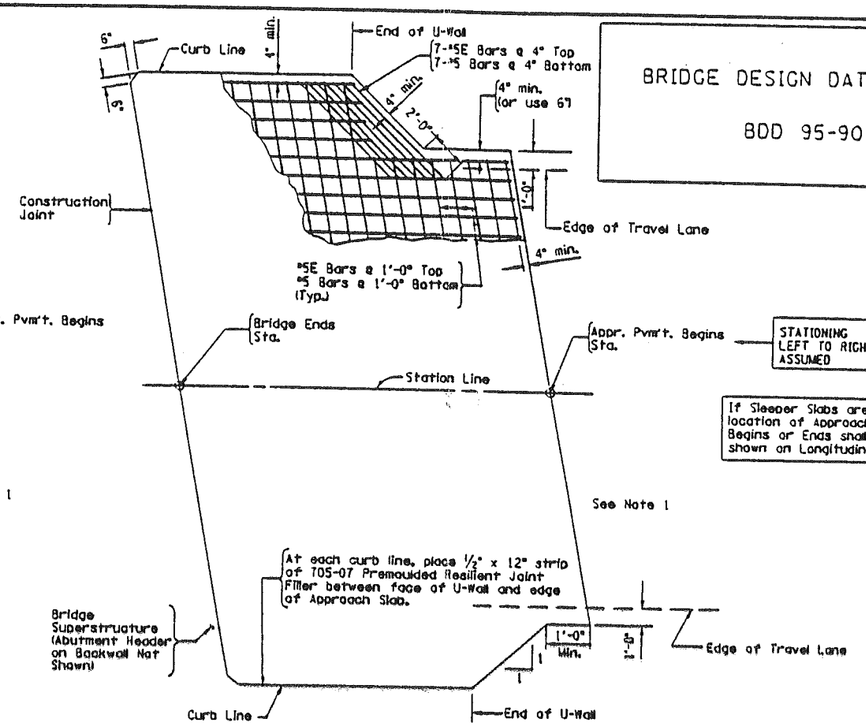

PLAN C - U-WALL ABUTMENT - SHOULDER WIDTH 5' OR LESS
(See Note 5)

STATIONING LEFT TO RIGHT ASSUMED

If Sleeper Slabs are required, location of Approach Pavement Begins or Ends shall be as shown on Longitudinal Section.

PLAN
Scale 1/4" = 1'-0"

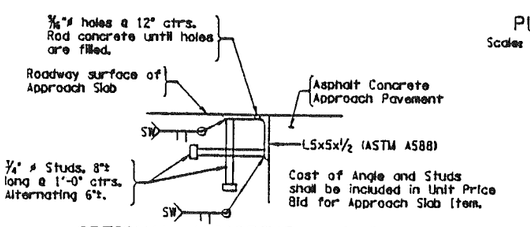

OPTIONAL ARMORING ANGLE
(USE ONLY IF REQUESTED BY REGIONAL OFFICE)
Scale 1 1/2" = 1'-0"

Note A:

Excavation for sleeper slabs shall be carefully made after compacted abutment embankment material is in place. The sleeper slabs are founded on undisturbed compacted material (or re-compacted material). No loose backfill will be allowed. The Contractor shall take all necessary precautions to protect the sleeper slab from temporary loadings or any condition which could cause movement or uneven settlement.

Note B:

Steel trowel finish top of sleeper slabs, and coat with a 30 mil nominal thickness of asphalt (702-0300, 702-0500 or 702-3101). Top of sleeper slabs to follow cross slope and grade of roadway. Cost to be included in the unit price bid for the Approach Slab Item.

NOTES TO DESIGNER:

1. Sleeper Slabs and Pressure Relief Joints, if required, are not shown in Plan views.
2. Approach Slabs and Sleeper Slabs shown on this sheet shall be paid for under the Concrete For Structures, Class E (Structural Approach Slab with Integral Wearing Surface) Item. The plan area of each Approach Slab and each Sleeper Slab shall be tabulated on the Contract Plans.
3. For additional information on types, uses, lengths, widths and skews of Approach Slabs, see Section 1 of the Standard Details For Highway Bridges.
4. Approach Slabs and Sleeper Slabs, including their Bar Reinforcement, shall be included in the Bridge Estimate.
5. U-Wall Abutment-Shoulder Width 5' or Less (Measured from Edge of Travel Lane to Curb Line; Detail shown is for Bridge Skews 30° or Less. If Bridge Skew is greater than 30°, extend Approach Slab to curb lines as shown in Plan C, and orient main reinforcement as shown in Plan B.
6. U-Wall Abutment-Shoulder Width Greater than 5'; Use Plan A or Plan B.
7. On Superelevated Bridge, with crown line at edge of travel lane, do not extend approach slab 1'-0" beyond crown line.
8. Exposed top surface of approach slabs shall be grooved under the Transverse Sawcut Grooving of Structural Slab Surface Item.
9. Eliminate Haunch if Approach Pavement Thickness equals or exceeds 1'-0". If Approach Pavement Thickness exceeds 1'-0", haunch Approach Slab down to Sleeper Slab.

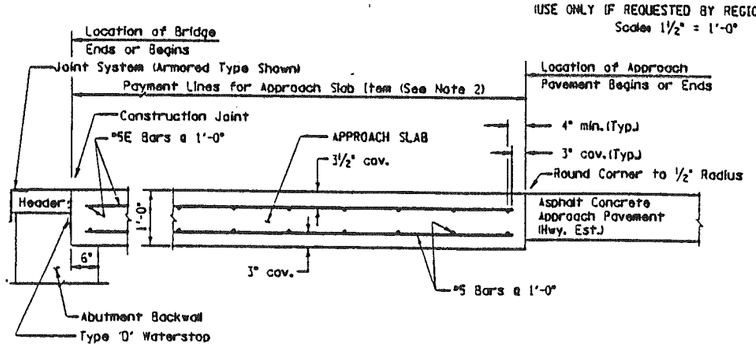

WITH ASPHALT CONCRETE APPROACH PAVEMENT

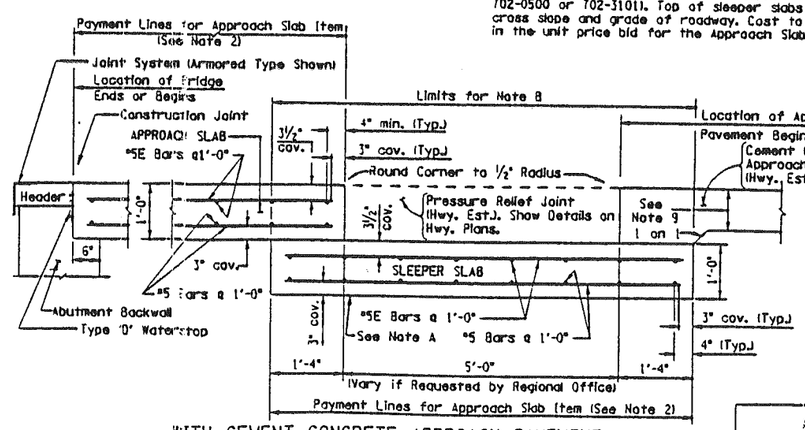

WITH CEMENT CONCRETE APPROACH PAVEMENT

LONGITUDINAL SECTION
Scale 1/4" = 1'-0"

NOTE: Dimensions shown for Sleeper Slab are perpendicular to its long axis.

APPROVED
DATE: 1/12/95
ORIGINAL SIGNED BY A.M. SHIROLE
DEPUTY CHIEF ENGINEER (STRUCTURES)

STATE OF NEW YORK
DEPARTMENT OF TRANSPORTATION
STRUCTURES DESIGN AND CONSTRUCTION DIVISION

REINFORCED CONCRETE APPROACH SLABS
FOR USE AT
CONVENTIONAL ABUTMENTS

PROJ. ENG.	DATE MADE
SQUAD	DRAWING NO. OF

DESIGNED BY
DETAILED BY
DESIGN CHECKED BY
DESIGN CHECKED BY

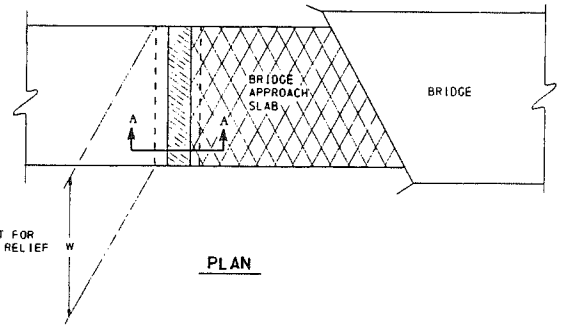

PLAN

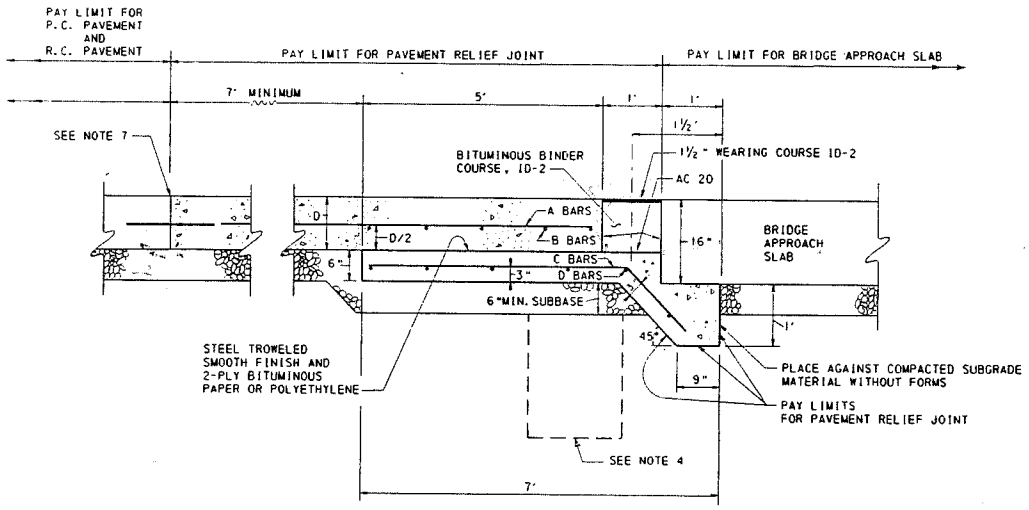

SECTION A-A

SCHEDULE OF REINFORCEMENT STEEL

MARK	SIZE	SPACING C - C	LENGTH	NUMBER REQUIRED
A	#4	12"	10'-6"	W
B	#4	12"	W minus 4"	5
C	#4	6"	6'-6"	W x 2
D	#4	12"	W minus 4"	7

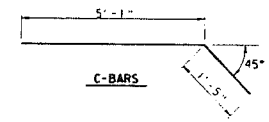

C-BARS

NOTES

1. PAVEMENT RELIEF JOINTS ARE APPLICABLE FOR ALL CEMENT CONCRETE PAVEMENTS.
2. CONCRETE IN SUBSLAB SHALL BE CLASS AA (AT CONTRACTORS OPTION, SUBSLAB CONCRETE MAY BE H.E.S.).
3. PORTIONS OF REINFORCING BARS WHICH ARE LOCATED OUTSIDE THE INDICATED PAY LINES SHALL BE INCLUDED IN BID PRICE FOR PAVEMENT RELIEF JOINT.
4. WHEN THE PAVEMENT GRADE CAUSES DRAINAGE TOWARDS THE BRIDGE, A SUBGRADE DRAIN (SEE RC-30) SHALL BE PLACED UNDER THE 6" PORTION OF THE SUBSLAB AND WILL BE MEASURED AND PAID FOR AS SPECIFIED IN SECTION 612, PUBLICATION 408.
5. WHERE BRIDGES ARE LOCATED LESS THAN 1,000 FT. APART, AS MEASURED FROM THE FACE OF THE NEAREST ABUTMENTS, NO RELIEF JOINT WILL BE USED BETWEEN THE BRIDGES.
6. WHERE BRIDGES ARE LOCATED BETWEEN 1,000 FT. AND 1,500 FT. APART, AND THE PAVEMENT STRUCTURE IS CEMENT CONCRETE, ONE RELIEF JOINT SHALL BE PLACED MIDWAY BETWEEN THE BRIDGES. IN THESE CASES, THE SUBSLAB SHALL BE A UNIFORM 6 IN. THICK AND 7 FT. WIDE.
7. FOR JOINT DETAILS ON NEW CONSTRUCTION, SEE RC-20. FOR JOINT DETAILS ON RECONSTRUCTION, SEE RC-26. IF THE DISTANCE TO THE NEAREST JOINT IS LESS THAN 10', REMOVE THE EXISTING PAVEMENT TO THE JOINT.

COMMONWEALTH OF PENNSYLVANIA
DEPARTMENT OF TRANSPORTATION
BUREAU OF DESIGN

PAVEMENT RELIEF JOINT

RECOMMENDED MAR. 25, 1994	RECOMMENDED MAR. 25, 1994	SHT. 1 OF 1
DIRECTOR, BUREAU OF DESIGN	CHIEF ENGINEER	RC-24

A9

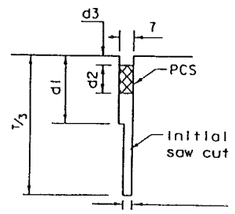

SAWED
LONGITUDINAL JOINT

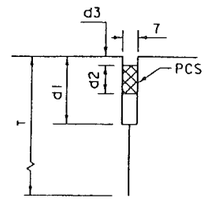

LONGITUDINAL
CONSTRUCTION JOINT

LONGITUDINAL JOINT SEALS

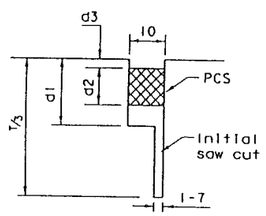

SAWED
CONTRACTION JOINT

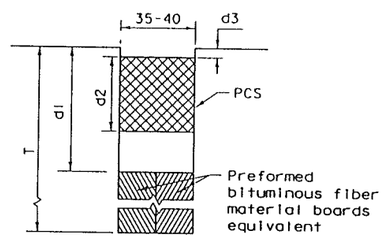

FORMED
FORMED EXPANSION JOINT

TRANSVERSE JOINT SEALS

METHOD A: PREFORMED COMPRESSION SEALS (PCS)
(CLASS 6 PREFORMED JOINT SEALANT)

GENERAL NOTES FOR METHOD "A"

1. Unless otherwise shown in the plans, either method "A" or method "B" may be used.
2. The location of joints shall be as shown elsewhere in the plans.
3. Dimension d1, d2, and d3 shall be in accordance with the preformed compression seal manufacturers recommendation.
4. The joint reservoir for sealant shall be sawed unless otherwise shown on the plans for the longitudinal and transverse construction and the two sawed joints.
5. The joints shall be cleaned in accordance with the specification item for "Cleaning and / or Sealing Joints and Cracks (Portland Cement Concrete)". Prior to begining operations, the Contractor shall submit a statement from the sealant manufacturer showing the recommended equipment and installation procedures to be used.
6. The saw cut for the longitudinal joint may be one fourth the slab thickness when crushed limestone is used as the coarse aggregate.

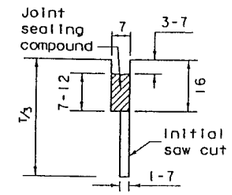

SAWED
LONGITUDINAL JOINT

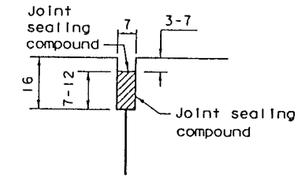

LONGITUDINAL OR TRANSVERSE
CONSTRUCTION JOINT

LONGITUDINAL JOINT SEAL

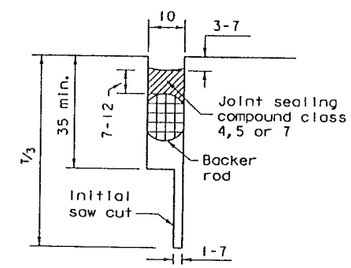

TRANSVERSE SAWED
CONTRACTION JOINT

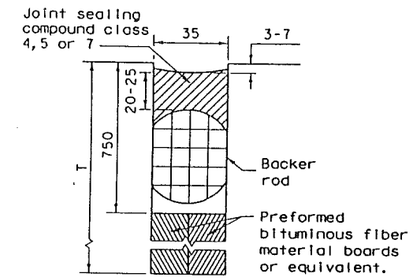

TRANSVERSE FORMED
EXPANSION JOINT

METHOD B: JOINT SEALING COMPOUND

GENERAL NOTES FOR METHOD "B"

1. Unless otherwise shown in the plans, either method "A" or method "B" may be used.
2. The location of joints shall be as shown elsewhere in the plans.
3. The Engineer shall select a target placement thickness for the sealant details which show ranges in thickness. The target thickness will normally be the mid point of the range.
4. The joint reservoir for sealant shall be sawed unless otherwise shown on the plans for the longitudinal and transverse construction and the two sawed joints.
5. The joints shall be cleaned in accordance with the item 438 and prior to begining operations, the Contractor shall submit a statement from the sealant manufacturer showing the showing the recommended equipment and installation procedures to be used.
6. The saw cut for the lonitudinal joint may be one fourth the slab thickness when crushed limestone is used as the coarse aggregate.

R = Radius
D = Diameter

All unit-less dimensions are millimeters

DISCLAIMER:
The use of this standard is governed by the "Texas Engineering Practice Act". No warranty of any kind is made by TxDOT for any purpose whatsoever. TxDOT assumes no responsibility for the conversion of this standard to other formats or for incorrect results or damages resulting from its use.

LEVELS DISPLAYED

Texas Department of Transportation
Design Division (Pavement)

CONCRETE PAVING DETAILS
JOINT SEALS

JS-95 (M)

FILE: JS95V.DGN	DN: LJB	CK: LJB	DW: BGD	CK:	NEG:	
ORIG DATE: JULY 1994	DIST	FED REG	FEDERAL AID PROJECT			SHEET
REVISIONS		6				
	COUNTY			CONTROL - SECT	JOB	HIGHWAY

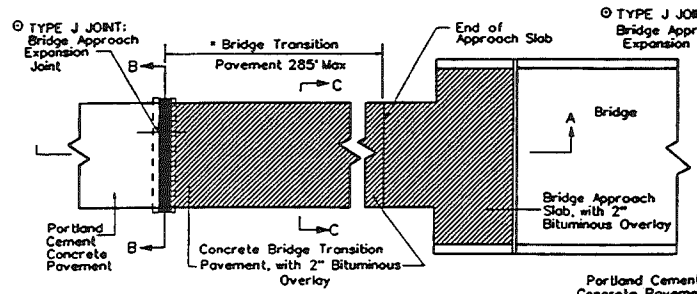

PLAN
(Bridge Skew 15° or less)

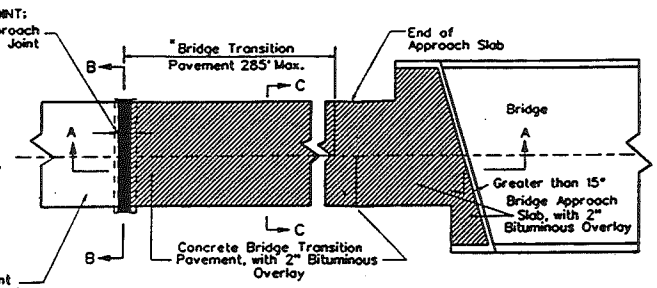

PLAN
(Bridge Skew Greater Than 15°)

2" Hot-Laid Bituminous Concrete Skid Resistant Overlay

Hot-Laid Bituminous Concrete Course (Base 2, Wearing, or Skid Resistant Course)

* Bridge Transition Pavement shall be Portland Cement Concrete Pavement having transverse, unsealed contraction joints, as detailed herein, at a maximum spacing of 15', unless otherwise designated on the Plans or specified.

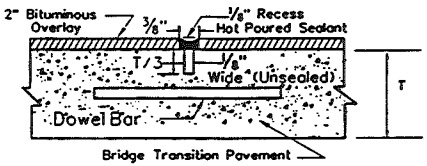

BRIDGE TRANSITION PAVEMENT CONTRACTION JOINTS

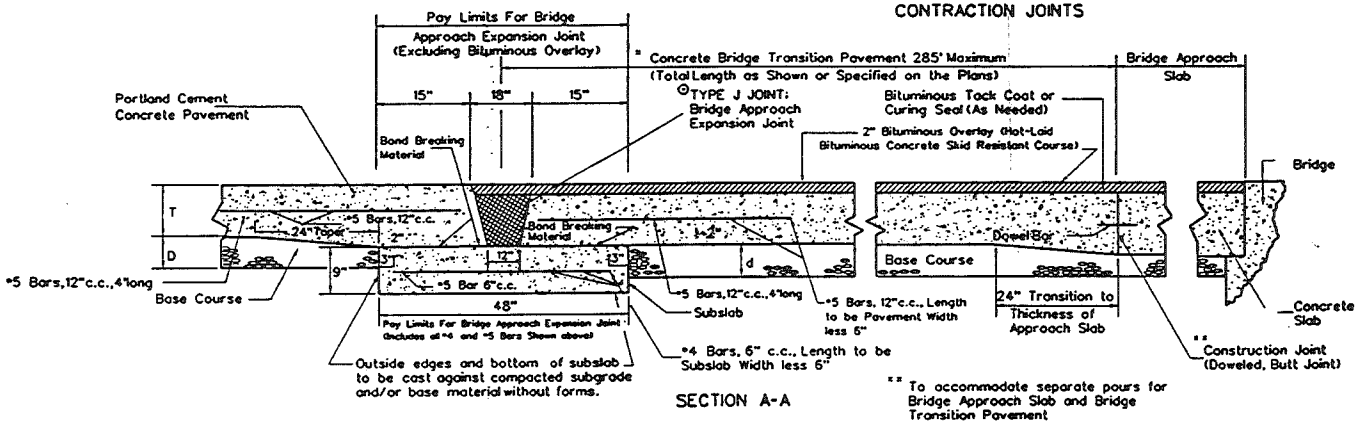

SECTION A-A

** To accommodate separate pours for Bridge Approach Slab and Bridge Transition Pavement

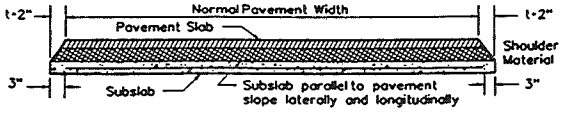

t" is equal to pavement thickness

SECTION B-B

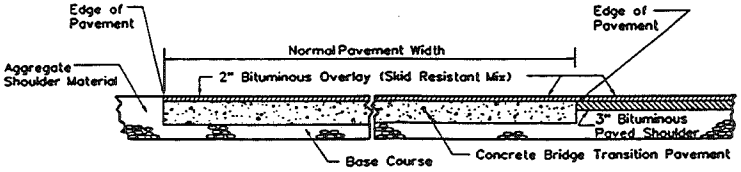

BRIDGE TRANSITION PAVEMENT AND SHOULDER DETAILS (For Untreated Aggregate Shoulders)

BRIDGE TRANSITION PAVEMENT AND SHOULDER DETAILS (For Bituminous Paved Shoulders)

SECTION C-C

NOTES

Material and Construction for hot-laid bituminous concrete course (bridge approach expansion joint filler) shall be in accordance with 401 or 402 of the Specifications, as applicable. Materials and construction for the 2" hot-laid bituminous concrete skid resistant overlay shall be in accordance with 402 of the Specifications.

Concrete in subslab shall be Class B or pavement concrete, meeting the requirements of 601 or 501, respectively, of the Specifications.

Bond-breaking material between concrete subslab and pavement may be bituminous material meeting the requirements of 705 or 706 of the Specifications, polyethylene sheeting, asphalt roofing paper, or other acceptable material, which will not be detrimental to the concrete.

Reinforcing steel shall be new billet steel of the size and length shown and shall conform to the requirements of 709.1 of the Specifications.

The cost of the completed four-foot wide joint: including the bitu-minous expansion joint filler, the 1'-3" wide strip of concrete pavement, the 1'-3" wide strip of concrete bridge transition pavement, the concrete subslab and additional excavation therefor, all reinforcing steel, and the bond breaking material between pavement and subslab: shall be included in the unit price bid for the bridge approach expansion joint.

Concrete bridge transition pavement shall meet the requirements for concrete pavement in 501 of the Specifications, except final finish (fine texturing) requirements are waived, pavement contraction and longitudinal joints need not be sealed, and bituminous (tack coat) curing seal conforming to 408 of the Specifications, shall be used between the transition pavement and the bituminous overlay in lieu of any other concrete pavement curing material except as permitted hereinafter. If deemed necessary by the Engineer, an additional tack coat may be required just prior to placement of the bituminous overlay. Other pavement curing materials and methods: e.g., wet curing methods, resin-base curing compound having self-removal properties (disappears following curing), etc.: which would be compatible with the pavement and overlay and which would not interfere with the bond between the two surfaces, may be used in place of the bituminous curing seal: however, a bituminous tack coat would then be necessary just prior to placement of the bituminous overlay. Transition pavement, along with the bituminous curing seal and/or tack coat as needed, shall be paid for as portland cement concrete pavement, except for the 1'-3" wide strip included in the cost of the bridge approach expansion joint.

The 2" overlay shall be measured and paid for as Item 402-2, Hot-Laid Bituminous Concrete Skid Resistant Pavement", per square yard Or item 402-1, " Hot-Laid Bituminous Concrete Skid Resistant Pavement", per ton.

The 2" overlay shall be sawed at the same location of the contraction joints in the concrete pavement. The joint shall then be filled with hot-poured elastic type joint sealer meeting the requirements of AASHTO M173. The cost of sawing and sealing the overlay joint will not be paid for separately, but shall be included in the cost of the overlay.

Requirements for bridge approach slabs shall be as detailed and specified elsewhere in the Contract and will be paid for as "Portland Cement Concrete Approach Slab".

Details and requirements for bridge approach expansion joints used in conjunction with concrete medians, concrete shoulders and concrete curbs and gutters are located on Standard Sheet PVT5 (Sheet 2 of 2).

To provide adequate drainage and prevent entrapment of water in the base course at the concrete subslab, adequate cross drainage installation: e.g., filter fabric underdrains: shall be provided on the upgrade end of the subslab as shown elsewhere on the Plans or directed by the Engineer.

WEST VIRGINIA DEPARTMENT OF TRANSPORTATION
DIVISION OF HIGHWAYS
STANDARD DETAIL

PREPARED 1-1-93
REVISION DATE

BRIDGE APPROACH EXPANSION JOINT; BRIDGE TRANSITION PAVEMENT WITH SKID RESISTANT OVERLAY, TYPE J JOINT
(sheet 1 of 2)

STANDARD SHEET PVT5

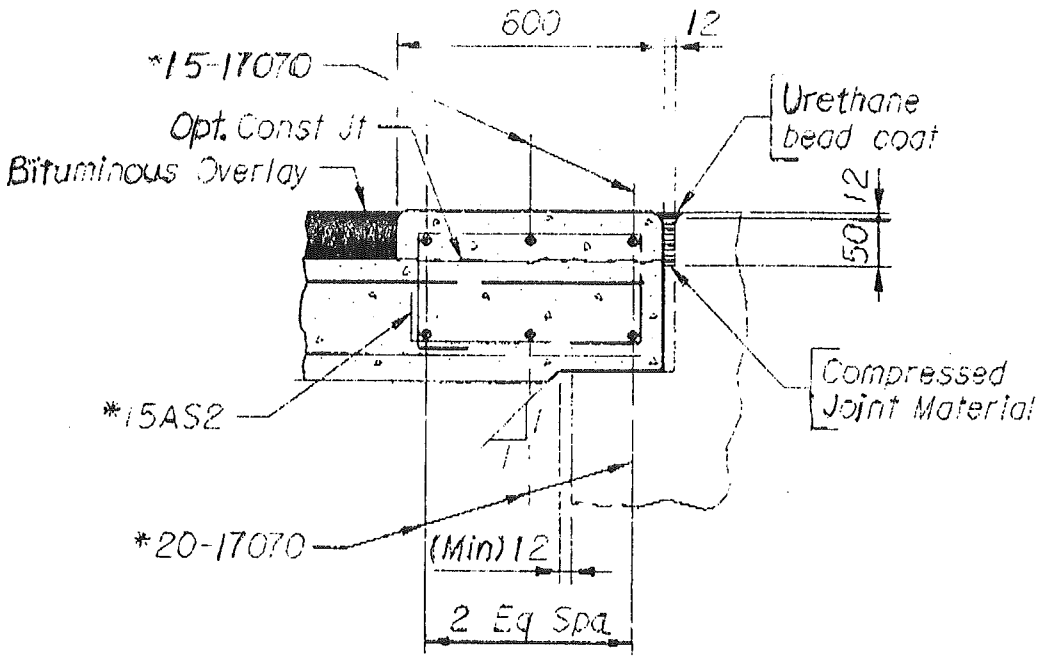

SECTION THRU JOINT BETWEEN ABUTMENT AND APPROACH SLAB
(Dimensions measured normal to Abutment)

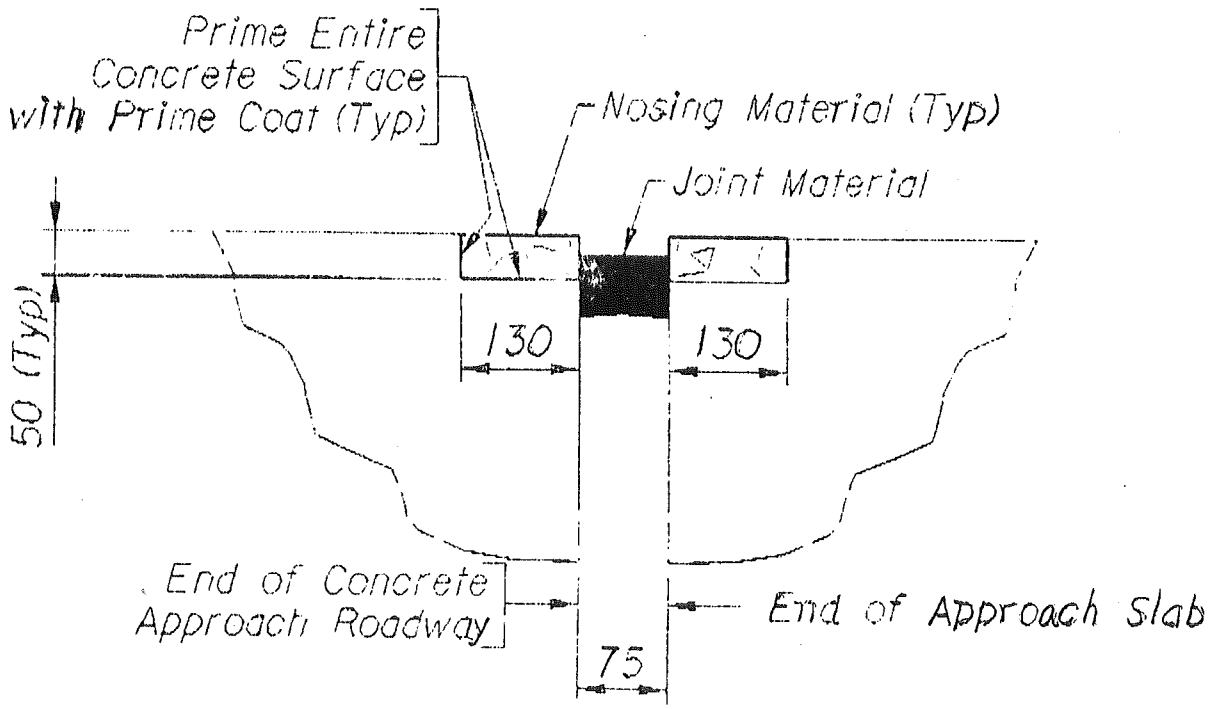

SECTION THRU JOINT BETWEEN APPROACH SLAB AND ROADWAY
(Expansion Joint with Nosing)

WYOMING DOT

(See the reverse side for instructions and definitions.)

Project Title: BRIDGE APPROACH/ANCHOR SLAB JOINT EVALUATION

Work Plan Administrator: _____ Date: July 21, 1997

Preparations:

1. Have you requested a literature search from ATRC on the problem(s)?
   - ☐ Yes, proceed to the next question.
   - ☐ No. **STOP**. Contact ATRC Library at 831-0624 to conduct a literature search.

2. Have you conducted or requested ATRC to conduct a search for products/techniques that can achieve the same objectives?
   - ☐ Yes, proceed to the next question.
   - ☐ No. **STOP**. Contact ATRC/PRIDE program (831-5790) to conduct a product search.

Evaluation Work Plan:

1. Problem Statement: (Attach additional sheets when needed.)

SEE ATTACHED SHEETS (Pages A17-A18)

2. Project Objectives: (Attach additional sheets when needed.)

The work plan or the project objective is to test the solutions devised under the bridge approach/anchor slab joint study. These are presented in section 4 of this work plan. Experimental installation and verification or testing of these solutions will provide knowledge in the installation techniques, behavior of the materials, give a comparison of the different joint systems and to select the best system or systems for adoption by ADOT.

3. Implementation: (Attach additional sheets when needed.)

ADOT will implement the verification program of the suggested solutions, through the Construction Group, Materials testing Group and the Maintenance Group. Construction will provide the PCCP (a four lane width is recommended), approach slab, anchor slab, sleeper slab, nosing, the joint space, concrete barriers, preparation of slab edges and joint seal installation including the terminal treatment at barriers. Materials testing will take care of all the field measurements, field testing and laboratory testing for a period of five years, commencing with the installation. Maintenance division will monitor the material and the function of the joint throughout the test period.

4. Product/Technique Selection: (Attach additional sheets when needed.)

SEE ATTACHED SHEET (page A18)

Seal and Sign

(See the reverse side for instructions and definitions.)

5. Site Selection: (Attach additional sheets when needed.)

Field testing and monitoring of the joints are required at the test site. The site shall have the following minimum characteristics.

- shall be suitable or shall be prepared for Portland Cement Concrete Pavement.
- shall be unshaded and shall have normal exposure to sunlight.
- shall be subject to a minimum temperature range of 10°C to 45° C
- shall be subject to a high traffic volume, 1600 vehicles /hour/ lane

6. Engineering Design: (Attach additional sheets when needed.)

The material selection criteria under section 4 above shall apply here also. ADOT's design parameters and specifications for construction shall be followed. Sealant's and seal's Manufacturer's recommendations regarding shape factors and other requirements have to be considered and discussed with them prior to joint installation.

7. Test Section Layout and Experimental Design: (Attach additional sheets when needed.)

SEE ATTACHED SHEETS (pages A18-A20)

8. Field Installation and Removal: (Attach additional sheets when needed.)

SEE ATTACHED SHEET (pages A21- A22)

Seal and Sign

(See the reverse side for instructions and definitions.)

9. Laboratory Testing Required: (Attach additional sheets when needed.)

The materials used in the five solutions proposed for the verification program and the minimum tests required are listed below. The manufacturer shall be asked to furnish their own test certifications for review for conformance to specifications.

Material	Test
Epoxy Concrete	Bond Strength per ASTM C 882
Epoxy	Viscosity Test
Compression Seal Bonding Adhesive	Tensile and Compressive Strengths
Strip Seal	Tensile Strength Elongation Type A Durometer Hardness
Membrane Foam Sealant	UV Resistance Ozone Resistance Tensile Strength Elongation

10. Evaluation Criteria: (Attach additional sheets when needed.)

For the explicit evaluation, the evaluation items listed under section 7 of this work plan, may be repeated every 6 months. The initial laboratory tests shall meet the specification requirements. If the joint essentially remains leak proof and accommodates pavement growth without showing signs of adhesive and cohesive failures, then it can be rated as "Pass". Otherwise it shall be deemed as "Failure". This shall be repeated every 6 months till the test is terminated at five year limit. For laboratory tests, at least two samples of each material used in the joint system shall be tested per requirements of section 9 above. Any other tests that come up at the time of installation shall also be looked into. The actual test values shall be kept as records for comparison with the same type of joints in other locations. Field test records shall be kept for comparison with those at different time intervals.

11. Cost Benefit Analysis: (Attach additional sheets when needed.

SEE ATTACHED SHEETS (pages A22 - A23)

Seal and Sign

(See the reverse side for instructions and definitions.)

12. Reports: (Attach additional sheets when needed.)

All reports shall be submitted to the Materials Products Evaluation Committee (MPEC).

Construction Report shall be prepared and submitted at time of Joint Installation. This shall include joint preparations, problems encountered during joint installation and laboratory test results.

Interim reports at 6 month intervals shall include the Joint Evaluation Form and a Pass-Fail Rating for each joint.

Final Report shall be submitted at the end of five years. This shall include the performance of each joint system, Ratings and the recommendation by the work plan Administrator as to the choice or choices of the joint systems that ADOT can adopt on the Highways.

13. Responsibilities: (Attach additional sheets when needed.)

These are outlined in the Instructions for the Work Plan. They are stated as follows.

a. Field evaluations will primarily be the responsibility of the District Personnel in conjunction with the ATRC and/or the Materials Group.

b. The District will oversee the preparation of the test sites by the Contractors, as well as the joint installations by the Contractors in the presence of the manufacturers of the products.

c. The District will arrange for the initial laboratory testing of the materials , will monitor and regularly inspect test sites and report on the performance of the product, as determined by the work plan.

d. The final performance report will be the responsibility of the Work Plan Administrator.

14. Duration: (Attach additional sheets when needed.)

The total duration for the verification program is recommended to be five years. Monitoring and evaluations shall be at maximum intervals of 6 months. The joint system shall be considered acceptable if there is no failure rating during the five year period.

15. Approved by:_____ Date:_____

16. Appendices: (Attach additional sheets when needed.

Seal and Sign

1. Problem Statement

a. Problems and needs:

The Bridge Approach/Anchor Slab Joint serves to accommodate the portland cement concrete pavement growth at the bridge approaches. Without the space for the pavement to grow, the bridge will be subjected to significant lateral stresses compromising the safety of the bridge. ADOT has been observing the past few years, debris and water penetrating the joint in several locations, essentially making the joint ineffective. The sealant material has become brittle and dry and even settlement of the approach slabs have taken place. ADOT needs a joint system that will not allow water and debris inside the joint and at the same time provides for sufficient expansion and contraction under traffic and weather conditions. Necessary attention to proper installation procedures are not being given.

b. Justification

ADOT has been confronted with defective joints in several locations in the State during the past few years. Unattended, the problem will remain without a solution. Defective joints will increase in number and costlier repairs and fix-ups will eventually follow. Verification of the proposed solutions is essential to choose one or more joint systems for adaptation by ADOT and thus for the upkeep of the bridges and the highway system throughout the State.

c. Literature search findings

The surveyed literature emphasizes the need and importance of bridge approach and pavement joints. Without them, undue stresses are built up against bridge structures. The joint must prevent entry of debris and water, provide for thermal and shrinkage movements and transfer traffic loads smoothly. Joint systems are two kinds; one is narrow with sealants and seals, the other is wide with flexible material to relieve pressure from the pavement resistance or growth. Qualities of an efficient and effective joint were obtained from the literature study. Spalling concerns are addressed. The literature search included the joint systems in use in other States. New joint solutions proposed are based on in part on the literature study.

d. Product/Technique search findings

The literature survey, the information obtained from DOTs of other States and the product manufacturers, brought to limelight several products in use and available for the joints. The products used in the solutions for the testing program under this work plan are furnished below. The specifications for the same are given on pages 16 and 24 of the research report.

- Epoxy Concrete for Header
- Low Modulus Hot Poured Sealant
- Rapid Cure Silicone Joint Sealant
- Backer Rod
- Toolable or Non Self-Leveling Silicone Joint Sealant
- Continuous Preformed Elastomeric Neoprene Compression Seal
- Bonding Adhesive for Compression Seal
- Strip Seal
- Membrane Foam Sealant
- Bonding Adhesive
- Splicing Adhesive

4. Product /Technique Selection

a. The controlling joint system is the current ADOT joint with coal tar sealant. Solutions are devised around this system.
b. The criteria for selection of the material and installation are furnished on page 4 of Chapter II, Joint Function Requirements and Materials. They are repeated here for the benefit of the work plan Administrator.

The joint

- shall accommodate full expansion and contraction range of movements anticipated.
- shall have adequate anchorage and structural capacity.
- shall provide good riding surface.
- shall not induce undue stress in structure due to expansion and contraction.
- shall be silent and vibration free under traffic.
- shall facilitate maintenance repair, removal and replacement.
- shall be leak proof with continuous sealing element.
- shall be corrosion resistant.
- shall not be a catalyst or vehicle for electrolytic action.
- seal shall be durable.
- material and installation shall be cost effective.
- shall provide ease of installation.
- installation time shall be reasonable, since this has bearing on the length and degree of traffic interruption.
- failure shall not pose danger to traffic.

c. The following joint systems are devised for the verification program. The diagrams are furnished on pages 17-22 of the research report. The product guide specifications are given on pages 16 and 24 of the report.

- Low Modulus Hot Pour Sealant Joint
- Silicone Sealant Joint
- Precompressed Foam Joint
- Compression Seal Joint
- Armored Strip Seal Joint

7. Test Section Layout and Experimental Design

Test sections of PCCP and approach slabs shall be at regular intervals in order to compare the different solutions. Install a minimum of two joints of the same kind separated at random order. A test joint layout pattern is shown on page A19. Terminal joint treatments (Figure 9, page 22 of the research report) shall be followed since the function of the entire joint may depend on how well the transverse ends are protected. The PCCP shall have control and expansion joints as in a regular roadway. Seal and Sealant manufacturer's representative shall be present during the preparation of the slab edges and during the installation of the joint.

Joints shall be installed in a test section at the same temperature. The installation procedures shall be followed carefully at each location (page 15 of the report). Samples of all materials used in each system shall be taken and appropriate laboratory tests shall be performed. Traffic shall not be allowed till the joints are completely installed in a test section and all the materials are well set and cured.

The Joints shall be monitored at maximum 6 month intervals. The field evaluation form attached herewith (page A20) and the inspection requirements stated below shall be followed.

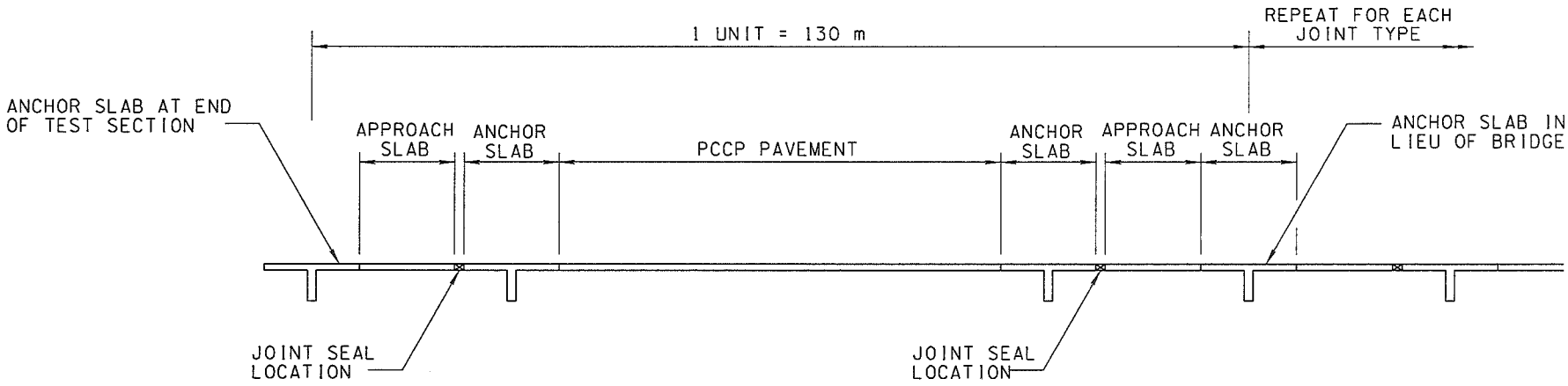

TEST JOINTS LAYOUT PATTERN

APPROACH/ANCHOR SLAB JOINT EVALUATION FORM

STRUCTURE NUMBER _____
STRUCTURE NAME _____ ROUTE _____ MILEPOST _____
APPROACH/DEPART _____ DIRECTION _____
OBSERVER _____ DATE _____
WEATHER _____ TEMP _____ TIME _____
TRAFFIC CONTROL _____

GENERAL PAVEMENT CONDITION _____

SEALANT TYPE _____
FLEXIBILITY (GOOD, MEDIUM, BAD) _____
MISSING SEALANT _____
ADHESIVE FAILURE
PARTIAL DEPTH _____
FULL DEPTH _____
COHESIVE FAILURE
PARTIAL DEPTH _____
FULL DEPTH _____
INTRUSION OF INCOMPRESSIBLES _____
JOINT WIDTH _____
SEALANT RECESS _____
SPALLING _____

COMMENTS, SKETCH

- General Pavement Condition: The condition of the approach slab and PCCP, cracks and settlements.

- Sealant Type : Type of material used to seal the joint.

- Flexibility of the sealant or seal: The ability of the material to retain its original shape after a finger pressed into the seal is removed. This quality is rated as excellent, good, medium or poor. Localized cracking of the hardened surface of the joint seal material determines whether the seal rates good or medium. Hard seals that rate poor may be reinspected when possible, at higher temperatures because of the significant variation, due to temperature, on the force required to deform the material.

- Missing sealant: The gap in the joint is measured and recorded nearest to the tenth of the meter.

- Adhesive Failure: This failure indicates the debonding of the sealant or seal from the edges of the slab. Two types of failure shall be recorded; one is the full depth debonding where no adherence exists between the material and the slabs; the other is the partial depth failure indicating the debonding does not penetrate the full depth of the seal. The extent and depth of debonding may be observed by sliding a one inch stiff blade spatula between the slab edges and the seal. The length of debonding shall be recorded to the nearest tenth of a meter. The average depth of debonding may be recorded to the nearest cm.

- Cohesive Failure: This is the cracking and checking of the sealant within the material. This is due to oxidation of the material due to UV rays and results in small cubes of the sealant breaking off and exposing new material. In this case also, two types of failures may be observed, full depth and partial depth. Lengths of these failures may be recorded to the nearest tenth of a meter. Cohesive failure is evident by visual inspection. The average depth of failure in partial depth oxidation may be measured to the nearest cm.

- Intrusion of Incompressibles: The typical incompressibles are sand and gravel in areas of adhesive failure. Periodically, the joint shall be maintained reasonably clean.

- Joint Width: The width of the joint may be measured in several locations along the roadway width and an average value may be recorded to the nearest 5 mm. Joint widths may be measured both in winter and summer months and recorded.

- Sealant Recess: Sealant recess may be measured within each joint and from joint to joint and recorded to the nearest 5 mm.

- Spalling: This condition along the edges of the approach slabs and PCCP may be recorded as minor or severe; minor when some spalling has occurred but had not compromised the integrity of the joint. The condition is severe in case of spalling that allows infiltration of water and or debris. The length of spalling may be measured and recorded to the nearest tenth of a meter.

8. Field Installation and Removal

The need for removal arises only if the joint becomes dysfunctional and involve heavy repair costs. The installation guide lines are furnished on page 15 of the research report. They are repeated here for the benefit of the work plan administrator.

- Concrete shall cure for a minimum period of seven days prior to sealant or seal installation.
- Joint reservoirs shall be formed and constructed so they are uniform and consistent in width.
- The sealant or seal bonding faces of the joint (new and existing joints to be repaired) shall be refaced by diamond sawing, immediately flushed with high pressure water and then sand blasted (on same day of sealing) prior to seal installation. The field inspectors should verify joint cleanliness before installation.
- Sand blasting shall be performed in two passes, one for each joint face, with the nozzle directed at each face in the same direction for both passes.
- Just prior to joint installation, the joint shall be blown out in one direction only.
- The nozzle used to install sealant should be such that the sealant is filled from bottom to top.
- The temperature of hot poured sealant shall be monitored at all stages of installation.
- Material manufacturer's installation specifications shall be followed. If required by the manufacturer, the installer shall be certified by the manufacturer of the material.
- Allow three days to elapse after joint installation, prior to traffic.
- Continue pavement under barriers. Do not provide joints between pavement and barriers. Joint terminations are shown on Joint solution details (Figure 9, page 22 of the report).

Depending on the joint system, the manufacturer of the product may have additional recommendations or requirements to consider.

11. Cost Benefit Analysis

a. Cost of Testing may be based on the following breakdown of items

Project Item	Quantity	Cost per	Cost
Site selection, Planning and Coordination	Lump Sum		Lump Sum
PCCP 20 m wide and 65 m long	10 sections = 13,000 m^2	m^2	
Approach Slab 20 m wide 5 m long	10 sections = 1,000 m^2	m^2	

Project Item	Quantity	Cost per	Cost
Subgrade preparation	13,000 m^2	m^2	
Concrete Barrier	1,300 m	m	
Joint System I	2 x 20 m	m	
Joint System II	2 x 20 m	m	
Joint System III	2 x 20 m	m	
Joint System IV	2 x 20 m	m	
Joint System V	2 x 20 m	m	
Laboratory Testing			Lump Sum
Field Inspection and Evaluation for 5 years at 6 month intervals	10 times	evaluation	

b. Cost Benefit Analysis

The failure of existing joint system could lead to the failure of other features of the bridge approaches. Overall the cost of repairs and remediation including the cost of freeway closures could run very high. The cost of new joint system including the proportionate cost of testing, is anticipated to be comparatively low. More existing joint failures and more repairs would mean more cost savings with new tested joint system. This is the cost benefit to ADOT in undertaking this verification program.