ARIZONA DEPARTMENT OF TRANSPORTATION

REPORT NUMBER: FHWA-AZ90-340

VEHICLE-PAVEMENT INTERACTION

State of the Art

Final Report

Prepared by:
Michael S. Mamlouk
Center for Advanced Research in Transportation,
and the Department of Civil Engineering
College of Engineering & Applied Sciences
Arizona State University
Tempe, Arizona 85287-5306

January 1990

Prepared for:
Arizona Department of Transportation
206 South 17th Avenue
Phoenix, Arizona 85007
in cooperation with
U.S. Department of Transportation
Federal Highway Administration

The contents of this report reflect the views of the authors who are responsible for the facts and the accuracy of the data presented herein. The contents do not necessarily reflect the official views or policies of the Arizona Department of Transportation or the Federal Highways Administration. This report does not constitute a standard, specification, or regulation. Trade or manufacturer's names which may appear herein are cited only because they are considered essential to the objectives of the report. The U.S. Government and the State of Arizona do not endorse products or manufacturers.

Technical Report Documentation Page

1. Report No. FHWA-AZ90-340	2. Government Accession No.	3. Recipient's Catalog No.
4. Title and Subtitle VEHICLE-PAVEMENT INTERACTION		5. Report Date January 1990
		6. Performing Organization Code
7. Author (s) Michael S. Mamlouk		8. Performing Organization Report No.
9. Performing Organization Name and Address Center for Advanced Research in Transportation Arizona State University Tempe, Arizona 85287-5306		10. Work Unit No.
		11. Contract or Grant No. HPR-PL-1-37(340)
12. Sponsoring Agency Name and Address ARIZONA DEPARTMENT OF TRANSPORTATION 206 SOUTH 17TH AVENUE PHOENIX, ARIZONA 85007		13. Type of Report & Period Covered Final Report
		14. Sponsoring Agency Code

15. Supplementary Notes

Prepared in cooperation with the U.S. Department of Transportation, Federal Highway Administration

16. Abstract

In this study the literature related to vehicle-pavement interaction has been reviewed including the materials related to the on-going NCHRP Project 1-25(1). The vehicle characteristics that affect the pavement performance have been summarized such as the inertia of heavy trucks, suspension types, tandem axle spacing, tire types and tire pressure. Models used to analyze vehicles, pavements and vehicle-pavement interaction have been reviewed. The effect of vehicle-pavement interaction on weigh-in-motion data has been briefly discussed. A summary, comments, implications and potential use of recent research have been presented.

The interaction between vehicle characteristics and pavement performance is a complex subject which involves the effect of dynamic forces generated by vehicle suspension, vehicle mass, pavement roughness, vehicle speed and tires. A large research effort is still needed to provide better understanding of the relation between vehicle loads and pavement performance in an effort to rationalize the pavement design process.

17. Key Words Vehicle-Pavement Interaction, Dynamic, Modeling, Pavement		18. Distribution Statement Document is available to the U.S. Public through the National Technical Information Service, Springfield, Virginia, 22161	23. Registrant's Seal
19. Security Classification (of this report) Unclassified	20. Security Classification (of this page) Unclassified	21. No. of Pages	22. Price

TABLE OF CONTENTS

	PAGE
ABSTRACT	i
CHAPTER 1 - INTRODUCTION	1
1.1 Problem Statement	1
1.2 Objectives and Approach	2
CHAPTER 2 - VEHICLE CHARACTERISTICS	3
2.1 Background	3
2.2 Suspension Characteristics and Types	4
2.2.1 Spring and Damping Mechanisms	5
2.2.2 Types of Suspension	5
2.2.3 Tandem Axle Spacing	8
2.3 Tire Types and Pressure	11
2.3.1 Tire Types	11
2.3.2 Tire Pressure	14
CHAPTER 3 - VEHICLE, PAVEMENT AND VEHICLE-PAVEMENT MODELING	17
3.1 Background	17
3.2 Vehicle Modeling	17
3.2.1 Vehicle System Modeling Requirements (7)	19
3.3 Pavement Modeling	25
3.4 Vehicle-Pavement Interaction (17)	26
3.5 Weigh.-In-Motion (WIM)	29
CHAPTER 4 - OVERVIEW OF THE THE NCHRP 1-25 (1) PROJECT	31
4.1 Objective and Scope	31
4.2 Research Approach	31
4.3 Comments on Research Methodology	36
CHAPTER 5 - SUMMARY AND CONCLUSIONS	39
REFERENCES	41

CHAPTER 1 - INTRODUCTION

1.1 Problem Statement

The pavement design process requires a large amount of input data including traffic characteristics, material properties and environmental conditions. The crux of the problem is how to analyze such data to come up with the optimum layer thicknesses in order for the pavement to last for a specified design life without excessive failure. One of the important areas of analysis is how the pavement is affected by the application of wheel loads under various conditions, an area which has not been fully resolved.

Pavement is unique among other structures in that the designer has to relate the pavement thickness to life. A good method of pavement design is the method that accurately relates thickness to design life. If a pavement is designed to last for a specific life and it actually lasts for a smaller life, obviously this is not a good method of design. By the same token, if the pavement lasts for more than its design life, the method is also not good since this excess cost could have been spent somewhere else in a more efficient manner.

The pavement design process have been evolving in the last several decades. It ranged from the simple and arbitrary assignments of standard sections to sophisticated and time-consuming methods. Presumably the more factors considered in the design process, the more accurate the method would be. On the other hand, the method has to be practical in order to reduce the design cost and allow for its use on a routine basis.

Pavement performance is highly affected by the characteristics of heavy trucks. The interaction between vehicle characteristics and pavement performance is a complex subject which involves the effect of dynamic forces generated by vehicle suspension, vehicle mass, pavement roughness, vehicle speed and tires. In recent years several studies have been performed to evaluate the vehicle-pavement interaction. This subject is relatively new and the results of recent research have not been implemented yet. In fact, the sophisticated mathematical techniques used to analyze

the vehicle-pavement interaction have served to discourage potential users who could undoubtedly profit from using the findings of this valuable research.

1.2 Objectives and Approach

The main objective of this study is to review the results of recent research related to vehicle-pavement interaction and discuss its potential use in the management and design of flexible and rigid pavements. Possible implementation and use to the research findings by ADOT engineers will be derived.

Another objective is to comment on the on-going NCHRP Project 1-25(1), "Effect of Heavy Vehicle Characteristics on Pavement Response and Performance-Phase II," which is being conducted by the University of Michigan Transportation Research Institute (UMTRI) (1). Since ADOT engineers are potential users of the project results and since John Eisenberg, formally with the ADOT Materials Section, is a panel member for this project, it is important to provide a clear understanding of various aspects of the project from the pavement manager's viewpoint.

In this study the literature related to vehicle-pavement interaction especially the quarterly reports, project proposal, and other research literature related to the NCHRP project was reviewed. A summary, comments, implications and potential use of the project findings are presented in the following sections of this report.

CHAPTER 2 - VEHICLE CHARACTERISTICS

2.1 Background

The Characteristics of heavy vehicles that are of large interest to pavement performance include tire type and pressure, suspension and axle configuration as well as the axle load. These vehicle characteristics have significantly changed since the AASHO Road Test (2) in the late 50's and early 60's. These changes in the heavy vehicle characteristics made the current methods of pavement design obsolete or biased. The main reason for this problem is the empirical nature of such design methods which are valid only under the original conditions and are not adaptable to changes in these conditions.

The load applied by trucks on the pavement structure is dynamic which means that it varies from one instant of time to another. This variation in load with time is largely affected by road roughness, truck suspension, tire type, tire pressure as well as vehicle speed. These characteristics affect the inertia of both truck and pavement structure and result in varying the truck load above and below the static load. Therefore, if two axles having the same static load but with different suspension types, tire types, tire pressures, speeds and/or pavement roughness will affect the pavement differently. Due to the complexity of the problem, all methods of pavement analysis and design are based on the static loads. On the other hand if truck and road characteristics are not changing, empirical methods of pavement design will "mask" the dynamic effects. However, the truck industry is continuously changing and the pavement roughness varies from time to time and from road to another. Thus, it is important to consider these changes by developing pavement analysis and design procedures which are adaptable to these changes.

A heavy truck is complex from the dynamics standpoint. The mass of the truck can be broken down to a "sprung mass" and an "unsprung mass" (3). The sprung mass includes body, frame, powertrain, payload and driver. The unsprung mass includes axles, spindles, brakes, wheels and tires. Both sprung and unsprung masses bounce and contribute independently to the composite dynamic pavement load, although the bouncing of the sprung mass is much more than

that of the unsprung mass. The total load imparted to the pavement by a moving vehicle is the sum of the static load or weight of the vehicle and the loads generated by the vertical movements of both sprung and unsprung masses. The force generated on the pavement is related to the vertical movement according to Newton's second law (Force = Mass × Acceleration). Additional impact forces are also generated in cases where the tires lose pavement contact.

The sprung (suspended) mass develops two types of motion; bounce and pitch. The bounce is a simple up-and-down motion of the entire mass, while the pitch is an out-of-phase fore-and-aft bounce. In general, the pitch and bounce are coupled and an impulse at the front or rear wheel excites both motions. These motions occur at the "natural frequency" of the system. The natural frequency of bounce oscillation for a heavy duty vehicle at rated load is about 1-2 Hertz, while body pitch typically occurs at 6-7 Hertz. These natural frequencies increase as the suspended mass is reduced by payload removal.

The unsprung mass also exhibits oscillatory behavior, but at a natural frequency that is somewhat higher than that of the sprung mass. In the case of a single axle suspension, two types of motion occur. The axle may bounce up and own, with its centerline parallel to the ground, or the axle ends may bounce out of phase with each other (tramp). In the case of a tandem axle suspension, a third vibration mode of interaxle pitch is possible. In this mode, the tire force is cyclically shifted fore and aft between the two axles. The presence of this interaxle pitch requires a coupling mechanism between the two axles. The natural frequency of axle bounce and interaxle pitching is in the range of 10 to 12 cycles per second. The extend to which these interaxle vibration modes predominate, or exist at all, is a function of the design of the suspension system (3).

2.2 Suspension Characteristics and Types

The suspension is the mechanical system by which the axles of a truck or trailer are mounted on the vehicle chassis. The suspension is designed to achieve an optimum among load carrying capacity, durability, stability and control, and ride quality, under service conditions that

are determined by overall vehicle design, drive train and tire characteristics, cargo and operational usage, and road conditions (4). These design objectives are not necessarily optimum conditions for the road performance. The following paragraphs discuss specific properties and types of suspension systems.

2.2.1 Spring and Damping Mechanisms

The suspension system consists essentially of a spring mechanism and a damping system. The springs are components of the suspension intended to absorb the energy of the vehicles bumping over road surface irregularities. Several types of springs are used in truck suspensions. Steel leaf springs and air bags are the most popular. Flexible beams, torsion bars, and rubber and rubber-steel composite blocks are other types frequently used. On the other hand, the damping system may include shock absorbers or other devices designed to dissipate (damp) the bouncing vibrations of the vehicle and springs, and rods, bars, or beams intended to transfer loads between adjacent axles and stabilize the truck and trailer. Load transfer and dynamic behavior (vibrations and damping) are key to how axle suspensions influence pavement wear. These components work with the springs to give a suspension the operating qualities making it suitable for particular uses.

2.2.2 Types of Suspension

A number of approaches have been developed over the years for meeting the diverse performance requirements of heavy duty truck suspensions. For tandem axle suspensions, these approaches can be grouped into four design categories that are representative of virtually all current production: the walking beam, the leaf spring, the torsion bar, and the air suspension. Based on the way the load is transmitted to the truck axles, different suspensions affect the pavement performance differently. The following paragraphs summarize how the pavement is affected by various suspension types (3).

a. Walking Beam Suspension (Figure 2.1)

The walking beam suspension, favored for its roll resistance, off-road performance, and equalization effectiveness, comprises a significant though diminishing portion of the overall tandem suspension population.

The dynamic pavement loading activity of the walking beam can be described as moderate to high over smooth and slightly rough roads and high over very rough roads; this suspension exhibits the largest dynamic loading of the four suspension types. Because there is so little damping at the walking beam, much of this activity is generated by the interaxle pitching of the unsuspended mass about the walking pivot. In essence the two axle masses bounce out of phase against the "spring" of the tires. since tires can have very little inherent damping, oscillation amplitudes can become high if road inputs are encountered at the natural frequency of interaxle pitch (approx. 10 Hertz).

b. Leaf Spring Suspension (Four-Spring and Six-Spring) (Figure 2.2)

The leaf spring suspension is the most common heavy-duty suspension for on-highway vehicles primarily due to its low cost, low weight, and low maintenance requirements. These features make the four spring particularly popular for trailers and converter dollies. For the most part the behavior of the four spring is indicative of the behavior of any single-leaf type suspension such as that used almost universally as the front axle suspension of heavy-duty vehicles.

The dynamic pavement loading activity of the four-spring suspension can generally be described as moderate over most roads and is generally acknowledged to represent an improvement over the activity level of the walking beam suspension.

c. Torsion-Bar Suspension (Figure 2.3)

This relatively uncommon suspension type is used primarily in the western U.S. and Australia. Typically priced slightly higher than the four spring, the light-weight torsion-bar suspension generally provides the best ride offered by a mechanical suspension. Frequent lubrication requirements and high rebuild cost are principally responsible for its low popularity.

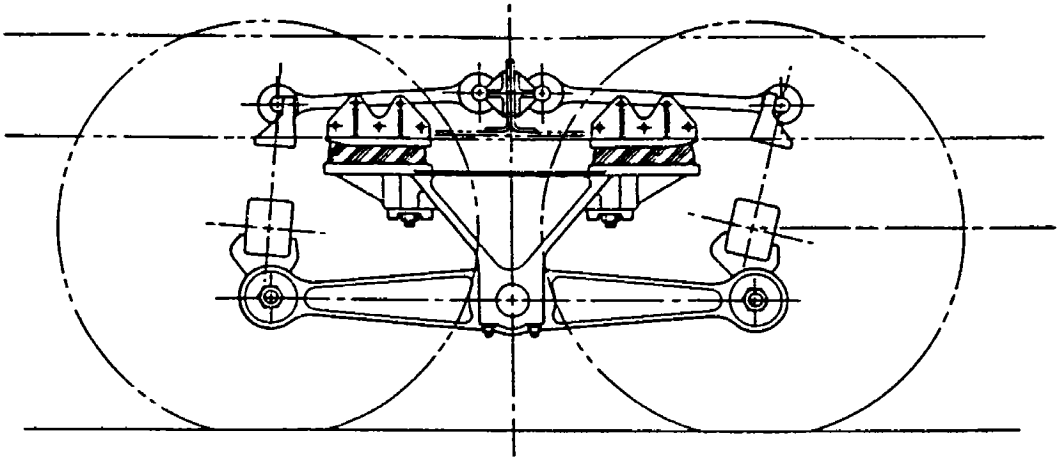

FIGURE 2.1. WALKING BEAM SUSPENSION

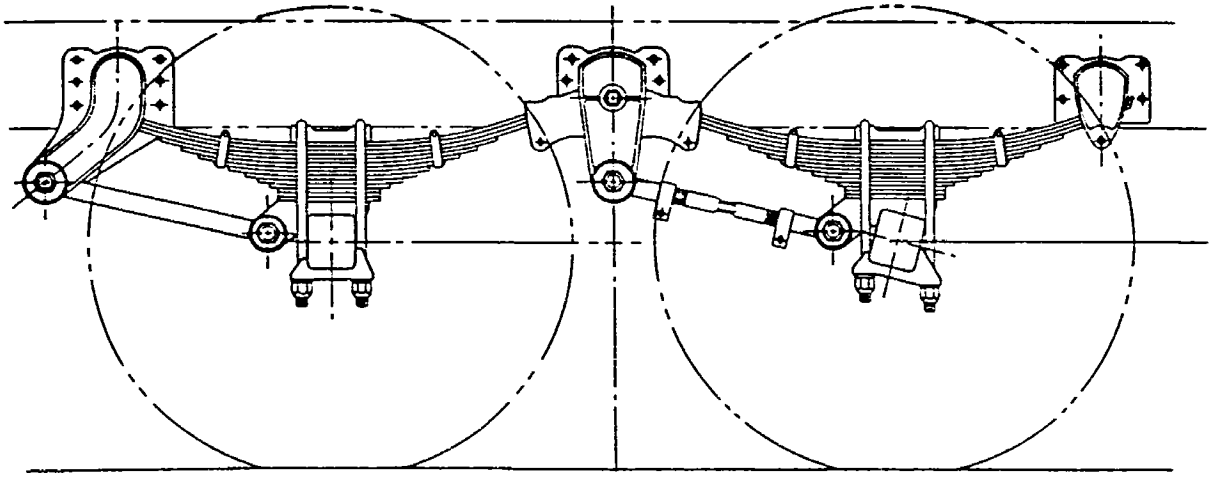

FIGURE 2.2. LEAF SPRING SUSPENSION

Dynamic activity of the torsion bar is low to moderate and is generally acknowledged to be significantly lower than that of the four spring.

d. Air Suspension (Air Bag) (Figure 2.4)

Although the air suspension can be more expensive than the other suspension types, it has become increasingly popular in recent years because of its smooth ride and the protection afforded the cargo.

The air suspension generally exhibits the least amount of dynamic loading activity of the four suspension types presented here.

Table 2.1 summarizes the principal characteristics and examples of major tandem suspensions currently used in trucks (4). The percent shares of various suspension types on new vehicles in the U.S. are shown below (4).

SUSPENSION TYPE	CLASS 8 TRACTORS	TAILERS
Walking Beam	15-25	<2
Leaf Spring	55-70	>80
Air Bag	15-20	10 - 15
Other	2-4	nil

2.2.3 Tandem Axle Spacing

Axle spacing is important in determining how truck and tailer loads are ultimately distributed to the highway pavement. Manufacturers of truck and trailers note that tandem axles are typically spaced 52 in. apart (on centers), although 50, 54, 60, and 72 in. spacing are also manufactured by special order. Minimum spacing is determined by tire size to be used on the vehicle and required inter-tire clearances. Maximum spacings may be restricted by spring dimensions and inter-axle load transfer mechanisms (4).

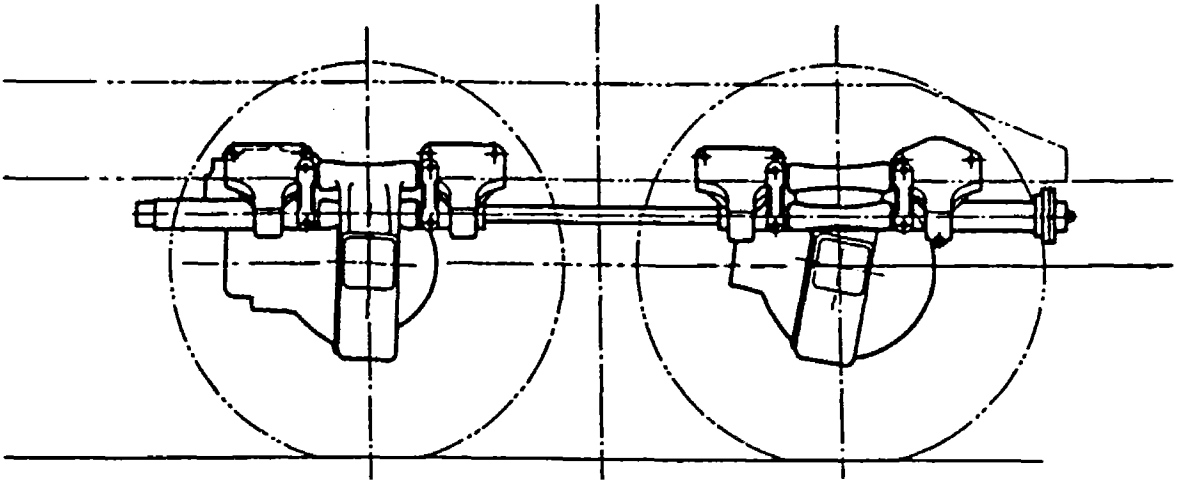

FIGURE 2.3. TORSION-BAR SUSPENSION

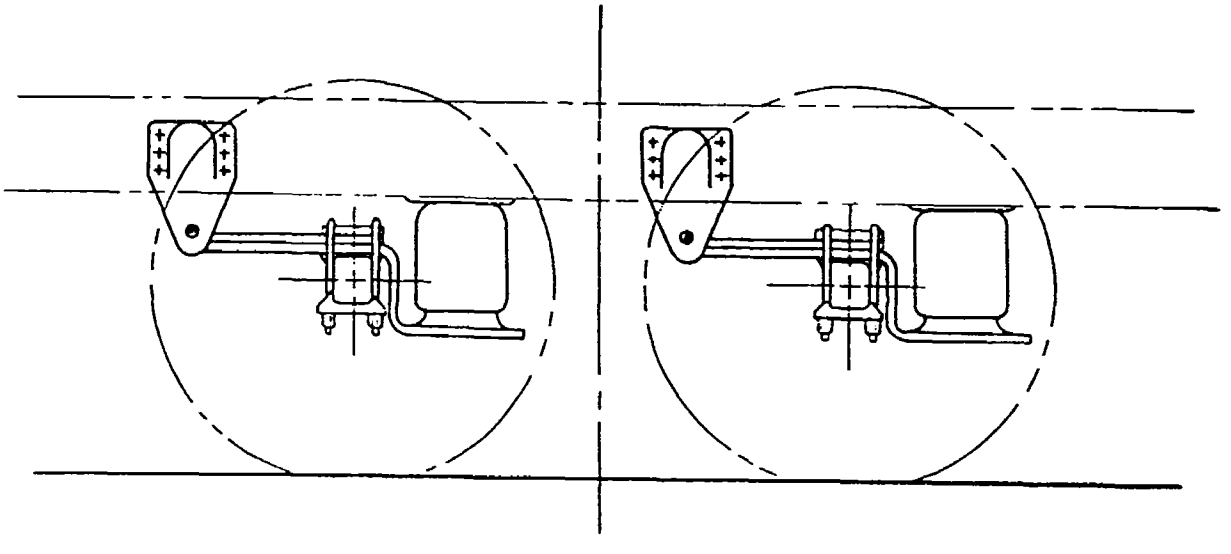

FIGURE 2.4. AIR SUSPENSION (AIR BAG)

TABLE 2.1. SUMMARY OF HEAVY TRUCK AND TRAILER SUSPENSION (4)

Suspension Type and Examples	Springs	Outstanding Features	Typical Users
Tandem Axles			
Walking beam Hendrickson RTE series Page LWH Husky	steel leaf, air bag, or rubber block	static equalization of load between adjacent axles	heavy haulers, construction vehicles
4-spring/6-spring Reyco 101, 102	steel leaf	simple design, lower maintenance costs	most over-the-road tractors and semitrailers
Air bag Neway GMC Astro-Aire	pneumatic air bellows	soft ride	carriers of vibration-sensitive goods
Torsion bar Kenwood TBB	steel torsion rod	light weight	not widely used
Other			
Mack Camelback	steel leaf	single point load equalization	heavy duty vehicles, on- and off-road operations
Kenworth 6-65	steel leaf		
Ridewell Dynalastic	rubber block		
Hendrickson RS series	rubber block	lower wear in tough duty	
Single Axles	steel leaf air bag	wide variety of spring rates available	nearly all heavy single axles

2.3 Tire Types and Pressure

In the AASHO Road Test (2), which developed the relationship between truck traffic and pavement wear that have for 30 years formed the basis for pavement design and truck weight regulation, the test vehicles predominantly used bias ply tires inflated to 80 psi cold inflation pressure, in accordance with what was believed to be standard practice and manufacturers' specifications at the time. Today, radial tires predominate on heavy trucks, and pressures of 100 psi are typical. New Tire designs, such as low profile tires and wide base single tries to replace dual tires, are gaining acceptance (4).

Higher tire pressure produces greater stress at the surface of the pavement, and highway engineers suspect that this effect is implicated in some instances of problems with wheel-path rutting in flexible pavement. Other characteristics of tires also influence the distribution of forces under the tires, and so may affect pavement wear. The AASHO Road Test results cannot be used to predict how pavement will respond to changes in tire types and pressures, and since the tires used in the test were so different from those in use today, predictions based on the road test which ignore tire differences may contain some degree of bias.

Trucks in over-the-road service (tractors and trailers) use tires with large diameters, typically mounted on rims with diameters of 20-24 inches. Rim diameter and tire section height and width are key parameters describing the size of a truck tire (Figure 2.5). The ratio of height to width, termed the aspect ratio, is sometimes stated. Nominal dimensions refer to the tire as it is manufactured. The Tire and Rim Association published dimension standards to which most manufacturers of tires sold in the U.S. adhere.

2.3.1 Tire Types

Tires are constructed with several layers of rubber and fiber as shown in Figure 2.6. Older designs used natural or synthetic fiber cord wrapped on an angle with respect to the tire tread -- i.e., on the bias. In radial tires the ply is wrapped perpendicular to the tread direction. Both bias and radial tires may be reinforced with fiber belts of steel, glass, or other material wrapped

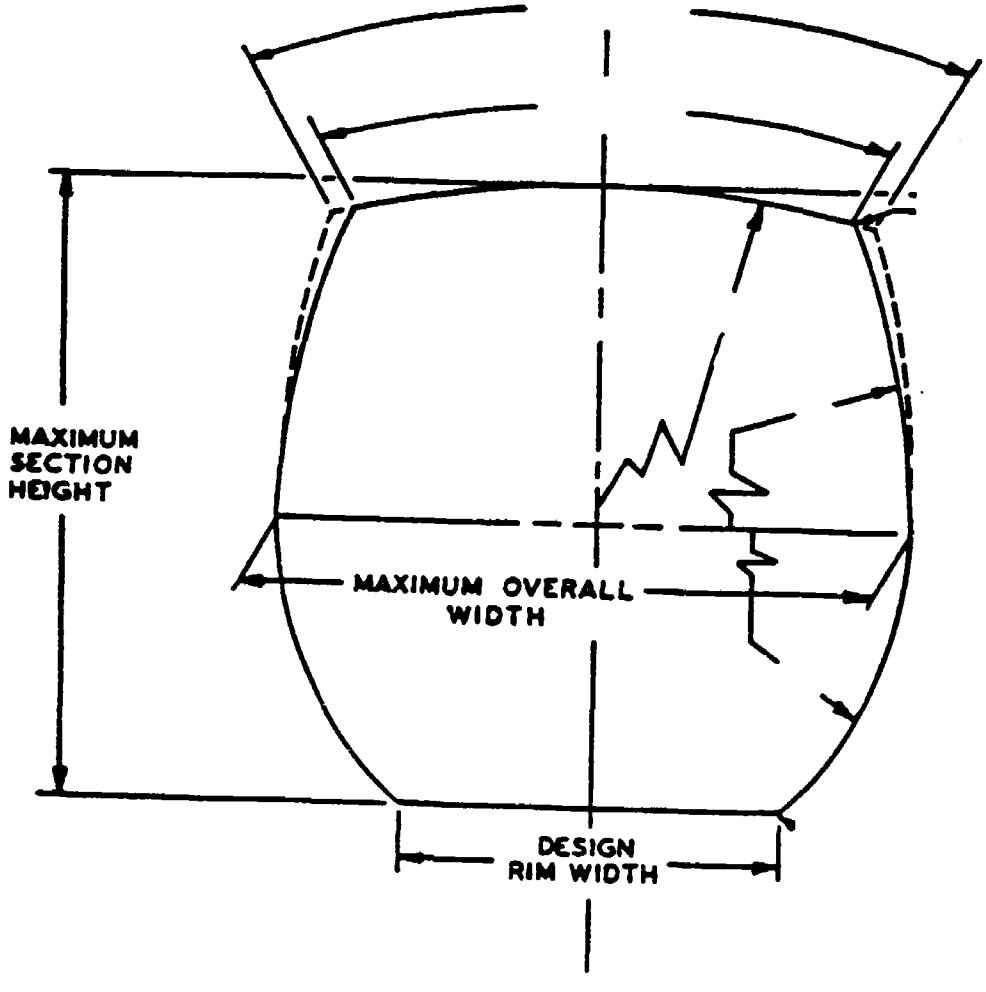

FIGURE 2.5. TIRE DIMENSIONS

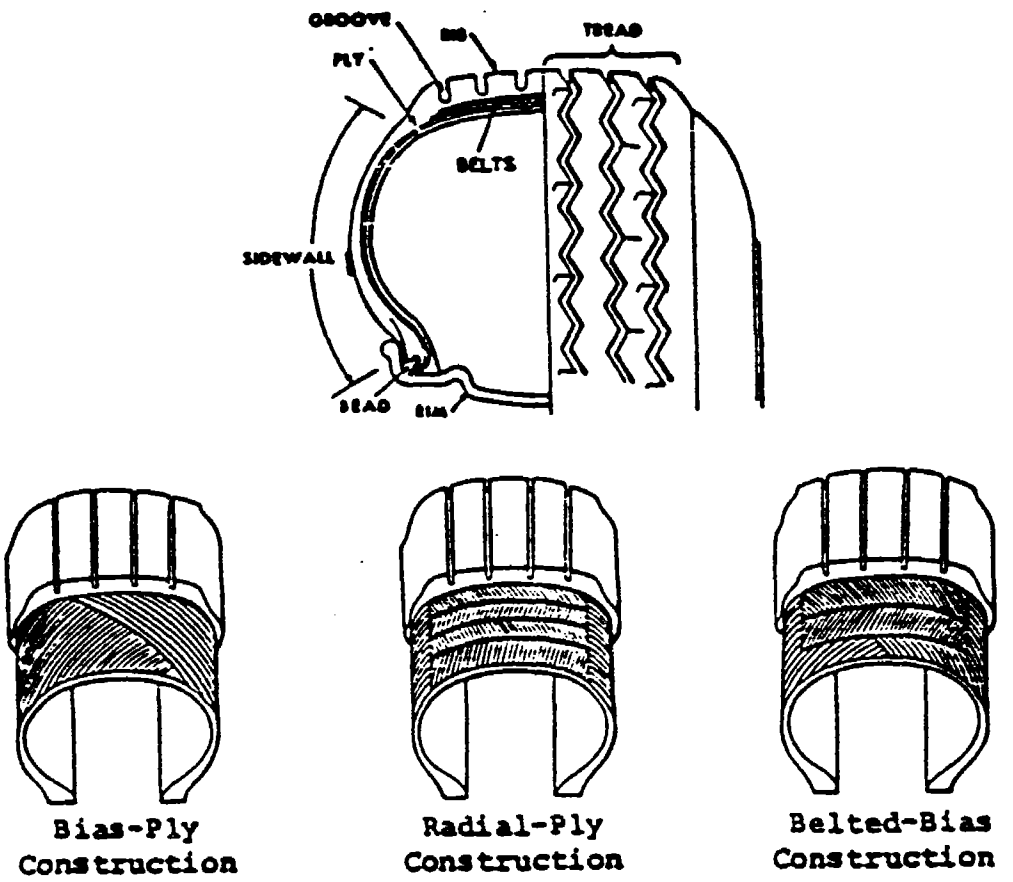

FIGURE 2.6. TIRE CONSTUCTION TERMS

generally parallel with the tread direction. Bias ply tires accounted for almost the entire U.S. tire market until the 1970's when European experience with improved ware, fuel economy, and road hazard resistance of radial tires began to have impact here (5).

A rapidly growing share of the tire market for long haul highway trucks is being met by the newer "low profile" designs as shown in Figure 2.7. The main advantage of low-profile tires may be the reduction in vehicle height and the associated increase in trailer cubic capacity.

Some manufacturers have introduced single "wide-base" tires (super singles) to be used in place of dual tires or when higher loads are to be carried. The main advantage of wide-base tires is the improved fuel economy. Although the wide-base tires are popular in Europe, the high cost of converting to wide-base singles and the reluctance of fleet operators to accept perceived risk of having only one tire at each end of an axle are said to have limited the U.S. market to date. Most wide base tires in this country are reported to be used on front drive axles of heavy hauler vehicles.

The following table summarizes the percentage sales of new tires installation in the U.S. in 1985-86 (4).

TIRE TYPE	PERCENT SHARE
Radials, compared to bias-ply	
Originally equipped	70-90
Replacements	50
Low profile, as fraction of all radials	
Originally equipped	35
Replacements	18
Wide base, as fraction of all radials	
All sales	2-3.5

2.3.2 Tire Pressure

Tire inflation pressures maintain the tire's design profile and thus proper road contact under vehicle loading. Vehicle operations with improper tire pressures lead to excessive tire wear, particularly with radial tires, and influence vehicles handling characteristics.

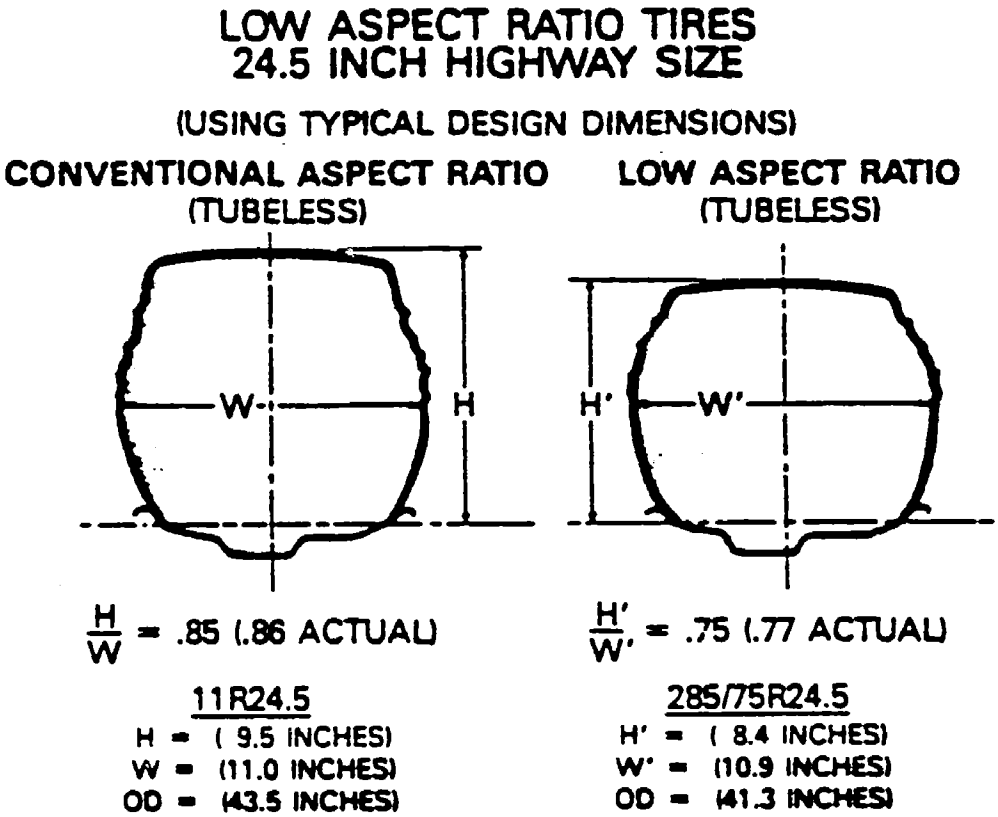

FIGURE 2.7. LOW PROFILE TIRES DEFINED BY SECTION ASPECT

Tires are designed to be operated with a fairly wide range of inflation pressures up to a maximum pressure recommended by the manufacturer. A given tire can be inflated to higher pressure, up to this maximum, to carry additional load and still perform in an efficient and safe manner. Too low a pressure at a particular load causes the tire to flatten out more, in turn causing added flexure and heat buildup in operation. Too high a pressure reduces contact area and stiffens the tire, increasing risk of skidding and loss of braking ability.

Tire pressure specifications typically refer to pressures in a tire at ambient air temperature, a "cold" pressure. In highway operations, tire flex and friction cause heating, which in turn causes increases in tire inflation pressure. Temperatures in summer operations can exceed 200 degrees F (6). Hot inflation pressures typically increase 10-20 psi over cold pressure in bias ply tires, and 5-15 psi in radials (6). The difference in pressure increase is due to the different flex of radial designs.

CHAPTER 3 - VEHICLE, PAVEMENT AND VEHICLE-PAVEMENT MODELING

3.1 Background

Our knowledge of the interaction between trucks and roads is yet insufficient to provide the clear understanding needed to develop a completely mechanistic pavement design method. Over the years, the trucking community has supported basic research leading to development of mechanistic models for truck dynamic behavior. Although much of this effort has focused on handling and braking behavior, the models provide the foundation needed for prediction of pavement loading produced by trucks.

The treatment of the problem of vehicle-pavement interaction can be broken down into four elements visually represented in Figure 3.1 (7). The key elements are as follows:

1) Developing mechanistic Truck Dynamic Models by which dynamic pavement loads can be predicted knowing the appropriate properties of the truck, its components, and the road surface.

2) Applying these to Pavement Structural Models to yield a map of the various responses (stresses, strains, deflections, etc.) in the pavement structure that are produced by the moving dynamic loads.

3) Developing Deterioration Models to relate the pavement responses to structural damage.

4) Deriving simplified formulas to reduce a complex set of truck properties to an equivalence factor (a Truck Equivalency Formula) which in turn can be related to pavement structural damage (equivalent Damage Formula).

It should be noted that the term "dynamic load" indicates variable loading with time. A true dynamic "response" should also consider the inertia of the object. In addition, there is a difference between the dynamic response of vehicles and the dynamic response of pavements. In other words, a dynamic vehicle model could be used with a static pavement model or vice versa. An accurate analysis of the effect of vehicles on the pavement should consider the dynamic response of both vehicles and pavement as well as their interactions, a model which does not currently exist.

3.2 Vehicle Modeling

The analysis of vehicles can fall anywhere in a broad spectrum of complexity, ranging from a stationary constant-amplitude load to highly sophisticated dynamic models that include thousands

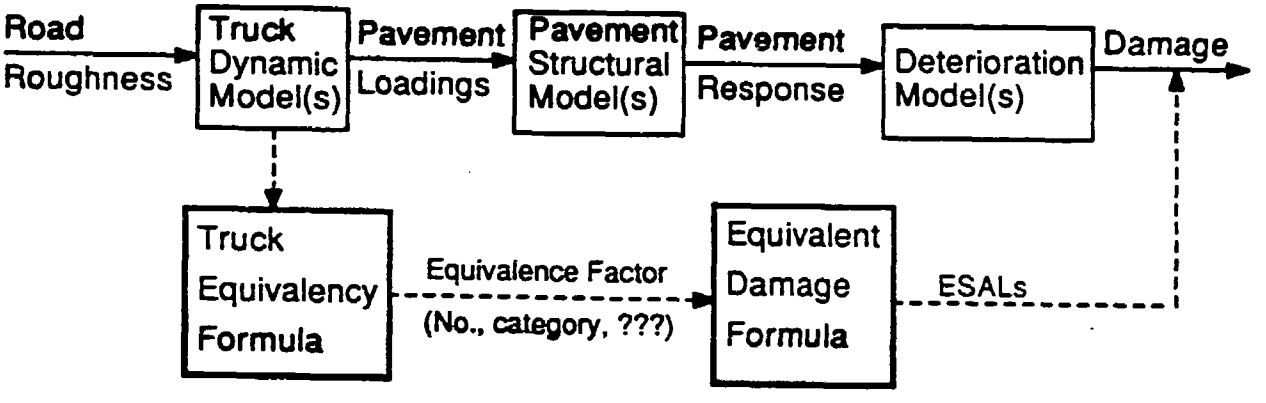

FIGURE 3.1. FLOW CHART OF THE ELEMENTS RELATING TRUCK DYNAMIC LOADS TO ROAD DAMAGE

of descriptive variables. The simplest form of vehicle dynamic models is the one that assumes a constant amplitude load moving on a perfectly smooth pavement surface. More sophisticated vehicle dynamic models consider the pavement roughness and its effect on the inertia of various vehicle components. This would result in non-uniform loads applied by various wheels on the pavement surface.

3.2.1 Vehicle System Modeling Requirements (7)

Past research in truck ride behavior provides a good foundation from which to propose the models that may be used to predict the dynamic loads for individual vehicles. For purposes of modeling the mechanics of the pavement damage problem the elements shown in Figure 3.2 represent the phenomena of interest. Road roughness, and to a much lesser extent, nonuniformities in the truck tire and wheel components are the primary excitation sources to the truck that will influence the dynamic loads produced. These, applied to a state-of-the-art dynamic model, will predict the moving dynamic loads as a function of location along the pavement. The outputs of the truck model are dynamic loads at multiple axles and wheels. The loads are actually imposed as normal and shear stresses in the contact patches of the tire. To the extend that the distribution of these stresses relate to the pavement damage, accurate tire models must be used in the application of the loads to the pavement structural models.

Road Roughness- Considerable research has been done by the NCHRP (8), World Bank (9) and others in characterizing the roughness of roads in a fashion appropriate as excitation to the vibration of road-using vehicles. Roughness is described by the random deviations in vertical elevation along the wheel tracks of the roadway. The elevation is normally sampled at intervals of 3-6 inches along the roadway to obtain adequate detail. The changing elevation values must be measured with a resolution of approximately 0.02 inches to accurately represent the excitation inputs to the vehicle.

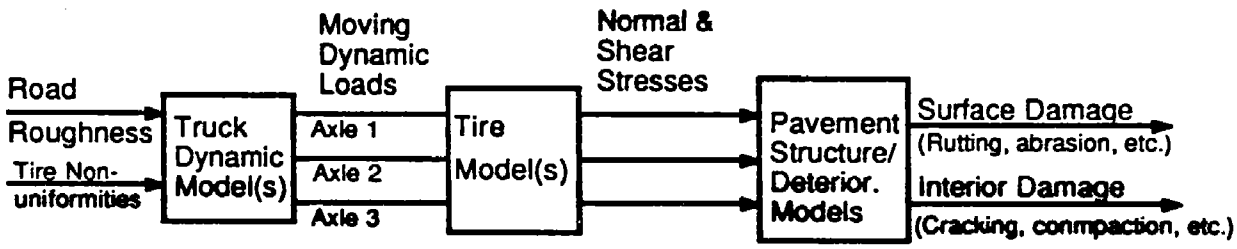

FIGURE 3.2. FLOW CHART OF THE TRUCK DYNAMIC LOADING MECHAMISM

The side-to-side differences in road elevation constitute a roll input to the vehicle. The roll excitation properties of roads have been studied by comparison against the vertical (bounce) inputs for the same roads. Generally, they are much lower in magnitude at normal highway speeds.

Tire Nonuniformities - Nonuniformities in truck tires and wheels take the form of dimensional runouts, circumferential stiffness variations, and mass imbalance (10). Normally, any significant nonuniformity becomes evident to the driver and will elicit a complaint about the vehicle. Thus the tire and wheel manufacturers have been forced to develop their products to the point where nonuniformities are too small to be perceptible to the driver. This natural control on the ride excitation levels from tire and wheel inputs has resulted in reduction of their magnitudes to less than that of the typical road. The current sate-of-the art is such that driver complaints regarding tire/wheel nonuniformities are no greater in magnitude than the roughness excitation level of smooth roads. This provides one basis for neglecting nonuniformities when modeling truck dynamic loads. A second argument for ignoring nonuniformities is that they will occur randomly. Although the nonuniformity force repeats with each revolution of the wheels on the truck, its point of application along the road is random. This contrast with the dynamic loads excited by road roughness, which being triggered by the roughness, always repeat in the same locations along the road.

Truck Dynamic Model - The dynamic model for a truck or tractor-semitrailer is typically of the form shown in Figure 3.3 (11). (In the case of a straight truck, the trailer is deleted and the mass of the tractor is adjusted to account for the load carried on the truck). This is known as a pitch-plane (bicycle) model and represents the vibrations experienced in the vertical plane passing longitudinally along the vehicle. More axles may be added to the model as necessary to represent different truck configurations. The models are typically implemented as time-domain computer simulation programs. Equations are written to describe Newton's Second Law applied to each of the masses, which the program solves at intervals of every few thousandths of a second. The

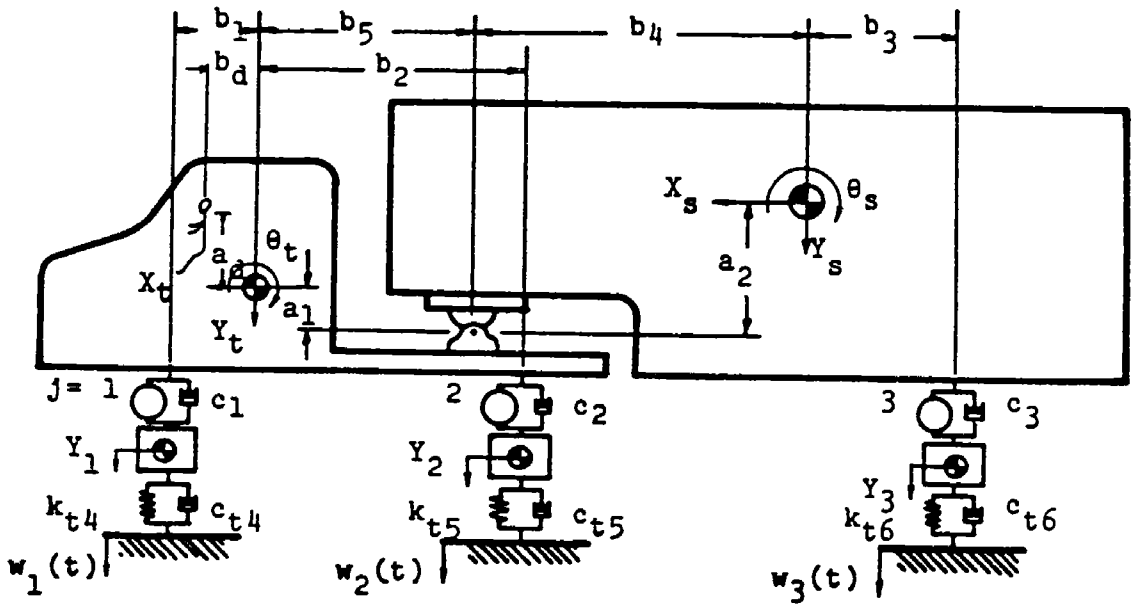

FIGURE 3.3. TRUCK DYNAMIC MODEL

simulation output is a time record of the forces and motions at various points of interest on the vehicle.

The model consists of rigid sprung masses representing the body or chassis of the vehicle sitting on suspension systems. The suspension rests on an axle with brakes and wheel components constituting another significant mass. These in turn rest on tires which act as a parallel spring and damper connection to the road surface.

This model is capable of duplicating the following vibration modes:

1) Vertical bounce and pitch of the tractor

2) Bounce or pitch of the trailer (because of its connection to the tractor, only one degree of freedom can be chosen)

3) Vertical bounce (hop) of each of the axles.

In the pitch-plane model of a 5-axle tractor trailer combination, 8 degrees of freedom are present and approximately 30 parameter values will be required to describe the vehicle.

The next step up in complexity is to add the roll degree of freedom to the model. In a roll model, roll degrees of freedom are added to the spring masses and the axles. The eight degrees of freedom in a 5-axle tractor trailer are increased to 15 in the roll model. Likewise the number of parameters required to describe the vehicle increases to about 80, although efficiencies from assuming left-to-right symmetry on the vehicle allows the actual number of parameters entered to be reduced to about 50. Considering the marginal significance of roll vibrations on truck, and the complexity required for roll computation, it is questionable whether a truck model including the roll degree of freedom will be cost effective in studies of truck dynamic loads, except under special circumstances.

Tire Models - The tire model as shown in Figure 3.3 is represented by a spring and, optionally, some damping. Tire damping is normally quite small in comparison with that produced by the suspension, and is thus often neglected in may truck models. With regard to the truck dynamic model, representing the tire as a spring of constant rate is usually sufficient. The rolling spring rate

tends to be slightly lower than the easily-measured static rate (12), but the differences usually are inconsequential to the dynamic behavior.

More important in the tire modeling is the treatment of the road roughness input through the contact patch. Roughness features that are short relative to the contact length of the tire are enveloped (8). The envelopment process may be duplicated by filtering the road elevation values input to a vehicle dynamic model. A simple and reasonably effective filter is a moving average of the profile elevation points over a length slightly longer than the contact patch. For example, a 12-inch filter length is commonly used when modeling the envelopment of passenger car tires. The filtered road elevation values are then used as vertical displacement inputs at the tires of a vehicle model. Since the rear axle(s) of the vehicle see the same road profile as the front axle as they advance forward, the same profile input is used at each axle, delayed in time by the ratio of wheelbase over travel speed.

Models to simulate the behavior of moving vehicles have been developed for several commercial trucks and buses and are described by O'Connell, Abbo and Hedrick (13), Hedrick, Cho, Gibson et al. (14), Hedrick, Markow, Brademeyer et al. (15), and Abbo (16). These models represent analytically the dynamic behavior of the component rigid bodies, axle suspensions, and tires as the vehicle moves along a pavement of specified roughness at a specified speed. The results is a force-time or force-distance profile, again as a function of (assumed constant) speed and pavement roughness. These force profiles can then be used as inputs to the models of pavement response (17).

Previous discussion shows that the knowledge of truck dynamics and simulation of truck behavior on computers is sufficiently developed at this time to identify models for initial use in first-generation studies of truck-pavement loading. However, several areas require careful treatment in order to develop the models to their full potential. In addition, tire models should be refined to accurately duplicate the stress distributions in the tire-pavement contact area if good surface damage predictions are to be obtained (7).

3.3 Pavement Modeling

A mathematical pavement model is one which predicts pavement response to combined load and environmental forces (18). This is different from a design model which uses the pavement response data along with the magnitude and number of load repetitions to predict specific types of pavement distress. Validation of the mathematical model requires the measurement of fundamental pavement responses under specific loading conditions and comparison of the measured results with calculated values.

Among the first of the mathematical models to be used for pavement analysis, and ultimately for design, were the Westergaard equations for the analysis of elastic plates on a Winkler type foundation. These equations were published in the time between the late 1920's through the 1940's. These equations have been the basis of a number of design procedures for PCC pavements over the years (19-21).

In the 1940's, Burmister published his elastic layered system theory (22,23). This is a basic analysis model and was not used to a significant degree for pavement design until the late 1960's. The significant advantages of the elastic layered model over the slab (Westergaard) model is that it provides for the analysis of multiple layered systems and for the effects of interface conditions between layers. The disadvantage of this model is that it requires pavement systems to be infinitely large in the horizontal direction, with no provision of the analysis of systems with joints or edge conditions. Also, when the pavement system contained more than two layers, the solutions to the simultaneous equations were very complex and time consuming.

In recent years there has been a proliferation of models for the analysis of both rigid and flexible pavement systems. The development of these models has generally paralleled the availability of "easy to use" computer systems to solve complex mathematical equations.

All mathematical models have one thing in common, namely that certain simplifying assumptions must be made in their development. Among the assumptions which might be made are linear elasticity, system continuity, viscoelasticity, homogeneity, isotropy or anisotropy, failure criteria, interface conditions, symmetry, horizontal extent, load transfer conditions, etc. Not all of

the assumptions are made with the development of every model, but some simplifying assumptions are required for each model. It is the assumptions made in their development which sets the models apart. Also, most models currently available are based on static load conditions, whereas the loading conditions encountered by the pavements in service are generally dynamic or impulse loads. Among the "static" multilayer programs are Chevron (24), ELSYM5 (25), VESYS (26), ILLI-PAVE and ILLI-SLAB.

The dynamic analysis of pavements has recently started by Mamlouk, Davies and Sebaaly (27-29). The computer program DYNAMIC (30) was developed which considered the inertia of the pavement layers when a harmonic or pulsating load is applied. The program is capable of computing stresses, strains and deflections at any point in the pavement system. Recently the program DYNAMIC has been downloaded to a microcomputer version by Sebaaly. In addition, some finite elements programs are currently available that are capable of analyzing the dynamics of pavement structures (e.g. 31). A difference between the static and dynamic responses of typical pavement structures in the field was reported in the literature (e.g. 32).

It should be noted that some researchers use static pavement models and modify them to accomodate constant-magnitude moving load. In this case the instantaneous static response could be determined without considering the inertia of the pavement system. These pavement models could be termed "quasi-dynamic" models as compared to true dynamic models which consider inertial effects.

3.4 Vehicle-Pavement Interaction (17)

In the general case, pavements and vehicles impose forces on each other through a process of progressive deterioration of the pavement surface due to applied loads, leading to excitation of axle suspensions resulting from increased surface roughness under a moving vehicle, and resulting in yet greater dynamic loads on the pavement surface. The process is thus an accelerating one, in which variations in pavement condition and vehicle load reinforce each other through time, and which becomes more significant as the pavement deteriorates further. Since this reciprocal

imposition of forces is influenced both by pavement characteristics and by vehicle characteristics, one must consider both of these factors in a dynamic, or time-dependent, environment, as well as other contributing factors, such as vehicle speed, in predicting the accumulation of pavement damage. The implication of this interactive process is that preservation of highway infrastructure can be managed not only through changes in pavement design, construction, maintenance, rehabilitation, and reconstruction, but also through control of vehicle dynamic loads by improving the characteristics of vehicles.

Previous research (and the highway practice that results from it) simplifies the problem: It views the interaction between vehicles and pavements predominantly as a one-way phenomenon, that of a layered structure responding to the loads imposed by traffic, and the influences of weather, subgrade, and past maintenance performed. This premise, embodied in virtually all design and performance models in use today, ignores the reciprocal interaction between the pavement and the vehicle it supports.

The development of analytical models to study the two-directional interaction between vehicles and pavements has been outlined by Brademeyer (17). The objective of such a study was to assess the impacts of "moving, dynamic" vehicle loads on both flexible and rigid surfaces. Furthermore, an underlying premise was to generalize the problem description and analytic procedures so that, for example, the combination of new axle configurations, new tire designs, and variations in tire pressures may be analyzed simultaneously. To accomplish this, the study employed two sets of simulation models.

One set of models simulates the behavior of several commercial vehicles, including their configuration and mass distribution, axle spacing and configuration, suspension characteristics, and tire behavior. The result of this simulation is a vehicle force profile containing digitized values of tire forces over distance (or time), representing the combined effects of all dynamic motions simulated.

The second set of models simulates the response of a pavement to the dynamic force profile of a moving vehicle developed above. These models predict both primary responses (stresses, strains, and deflections), and distress (cracking, rutting, spalling, faulting, etc.).

In theory, the two analytic steps above would need to be performed in an iterative process, in which vehicle forces are generated and applied to a pavement, the increment in pavement damage (specifically, roughness) due to this force profile computed, the resulting new force profile applied to the pavement, the new increment of roughness computed, and so forth. Since this procedure would be extremely expensive in computational resources, a close approximation can be employed instead.

The simplified procedure is as follows. Vehicle force profiles (for a given vehicle and speed) are obtained for several specific levels of pavement roughness ranging from very smooth to very distorted surfaces. The pavement responses are recorded in each case for subsequent interpolation on the roughness measure. Then the pavement simulation is performed, beginning with the initial vehicle force profile (e.g., for a new pavement). With each increment in damage and roughness, the program refers to the interpolation table just described and estimates the increment in pavement response that would result from the increment in tire forces due to the increment in damage. In this way, the vehicle and pavement simulations may be decoupled somewhat, gaining considerable efficiency in computation.

An important implication of these findings is the importance of the vehicle itself in influencing dynamic loads, implying that future policies governing the maintenance and rehabilitation of highway infrastructure may need to look at the vehicle as well as the pavement (and bridges). Furthermore, regulating heavy vehicles simply by gross weight and axle load may not be sufficient; the dynamic loads actually imposed by different axle configurations, suspensions, and tires may need to be accounted for. Finally, pavement management needs to be coordinated with the evolution in vehicle technology, since dynamic loads arise through the interaction of factors such as slab length, vehicle wheelbase, fault height, suspension damping, and axle spacing.

3.5 Weigh-In-Motion (WIM)

There are many variations of products on the market for the weighing of highway vehicles in motion, offered by as many as ten different vendors. Current technologies include strain gage load cells, strain gages on a beam, strain gage bending plates, the capacitance pads, and piezo-electric cable and film. Each of these are currently in testing or in actual use, and forty-six of the States currently have or have had weigh-in-motion systems as of 1988. The technology has been developed for more than forty years in this country, and enhancements will probably continue for many more years.

A great concern indicated by various highway agencies is that the WIM devices are not "accurate" enough since they do not duplicate the static weight (33-35). Also, under the same conditions the WIM device does not record the same weight; thus the results are not reproducible.

It is the opinion of the author that the problem is not the "accuracy" of the WIM devices, but it is how to interpret the WIM results. When a truck wheel passes over any point on the pavement surface this point feels a certain instantaneous dynamic force. Since the dynamic force applied by the truck wheel on the pavement surface varies instantaneously above and below the static weight, it would be a coincidence if the two readings match. Therefore, the WIM device records the actual dynamic force that is applied at that instant of time which in general different than the static weight. This instantaneous force could be at the peak, at the lowest point, or at any point in between.

Of course, there could be some device error the same way as with any other device. However, it is believed that most of the inconsistency in results obtained by WIM devices is due to the dynamic effect. Thus, the difference between the WIM results and the static weight should not be identified as "error" or "inaccuracy," but should be identified as "difference" between dynamic and static effects.

As a possible idea for research, a WIM device could be developed to capture the peak load applied by the axle on a relatively long stretch of the road. This peak force applied by the truck is

the load that is directly related to the pavement damages. This peak force could be further used as a basis for taxation and budget allocation.

CHAPTER 4 - OVERVIEW OF THE THE NCHRP 1-25 (1) PROJECT

4.1 Objective and Scope

The project title is "Effect of Heavy Vehicle Characteristics on Pavement Response and Performance-Phase II." The research project started in 1988 and is expected to complete in 1991. The research project is being performed by the University of Michigan Transportation Research Institute (UMTRI). The following discussion is based on the UMTRI proposal (1) and the quarterly progress reports until September 1989.

The objective of the proposed research is to analyze and evaluate the interaction between heavy vehicles and pavements for application to pavement management. This will be performed using computer simulation--i.e., dynamic models of truck applying loads to realistic models of pavement structures. With the confidence of properly validated models, it is possible to determine which properties of truck and pavement structures are most significant to deterioration of the roadway structure, and develop practical rules for guiding pavement and truck design.

The basic research approach outlined in the RFP is simple and direct: (1) select existing vehicle and pavement models to predict the loading interaction between vehicle and road, (2) exercise those models over a full range of conditions, (3) identify relationships between vehicle and pavement variables, (4) compare those relationships with similar findings from experimental work, and (5) report those relationships in a manner that is useful to planners and designers. In addition, two tasks are included for experimentally confirming the relationships identified from the computer study.

4.2 Research Approach

The study is being performed in 6 tasks as discussed below.

Task 1 - Model Selection

The objective of this task is to select vehicle and pavement models and integrate them into an overall simulation system suitable for carrying out the analytical study relating truck properties to pavement damage.

The overall simulation system will use the UMTRI Pitch-Plane model for trucks with a multi-layer visco-elastic model for flexible pavements (VESYSDYN) and a finite element model for rigid pavements (ILLI-SLAB). Rather than linking the truck and pavement models into one integrated simulation program, it was decided to treat the two separately. The rationale for this derives from the fact that the truck simulation can be used to generate a series of road profiles for a range of conditions (speeds, roughness, etc.) that can be applied to a number of pavement designs for response analysis, thereby avoiding duplication of the truck calculations. The overall system is designed around use of ERD (Engineering Research Division) format for storing and exchanging data between programs.

Task 2 - Prepare Plan of Field Experiment

The objective of this task is to develop plans for a field experiment by which empirical data will be obtained for the purposes of:

1) Demonstrating experimentally the trends in pavement response as a function of heavy-truck characteristics.

2) Providing data for validation of vehicle model.

3) Providing data for validation of the pavement models.

The Plan for Field Experiments was completed and sent to the NCHRP Panel. The comprehensive set of experimental tests outlined in the Plan were completed. Following the tests the staff has been working on reduction of the data collected for use in validating the vehicle and rigid pavement models.

Rigid Pavement Tests - The PACCAR Technical Center prepared a loaded three-axle truck with instrumentation to measure dynamic axle loads (strain gaged axles and axle accelerometers) and

body accelerometers. The truck was taken to three rigid pavement test sites build by the State of Illinois on route US 50. The University of Illinois provided instrumentation for measuring and recording pavement strains. The combined instrumentation systems were configured to record dynamic loads one each of the truck axles simultaneously with the pavement strains, using a common marker signal to synchronize the records. Static tests were conducted on two sites, accumulating a total of 39 test runs. Core samples were obtained to augment the records of the rigid pavement properties. At the completion of the test PACCAR engineers reduced the truck data to the "ERD format."

UMTRI Vehicle Tests - At the the completion of the rigid pavement test the truck was sent to UMTRI for parameter measurements. Suspension properties were measured and the axle strain gages were calibrated on the suspension parameter measurement facility. The vehicle center of gravity location and pitch moment of inertia were measured on the Pitch Plane swing. The vehicle was then shipped to PACCAR.

PACCAR Tests - At PACCAR the truck was converted back to a tractor (the ballast load was replaced with a fifth wheel) and it was coupled to a loaded trailer for detailed measurement of data for vehicle model validation.

Accelerometers were mounted on the tractor and trailer frames to record the bounce and pitch motions of both units that are needed for validation of the vehicle simulation models. Test were performed on rigid and flexible pavements on the PACCAR test track for which the profiles had been measured previously with the FHWA's PRO-RUT system, and on some 0.5-inch by 2-foot planks. Again, the raw data were converted to ERD format for distribution to the principles.

The primary data of interest from these tests will be the measurements of the truck dynamics on the profiled road sites, which can be used directly for validation of the simulation. Pavement responses were not measured in these tests.

Tests of the tractor-semitrailer combination were also performed on the PACCAR road simulator to measure suspension properties not obtained from the UMTRI tests. Since the trailer

had not been to UMTRI, its suspension properties were measured at PACCAR on the road simulator. Also measured was the load equalization of the tandem axles when they are moving out-of-phase. (The UMTRI suspension parameter measurement facility only exercises the two axles in phase.) Some of the measurements, duplicated in both tests can be used to compare the results obtained by the two different test methods.

Task 3 - Analysis

The pavement models are being re-configured to allow calculation of the pavement response histories at individual points in the pavement as a multi-axle truck passes over. This is obtained by calculating influence functions for the response at a point in the pavement due to load applied at any other point. A time history of the pavement response is then calculated by combining the effects from the dynamic loads of each axle as the truck is moved over the points of interest. The influence functions for flexible pavements are calculated using the multi-layer elastic model of VESYSDYN, and those for the rigid pavements are calculated by ILLI-SLAB.

A statistical summary of the pavement response must be complied from the calculations as a basis for estimating flexible pavement damage. A computer algorithm has been written to perform this function. The algorithm process output from the computed pavement responses to determine means, standard deviations, exceedances, and histograms for a pavement section.

The VESYSDYN program was modified to match the needs for this study. The modified version now induced dual tires, multiple axle sets and variable tire contact areas. The dual tires are represented as two circular contact areas at a lateral separation specified by the user. The load and contact areas of both dual tires are assumed to be equal. Multiple axle (up to 20) are handled by specifying axle location relative to the front axle of the vehicle, and providing a record of dynamic load for each axle. The variable tire area options now allows the pavement to be loaded either by a variable pressure, variable contact area or by combination of the two. Because the influence functions in the multilayer elastic model must be re-calculated with each contact area, there is a penalty in computation time when that option is used.

Task 4 - Identify Qualitative Relationships Between Vehicle and Pavement Variables

The objective in this task will be to search the results from the simulations to identify relationships between variables of the vehicle and pavement and the pavement response predicted. In effect, this is a search for relationships between the input parameters of the simulations (truck parameters, operating speed, pavement roughness, pavement materials properties, etc.) and the output of pavement response.

The search for relationships will be carried out using both statistical analysis packages and manually. Multivariable regression analyses are one means to sort out relationships when large number of variables are involved. But, at the same time, those packages have no inherent intelligence to discern transformations and alternate forms of the data that may help a relationship to emerge.

Task 5 - Model Trend Validation

The objectives of this task are to validate the trends observed in the relationships of truck properties and pavement damage, and to validate the simulation models (vehicles and pavement) used in the calculations.

Data for the trend validation originally were to be obtained from the ARE test program. Insasmuch as those data will not be available and the project budget does not include funding for new testing, it is expected to obtain data from the SHRP project ("A Study of Road Damage due to Dynamic Wheel Loads Using a Load Measuring Mat") testing the Golden River truck weighing mats, and from other testing conducted at Cambridge. The SHRP project involves testing of a mat-type weighing system at Navistar Truck Company. The mat is a 40-meter section with 96 transducers that sample the weight of each truck axle every 0.4 meters. The test program, which has just started, involved running approximately 10 different trucks (with a variety of suspension systems and load conditions) across the mat at a range of speeds, in both directions, and with repeat runs, during which the dynamic loads will be measured.

TASK 6 - FINAL REPORT

A final report will be prepared for submission to NCHRP. The final report will describe the objectives and methods used in the research program. The rational for selection of the vehicle and pavement models will be presented along with their descriptions and critique of their adequacy for the purpose of predicting pavement response to heavy trucks. The limitations and shortcomings of the models will be discussed to educate other researchers on areas where improvement may be possible.

4.3 Comments on Research Methodology

The NCHRP 1-25(1) project is a major step forward towards understanding the vehicle dynamics and vehicle-pavement interaction. Pavement design has been based on empirical relations which are valid only under the original conditions used in developing these relations. The NCHRP project, if successfully completed, will result in a better understanding of basic pavement response concepts that eventually will help rationalizing the pavement design process.

The study is well planned and is progressing in the right direction. The research principal investigators are well qualified in the area of vehicle dynamics. The research project, however, is heavily envolved in vehicle dynamics with little emphasis on advancing the pavement design concept. The following paragraphs discuss some comments that could upgrade the qualify of the project.

1. The UMTRI study will be able to evaluate stresses or strains accurately due to individual truck loading conditions such as specific suspension type, load configuration, etc. No attempts will be made to relate basic pavement responses to pavement distress (development of performance relations).

   Traffic forecasts are usually given in terms of the number of equivalent 18 kip single axle loads (ESAL). The predicted ESAL are normally calculated from equivalency factors developed from data collected at the AASHO Road Test. These equivalency values are based on overall pavement performance and do not intrinsically reflect the implications of

pavement response to load and the concomitant pavement distresses, as is done in the mechanistic based design procedures.

If load equivalency factors are to be used in the mechanistic based design and evaluation procedures, such equivalency factors must be established using the same criteria as used in the pavement design procedure. If, for example, the mechanistic based design procedure is based on fatigue in various pavement components, then the equivalency values for that design approach should also be based on fatigue in the same pavement components. Thus, to make the transition to mechanistic based design procedures it will be necessary to evaluate the impact of combined loads and environmental forces on fundamental pavement responses (18).

The VESYSDYN program which will be used in the study can predict the performance of flexible pavements. However, the program is based on the use of the cumulative ESAL using the AASHTO equivalency factors. This has nothing to do with the individual stresses or strains developed in this study. Similar comments could be derived for the ILLI-SLAB program.

The term "performance" is included in the title of the NCHRP project and in the RFP objectives. The researchers, however, are not putting much emphasis on the subject of performance of either flexible or rigid pavements.

2. In the UMTRI proposal it was stated that the researchers will use both dynamic vehicle models and dynamic pavement models. Later, the researchers decided to use VESYSDYN and ILLI-SLAB programs. Neither programs are truly dynamic. The original VESYS program is static which is based on the use of Chevron program (24). The modification that was made to change it to VESYSDYN is changing the constant-magnitude stationary force to a constant-magnitude moving force. However, the response of the pavement is still static using the Chevron subroutine. This means that the inertia of the pavement system is not considered and the program could be viewed as "quasi-dynamic." For example, there is no phase lag between the load and the pavement response. A true

dynamic pavement model has to include the mass matrix of the pavement materials. For an accurate vehicle-pavement interaction study, both vehicle dynamic models and pavement dynamics models should be used.

3. The UMTRI study is proposing "decoupling" the pavement response from the vehicle response. In fact, the term "decoupling" could mean the opposite of "interaction" which is the subject of the study. The approach of the study is to input the pavement roughness to the vehicle model and compute the vehicle load on the pavement. The pavement is then analyzed separately to get the pavement response It is further assumed that the pavement response does not affect the vehicle response. The reason given by the researchers is that the pavement deflection is far less than the vehicle deflection. It is true that the pavement deflection is small, yet this small pavement deflection could affect the vehicle response. A better approach is to compare the amplitude of the pavement deflection with the amplitude of the pavement roughness. If the deflection amplitude is larger than, equal to or slightly less than the roughness amplitude, an iteration process should be used. In this case both roughness and defleciton are input again to the vehicle model and the analysis is repeated until the pavement deflection in iteration number n gets close to that in iteration number n-1.

4. In general, the pavement gets rougher with the continuous application of traffic loads. This additional roughness with time affects the vehicle-pavement interaction. Since the subject of performance (or the change of roughness with time) is ignored in the study, the results will be limited to specific roughness levels.

5. The RFP calls for considering various tire types, tire pressures and tire contact areas. The UMTRI proposal indicates that the only critical parameter to be varied in the vehicle model is the spring stiffness of the tire. This simplification does not fully satisfy the objectives of the project.

6. In the experimental program used by UMTRI no flexible pavement primary response measurements will be performed although flexible pavements are more common than rigid pavements.

CHAPTER 5 - SUMMARY AND CONCLUSIONS

In this study the literature related to vehicle-pavement interaction has been reviewed. The data related to the on-going NCHRP Project 1-25(1), "Effect of Heavy Vehicle Characteristics on Pavement Response and Performance" have also been reviewed including the project proposal, quarterly reports and other related materials. A summary, comments, implications and potential use of recent research have been presented.

The vehicle characteristics that affect the pavement performance have been summarized. The vehicle characteristics of interest include the inertia of the heavy trucks, vehicle spring and damping mechanisms, suspension types, tandem axle spacing, tire types and tire pressure. Models used to analyze vehicles, pavements and vehicle pavement interaction have been reviewed. The affect of vehicle-pavement interaction on weigh-in-motion data has been briefly discussed. Finally, the NCHRP Project 1-25(1) objective, scope and research approach have been summarized and comments were presented.

Several conclusions could be derived from the available literature. It could be easily seen that the pavement performance is highly affected by the characteristics of heavy vehicles such as the suspension characteristics, speed and tire type and pressure. The dynamic characteristics of both vehicle and pavement could have a larger effect on the pavement service life. The current methods of pavement design are either empirical or over-simplified. Empirical approaches are limited to conditions under which the empirical relations were developed. On the other hand, over-simplified approaches do not necessarily match the actual pavement conditions. A large research effort is still needed in order to rationalize the pavement design process.

The NCHRP 1-25(1) project is a major step forward towards understanding the vehicle dynamics and vehicle-pavement interaction. The project is well planned and is progressing in the right direction, yet it is felt that the project is heavily involved in the vehicle dynamics area with little emphasis on advancing the pavement design concepts. Some parts of the NCHRP study could have been handled better such as the subject of pavement performance, pavement dynamics,

"decoupling" of the pavement response from the vehicle response and the lack of flexible pavement primary response measurements. Inspite of this, the findings of the NCHRP project will enhance the understanding of the complicated nature of the vehicle-pavement interaction. The findings of the NCHRP project could have some impact on the current pavement design practice of ADOT and of the highway community in general.

REFERENCES

1. "Effects of Heavy Vehicle Characteristics on Pavement Response and Performance-Phase II," proposal from the University of Michigan to the National Highway Cooperative Research Program, NCHRP Project No. 1-25(1), Feb. 1988.

2. American Association of State Highway and Transportation Officials," AASHO Road Test," Special Report 61A-61G, Highway Research Board, Washington, D.C., 1962.

3. "Effect of Heavy Suspension Design on Dynamic Pavement Loading," Western Highway Institute, San Bruno, CA, June 1989.

4. Morris, J.R., "Effect of Heavy Vehicle Characteristic on Pavement Response and Performance - Phase I," A report prepared for NCHRP, Aug. 1987 (Revised Dec. 1987).

5. Wisla, M., "Trends for Tires," Vol. 13, No. 2, Fleet Equipment, Feb. 1987.

6. Sharp, A, III, "Truck Tire Pavement Interaction," Presented at AASHTO Symposium on High Pressure Truck Tires, Austin, TX, Feb. 12 1987.

7. Gillespie, T.D., "Modeling Truck Dynamic Loads," Presented at the FHWA Load Equivalency Workshop, McLean, VA, Sept. 1988.

8. Gillespie, T.D., M.W., and L. Segel "Calibration of Response-Type Road Roughness Measuring Systems." NCHRP Project 1-18, NCHRP Report No. 228, Dec. 1980.

9. Sayers, M., Gillespie, T.D. and W. Paterson, "Guidelines for Conducting and Calibrating Road Roughness Measurements." World Bank Technical Paper, ISSN 0253-7494, No. 46, 1986.

10. Gillespie, T.D., "Relationship of Truck Tire/Wheel Nonuniformities and Cyclic Force Generation, UMTRI, Report No. UMTRI-84-18, April 1984.

11. El-Madaney, M.M. and Dokainish, M.A., "Articulated Vehicle Dynamic Analyses Using Equivalent Linearization Technique," Society of Automotive Engineers, Paper No. 801421, Nov. 1980.

12. Pottinger, M.G. et al., "A Review of Tire/Pavement Interaction Induced Noise and Vibration." The Tire Pavement Interface, ASTM STP 929, 1986.

13. O'Connell, S.P., Abbo, E., and Hedrick, J.K., "Analysis of Moving Dynamic Loads on Highway Pavements: Part 1 - Vehicle Response," Proceedings, International Symposium on heavy Vehicle Weights and Dimensions, Kelowna, British Columbia, June 1986.

14. Hedrick, K., Cho, D., Gibson, A., Isaacson, J., and O'Connell, S., "Determination of Road Stress Factors for Buses", Interim Report submitted to U.S. DOT Office of University Research under contract DTRS5684-C-0001, Feb. 1985.

15. Hedrick, J.K., Markow, M., Brademeyer, B., O'Connell, S., Delatte, N., and Gibson, A., "Predictive Models for Evaluating Load Impact Factors of Heavy Trucks on Current Pavement Conditions", Interim Report to U.S. DOT Office of University Research under contract DTRS5684-C-0001, Dec. 1985.

16. Abbo, E., "The Influence of Heavy Vehicle Dynamics on Rigid Pavements", Master of Science Thesis, Department of Mechanical Engineering, Massachusetts Institute of Technology, Jan. 1987.

17. Brademeyer, B.D., "Mechanistic Vehicle-Pavement Interactions," Presented at the FHWA Load Equivalency Workshop, McLean, VA, Sept. 1988.

18. Barenberg, E.J., "Role of Instrumented Pavements in Establishing Load Equivalencies," Presented at the FHWA Load Equivalency Workshop, McLean, VA, Sept. 1988.

19. Westergaard, H.M., "Stresses in Concrete Pavements Computed by Theoretical Analysis," Public Roads, Vol. 7, No. 2, April 1926.

20. Westergaard, H.M., "Theory of Concrete Pavement Design," Proceedings, Highway Research Board, Seventh Annual Meeting, 1927, Part I.

21. Westergaard, H.M., "Analytical Tools for Judging Results of Structural Tests of Concrete Pavements," Public Roads, Vol. 14, No. 10, Dec. 1933.

22. Burmister, D.M., "The Theory of Stresses and Displacements in Layered Systems and Applications to the Design of Airport Runways," Proceedings Highway Research Board, Vol. 23, 1943.

23. Burmister, D.M., "The General Theory of Stresses and Displacements in Layered Systems, "Journal of Applied Physics, Vol 16, No. 2,3 and 5, 1945.

24. Michelow, J., "Analysis of Stresses and Displacements in an N-layered Elastic Systems Under a Load Uniformly Distributed on a Circular Area, "California Research Corporation, Richmond, CA, 1963.

25. Kopperman, S., Tiller, G. and Tseng, M., "ELSYM5 Interactive Version-User's Manual," SRA Technologies, Inc., Arlington, Va, July 1985.

26. Kenis, W.J., "Predictive Design Procedures, VESYS User Manual-An Interim Design Method for Flexible Pavements Using VESYS Structural Subsystem," Final Report, FHWA, Washington, D.C., Jan. 1978.

27. Davies, T.G. and Mamlouk, M.S., "Theoretical Response of Multilayer Pavement Systems to Dynamic Nondestructive Testing," Record No. 1022, TRB, 1985.

28. Mamlouk, M.S., "Use of Dynamic Analysis in Predicting Field Multilayer Pavement Moduli," Record No. 1043, TRB, 1985.

29. Sebaaly, B.E., Davies, T.G., and Mamlouk, M.S.," Dynamics of the Falling Weight Deflectometer," Vol. 11, No. 6, ASCE, Transportation Engineering Journal, Nov. 1985.

30. Sebaaly, B.E., "Dynamic Models for Pavement Analysis," Ph.D. Dissertation, Dept. of Civil Engineering, Arizona State University, May 1987.

31. Kamel, H., "GIFTS Primer Manual," CASA/GIFTS Inc., Tucson, AZ, June 1988.

32. Hoffman, M.S. and Thompson, M.R., "Comparative Study of Selected Nondestructive Testing Devices," Record No. 852, TRB, Washington, D.C., 1982.

33. Davies, P. and Sommerville, F., "Calibration and Accuracy Testing of Weigh-in-Motion Systems," Record No. 1123, TRB, 1987.

34. Izadmehr, B. and Lee, C.E., "Accuracy and Tolerances of Weigh-in-Motion Systems," Record No. 1123, TRB, 1987.

35. "Concepts, Advantages, and Applications of WIM System," Proc., National Weight-in-Motion Conference, U.S. Dept. of Transportation, FHWA, Colorado Dept. of Highways, Denver, CO, July 1983.