TD100: A2 85-194-2

ARIZONA DEPARTMENT OF TRANSPORTATION

REPORT NUMBER: FHWA/AZ 85/194-II

STATIC AND DYNAMIC BEHAVIOR OF MONOTUBE SPAN-TYPE SIGN STRUCTURES

Final Report
Volume II

Prepared by:
M.R. Ehsani
S.K. Chakabarti
Reidar Bjorhovde
Arizona Transportation & Traffic Institute
College of Engineering
The University of Arizona
Tucson, Arizona 85721

June 1985

Prepared for:
Arizona Department of Transportation
206 South 17th Avenue
Phoenix, Arizona 85007
in cooperation with
U.S. Department of Transportation
Federal Highway Administration

The contents of this report reflect the views of the authors who are responsible for the facts and the accuracy of the data presented herein. The contents do not necessarily reflect the official views or policies of the Arizona Department of Transportation or the Federal Highways Administration. This report does not constitute a standard, specification, or regulation. Trade or manufacturer's names which may appear herein are cited only because they are considered assential to the objectives of the report. The U. S. Government and the State of Arizona do not endorse products or manufacturers.

CHNICAL REPORT STANDARD TITLE PAGE

1. Report No. FHWA/AZ-84/194-II	2. Government Accession No.	3. Recipient's Catalog No.
4. Title and Subtitle STATIC AND DYNAMIC BEHAVIOR OF MONOTUBE SPAN-TYPE SIGN STRUCTURES Volume II - Appendices		5. Report Date May, 1984
		6. Performing Organization Code
7. Author(s) M. R. Ehsani, S. K. Chakrabarti and R. Bjorhovde		8. Performing Organization Report No.
9. Performing Organization Name and Address Arizona Transportation and Traffic Institute College of Engineering University of Arizona Tucson, Arizona 85721		10. Work Unit No.
		11. Contract or Grant No. HPR-1-23(194)
12. Sponsoring Agency Name and Address Arizona Transportation Research Center Arizona Department of Transportation Arizona State University Tempe, Arizona 85281		13. Type of Report and Period Covered FINAL June 83 - May 84
		14. Sponsoring Agency Code

15. Supplementary Notes Prepared in cooperation with the U.S. Department of Transportation, Federal Highway Administration, from a study of Monotube Span-Type Sign Structures. The opinions and conclusions are those of the authors and not necessarily of the Federal Highway Administration.

16. Abstract

The report presents the results of the first major investigation into the static and dynamic behavior characteristics of monotube span-type sign structures. Detailed static and dynamic stresses and deflections have been determined for an actual 100 ft span sign structure, utilizing 2- and 3-dimensional finite element modeling. Parametric studies have also been made, where the effects of column stiffness, beam stiffness, span, and sign location and size were examined. It is shown that in-plane and out-of-plane analyses can be conducted independently, and that stresses for tubular members can be determined by vector addition. Static in-plane deflections generally govern the design, but do not satisfy the current AASHTO requirement of $d^2/400$, where d=depth of sign in feet. Structural resonance is found for a very narrow range of wind speeds, assuming no damping and sustained wind over a prolonged period. Design recommendations are made on the basis of stress and deflection computations for simple planar frames. Cambering is recommended for structures where gravity load deflections may be aesthetically undesirable.

Volume I - Final Report, 92 pages

17. Key Words Monotube; sign structures; single span; behavior; static; dynamic; stresses; deflections; design criteria; evaluating criteria.	18. Distribution Statement No restrictions. This document is available to the public through the National Technical Information Service, Springfield, VA 22161.

19. Security Classif. (of this report)	20. Security Classif. (of this page)	21. No. of Pages	22. Price
Unclassified	Unclassified	61	

Form DOT F 1700.7 (8-69)

ACKNOWLEDGEMENTS

The investigation described in this report was funded by the Arizona Department of Transportation in cooperation with the Fedral Highway Administration under Project No. HPR-1-23 (194).

The authors would like to thank Dr. R. H. Wortman and Dr. R. A. Jimenez of the Department of Civil Engineering at the University of Arizona. Dr. Wortman was of significant help during the initial stages of the project, and Dr. Jimenez assisted in the administration of the project as the Director of the Arizona Transportation and Traffic Institute.

The continuous support and helpful suggestions of the Arizona Department of Transportation personnel, in particular Messrs. Frank R. McCullagh, Roger Hatton, Rudolf Kolaja, Jamal Sarsam, James Pyne and Mike Sarsam are gratefully acknowledged.

The cooperation and hospitality of Valmont Industries, Inc., and especially those of Tom Sanderson during the visit to their manufacturing facilities located at Valmont, Nebraska, are very much appreciated.

Professor H. A. Kamel of the Department of Aerospace and Mechanical Engineering at the University of Arizona and his associates were helpful in resolving many problems that were encountered in the use of the computer program GIFTS.

Thanks are also due Carole Goodman, who did an excellent job in typing the report.

TABLE OF CONTENTS

Volume 1

		Page No.
1.	INTRODUCTION	1
2.	SCOPE AND OBJECTIVES	5
3.	PREVIOUS AND RELATED STUDIES	7
4.	STATIC BEHAVIOR OF MONOTUBE STRUCTURES	9
	4.1 Description of Typical Structure	9
	4.2 Modeling of the Structure	9
	4.3 Computer Program	15
	4.4 Loads on the Structure	18
	4.5 Results of the Static Analysis	20
5.	DYNAMIC BEHAVIOR OF MONOTUBE STRUCTURES	31
	5.1 Description of Typical Structure	31
	5.2 Modeling of the Structure	31
	5.3 Computer Program	31
	5.4 Loads	33
	5.5 Dynamic Behavior: Free Vibration of the Monotube Structure	37
	5.6 Dynamic Behavior: Forced Vibration of the Monotube Structure	46
	5.7 Correlation of Wind Speed and Maximum Amplitude	51
6.	PARAMETRIC STUDIES	54
	6.1 Choices of Parameters	54
	6.2 Results for Individual Structures	57
	6.3 Significance of Parameters	74
7.	DEVELOPMENT OF DESIGN RECOMMENDATIONS	77
	7.1 General Introduction	77
	7.2 Static versus Dynamic Behavior	77
	7.3 Two- vs. Three-Dimensional Analysis	80
	7.4 Proposed Analysis Procedure	82
	7.5 Simplified Criteria for Structural Evaluation	83
8.	CONCLUSIONS AND RECOMMENDATIONS	85
	8.1 Conclusions	85
	8.2 Recommended Future Studies	88
	REFERENCES	90

LIST OF FIGURES

Volume I

		Page No.
Fig. 1.1	Typical Monotube Sign-Support Structure	2
Fig. 1.2	Beam to Column Connection for a Sign-Support Structure	2
Fig. 1.3	Drawing of Monotube Structure	3
Fig. 4.1	Monotube Structure Used as Base Model for Study	10
Fig. 4.2	Typical Beam-to-Column Connection	11
Fig. 4.3	Typical Base Detail for Monotube Structure	12
Fig. 4.4	Detail of Traffic Sign Support Bracket	13
Fig. 4.5	Discretized Model of Monotube Structure for Computer Analysis	14
Fig. 4.6	Typical Beam Splice Detail for Monotube Structure	16
Fig. 4.7	Details of Beam-to-Column Connection Element for FEM Modeling	17
Fig. 4.8	Global and Displacement Coordinates for Monotube Structure	21
Fig. 4.9	Components of the Static Displacement for Node No. 16 (i.e. at Midspan of Beam)	26
Fig. 5.1	Discretization for Dynamic Loads and Masses Due to Signs	32
Fig. 5.2	Relationship Between Strouhal Number, S, and the Logarithm of Reynolds Number, R	34
Fig. 5.3	X-Y-Elevation View of Mode 1 for 2D Natural Vibration	41
Fig. 5.4(a)	Isometric View of Mode 1 for 3D Natural Vibration	42
Fig. 5.4(b)	Z-Y-Elevation View of Mode 1 for 3D Natural Vibration	43
Fig. 5.4(c)	Z-X-Plane View of Mode 1 for 3D Natural Vibration	44
Fig. 5.4(d)	X-Y-Elevation View of Mode 1 for 3D Natural Vibration	45
Fig. 5.5	Dynamic (Vortex Shedding) Loads on Monotube Structure for Wind Spped of 15 mph	45

LIST OF FIGURES

Volume I

		Page No.
Fig. 5.6	Displacement Histories for Nodal Points 16, 18, 23 and 27, Due to a Wind Speed of 15 mph	50
Fig. 5.7	Maximum Vertical Dynamic Deflections at Midspan of Beam for Different Wind Speeds	52
Fig. 6.1	Overall Dimensions for Base and Eight Parametric Models	55
Fig. 6.2	Discretized Model of Monotube Structure for Span Model 1	58
Fig. 6.3	Discretized Model of Monotube Structure for Span Model 2	59
Fig. 6.4	Maximum Vertical Dynamic Deflections at Midspan of Beam for Different Wind Speeds for Column Model #1	71
Fig. 6.5	Maximum Vertical Dynamic Deflections at Midspan of Beam for Different Wind Speeds for Beam Model #1	72
Fig. 6.6	Maximum Vertical Dynamic Deflections at Midspan of Beam for Different Wind Speeds for Span Model #1	73
Fig. 7.1	Beam Splice Detail to Achieve Suitable Camber	79

LIST OF TABLES

Volume I

		Page No.
Table 4.1	Static Nodal Loads for Different Cases of Loading (lbs)	19
Table 4.2	Static Displacements (in) and Rotations (rad) Due to D + I + W (1) Load Combination	22
Table 4.3	Static Deflections for Different Load Combinations (ins)	24
Table 4.4	Static Forces Due to D + I + W (1) Load Combinations	27,28
Table 4.5	Maximum Bending Stresses (1) (ksi)	30
Table 5.1	Natural Frequencies and Period for Monotube Structure	40
Table 6.1	Member Cross-Sectional Data for Column and Beam Models	56
Table 6.2	Member Cross-Sectional Data for Span Models	60
Table 6.3	Comparison of Static Deflections and Bending Stresses Between the Base Model and the Column Models	61
Table 6.4	Comparison of Static Deflections and Bending Stresses Between the Base Model and the Beam Models	63
Table 6.5	Comparison of Static Deflections and Bending Stresses Between the Base Model and the Span Models	64
Table 6.6	Comparison of Static Deflections and Bending Stresses Between the Beam Model and the Sign Models	66
Table 6.7	Natural Frequencies and Periods for All Monotube Structure Models	67-69
Table 6.8	Static and Dynamic (Wind Vortex Shedding) Deflections at Midspan	75

TABLE OF CONTENTS

Volume II

		Page No.
Appendix A:	Natural Mode-Shape Data for Basic Monotube Structure	1
Appendix B:	Numerical Evaluation of a Monotube Structure	22
Appendix C:	Background of the $d^2/400$ - Requirement of AASHTO.	56

LIST OF TABLES

Volume II

		Page No.
Table A.1	Displacements and Rotations for Natural Mode No. 1 (2-D)	2
Table A.2	Displacements and Rotations for Natural Mode No. 2 (2-D)	3
Table A.3	Displacements and Rotations for Natural Mode No. 3 (2-D)	4
Table A.4	Displacements and Rotations for Natural Mode No. 4 (2-D)	5
Table A.5	Displacements and Rotations for Natural Mode No. 5 (2-D)	6
Table A.6	Displacements and Rotations for Natural Mode No. 6 (2-D)	7
Table A.7	Displacements and Rotations for Natural Mode No. 7 (2-D)	8
Table A.8	Displacements and Rotations for Natural Mode No. 8 (2-D)	9
Table A.9	Displacements and Rotations for Natural Mode No. 9 (2-D)	10
Table A.10	Displacements and Rotations for Natural Mode No. 10 (2-D)	11
Table A.11	Displacements and Rotations for Natural Mode No. 1 (3-D)	12
Table A.12	Displacements and Rotations for Natural Mode No. 2 (3-D)	13
Table A.13	Displacements and Rotations for Natural Mode No. 3 (3-D)	14
Table A.14	Displacements and Rotations for Natural Mode No. 4 (3-D)	15
Table A.15	Displacements and Rotations for Natural Mode No. 5 (3-D)	16
Table A.16	Displacements and Rotations for Natural Mode No. 6 (3-D)	17
Table A.17	Displacements and Rotations for Natural Mode No. 7 (3-D)	18
Table A.18	Displacements and Rotations for Natural Mode No. 8 (3-D)	19
Table A.19	Displacements and Rotations for Natural Mode No. 9 (3-D)	20
Table A.20	Displacements and Rotations for Natural Mode No. 10 (3-D)	21
Table B.1	Data on Elements	24
Table B.2	Static Forces and Moments by Computer Analysis	28
Table B.3	Static Deflections	29
Table B.4	Maximum Static Bending Stresses (ksi) by Computer Analysis	31

LIST OF TABLES

Volume II

		Page No.
Table B.5	Static Forces and Moemnts by Simplified Analysis	51
Table B.6	Maximum Static Bending Stresses (ksi) by Simplified Analysis	53
Table B.7	Static Deflections by Simplified Analysis	55
Table C.1	Comparison of the Calculated Frequencies with AASHTO's Suggested Values	58

LIST OF FIGURES

Volume II

Figure B.1	Simplified Model for In-Plane Bending	32
Figure B.2	Dead Loads on the Simplified Model	33
Figure B.3	Ice Loads on the Simplified Model	33
Figure B.4	Dead Loads on the Simplified Model for Deflection	41
Figure B.5	Ice Loads on the Simplified Model for Deflection	42
Fibure B.6	Simplified Model for Out-of-Plane Bending	44

APPENDIX A

Natural Mode-Shape Data
for Basic Monotube Structure

Tables A1 to A10 = Data for Two-Dimensional Response

Tables A11 to A20 = Data for Three-Dimensional Response

Table A.1

Displacements and Rotations for Natural Mode No. 1 (2-D)

Node No.	Displacements			Rotations		
	u	v	w	θ_x	θ_y	θ_z
1	0.000E-01	0.000E-01	0.000E-01	0.000E-01	0.000E-01	0.000E-01
2	1.556E-04	8.494E-07	0.000E-01	0.000E-01	0.000E-01	-4.182E-06
3	4.810E-04	1.744E-06	0.000E-01	0.000E-01	0.000E-01	-5.286E-06
4	7.456E-04	2.690E-06	0.000E-01	0.000E-01	0.000E-01	-2.125E-06
5	6.295E-04	3.692E-06	0.000E-01	0.000E-01	0.000E-01	6.954E-06
6	6.297E-04	8.773E-05	0.000E-01	0.000E-01	0.000E-01	9.722E-06
7	6.311E-04	8.443E-04	0.000E-01	0.000E-01	0.000E-01	1.990E-05
8	6.327E-04	2.278E-03	0.000E-01	0.000E-01	0.000E-01	2.715E-05
9	6.341E-04	4.024E-03	0.000E-01	0.000E-01	0.000E-01	3.044E-05
10	6.356E-04	6.064E-03	0.000E-01	0.000E-01	0.000E-01	3.076E-05
11	6.371E-04	8.042E-03	0.000E-01	0.000E-01	0.000E-01	2.865E-05
12	6.383E-04	9.633E-03	0.000E-01	0.000E-01	0.000E-01	2.536E-05
13	6.394E-04	1.100E-02	0.000E-01	0.000E-01	0.000E-01	2.116E-05
14	6.399E-04	1.155E-02	0.000E-01	0.000E-01	0.000E-01	1.899E-05
15	6.413E-04	1.270E-02	0.000E-01	0.000E-01	0.000E-01	1.272E-05
16	6.425E-04	1.339E-02	0.000E-01	0.000E-01	0.000E-01	6.028E-06
17	6.438E-04	1.356E-02	0.000E-01	0.000E-01	0.000E-01	-1.422E-06
18	6.450E-04	1.314E-02	0.000E-01	0.000E-01	0.000E-01	-1.005E-05
19	6.455E-04	1.282E-02	0.000E-01	0.000E-01	0.000E-01	-1.347E-05
20	6.466E-04	1.181E-02	0.000E-01	0.000E-01	0.000E-01	-2.075E-05
21	6.477E-04	1.038E-02	0.000E-01	0.000E-01	0.000E-01	-2.769E-05
22	6.491E-04	8.317E-03	0.000E-01	0.000E-01	0.000E-01	-3.420E-05
23	6.505E-04	5.907E-03	0.000E-01	0.000E-01	0.000E-01	-3.795E-05
24	6.518E-04	3.612E-03	0.000E-01	0.000E-01	0.000E-01	-3.750E-05
25	6.532E-04	1.510E-03	0.000E-01	0.000E-01	0.000E-01	-3.136E-05
26	6.544E-04	1.934E-04	0.000E-01	0.000E-01	0.000E-01	-2.024E-05
27	6.546E-04	6.168E-06	0.000E-01	0.000E-01	0.000E-01	-1.699E-05
28	-2.028E-05	4.494E-06	0.000E-01	0.000E-01	0.000E-01	-5.462E-06
29	-1.574E-04	2.914E-06	0.000E-01	0.000E-01	0.000E-01	2.244E-07
30	-7.373E-05	1.419E-06	0.000E-01	0.000E-01	0.000E-01	1.663E-06
31	0.000E-01	0.000E-01	0.000E-01	0.000E-01	0.000E-01	0.000E-01

Table A.2

Displacements and Rotations for Natural Mode No. 2 (2-D)

Node No.	Displacements			Rotations		
	u	v	w	θ_x	θ_y	θ_z
1	0.000E-01	0.000E-01	0.000E-01	0.000E-01	0.000E-01	0.000E-01
2	-1.891E-04	2.870E-08	0.000E-01	0.000E-01	0.000E-01	5.538E-06
3	-6.856E-04	5.895E-08	0.000E-01	0.000E-01	0.000E-01	9.696E-06
4	-1.384E-03	9.090E-08	0.000E-01	0.000E-01	0.000E-01	1.188E-05
5	-2.135E-03	1.248E-07	0.000E-01	0.000E-01	0.000E-01	1.127E-05
6	-2.135E-03	1.101E-04	0.000E-01	0.000E-01	0.000E-01	1.073E-05
7	-2.136E-03	5.886E-04	0.000E-01	0.000E-01	0.000E-01	8.387E-06
8	-2.137E-03	1.018E-03	0.000E-01	0.000E-01	0.000E-01	5.912E-06
9	-2.138E-03	1.309E-03	0.000E-01	0.000E-01	0.000E-01	3.758E-06
10	-2.138E-03	1.490E-03	0.000E-01	0.000E-01	0.000E-01	1.719E-06
11	-2.139E-03	1.546E-03	0.000E-01	0.000E-01	0.000E-01	-4.963E-09
12	-2.140E-03	1.508E-03	0.000E-01	0.000E-01	0.000E-01	-1.295E-06
13	-2.140E-03	1.400E-03	0.000E-01	0.000E-01	0.000E-01	-2.379E-06
14	-2.141E-03	1.330E-03	0.000E-01	0.000E-01	0.000E-01	-2.817E-06
15	-2.141E-03	1.091E-03	0.000E-01	0.000E-01	0.000E-01	-3.795E-06
16	-2.142E-03	7.899E-04	0.000E-01	0.000E-01	0.000E-01	-4.336E-06
17	-2.142E-03	4.418E-04	0.000E-01	0.000E-01	0.000E-01	-5.054E-06
18	-2.142E-03	6.755E-05	0.000E-01	0.000E-01	0.000E-01	-5.236E-06
19	-2.142E-03	-7.368E-05	0.000E-01	0.000E-01	0.000E-01	-5.179E-06
20	-2.142E-03	-3.674E-04	0.000E-01	0.000E-01	0.000E-01	-4.762E-06
21	-2.142E-03	-6.224E-04	0.000E-01	0.000E-01	0.000E-01	-3.847E-06
22	-2.141E-03	-8.238E-04	0.000E-01	0.000E-01	0.000E-01	-2.171E-06
23	-2.141E-03	-8.902E-04	0.000E-01	0.000E-01	0.000E-01	2.536E-07
24	-2.140E-03	-7.897E-04	0.000E-01	0.000E-01	0.000E-01	3.091E-06
25	-2.139E-03	-5.038E-04	0.000E-01	0.000E-01	0.000E-01	6.432E-06
26	-2.138E-03	-1.007E-04	0.000E-01	0.000E-01	0.000E-01	9.683E-06
27	-2.138E-03	-5.792E-08	0.000E-01	0.000E-01	0.000E-01	1.044E-05
28	-1.414E-03	-4.219E-08	0.000E-01	0.000E-01	0.000E-01	1.178E-05
29	-7.095E-04	-2.736E-08	0.000E-01	0.000E-01	0.000E-01	9.909E-06
30	-1.976E-04	-1.332E-08	0.000E-01	0.000E-01	0.000E-01	5.755E-06
31	0.000E-01	0.000E-01	0.000E-01	0.000E-01	0.000E-01	0.000E-01

Table A.3

Displacements and Rotations for Natural Mode No. 3 (2-D)

Node No.	Displacements			Rotations		
	u	v	w	θ_x	θ_y	θ_z
1	0.000E-01	0.000E-01	0.000E-01	0.000E-01	0.000E-01	0.000E-01
2	3.057E-05	2.078E-07	0.000E-01	0.000E-01	0.000E-01	-8.355E-07
3	9.764E-05	4.267E-07	0.000E-01	0.000E-01	0.000E-01	-1.141E-06
4	1.616E-04	6.579E-07	0.000E-01	0.000E-01	0.000E-01	-7.164E-07
5	1.680E-04	9.031E-07	0.000E-01	0.000E-01	0.000E-01	7.083E-07
6	1.681E-04	1.034E-05	0.000E-01	0.000E-01	0.000E-01	1.146E-06
7	1.683E-04	1.082E-04	0.000E-01	0.000E-01	0.000E-01	2.614E-06
8	1.685E-04	2.926E-04	0.000E-01	0.000E-01	0.000E-01	3.354E-06
9	1.688E-04	4.968E-04	0.000E-01	0.000E-01	0.000E-01	3.309E-06
10	1.690E-04	6.981E-04	0.000E-01	0.000E-01	0.000E-01	2.655E-06
11	1.692E-04	8.425E-04	0.000E-01	0.000E-01	0.000E-01	1.621E-06
12	1.694E-04	9.075E-04	0.000E-01	0.000E-01	0.000E-01	5.398E-07
13	1.696E-04	9.072E-04	0.000E-01	0.000E-01	0.000E-01	-5.910E-07
14	1.696E-04	8.844E-04	0.000E-01	0.000E-01	0.000E-01	-1.111E-06
15	1.698E-04	7.578E-04	0.000E-01	0.000E-01	0.000E-01	-2.427E-06
16	1.700E-04	5.407E-04	0.000E-01	0.000E-01	0.000E-01	-3.605E-06
17	1.701E-04	2.441E-04	0.000E-01	0.000E-01	0.000E-01	-4.490E-06
18	1.701E-04	-9.548E-05	0.000E-01	0.000E-01	0.000E-01	-4.741E-06
19	1.700E-04	-2.226E-04	0.000E-01	0.000E-01	0.000E-01	-4.607E-06
20	1.700E-04	-4.747E-04	0.000E-01	0.000E-01	0.000E-01	-3.858E-06
21	1.699E-04	-6.607E-04	0.000E-01	0.000E-01	0.000E-01	-2.341E-06
22	1.696E-04	-7.374E-04	0.000E-01	0.000E-01	0.000E-01	-2.846E-08
23	1.694E-04	-6.558E-04	0.000E-01	0.000E-01	0.000E-01	2.430E-06
24	1.691E-04	-4.493E-04	0.000E-01	0.000E-01	0.000E-01	4.089E-06
25	1.687E-04	-1.910E-04	0.000E-01	0.000E-01	0.000E-01	4.089E-06
26	1.684E-04	-2.216E-05	0.000E-01	0.000E-01	0.000E-01	2.283E-06
27	1.683E-04	-2.209E-06	0.000E-01	0.000E-01	0.000E-01	1.629E-06
28	1.921E-04	-1.610E-06	0.000E-01	0.000E-01	0.000E-01	-5.931E-07
29	1.229E-04	-1.044E-06	0.000E-01	0.000E-01	0.000E-01	-1.360E-06
30	3.961E-05	-5.083E-07	0.000E-01	0.000E-01	0.000E-01	-1.066E-06
31	0.000E-01	0.000E-01	0.000E-01	0.000E-01	0.000E-01	0.000E-01

Table A.4

Displacements and Rotations for Natural Mode No.4 (2 -D)

Node No.	Displacements			Rotations		
	u	v	w	θ_x	θ_y	θ_z
1	0.000E-01	0.000E-01	0.000E-01	0.000E-01	0.000E-01	0.000E-01
2	-6.501E-06	-1.187E-07	0.000E-01	0.000E-01	0.000E-01	1.654E-07
3	-1.806E-05	-2.436E-07	0.000E-01	0.000E-01	0.000E-01	1.556E-07
4	-2.174E-05	-3.757E-07	0.000E-01	0.000E-01	0.000E-01	-8.950E-08
5	-2.623E-07	-5.156E-07	0.000E-01	0.000E-01	0.000E-01	-6.485E-07
6	-2.761E-07	-7.880E-06	0.000E-01	0.000E-01	0.000E-01	-8.059E-07
7	-3.433E-07	-6.147E-05	0.000E-01	0.000E-01	0.000E-01	-1.249E-06
8	-4.195E-07	-1.403E-04	0.000E-01	0.000E-01	0.000E-01	-1.283E-06
9	-4.914E-07	-2.100E-04	0.000E-01	0.000E-01	0.000E-01	-9.704E-07
10	-5.660E-07	-2.577E-04	0.000E-01	0.000E-01	0.000E-01	-4.281E-07
11	-6.365E-07	-2.672E-04	0.000E-01	0.000E-01	0.000E-01	1.542E-07
12	-6.958E-07	-2.447E-04	0.000E-01	0.000E-01	0.000E-01	6.050E-07
13	-7.524E-07	-1.990E-04	0.000E-01	0.000E-01	0.000E-01	9.350E-07
14	-7.776E-07	-1.721E-04	0.000E-01	0.000E-01	0.000E-01	1.040E-06
15	-8.425E-07	-9.131E-05	0.000E-01	0.000E-01	0.000E-01	1.152E-06
16	-9.041E-07	-1.033E-05	0.000E-01	0.000E-01	0.000E-01	1.043E-06
17	-9.634E-07	5.429E-05	0.000E-01	0.000E-01	0.000E-01	6.856E-07
18	-1.024E-06	8.154E-05	0.000E-01	0.000E-01	0.000E-01	3.601E-08
19	-1.047E-06	7.834E-05	0.000E-01	0.000E-01	0.000E-01	-2.426E-07
20	-1.097E-06	4.827E-05	0.000E-01	0.000E-01	0.000E-01	-7.189E-07
21	-1.150E-06	-3.045E-06	0.000E-01	0.000E-01	0.000E-01	-9.573E-07
22	-1.209E-06	-6.576E-05	0.000E-01	0.000E-01	0.000E-01	-8.436E-07
23	-1.271E-06	-1.038E-04	0.000E-01	0.000E-01	0.000E-01	-2.037E-07
24	-1.327E-06	-9.117E-05	0.000E-01	0.000E-01	0.000E-01	5.271E-07
25	-1.387E-06	-4.627E-05	0.000E-01	0.000E-01	0.000E-01	8.451E-07
26	-1.439E-06	-6.505E-06	0.000E-01	0.000E-01	0.000E-01	6.326E-07
27	-1.450E-06	-6.532E-07	0.000E-01	0.000E-01	0.000E-01	5.145E-07
28	1.587E-05	-4.760E-07	0.000E-01	0.000E-01	0.000E-01	7.998E-08
29	1.354E-05	-3.087E-07	0.000E-01	0.000E-01	0.000E-01	-1.138E-07
30	4.918E-06	-1.503E-07	0.000E-01	0.000E-01	0.000E-01	-1.246E-07
31	0.000E-01	0.000E-01	0.000E-01	0.000E-01	0.000E-01	0.000E-01

Table A.5

Displacements and Rotations for Natural Mode No. 5 (2-D)

Node No.	Displacements			Rotations		
	u	v	w	θ_x	θ_y	θ_z
1	0.000E-01	0.000E-01	0.000E-01	0.000E-01	0.000E-01	0.000E-01
2	-4.426E-06	-9.612E-08	0.000E-01	0.000E-01	0.000E-01	1.124E-07
3	-1.228E-05	-1.973E-07	0.000E-01	0.000E-01	0.000E-01	1.060E-07
4	-1.493E-05	-3.042E-07	0.000E-01	0.000E-01	0.000E-01	-5.375E-08
5	-1.479E-06	-4.174E-07	0.000E-01	0.000E-01	0.000E-01	-4.058E-07
6	-1.487E-06	-5.030E-06	0.000E-01	0.000E-01	0.000E-01	-5.018E-07
7	-1.525E-06	-3.753E-05	0.000E-01	0.000E-01	0.000E-01	-7.266E-07
8	-1.569E-06	-8.041E-05	0.000E-01	0.000E-01	0.000E-01	-6.302E-07
9	-1.609E-06	-1.099E-04	0.000E-01	0.000E-01	0.000E-01	-3.103E-07
10	-1.650E-06	-1.170E-04	0.000E-01	0.000E-01	0.000E-01	1.095E-07
11	-1.688E-06	-9.792E-05	0.000E-01	0.000E-01	0.000E-01	4.519E-07
12	-1.720E-06	-6.568E-05	0.000E-01	0.000E-01	0.000E-01	6.184E-07
13	-1.749E-06	-2.800E-05	0.000E-01	0.000E-01	0.000E-01	6.298E-07
14	-1.762E-06	-1.132E-05	0.000E-01	0.000E-01	0.000E-01	5.854E-07
15	-1.795E-06	2.350E-05	0.000E-01	0.000E-01	0.000E-01	3.305E-07
16	-1.826E-06	3.446E-05	0.000E-01	0.000E-01	0.000E-01	-6.602E-08
17	-1.844E-06	1.493E-05	0.000E-01	0.000E-01	0.000E-01	-4.122E-07
18	-1.856E-06	-1.958E-05	0.000E-01	0.000E-01	0.000E-01	-4.465E-07
19	-1.856E-06	-3.067E-05	0.000E-01	0.000E-01	0.000E-01	-3.604E-07
20	-1.856E-06	-4.418E-05	0.000E-01	0.000E-01	0.000E-01	-7.471E-08
21	-1.855E-06	-3.659E-05	0.000E-01	0.000E-01	0.000E-01	3.560E-07
22	-1.840E-06	2.141E-06	0.000E-01	0.000E-01	0.000E-01	6.864E-07
23	-1.823E-06	4.257E-05	0.000E-01	0.000E-01	0.000E-01	3.882E-07
24	-1.794E-06	4.744E-05	0.000E-01	0.000E-01	0.000E-01	-1.630E-07
25	-1.762E-06	2.641E-05	0.000E-01	0.000E-01	0.000E-01	-4.522E-07
26	-1.734E-06	3.887E-06	0.000E-01	0.000E-01	0.000E-01	-3.677E-07
27	-1.728E-06	4.699E-07	0.000E-01	0.000E-01	0.000E-01	-2.990E-07
28	-1.153E-05	3.425E-07	0.000E-01	0.000E-01	0.000E-01	-3.668E-08
29	-9.356E-06	2.222E-07	0.000E-01	0.000E-01	0.000E-01	8.182E-08
30	-3.357E-06	1.082E-07	0.000E-01	0.000E-01	0.000E-01	8.544E-08
31	0.000E-01	0.000E-01	0.000E-01	0.000E-01	0.000E-01	0.000E-01

Table A. 6

Displacements and Rotations for Natural Mode No. 6 (2-D)

Node No.	Displacements			Rotations		
	u	v	w	θ_x	θ_y	θ_z
1	0.000E-01	0.000E-01	0.000E-01	0.000E-01	0.000E-01	0.000E-01
2	2.651E-06	6.953E-08	0.000E-01	0.000E-01	0.000E-01	-6.613E-08
3	7.126E-06	1.427E-07	0.000E-01	0.000E-01	0.000E-01	-5.704E-08
4	8.164E-06	2.199E-07	0.000E-01	0.000E-01	0.000E-01	4.113E-08
5	-1.381E-07	3.015E-07	0.000E-01	0.000E-01	0.000E-01	2.364E-07
6	-1.346E-07	2.968E-06	0.000E-01	0.000E-01	0.000E-01	2.861E-07
7	-1.178E-07	2.054E-05	0.000E-01	0.000E-01	0.000E-01	3.657E-07
8	-9.861E-08	3.972E-05	0.000E-01	0.000E-01	0.000E-01	2.266E-07
9	-8.041E-08	4.642E-05	0.000E-01	0.000E-01	0.000E-01	-2.116E-08
10	-6.143E-08	3.670E-05	0.000E-01	0.000E-01	0.000E-01	-2.617E-07
11	-4.342E-08	1.477E-05	0.000E-01	0.000E-01	0.000E-01	-3.705E-07
12	-2.820E-08	-6.814E-06	0.000E-01	0.000E-01	0.000E-01	-3.365E-07
13	-1.363E-08	-2.335E-05	0.000E-01	0.000E-01	0.000E-01	-2.038E-07
14	-7.113E-09	-2.785E-05	0.000E-01	0.000E-01	0.000E-01	-1.208E-07
15	9.664E-09	-2.845E-05	0.000E-01	0.000E-01	0.000E-01	1.129E-07
16	2.562E-08	-1.280E-05	0.000E-01	0.000E-01	0.000E-01	3.137E-07
17	4.117E-08	1.257E-05	0.000E-01	0.000E-01	0.000E-01	2.911E-07
18	5.716E-08	2.161E-05	0.000E-01	0.000E-01	0.000E-01	-9.801E-08
19	6.301E-08	1.596E-05	0.000E-01	0.000E-01	0.000E-01	-2.746E-07
20	7.608E-08	-6.945E-06	0.000E-01	0.000E-01	0.000E-01	-4.047E-07
21	8.968E-08	-2.492E-05	0.000E-01	0.000E-01	0.000E-01	-9.787E-08
22	1.043E-07	-1.273E-05	0.000E-01	0.000E-01	0.000E-01	3.586E-07
23	1.196E-07	1.367E-05	0.000E-01	0.000E-01	0.000E-01	3.076E-07
24	1.323E-07	2.164E-05	0.000E-01	0.000E-01	0.000E-01	-1.368E-08
25	1.455E-07	1.348E-05	0.000E-01	0.000E-01	0.000E-01	-2.112E-07
26	1.572E-07	2.121E-06	0.000E-01	0.000E-01	0.000E-01	-1.953E-07
27	1.595E-07	2.814E-07	0.000E-01	0.000E-01	0.000E-01	-1.625E-07
28	-5.556E-06	2.053E-07	0.000E-01	0.000E-01	0.000E-01	-2.854E-08
29	-4.864E-06	1.332E-07	0.000E-01	0.000E-01	0.000E-01	3.882E-08
30	-1.311E-06	6.490E-08	0.000E-01	0.000E-01	0.000E-01	4.516E-08
31	0.000E-01	0.000E-01	0.000E-01	0.000E-01	0.000E-01	0.000E-01

Table A. 7

Displacements and Rotations for Natural Mode No. 7 (2 -D)

Node No.	Displacements			Rotations		
	u	v	w	θ_x	θ_y	θ_z
1	0.000E-01	0.000E-01	0.000E-01	0.000E-01	0.000E-01	0.000E-01
2	-2.304E-06	-5.721E-08	0.000E-01	0.000E-01	0.000E-01	5.595E-08
3	-5.921E-06	-1.174E-07	0.000E-01	0.000E-01	0.000E-01	4.246E-08
4	-6.359E-06	-1.807E-07	0.000E-01	0.000E-01	0.000E-01	-3.854E-08
5	8.265E-09	-2.474E-07	0.000E-01	0.000E-01	0.000E-01	-1.649E-07
6	7.957E-09	-2.074E-06	0.000E-01	0.000E-01	0.000E-01	-1.918E-07
7	6.448E-09	-1.289E-05	0.000E-01	0.000E-01	0.000E-01	-1.998E-07
8	4.724E-09	-2.124E-05	0.000E-01	0.000E-01	0.000E-01	-4.858E-08
9	3.087E-09	-1.865E-05	0.000E-01	0.000E-01	0.000E-01	1.331E-07
10	1.380E-09	-5.650E-06	0.000E-01	0.000E-01	0.000E-01	2.320E-07
11	-2.379E-10	9.252E-06	0.000E-01	0.000E-01	0.000E-01	1.865E-07
12	-1.601E-09	1.707E-05	0.000E-01	0.000E-01	0.000E-01	6.582E-08
13	-2.900E-09	1.713E-05	0.000E-01	0.000E-01	0.000E-01	-6.171E-08
14	-3.480E-09	1.475E-05	0.000E-01	0.000E-01	0.000E-01	-1.081E-07
15	-4.964E-09	4.653E-06	0.000E-01	0.000E-01	0.000E-01	-1.422E-07
16	-6.362E-09	-3.396E-06	0.000E-01	0.000E-01	0.000E-01	-4.866E-08
17	-7.533E-09	-1.987E-06	0.000E-01	0.000E-01	0.000E-01	6.458E-08
18	-8.612E-09	3.521E-06	0.000E-01	0.000E-01	0.000E-01	4.248E-08
19	-8.909E-09	3.974E-06	0.000E-01	0.000E-01	0.000E-01	-1.739E-09
20	-9.561E-09	1.703E-06	0.000E-01	0.000E-01	0.000E-01	-5.764E-08
21	-1.022E-08	-1.702E-06	0.000E-01	0.000E-01	0.000E-01	-3.673E-08
22	-1.061E-08	-1.751E-06	0.000E-01	0.000E-01	0.000E-01	2.420E-08
23	-1.088E-08	6.115E-07	0.000E-01	0.000E-01	0.000E-01	3.183E-08
24	-1.091E-08	1.663E-06	0.000E-01	0.000E-01	0.000E-01	4.348E-09
25	-1.081E-08	1.185E-06	0.000E-01	0.000E-01	0.000E-01	-1.646E-08
26	-1.070E-08	2.021E-07	0.000E-01	0.000E-01	0.000E-01	-1.813E-08
27	-1.067E-08	2.820E-08	0.000E-01	0.000E-01	0.000E-01	-1.565E-08
28	-6.146E-07	2.060E-08	0.000E-01	0.000E-01	0.000E-01	-3.627E-09
29	-5.695E-07	1.338E-08	0.000E-01	0.000E-01	0.000E-01	4.104E-09
30	-2.214E-07	6.522E-09	0.000E-01	0.000E-01	0.000E-01	5.378E-09
31	0.000E-01	0.000E-01	0.000E-01	0.000E-01	0.000E-01	0.000E-01

Table A. 8

Displacements and Rotations for Natural Mode No. 8 (2 -D)

Node No.	Displacements			Rotations		
	u	v	w	θ_x	θ_y	θ_z
1	0.000E-01	0.000E-01	0.000E-01	0.000E-01	0.000E-01	0.000E-01
2	-3.944E-06	-1.517E-08	0.000E-01	0.000E-01	0.000E-01	8.887E-08
3	-8.940E-06	-3.106E-08	0.000E-01	0.000E-01	0.000E-01	4.257E-08
4	-7.830E-06	-4.767E-08	0.000E-01	0.000E-01	0.000E-01	-7.414E-08
5	-6.554E-07	-6.499E-08	0.000E-01	0.000E-01	0.000E-01	-1.160E-07
6	-6.458E-07	-1.176E-06	0.000E-01	0.000E-01	0.000E-01	-1.040E-07
7	-5.976E-07	-4.703E-06	0.000E-01	0.000E-01	0.000E-01	-2.805E-08
8	-5.401E-07	-3.706E-06	0.000E-01	0.000E-01	0.000E-01	5.548E-08
9	-4.832E-07	7.371E-07	0.000E-01	0.000E-01	0.000E-01	7.492E-08
10	-4.211E-07	4.432E-06	0.000E-01	0.000E-01	0.000E-01	2.214E-08
11	-3.599E-07	3.606E-06	0.000E-01	0.000E-01	0.000E-01	-4.386E-08
12	-3.065E-07	9.481E-08	0.000E-01	0.000E-01	0.000E-01	-6.391E-08
13	-2.539E-07	-3.214E-06	0.000E-01	0.000E-01	0.000E-01	-3.793E-08
14	-2.300E-07	-3.973E-06	0.000E-01	0.000E-01	0.000E-01	-1.576E-08
15	-1.673E-07	-3.175E-06	0.000E-01	0.000E-01	0.000E-01	3.410E-08
16	-1.065E-07	3.335E-08	0.000E-01	0.000E-01	0.000E-01	4.096E-08
17	-3.563E-08	1.699E-06	0.000E-01	0.000E-01	0.000E-01	-7.302E-09
18	4.069E-08	-7.047E-07	0.000E-01	0.000E-01	0.000E-01	-2.928E-08
19	6.883E-08	-1.253E-06	0.000E-01	0.000E-01	0.000E-01	-1.264E-08
20	1.315E-07	-1.043E-06	0.000E-01	0.000E-01	0.000E-01	1.481E-08
21	1.965E-07	1.695E-07	0.000E-01	0.000E-01	0.000E-01	1.829E-08
22	2.521E-07	7.753E-07	0.000E-01	0.000E-01	0.000E-01	-5.559E-10
23	3.115E-07	5.646E-08	0.000E-01	0.000E-01	0.000E-01	-1.867E-08
24	3.349E-07	-1.216E-06	0.000E-01	0.000E-01	0.000E-01	-1.716E-08
25	3.579E-07	-1.557E-06	0.000E-01	0.000E-01	0.000E-01	8.589E-09
26	3.767E-07	-3.993E-07	0.000E-01	0.000E-01	0.000E-01	3.549E-08
27	3.904E-07	-1.704E-08	0.000E-01	0.000E-01	0.000E-01	4.037E-08
28	2.933E-06	-1.250E-08	0.000E-01	0.000E-01	0.000E-01	2.649E-08
29	3.309E-06	-8.142E-09	0.000E-01	0.000E-01	0.000E-01	-1.599E-08
30	1.456E-06	-3.976E-09	0.000E-01	0.000E-01	0.000E-01	-3.284E-08
31	0.000E-01	0.000E-01	0.000E-01	0.000E-01	0.000E-01	0.000E-01

Table A.9

Displacements and Rotations for Natural Mode No. 9 (2-D)

Node No.	Displacements			Rotations		
	u	v	w	θ_x	θ_y	θ_z
1	0.000E-01	0.000E-01	0.000E-01	0.000E-01	0.000E-01	0.000E-01
2	-1.064E-06	-4.528E-09	0.000E-01	0.000E-01	0.000E-01	2.361E-08
3	-2.344E-06	-9.271E-09	0.000E-01	0.000E-01	0.000E-01	9.644E-09
4	-1.886E-06	-1.422E-08	0.000E-01	0.000E-01	0.000E-01	-2.277E-08
5	2.120E-07	-1.938E-08	0.000E-01	0.000E-01	0.000E-01	-3.343E-08
6	2.144E-07	-3.392E-07	0.000E-01	0.000E-01	0.000E-01	-2.986E-08
7	2.257E-07	-1.338E-06	0.000E-01	0.000E-01	0.000E-01	-7.413E-09
8	2.373E-07	-9.998E-07	0.000E-01	0.000E-01	0.000E-01	1.673E-08
9	2.470E-07	2.993E-07	0.000E-01	0.000E-01	0.000E-01	2.118E-08
10	2.555E-07	1.286E-06	0.000E-01	0.000E-01	0.000E-01	4.562E-09
11	2.619E-07	9.196E-07	0.000E-01	0.000E-01	0.000E-01	-1.417E-08
12	2.658E-07	-1.389E-07	0.000E-01	0.000E-01	0.000E-01	-1.818E-08
13	2.681E-07	-1.022E-06	0.000E-01	0.000E-01	0.000E-01	-8.926E-09
14	2.687E-07	-1.178E-06	0.000E-01	0.000E-01	0.000E-01	-2.111E-09
15	2.687E-07	-7.889E-07	0.000E-01	0.000E-01	0.000E-01	1.092E-08
16	2.666E-07	9.007E-08	0.000E-01	0.000E-01	0.000E-01	8.844E-09
17	2.374E-07	2.893E-07	0.000E-01	0.000E-01	0.000E-01	-3.743E-09
18	1.930E-07	-2.294E-07	0.000E-01	0.000E-01	0.000E-01	-2.940E-09
19	1.680E-07	-2.073E-07	0.000E-01	0.000E-01	0.000E-01	2.913E-09
20	1.113E-07	1.668E-07	0.000E-01	0.000E-01	0.000E-01	5.890E-09
21	5.144E-08	2.352E-07	0.000E-01	0.000E-01	0.000E-01	-7.491E-09
22	-2.539E-08	-7.517E-07	0.000E-01	0.000E-01	0.000E-01	-1.175E-08
23	-1.065E-07	-3.943E-07	0.000E-01	0.000E-01	0.000E-01	3.141E-08
24	-1.724E-07	2.729E-06	0.000E-01	0.000E-01	0.000E-01	5.095E-08
25	-2.412E-07	4.222E-06	0.000E-01	0.000E-01	0.000E-01	-1.457E-08
26	-3.007E-07	1.178E-06	0.000E-01	0.000E-01	0.000E-01	-1.051E-07
27	-3.128E-07	2.434E-08	0.000E-01	0.000E-01	0.000E-01	-1.249E-07
28	-8.684E-06	1.786E-08	0.000E-01	0.000E-01	0.000E-01	-9.249E-08
29	-1.040E-05	1.164E-08	0.000E-01	0.000E-01	0.000E-01	4.498E-08
30	-4.685E-06	5.687E-09	0.000E-01	0.000E-01	0.000E-01	1.043E-07
31	0.000E-01	0.000E-01	0.000E-01	0.000E-01	0.000E-01	0.000E-01

Table A. 10

Displacements and Rotations for Natural Mode No.10 (2 -D)

Node No.	Displacements			Rotations		
	u	v	w	θ_x	θ_y	θ_z
1	0.000E-01	0.000E-01	0.000E-01	0.000E-01	0.000E-01	0.000E-01
2	3.186E-06	-3.336E-08	0.000E-01	0.000E-01	0.000E-01	-6.902E-08
3	6.754E-06	-6.825E-08	0.000E-01	0.000E-01	0.000E-01	-2.311E-08
4	5.209E-06	-1.046E-07	0.000E-01	0.000E-01	0.000E-01	6.133E-08
5	8.649E-07	-1.423E-07	0.000E-01	0.000E-01	0.000E-01	3.419E-08
6	8.538E-07	3.562E-08	0.000E-01	0.000E-01	0.000E-01	6.270E-09
7	7.973E-07	-1.692E-06	0.000E-01	0.000E-01	0.000E-01	-5.166E-08
8	7.283E-07	-4.241E-06	0.000E-01	0.000E-01	0.000E-01	-1.402E-08
9	6.582E-07	-3.111E-06	0.000E-01	0.000E-01	0.000E-01	4.892E-08
10	5.802E-07	1.065E-06	0.000E-01	0.000E-01	0.000E-01	5.898E-08
11	5.017E-07	3.610E-06	0.000E-01	0.000E-01	0.000E-01	7.197E-09
12	4.321E-07	2.481E-06	0.000E-01	0.000E-01	0.000E-01	-4.079E-08
13	3.628E-07	-5.281E-07	0.000E-01	0.000E-01	0.000E-01	-4.958E-08
14	3.310E-07	-1.792E-06	0.000E-01	0.000E-01	0.000E-01	-3.881E-08
15	2.469E-07	-3.021E-06	0.000E-01	0.000E-01	0.000E-01	1.132E-08
16	1.644E-07	-5.052E-07	0.000E-01	0.000E-01	0.000E-01	5.091E-08
17	6.106E-08	2.602E-06	0.000E-01	0.000E-01	0.000E-01	-1.384E-09
18	-5.194E-08	-8.447E-07	0.000E-01	0.000E-01	0.000E-01	-4.480E-08
19	-9.329E-08	-1.700E-06	0.000E-01	0.000E-01	0.000E-01	-2.015E-08
20	-1.853E-07	-1.459E-06	0.000E-01	0.000E-01	0.000E-01	2.086E-08
21	-2.804E-07	2.426E-07	0.000E-01	0.000E-01	0.000E-01	2.368E-08
22	-3.539E-07	8.252E-07	0.000E-01	0.000E-01	0.000E-01	-4.009E-09
23	-4.287E-07	-5.044E-08	0.000E-01	0.000E-01	0.000E-01	-1.554E-08
24	-4.400E-07	-7.582E-07	0.000E-01	0.000E-01	0.000E-01	-5.877E-09
25	-4.487E-07	-6.516E-07	0.000E-01	0.000E-01	0.000E-01	7.927E-09
26	-4.539E-07	-1.152E-07	0.000E-01	0.000E-01	0.000E-01	9.578E-09
27	-4.547E-07	-2.524E-08	0.000E-01	0.000E-01	0.000E-01	7.545E-09
28	-2.238E-07	-1.856E-08	0.000E-01	0.000E-01	0.000E-01	1.614E-09
29	-1.479E-07	-1.211E-08	0.000E-01	0.000E-01	0.000E-01	1.275E-09
30	-5.710E-08	-5.920E-09	0.000E-01	0.000E-01	0.000E-01	1.359E-09
31	0.000E-01	0.000E-01	0.000E-01	0.000E-01	0.000E-01	0.000E-01

Table A.11

Displacements and Rotations for Natural Mode No.1 (3 -D)

Node No.	Displacements			Rotations		
	u	v	w	θ_x	θ_y	θ_z
1	0.000E-01	0.000E-01	0.000E-01	0.000E-01	0.000E-01	0.000E-01
2	-1.094E-20	-6.103E-23	-2.422E-04	-7.208E-06	5.992E-07	2.939E-22
3	-3.375E-20	-1.253E-22	-9.035E-04	-1.324E-05	1.300E-06	3.684E-22
4	-5.195E-20	-1.933E-22	-1.892E-03	-1.752E-05	2.127E-06	1.389E-22
5	-4.274E-20	-2.653E-22	-3.073E-03	-1.926E-05	3.112E-06	-5.124E-22
6	-4.276E-20	-6.427E-21	-3.573E-03	-2.478E-05	8.255E-05	-7.106E-22
7	-4.284E-20	-6.131E-20	-7.689E-03	-2.485E-05	8.142E-05	-1.439E-21
8	-4.297E-20	-1.648E-19	-1.247E-02	-2.492E-05	7.720E-05	-1.957E-21
9	-4.307E-20	-2.905E-19	-1.693E-02	-2.498E-05	7.087E-05	-2.190E-21
10	-4.318E-20	-4.372E-19	-2.134E-02	-2.503E-05	6.231E-05	-2.211E-21
11	-4.328E-20	-5.793E-19	-2.516E-02	-2.508E-05	5.275E-05	-2.057E-21
12	-4.337E-20	-6.935E-19	-2.799E-02	-2.511E-05	4.384E-05	-1.820E-21
13	-4.345E-20	-7.918E-19	-3.030E-02	-2.514E-05	3.475E-05	-1.516E-21
14	-4.349E-20	-8.308E-19	-3.119E-02	-2.516E-05	3.055E-05	-1.360E-21
15	-4.358E-20	-9.134E-19	-3.300E-02	-2.519E-05	1.943E-05	-9.090E-22
16	-4.367E-20	-9.623E-19	-3.402E-02	-2.522E-05	8.602E-06	-4.275E-22
17	-4.376E-20	-9.740E-19	-3.422E-02	-2.524E-05	-2.993E-06	1.080E-22
18	-4.385E-20	-9.437E-19	-3.352E-02	-2.527E-05	-1.652E-05	7.280E-22
19	-4.389E-20	-9.206E-19	-3.300E-02	-2.529E-05	-2.203E-05	9.734E-22
20	-4.397E-20	-8.477E-19	-3.134E-02	-2.532E-05	-3.441E-05	1.496E-21
21	-4.405E-20	-7.449E-19	-2.894E-02	-2.535E-05	-4.738E-05	1.993E-21
22	-4.414E-20	-5.963E-19	-2.530E-02	-2.540E-05	-6.209E-05	2.458E-21
23	-4.424E-20	-4.231E-19	-2.072E-02	-2.545E-05	-7.589E-05	2.725E-21
24	-4.434E-20	-2.585E-19	-1.582E-02	-2.551E-05	-8.652E-05	2.689E-21
25	-4.444E-20	-1.078E-19	-1.038E-02	-2.558E-05	-9.369E-05	2.244E-21
26	-4.453E-20	-1.377E-20	-5.614E-03	-2.565E-05	-9.581E-05	1.442E-21
27	-4.455E-20	-4.428E-22	-4.996E-03	-3.118E-05	-4.121E-06	1.209E-21
28	3.082E-21	-3.226E-22	-3.080E-03	-2.847E-05	-2.817E-06	3.787E-22
29	1.212E-20	-2.092E-22	-1.472E-03	-2.155E-05	-1.722E-06	-2.751E-23
30	5.522E-21	-1.019E-22	-3.950E-04	-1.175E-05	-7.936E-07	-1.240E-22
31	0.000E-01	0.000E-01	0.000E-01	0.000E-01	0.000E-01	0.000E-01

Table A.12

Displacements and Rotations for Natural Mode No. 2 (3-D)

Node No.	Displacements			Rotations		
	u	v	w	θ_x	θ_y	θ_z
1	0.000E-01	0.000E-01	0.000E-01	0.000E-01	0.000E-01	0.000E-01
2	-1.556E-04	-8.494E-07	-1.003E-18	-2.976E-20	1.392E-21	4.182E-06
3	-4.810E-04	-1.744E-06	-3.723E-18	-5.425E-20	3.021E-21	5.286E-06
4	-7.456E-04	-2.690E-06	-7.754E-18	-7.107E-20	4.942E-21	2.125E-06
5	-6.295E-04	-3.692E-06	-1.251E-17	-7.703E-20	7.231E-21	-6.954E-06
6	-6.297E-04	-8.773E-05	-1.343E-17	2.707E-20	1.190E-19	-9.722E-06
7	-6.311E-04	-8.443E-04	-1.930E-17	2.838E-20	1.132E-19	-1.990E-05
8	-6.327E-04	-2.278E-03	-2.564E-17	2.971E-20	9.551E-20	-2.715E-05
9	-6.341E-04	-4.024E-03	-3.069E-17	3.093E-20	7.064E-20	-3.044E-05
10	-6.356E-04	-6.064E-03	-3.437E-17	3.187E-20	3.898E-20	-3.076E-05
11	-6.371E-04	-8.042E-03	-3.589E-17	3.275E-20	5.899E-21	-2.865E-05
12	-6.383E-04	-9.633E-03	-3.541E-17	3.342E-20	-2.287E-20	-2.536E-05
13	-6.394E-04	-1.100E-02	-3.329E-17	3.400E-20	-5.003E-20	-2.116E-05
14	-6.399E-04	-1.155E-02	-3.179E-17	3.425E-20	-6.186E-20	-1.899E-05
15	-6.413E-04	-1.270E-02	-2.630E-17	3.484E-20	-9.065E-20	-1.272E-05
16	-6.425E-04	-1.339E-02	-1.888E-17	3.534E-20	-1.153E-19	-6.028E-06
17	-6.438E-04	-1.356E-02	-9.786E-18	3.585E-20	-1.350E-19	1.422E-06
18	-6.450E-04	-1.314E-02	4.272E-19	3.644E-20	-1.455E-19	1.005E-05
19	-6.455E-04	-1.282E-02	4.378E-18	3.668E-20	-1.459E-19	1.347E-05
20	-6.466E-04	-1.181E-02	1.278E-17	3.727E-20	-1.385E-19	2.075E-05
21	-6.477E-04	-1.038E-02	2.036E-17	3.793E-20	-1.173E-19	2.769E-05
22	-6.491E-04	-8.317E-03	2.686E-17	3.881E-20	-7.863E-20	3.420E-05
23	-6.505E-04	-5.907E-03	3.039E-17	3.985E-20	-2.731E-20	3.795E-05
24	-6.518E-04	-3.612E-03	3.045E-17	4.097E-20	2.119E-20	3.750E-05
25	-6.532E-04	-1.510E-03	2.799E-17	4.230E-20	5.563E-20	3.136E-05
26	-6.544E-04	-1.934E-04	2.479E-17	4.362E-20	6.758E-20	2.024E-05
27	-6.546E-04	-6.168E-06	2.386E-17	1.477E-19	9.722E-21	1.699E-05
28	2.028E-05	-4.494E-06	1.476E-17	1.356E-19	6.645E-21	3.462E-06
29	1.574E-04	-2.914E-06	7.075E-18	1.032E-19	4.062E-21	-2.244E-07
30	7.373E-05	-1.419E-06	1.904E-18	5.653E-20	1.872E-21	-1.663E-06
31	0.000E-01	0.000E-01	0.000E-01	0.000E-01	0.000E-01	0.000E-01

Table A.13

Displacements and Rotations for Natural Mode No. 3 (3 -D)

Node No.	Displacements			Rotations		
	u	v	w	θ_x	θ_y	θ_z
1	0.000E-01	0.000E-01	0.000E-01	0.000E-01	0.000E-01	0.000E-01
2	1.891E-04	-2.870E-08	-2.530E-18	-7.504E-20	2.876E-21	-5.538E-06
3	6.856E-04	-5.895E-08	-9.384E-18	-1.366E-19	6.240E-21	-9.696E-06
4	1.384E-03	-9.090E-08	-1.953E-17	-1.788E-19	1.021E-20	-1.188E-05
5	2.135E-03	-1.248E-07	-3.150E-17	-1.942E-19	1.494E-20	-1.127E-05
6	2.135E-03	-1.101E-04	-3.323E-17	-3.770E-20	1.942E-19	-1.073E-05
7	2.136E-03	-5.886E-04	-4.274E-17	-3.573E-20	1.902E-19	-8.387E-06
8	2.137E-03	-1.018E-03	-5.252E-17	-3.373E-20	1.400E-19	-5.912E-06
9	2.138E-03	-1.309E-03	-5.943E-17	-3.203E-20	8.631E-20	-3.758E-06
10	2.138E-03	-1.490E-03	-6.311E-17	-3.048E-20	2.265E-20	-1.719E-06
11	2.139E-03	-1.546E-03	-6.263E-17	-2.916E-20	-3.782E-20	4.962E-09
12	2.140E-03	-1.508E-03	-5.904E-17	-2.816E-20	-8.477E-20	1.295E-06
13	2.140E-03	-1.400E-03	-5.292E-17	-2.728E-20	-1.235E-19	2.379E-06
14	2.141E-03	-1.330E-03	-4.937E-17	-2.691E-20	-1.386E-19	2.817E-06
15	2.141E-03	-1.091E-03	-3.822E-17	-2.603E-20	-1.694E-19	3.795E-06
16	2.142E-03	-7.899E-04	-2.527E-17	-2.527E-20	-1.884E-19	4.536E-06
17	2.142E-03	-4.418E-04	-1.130E-17	-2.451E-20	-1.964E-19	5.054E-06
18	2.142E-03	-6.755E-05	2.739E-18	-2.362E-20	-1.899E-19	5.236E-06
19	2.142E-03	7.368E-05	7.791E-18	-2.325E-20	-1.831E-19	5.179E-06
20	2.142E-03	3.674E-04	1.790E-17	-2.238E-20	-1.603E-19	4.762E-06
21	2.142E-03	6.224E-04	2.629E-17	-2.137E-20	-1.240E-19	3.847E-06
22	2.141E-03	8.238E-04	3.269E-17	-2.005E-20	-6.977E-20	2.171E-06
23	2.141E-03	8.902E-04	3.518E-17	-1.849E-20	-5.786E-21	-2.536E-07
24	2.140E-03	7.897E-04	3.367E-17	-1.680E-20	5.104E-20	-3.091E-06
25	2.139E-03	5.038E-04	2.924E-17	-1.480E-20	9.046E-20	-6.432E-06
26	2.138E-03	1.007E-04	2.425E-17	-1.283E-20	1.037E-19	-9.683E-06
27	2.138E-03	5.792E-08	2.308E-17	1.437E-19	1.132E-20	-1.044E-05
28	1.414E-03	4.219E-08	1.423E-17	1.317E-19	7.734E-21	-1.178E-05
29	7.095E-04	2.736E-08	6.789E-18	9.956E-20	4.728E-21	-9.909E-06
30	1.976E-04	1.332E-08	1.818E-18	5.414E-20	2.179E-21	-5.755E-06
31	0.000E-01	0.000E-01	0.000E-01	0.000E-01	0.000E-01	0.000E-01

Table A. 14

Displacements and Rotations for Natural Mode No. 4 (3 -D)

Node No.	Displacements			Rotations		
	u	v	w	θ_x	θ_y	θ_z
1	0.000E-01	0.000E-01	0.000E-01	0.000E-01	0.000E-01	0.000E-01
2	-1.786E-17	-1.590E-19	-5.727E-05	-1.700E-06	7.996E-08	4.854E-19
3	-5.651E-17	-3.266E-19	-2.126E-04	-3.099E-06	1.735E-07	6.507E-19
4	-9.228E-17	-5.035E-19	-4.429E-04	-4.060E-06	2.838E-07	3.857E-19
5	-9.370E-17	-6.908E-19	-7.148E-04	-4.401E-06	4.153E-07	-4.490E-19
6	-9.373E-17	-6.555E-18	-7.678E-04	1.498E-06	6.895E-06	-6.992E-19
7	-9.386E-17	-6.353E-17	-1.107E-03	1.572E-06	6.552E-06	-1.461E-18
8	-9.400E-17	-1.617E-16	-1.475E-03	1.648E-06	5.544E-06	-1.686E-18
9	-9.413E-17	-2.581E-16	-1.768E-03	1.711E-06	4.122E-06	-1.440E-18
10	-9.426E-17	-3.374E-16	-1.984E-03	1.770E-06	2.312E-06	-9.078E-19
11	-9.439E-17	-3.782E-16	-2.077E-03	1.820E-06	4.197E-07	-3.106E-19
12	-9.449E-17	-3.822E-16	-2.054E-03	1.858E-06	-1.227E-06	1.727E-19
13	-9.458E-17	-3.601E-16	-1.938E-03	1.891E-06	-2.783E-06	5.744E-19
14	-9.462E-17	-3.424E-16	-1.854E-03	1.905E-06	-3.461E-06	7.318E-19
15	-9.473E-17	-2.769E-16	-1.545E-03	1.938E-06	-5.113E-06	1.075E-18
16	-9.482E-17	-1.899E-16	-1.126E-03	1.967E-06	-6.530E-06	1.337E-18
17	-9.487E-17	-8.415E-17	-6.100E-04	1.995E-06	-7.666E-06	1.613E-18
18	-9.489E-17	4.347E-17	-2.927E-05	2.029E-06	-8.292E-06	1.905E-18
19	-9.488E-17	9.637E-17	1.958E-04	2.043E-06	-8.313E-06	1.960E-18
20	-9.485E-17	2.087E-16	6.753E-04	2.076E-06	-7.916E-06	1.763E-18
21	-9.482E-17	2.939E-16	1.109E-03	2.114E-06	-6.734E-06	1.024E-18
22	-9.472E-17	3.210E-16	1.484E-03	2.163E-06	-4.562E-06	-1.434E-19
23	-9.462E-17	2.745E-16	1.692E-03	2.222E-06	-1.672E-06	-1.182E-18
24	-9.447E-17	1.817E-16	1.703E-03	2.286E-06	1.064E-06	-1.762E-18
25	-9.430E-17	7.401E-17	1.572E-03	2.361E-06	3.007E-06	-1.655E-18
26	-9.415E-17	7.971E-18	1.398E-03	2.436E-06	3.682E-06	-8.366E-19
27	-9.412E-17	8.613E-19	1.346E-03	8.335E-06	5.452E-07	-5.546E-19
28	-9.555E-17	6.274E-19	8.327E-04	7.653E-06	3.726E-07	3.828E-19
29	-5.875E-17	4.068E-19	3.992E-04	5.825E-06	2.278E-07	6.759E-19
30	-1.855E-17	1.981E-19	1.074E-04	3.190E-06	1.050E-07	5.048E-19
31	0.000E-01	0.000E-01	0.000E-01	0.000E-01	0.000E-01	0.000E-01

Table A.15

Displacements and Rotations for Natural Mode No. 5 (3-D)

Node No.	Displacements			Rotations		
	u	v	w	θ_x	θ_y	θ_z
1	0.000E-01	0.000E-01	0.000E-01	0.000E-01	0.000E-01	0.000E-01
2	-3.057E-05	-2.078E-07	7.850E-16	2.166E-17	2.003E-18	8.355E-07
3	-9.764E-05	-4.267E-07	2.570E-15	3.177E-17	4.346E-18	1.141E-06
4	-1.616E-04	-6.579E-07	4.604E-15	3.078E-17	7.110E-18	7.164E-07
5	-1.680E-04	-9.031E-07	6.389E-15	2.713E-17	1.040E-17	-7.083E-07
6	-1.681E-04	-1.034E-05	5.068E-15	-5.104E-17	1.704E-16	-1.146E-06
7	-1.683E-04	-1.082E-04	-3.281E-15	-5.202E-17	1.580E-16	-2.614E-06
8	-1.685E-04	-2.926E-04	-1.172E-14	-5.302E-17	1.159E-16	-3.354E-06
9	-1.688E-04	-4.968E-04	-1.699E-14	-5.386E-17	5.477E-17	-3.309E-06
10	-1.690E-04	-6.981E-04	-1.834E-14	-5.465E-17	-1.515E-17	-2.655E-06
11	-1.692E-04	-8.425E-04	-1.545E-14	-5.530E-17	-6.938E-17	-1.621E-06
12	-1.694E-04	-9.075E-04	-1.049E-14	-5.581E-17	-9.484E-17	-5.398E-07
13	-1.696E-04	-9.072E-04	-4.729E-15	-5.625E-17	-9.595E-17	5.910E-07
14	-1.696E-04	-8.844E-04	-2.193E-15	-5.643E-17	-8.886E-17	1.111E-06
15	-1.698E-04	-7.578E-04	3.075E-15	-5.687E-17	-5.000E-17	2.427E-06
16	-1.700E-04	-5.407E-04	4.766E-15	-5.725E-17	8.489E-18	3.605E-06
17	-1.701E-04	-2.441E-04	2.100E-15	-5.763E-17	5.370E-17	4.490E-06
18	-1.701E-04	9.548E-05	-2.010E-15	-5.807E-17	4.523E-17	4.741E-06
19	-1.700E-04	2.226E-04	-3.000E-15	-5.826E-17	2.847E-17	4.607E-06
20	-1.700E-04	4.747E-04	-3.560E-15	-5.870E-17	-7.761E-18	3.858E-06
21	-1.699E-04	6.607E-04	-2.079E-15	-5.920E-17	-4.004E-17	2.341E-06
22	-1.696E-04	7.374E-04	1.095E-15	-5.986E-17	-4.072E-17	2.846E-08
23	-1.694E-04	6.558E-04	1.765E-15	-6.064E-17	3.715E-17	-2.430E-06
24	-1.691E-04	4.493E-04	-3.807E-15	-6.148E-17	1.375E-16	-4.088E-06
25	-1.687E-04	1.910E-04	-1.426E-14	-6.248E-17	1.997E-16	-4.089E-06
26	-1.684E-04	2.216E-05	-2.480E-14	-6.346E-17	2.151E-16	-2.283E-06
27	-1.683E-04	2.209E-06	-2.637E-14	-1.416E-16	1.191E-17	-1.629E-06
28	-1.921E-04	1.610E-06	-1.747E-14	-1.399E-16	8.142E-18	5.931E-07
29	-1.229E-04	1.044E-06	-9.029E-15	-1.214E-16	4.977E-18	1.360E-06
30	-3.961E-05	5.083E-07	-2.598E-15	-7.417E-17	2.294E-18	1.066E-06
31	0.000E-01	0.000E-01	0.000E-01	0.000E-01	0.000E-01	0.000E-01

Table A.16

Displacements and Rotations for Natural Mode No. 6 (3 -D)

Node No.	Displacements			Rotations		
	u	v	w	θ_x	θ_y	θ_z
1	0.000E-01	0.000E-01	0.000E-01	0.000E-01	0.000E-01	0.000E-01
2	-3.801E-14	-9.315E-16	-3.564E-05	-1.054E-06	2.744E-08	9.538E-16
3	-1.032E-13	-1.912E-15	-1.316E-04	-1.907E-06	5.953E-08	8.476E-16
4	-1.206E-13	-2.947E-15	-2.727E-04	-2.480E-06	9.739E-08	-5.520E-16
5	-2.115E-15	-4.041E-15	-4.387E-04	-2.695E-06	1.425E-07	-3.438E-15
6	-2.172E-15	-4.291E-14	-4.520E-04	-2.254E-06	8.726E-07	-4.192E-15
7	-2.445E-15	-3.057E-13	-4.931E-04	-2.249E-06	7.067E-07	-5.632E-15
8	-2.755E-15	-6.168E-13	-5.240E-04	-2.243E-06	2.715E-07	-4.086E-15
9	-3.047E-15	-7.740E-13	-5.252E-04	-2.238E-06	-2.602E-07	-8.606E-16
10	-3.349E-15	-7.144E-13	-4.897E-04	-2.234E-06	-8.177E-07	2.606E-15
11	-3.634E-15	-4.637E-13	-4.207E-04	-2.230E-06	-1.258E-06	4.647E-15
12	-3.873E-15	-1.744E-13	-3.388E-04	-2.227E-06	-1.513E-06	4.871E-15
13	-4.100E-15	8.776E-14	-2.460E-04	-2.225E-06	-1.628E-06	3.751E-15
14	-4.201E-15	1.793E-13	-2.017E-04	-2.224E-06	-1.635E-06	2.896E-15
15	-4.459E-15	2.958E-13	-8.655E-05	-2.221E-06	-1.516E-06	1.187E-16
16	-4.703E-15	2.022E-13	1.391E-05	-2.219E-06	-1.229E-06	-2.756E-15
17	-4.912E-15	-6.169E-14	8.708E-05	-2.217E-06	-7.644E-07	-3.510E-15
18	-5.111E-15	-2.229E-13	1.186E-04	-2.215E-06	-9.191E-08	-1.989E-16
19	-5.173E-15	-1.994E-13	1.170E-04	-2.214E-06	1.900E-07	1.558E-15
20	-5.310E-15	-3.133E-14	8.845E-05	-2.211E-06	7.434E-07	3.319E-15
21	-5.450E-15	1.370E-13	3.066E-05	-2.208E-06	1.182E-06	1.479E-15
22	-5.569E-15	1.004E-13	-5.850E-05	-2.204E-06	1.431E-06	-1.877E-15
23	-5.689E-15	-5.509E-14	-1.508E-04	-2.200E-06	1.267E-06	-1.937E-15
24	-5.752E-15	-1.121E-13	-2.151E-04	-2.195E-06	8.988E-07	-1.016E-16
25	-5.816E-15	-7.411E-14	-2.592E-04	-2.190E-06	6.093E-07	1.106E-15
26	-5.870E-15	-1.205E-14	-2.858E-04	-2.184E-06	4.968E-07	1.097E-15
27	-5.891E-15	-1.646E-15	-2.828E-04	-1.743E-06	-6.467E-08	9.259E-16
28	2.812E-14	-1.201E-15	-1.756E-04	-1.599E-06	-4.420E-08	1.962E-16
29	2.624E-14	-7.794E-16	-8.466E-05	-1.227E-06	-2.702E-08	-1.944E-16
30	1.003E-14	-3.798E-16	-2.291E-05	-6.779E-07	-1.245E-08	-2.466E-16
31	0.000E-01	0.000E-01	0.000E-01	0.000E-01	0.000E-01	0.000E-01

Table A.17

Displacements and Rotations for Natural Mode No. 7 (3-D)

Node No.	Displacements			Rotations		
	u	v	w	θ_x	θ_y	θ_z
1	0.000E-01	0.000E-01	0.000E-01	0.000E-01	0.000E-01	0.000E-01
2	-1.162E-11	-3.048E-13	-2.183E-05	-6.409E-07	5.290E-09	2.897E-13
3	-3.121E-11	-6.256E-13	-7.958E-05	-1.135E-06	1.149E-08	2.495E-13
4	-3.573E-11	-9.640E-13	-1.625E-04	-1.441E-06	1.878E-08	-1.806E-13
5	6.193E-13	-1.322E-12	-2.590E-04	-1.541E-06	2.747E-08	-1.034E-12
6	6.043E-13	-1.298E-11	-2.574E-04	-2.780E-07	-7.638E-07	-1.251E-12
7	5.314E-13	-8.974E-11	-2.183E-04	-2.621E-07	-8.179E-07	-1.595E-12
8	4.483E-13	-1.732E-10	-1.665E-04	-2.460E-07	-9.094E-07	-9.825E-13
9	3.695E-13	-2.019E-10	-1.102E-04	-2.324E-07	-9.510E-07	1.026E-13
10	2.871E-13	-1.588E-10	-4.837E-05	-2.198E-07	-8.965E-07	1.150E-12
11	2.091E-13	-6.280E-11	6.457E-06	-2.091E-07	-7.371E-07	1.618E-12
12	1.431E-13	3.121E-11	4.404E-05	-2.010E-07	-5.276E-07	1.461E-12
13	7.992E-14	1.028E-10	6.808E-05	-1.939E-07	-2.787E-07	8.766E-13
14	5.166E-14	1.220E-10	7.404E-05	-1.910E-07	-1.570E-07	5.134E-13
15	-2.111E-14	1.227E-10	7.408E-05	-1.838E-07	1.646E-07	-5.026E-13
16	-9.031E-14	5.507E-11	5.162E-05	-1.777E-07	4.606E-07	-1.366E-12
17	-1.579E-13	-5.495E-11	9.927E-06	-1.716E-07	6.395E-07	-1.258E-12
18	-2.275E-13	-9.352E-11	-3.566E-05	-1.644E-07	5.546E-07	4.344E-13
19	-2.530E-13	-6.877E-11	-4.932E-05	-1.615E-07	4.460E-07	1.199E-12
20	-3.100E-13	3.090E-11	-6.659E-05	-1.544E-07	1.228E-07	1.758E-12
21	-3.693E-13	1.088E-10	-6.096E-05	-1.463E-07	-3.348E-07	4.186E-13
22	-4.331E-13	5.522E-11	-2.039E-05	-1.356E-07	-8.198E-07	-1.568E-12
23	-5.001E-13	-6.008E-11	4.241E-05	-1.230E-07	-9.943E-07	-1.342E-12
24	-5.556E-13	-9.473E-11	1.009E-04	-1.094E-07	-9.458E-07	6.227E-14
25	-6.139E-13	-5.896E-11	1.553E-04	-9.327E-08	-8.692E-07	9.242E-13
26	-6.649E-13	-9.269E-12	1.973E-04	-7.736E-08	-8.254E-07	8.540E-13
27	-6.753E-13	-1.229E-12	1.989E-04	1.185E-06	1.563E-08	7.103E-13
28	2.429E-11	-8.967E-13	1.254E-04	1.111E-06	1.068E-08	1.245E-13
29	2.126E-11	-5.819E-13	6.143E-05	8.759E-07	6.529E-09	-1.698E-13
30	7.912E-12	-2.835E-13	1.686E-05	4.948E-07	3.009E-09	-1.973E-13
31	0.000E-01	0.000E-01	0.000E-01	0.000E-01	0.000E-01	0.000E-01

Table A. 18

Displacements and Rotations for Natural Mode No. 8 (3 -D)

Node No.	Displacements			Rotations		
	u	v	w	θ_x	θ_y	θ_z
1	0.000E-01	0.000E-01	0.000E-01	0.000E-01	0.000E-01	0.000E-01
2	-6.501E-06	-1.187E-07	7.859E-11	2.233E-12	9.229E-14	1.654E-07
3	-1.806E-05	-2.436E-07	2.709E-10	3.603E-12	2.002E-13	1.556E-07
4	-2.174E-05	-3.757E-07	5.189E-10	4.066E-12	3.276E-13	-8.950E-08
5	-2.623E-07	-5.156E-07	7.748E-10	4.046E-12	4.792E-13	-6.485E-07
6	-2.761E-07	-7.880E-06	7.095E-10	-1.157E-12	9.186E-12	-8.059E-07
7	-3.433E-07	-6.147E-05	2.581E-10	-1.223E-12	8.608E-12	-1.249E-06
8	-4.195E-07	-1.403E-04	-2.083E-10	-1.289E-12	6.349E-12	-1.283E-06
9	-4.914E-07	-2.100E-04	-5.168E-10	-1.345E-12	3.471E-12	-9.704E-07
10	-5.660E-07	-2.577E-04	-6.310E-10	-1.397E-12	-7.662E-14	-4.281E-07
11	-6.365E-07	-2.672E-04	-5.300E-10	-1.441E-12	-2.805E-12	1.542E-07
12	-6.958E-07	-2.447E-04	-3.220E-10	-1.474E-12	-4.032E-12	6.050E-07
13	-7.524E-07	-1.990E-04	-7.789E-11	-1.504E-12	-3.988E-12	9.350E-07
14	-7.776E-07	-1.721E-04	2.635E-11	-1.516E-12	-3.576E-12	1.040E-06
15	-8.425E-07	-9.131E-05	2.221E-10	-1.545E-12	-1.487E-12	1.152E-06
16	-9.041E-07	-1.033E-05	2.299E-10	-1.570E-12	1.527E-12	1.043E-06
17	-9.634E-07	5.429E-05	2.076E-11	-1.596E-12	3.542E-12	6.856E-07
18	-1.024E-06	8.154E-05	-2.189E-10	-1.625E-12	2.237E-12	3.601E-08
19	-1.047E-06	7.836E-05	-2.612E-10	-1.637E-12	9.701E-13	-2.426E-07
20	-1.097E-06	4.827E-05	-2.392E-10	-1.667E-12	-1.325E-12	-7.189E-07
21	-1.150E-06	-3.045E-06	-8.774E-11	-1.700E-12	-3.368E-12	-9.573E-07
22	-1.209E-06	-6.576E-05	1.543E-10	-1.744E-12	-3.092E-12	-8.436E-07
23	-1.271E-06	-1.038E-04	2.318E-10	-1.796E-12	1.688E-12	-2.037E-07
24	-1.327E-06	-9.117E-05	-6.926E-11	-1.852E-12	7.686E-12	5.271E-07
25	-1.387E-06	-4.627E-05	-6.628E-10	-1.918E-12	1.137E-11	8.451E-07
26	-1.439E-06	-6.505E-06	-1.267E-09	-1.984E-12	1.236E-11	6.326E-07
27	-1.450E-06	-6.532E-07	-1.361E-09	-7.187E-12	7.242E-13	5.145E-07
28	1.587E-05	-4.760E-07	-9.077E-10	-7.168E-12	4.950E-13	7.888E-08
29	1.354E-05	-3.087E-07	-4.723E-10	-6.305E-12	3.026E-13	-1.138E-07
30	4.918E-06	-1.503E-07	-1.366E-10	-3.889E-12	1.395E-13	-1.246E-07
31	0.000E-01	0.000E-01	0.000E-01	0.000E-01	0.000E-01	0.000E-01

Table A.19

Displacements and Rotations for Natural Mode No.9 (3 -D)

Node No.	Displacements			Rotations		
	u	v	w	θ_x	θ_y	θ_z
1	0.000E-01	0.000E-01	0.000E-01	0.000E-01	0.000E-01	0.000E-01
2	8.049E-10	2.123E-11	-1.090E-05	-3.160E-07	-4.895E-09	-2.006E-11
3	2.161E-09	4.358E-11	-3.889E-05	-5.409E-07	-1.062E-08	-1.724E-11
4	2.470E-09	6.715E-11	-7.761E-05	-6.601E-07	-1.737E-08	1.259E-11
5	-5.225E-11	9.207E-11	-1.207E-04	-6.931E-07	-2.542E-08	7.165E-11
6	-5.122E-11	8.999E-10	-1.157E-04	-6.667E-07	-9.374E-07	8.644E-11
7	-4.619E-11	6.210E-09	-6.906E-05	-6.664E-07	-9.181E-07	1.101E-10
8	-4.046E-11	1.195E-08	-1.634E-05	-6.661E-07	-8.132E-07	6.703E-11
9	-3.502E-11	1.386E-08	2.733E-05	-6.658E-07	-6.166E-07	-8.726E-12
10	-2.934E-11	1.076E-08	5.939E-05	-6.655E-07	-3.351E-07	-8.147E-11
11	-2.394E-11	4.000E-09	7.218E-05	-6.653E-07	-4.697E-08	-1.133E-10
12	-1.938E-11	-2.560E-09	6.844E-05	-6.651E-07	1.677E-07	-1.015E-10
13	-1.501E-11	-7.497E-09	5.392E-05	-6.650E-07	3.132E-07	-5.973E-11
14	-1.305E-11	-8.796E-09	4.479E-05	-6.649E-07	3.539E-07	-3.400E-11
15	-8.010E-12	-8.754E-09	1.769E-05	-6.648E-07	3.690E-07	3.755E-11
16	-3.210E-12	-3.783E-09	-6.241E-06	-6.646E-07	2.660E-07	9.770E-11
17	1.538E-12	4.024E-09	-1.890E-05	-6.645E-07	7.089E-08	8.836E-11
18	6.455E-12	6.628E-09	-1.501E-05	-6.644E-07	-1.685E-07	-3.345E-11
19	8.285E-12	4.792E-09	-9.184E-06	-6.643E-07	-2.423E-07	-8.803E-11
20	1.237E-11	-2.446E-09	7.729E-06	-6.641E-07	-2.909E-07	-1.269E-10
21	1.663E-11	-8.012E-09	2.201E-05	-6.640E-07	-1.484E-07	-2.834E-11
22	2.128E-11	-3.964E-09	2.181E-05	-6.638E-07	1.436E-07	1.163E-10
23	2.616E-11	4.536E-09	2.585E-06	-6.635E-07	4.216E-07	9.848E-11
24	3.030E-11	7.053E-09	-2.939E-05	-6.632E-07	6.168E-07	-5.287E-12
25	3.465E-11	4.375E-09	-7.017E-05	-6.629E-07	7.172E-07	-6.876E-11
26	3.845E-11	6.865E-10	-1.068E-04	-6.625E-07	7.358E-07	-6.329E-11
27	3.923E-11	9.082E-11	-1.107E-04	-6.361E-07	2.025E-08	-5.262E-11
28	-1.807E-09	6.624E-11	-7.115E-05	-6.054E-07	1.384E-08	-9.144E-12
29	-1.577E-09	4.299E-11	-3.565E-05	-4.959E-07	8.461E-09	1.263E-11
30	-5.866E-10	2.094E-11	-9.986E-06	-2.896E-07	3.900E-09	1.464E-11
31	0.000E-01	0.000E-01	0.000E-01	0.000E-01	0.000E-01	0.000E-01

Table A.20

Displacements and Rotations for Natural Mode No. 10 (3 -D)

Node No.	Displacements			Rotations		
	u	v	w	θ_x	θ_y	θ_z
1	0.000E-01	0.000E-01	0.000E-01	0.000E-01	0.000E-01	0.000E-01
2	-4.425E-06	-9.607E-08	7.566E-08	2.150E-09	8.895E-11	1.123E-07
3	-1.227E-05	-1.972E-07	2.608E-07	3.468E-09	1.930E-10	1.059E-07
4	-1.493E-05	-3.041E-07	4.994E-07	3.913E-09	3.157E-10	-5.372E-08
5	-1.480E-06	-4.172E-07	7.457E-07	3.893E-09	4.619E-10	-4.057E-07
6	-1.488E-06	-5.029E-06	6.829E-07	-1.082E-09	8.845E-09	-5.017E-07
7	-1.527E-06	-3.752E-05	2.482E-07	-1.145E-09	8.287E-09	-7.264E-07
8	-1.570E-06	-8.040E-05	-2.007E-07	-1.209E-09	6.302E-09	-6.302E-07
9	-1.610E-06	-1.099E-04	-4.975E-07	-1.262E-09	3.338E-09	-3.105E-07
10	-1.651E-06	-1.170E-04	-6.071E-07	-1.312E-09	-7.837E-11	1.091E-07
11	-1.689E-06	-9.796E-05	-5.097E-07	-1.354E-09	-2.703E-09	4.515E-07
12	-1.721E-06	-6.574E-05	-3.094E-07	-1.386E-09	-3.881E-09	6.182E-07
13	-1.750E-06	-2.806E-05	-7.455E-08	-1.414E-09	-3.835E-09	6.299E-07
14	-1.764E-06	-1.138E-05	2.567E-08	-1.425E-09	-3.437E-09	5.856E-07
15	-1.796E-06	2.347E-05	2.137E-07	-1.454E-09	-1.426E-09	3.309E-07
16	-1.827E-06	3.446E-05	2.208E-07	-1.478E-09	1.472E-09	-6.553E-08
17	-1.845E-06	1.496E-05	1.966E-08	-1.502E-09	3.404E-09	-4.119E-07
18	-1.858E-06	-1.956E-05	-2.102E-07	-1.530E-09	2.139E-09	-4.470E-07
19	-1.858E-06	-3.066E-05	-2.506E-07	-1.542E-09	9.192E-10	-3.611E-07
20	-1.857E-06	-4.423E-05	-2.286E-07	-1.570E-09	-1.474E-09	-7.546E-08
21	-1.856E-06	-3.666E-05	-8.317E-08	-1.602E-09	-3.222E-09	3.560E-07
22	-1.841E-06	2.121E-06	1.477E-07	-1.644E-09	-2.942E-09	6.875E-07
23	-1.824E-06	4.263E-05	2.209E-07	-1.693E-09	1.617E-09	3.890E-07
24	-1.795E-06	4.751E-05	-6.623E-08	-1.747E-09	7.326E-09	-1.631E-07
25	-1.763E-06	2.645E-05	-6.318E-07	-1.810E-09	1.083E-08	-4.529E-07
26	-1.735E-06	3.894E-06	-1.208E-06	-1.873E-09	1.178E-08	-3.683E-07
27	-1.729E-06	4.707E-07	-1.297E-06	-6.849E-09	6.890E-10	-2.995E-07
28	-1.155E-05	3.431E-07	-8.648E-07	-6.831E-09	4.709E-10	-3.676E-08
29	-9.371E-06	2.226E-07	-4.499E-07	-6.007E-09	2.878E-10	8.194E-08
30	-3.363E-06	1.084E-07	-1.301E-07	-3.704E-09	1.327E-10	8.558E-08
31	0.000E-01	0.000E-01	0.000E-01	0.000E-01	0.000E-01	0.000E-01

APPENDIX B

Numerical Evaluation of a Monotube Structure

B.1. Example Structure

The base structure of the project will be used in this numerical evaluation. The details of the dimensions of the structure are shown in Figure 4.1.

B.2. Modeling of the Structure

The structure of Figure 4.1 was idealized and modeled for a finite element analysis using the computer program GIFTS. The frame was discretized as an assemblage of thirty beam elements, as shown in Figure 4.5. This has been considered adequate for this type of structure. In general, the number of elements should be selected such that the length of each element is between 4 and 6 feet. Using a larger number of elements will increase the computational time and cost with only very slight improvement in the accuracy of the calculated stresses and deflections. For other discussions regarding the modeling technique, reference may be made to Section 4.2 of the report. The data on the element dimensions and properties are given in Table B.1.

B.3. Load Data

The structure was analyzed for the static loads due to the self weight of the structure with signs, ice loads and wind pressure. Thus, the structure has been subjected to gravity loads due to self weight of the structure with signs, i.e., dead loads and ice; and the wind pressure has induced out-of-plane loads. The common way of computing these loads is as follows:

B.3.1. Computation of dead loads:

The weight of each element of the finite element model (see Fig. 4.5) was calculated on the basis of a specific weight of 490 lb/cu. ft. for steel. The weight of each element has been considered equally shared between the two end nodes. These gave the total dead load at any node due to the addition of tributary loads from the adjacent elements. The loads from the signs were determined, assuming a uniform weight of 10 lb/sq. ft. surface area, with the

TABLE B.1. Data on Elements

Element No.	Element Nodes Node 1	Element Nodes Node 2	Element Length (ins)	Element Diameter (ins) Node 1	Element Diameter (ins) Node 2	Average Element Diameter (ins)	Average Cross Sectional Area of Element (in^2)	Average Moment of Inertia of Element (in^4)
1	1	2	63	15.0	14.265	14.6325	8.509	221.97
2	30	31	63	14.265	15.0	14.6325	8.509	221.97
3	2	3	63	14.265	13.53	13.8975	8.076	189.78
4	29	30	63	13.53	14.265	13.8975	8.076	189.78
5	3	4	63	13.53	12.795	13.1625	7.643	160.87
6	28	29	63	12.759	13.53	13.1625	7.643	160.87
7	4	5	63	12.795	12.06	12.4275	7.201	135.05
8	27	28	63	12.06	12.795	12.4275	7.201	135.05
9	6	7	50	11.11	11.6933	11.4	6.605	103.82
10	25	26	50	11.6933	11.11	11.4	6.605	103.82
11	7	8	60	11.6933	12.3933	12.044	6.984	122.75
12	24	25	60	12.3933	11.6933	12.044	6.984	122.75
13	8	9	60	12.3933	13.0933	12.7434	7.396	145.78
14	23	24	60	13.0933	12.3933	12.7434	7.396	145.78
15	9	10	66	13.0933	13.8633	13.4783	7.829	172.90
16	22	23	66	13.8633	13.0933	13.4783	7.829	172.90
17	10	11	66	13.8633	14.6333	14.2483	8.283	204.73
18	21	22	66	14.6333	13.8633	14.2483	8.283	204.73
19	11	12	58.5	14.6333	15.3158	14.9746	8.710	238.11
20	20	21	58.5	15.3158	14.6333	14.9746	8.710	238.11
21	12	13	58.5	15.3158	15.9983	15.6571	9.112	272.62
22	19	20	58.5	15.9983	15.3158	15.6571	9.112	272.62
23	13	14	27.0	15.9983	16.3133	16.1558	9.406	299.85
24	18	19	27.0	16.3133	15.9983	16.1558	9.406	299.85
25	14	15	72.0	16.3133	17.1533	16.7334	9.748	333.62
26	17	18	72	17.1533	16.3133	16.7334	9.748	333.62
27	15	±6	72	17.1533	18.0	17.5767	10.243	387.21
28	16	17	72	18.0	17.1533	17.5767	10.243	387.21

NOTE: Wall thickness of the tubes = 3/16 inch (constant).

Connection Elements 29 and 30

Element No.	Element Cross Section	Element Nodes Node 1	Element Nodes Node 2	Element Length (ins)	Cross-Sectional Area of Element (in^2)	Moment of Inertia About Strong Axis (in^4)	Moment of Inertia About Weak Axis (in^4)
29	6.434 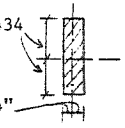	5	6	10.0	6.434	88.78	0.134
30	1/4"	26	27				

resultant acting at the nodes where the signs are connected to the beams. Sample calculations for the dead load at node 16 (see Fig. 4.5) are given as follows:

Average cross-sectional area of elements 27 and 28 = 10.243 in^2

Length of elements 27 and 28 = 72 in.

Surface area of 4' x 5' sign supported at node 16 = 20 ft^2

Dead load due to self-weight of elements = 210 lbs.

Total dead load at node 16 = 410 lbs.

The nodal dead loads of the structure are given in Table 4.1.

B.3.2. Computation of ice load:

An ice load of 3 lb/sq. ft. of the actual area of the structural members and the signs was assumed to act on the structure. The ice loads were also considered acting as nodal loads obtained from the load on the tributary area of each of the nodes. Sample calculations for the ice load at node 16 (see Fig. 4.5) are given as follows:

Average diameter of elements 27 and 28 = 17.58 in.

Length of elements 27 and 28 = 72 in.

Total surface area of 4' x 5' sign supported at node 16 = 40 ft^2

Ice load from elements 27 and 28 = 84 lbs.

Ice load from the sign = 40 x 3 = 120 lbs.

The nodal ice loads of the structure are given in Table 4.1.

B.3.3. Computation of wind load

The wind loads on the structure were computed for a constant wind velocity of 70 mph, blowing perpendicular to the plane of the frame. The statically equivalent wind loads have been calculated as nodal loads, based on the tributary areas of the monotube members and the signs, as per the Specifications (1).

Due to the asymmetry of the structure with respect to the signs, the wind loads resulting from the wind blowing in two opposite directions were considered. The sample calculations for nodal wind loads at node 16 are presented as follows:

Wind speed = 70 mph [see Fig. 1.2.4B of the Specifications (1)]

$P = 0.00256\ (1.3V)^2\ C_d\ C_h$ [see Sec. 1.2.5 of the Specifications (1)] where:

P = wind pressure, lb/sq. ft.

V = wind speed = 70 mph

C_h = coefficient for height above ground, measured to the centroid of the corresponding limits of the loaded area = 1 [see Table 1.2.5B of the Specifications (1)]

C_d = drag coefficient, calculated as follows:

d = diameter of member (ft) = average diameter of elements 27 and 28 = 1.47 ft.

$V.d = 70\ (1.47) = 102.55 > 64$

Hence, for monotube members, $C_d = 0.45$ [see Table 1.2.5C of the Specifications (1)]

For monotube members, $P = 0.00256\ (1.3 \times 70)^2\ (0.45)\ (1.0) = 9.54$ lbs/sq.ft.

The nodal wind load at node 16 due to wind on the monotube members (i.e., elements 27 and 28) is:

P_w = (P) (projected tributary area) = 84 lbs.

For the 4' x 5' sign panel at node 16, the aspect ratio $\frac{L}{W}$ is $\frac{5}{4} = 1.25$.

Hence, for wind on the sign panel, $C_d = 1.1375$ [see Table 1.2.5C of the Specifications (1)]. Therefore, for wind on the sign panel, $P = (.00256)\ (1.3 \times 70)^2\ (1.1375)\ (1) = 24.12$ lbs/ft^2.

The nodal wind load at node 16 due to wind on the sign panel = (P) (projected area of the sign panel) = 482.4 lbs.

The total nodal wind load at node 16 = nodal wind load due to wind on the monotube members + nodal wind load due to wind on the sign panel = 84 + 482.4 = 566.4 lbs.

The wind loads for all the nodes are given in Table 4.1.

B.4. Output Data: Forces and Moments

Checking of computer analysis output along with the design requirements indicate that the forces and moments at the midspan of the beam, at the connection between the column and the beam, and at the column base usually will govern. The forces and moments at these locations for dead load, dead load plus ice load, and dead load plus ice load plus wind load are given in Table B.2. It is emphasized that as shown in Table B.2, the in-plane and out-of-plane forces are independent of each other. That is, the in-plane forces due to D+I+W loading are identical to the in-plane forces under D+I only. As a result, the forces due to D+I and W loads could be calculated separately and then combined to obtain the total forces due to D+I+W loads.

B.5. Output Data: Deflections

From the computer output for deflections, the maximum deflections at the midspan of the beam and at the top of the column are given in Table B.3. This is the total out-of-plane deflection at the midspan of the beam. The net deflection at midspan relative to the column top is approximately equal to [Δ_w at center of beam - Δ_w at column top] = (12.09 - 1.928) in. = 10.162 in.

B.6. Computation of Stresses

Two significant points were chosen for analysis of the stresses in the structure. The first is node 16 (see Fig. 4.5), located at the midspan of the beam, where the largest beam stresses were expected to occur. The second point is either node 1 or node 31, located at the base of the column, where a combination of bending and axial stresses are likely to control the design of the column. The bending stresses at these locations are computed as follows:

B.6.1. Stresses at midspan of beam

Cross-sectional area, A = 10.49 in^2.

Moment of inertia, I = 416.18 in^4.

TABLE B.2. Static Forces and Moments by Computer Analysis

Location	Axial Force (lbs)	Shear (In-Plane) (lbs)	Shear (Out-of-Plane) (lbs)	Torsion (in-lb)	Moment (Out-of-Plane) (in-lb)	Moment (In-Plane) (in-lb)
			DEAD LOAD			
℄ Beam	-1809	-386.3	0.0	0.0	0.0	-356200
Column Base	-2528	-1808	0.0	0.0	0.0	-176900
Column-to-Beam Connection	-1809	2035	0.0	0.0	0.0	301400
			DEAD LOAD + ICE LOAD			
℄ Beam	-2628	-598.1	0.0	0.0	0.0	-519300
Column Base	-3660	-2628	0.0	0.0	0.0	-258900
Column-to-Beam Connection	-2628	2972	0.0	0.0	0.0	439700
			DEAD LOAD + ICE LOAD + WIND LOAD			
℄ Beam	-2628	-598.1	771.3	1102	607000	519300
Column Base	-3660	2628	2205	22690	535900	258900
Column-to-Beam Connection	-2628	2972	2025	1102	22690	439700

TABLE B.3. Static Deflections

Location	In-Plane Deflection Due to Dead Load, Δ_D (inches)	In-Plane Deflection Due to (Dead Load + Ice Load), Δ_{D+I} (inches)	Out-Of-Plane Deflection Due to Wind Load, Δ_W (inches)	Resultant Deflection Due to (Dead Load + Ice Load + Wind Load) $= \sqrt{\Delta_{D+I}^2 + \Delta_W^2}$ (inches)
Midspan of Beam	-4.556	-6.626	12.09*	13.8
Column Top	-0.003	-0.004	1.928	1.93

* This is the total out-of plane deflection at the midspan of the beam. The net deflection at midspan relative to the column top is approximately equal to [Δ_W at center of beam - Δ_W at column top] = (12.09 - 1.928) in. = 10.162 in.

Section modulus, $S = 46.24\ in^3$.

In-plane dead load moment, $M_D = 356{,}200$ in-lbs. [see Table B.2].

Bending stress due to dead load $= \frac{M_D}{S} = 7.7$ ksi

In-plane moment due to dead + ice load, $M_{D+I} = 519{,}300$ in.-lb. [see Table B.2].

Bending stress due to dead load + ice load $= \frac{M_{D+I}}{S} = 11.23$ ksi

Out-of-plane moment due to wind load, $M_w = 607{,}000$ in.-lb. [see Table B.2].

Bending stress due to wind load, $\frac{M_w}{S} = 13.13$ ksi

Resulting Moment due to dead load + ice load + wind load, M_R:

$$M_R = \sqrt{M_{D+I}^2 + M_w^2} = 798825 \text{ in.-lb.}$$

Bending stress due to dead load + ice load + wind load

$$\sigma = \frac{M_R}{S} = 17.28 \text{ ksi}$$

The stresses for all loading cases are shown in Table 8.4.

B.6.2. Stresses at column base

Cross-sectional area $= 8.7253\ in^2$

Moment of inertia, $I = 239.34\ in^4$

Section Modulus, $S = 31.912\ in^3$

Moments, $M_D = 176{,}900$ in.-lb. [see Table B.2].

Bending stress due to dead load = 5.54 ksi

$M_{D+I} = 258{,}900$ in.-lb. [see Table B.2].

Bending stress due to dead load + ice load = 8.1 ksi

$M_w = 535{,}900$ in.-lb. [see Table B.2].

Bending stress due to wind load = 16.8 ksi

Resultant Moment, $M_R = 595{,}162$ in.-lb.

Bending stress due to dead load + ice load + wind load $= \frac{M_R}{S} = 18.65$ ksi

The axial stresses at the column base are computed as P/A, where P is the total axial load. For the most severe case for the column axial load, which occurs for dead + ice load, the axial stress equals 0.44 ksi at the column base. In consequence, axial stresses are therefore not important.

TABLE B.4. Maximum Static Bending Stresses (ksi) by Computer Analysis

Load Case	Midspan of Beam	At Base of Column
D	7.7	5.54
D + I	11.23	8.1
W	13.13	16.8
D + I + W	17.28	18.65

B.7. Simplified Analysis of a Monotube Structure

B.7.1. Sample structure

The base structure of the original study (see Fig. 4.1) will be used to demonstrate the simplified analysis. This will facilitate a direct comparison of the results with those of the detailed numerical analysis.

B.7.2. Analysis of the structure for in-plane bending due to gravity loads

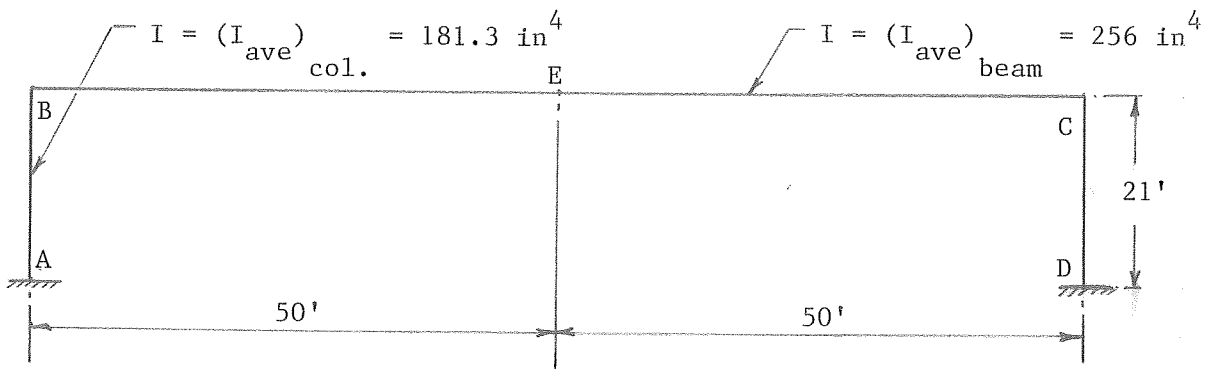

Fig. B.1. Simplified Model for In-Plane Bending

$(I_{ave})_{beam}$ = Average moment of inertia of the tapered beam member, computed as shown below.

$(I_{ave})_{col.}$ = Average moment of inertia of the tapered column member, computed as shown below.

$$(I_{ave})_{beam} = \frac{1}{2}\,[I_{at\ end} + I_{midspan}] = 256\ in^4.$$

$$(I_{ave})_{col.} = \frac{1}{2}\,[I \text{ at column bottom} + I \text{ at column top}] = 181.3\ in^4.$$

B.7.2.1 Dead loads

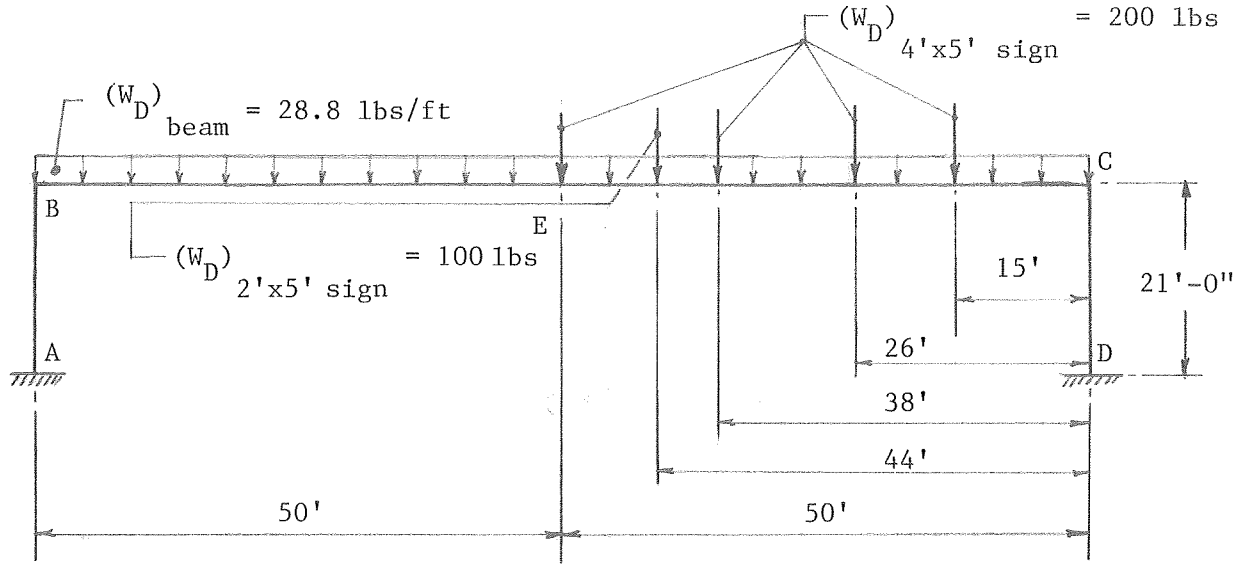

Fig. B.2. Dead Loads on the Simplified Model

Calculations of (W_D) beam and (W_D) signs:

Average cross-sectional area of the tapered beam = 8.46 in.^{2}.

i.e., (W_D) beam = 28.8 lbs/ft.

Weight of 4' x 5' sign = 4 x 5 x 10 = 200 lbs.

Weight of 2' x 5' sign = 100 lbs.

B.7.2.2 Ice loads

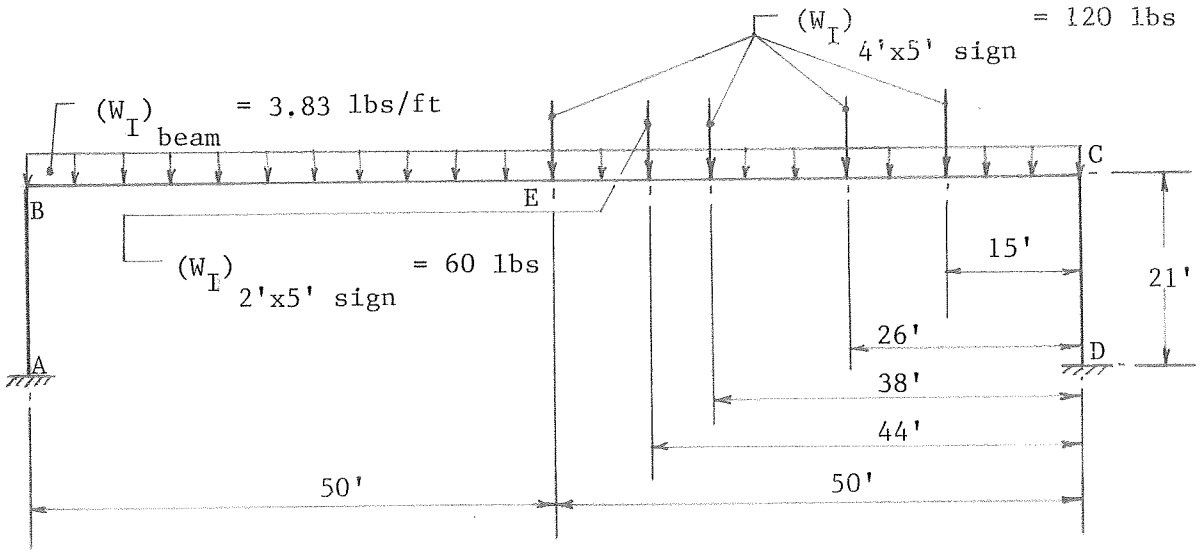

Fig. B.3. Ice Loads on the Simplified Model

Calculations of Beam Ice Load:

Average outer diameter of the tapered beam = $\frac{1}{2}$ (11.11 + 18) in. = 14.6 in.

i.e., (W_I) beam = 3.83 lbs/ft.

Ice load on 4'x 5' sign = 4 x 5 x 2 x 3 = 120 lbs.

Ice load on 2' x 5' sign = 60 lbs.

B.7.2.3 Determination of forces and moments

Moment and force coefficients have been taken from "Steel Designers' Manual", 4th Ed. , prepared for the Constructional Steel Research and Development Organization of England and published by The English Language Book Society and Crosby Lockwood Staples, London. However, other structural design handbooks that give similar data are acceptable.

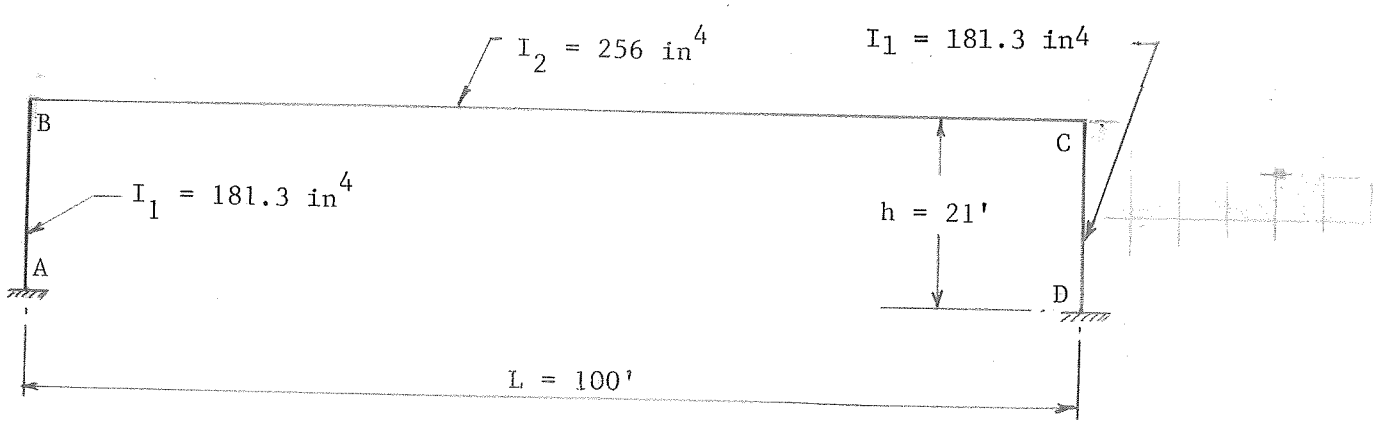

Forces and moments for dead loads:

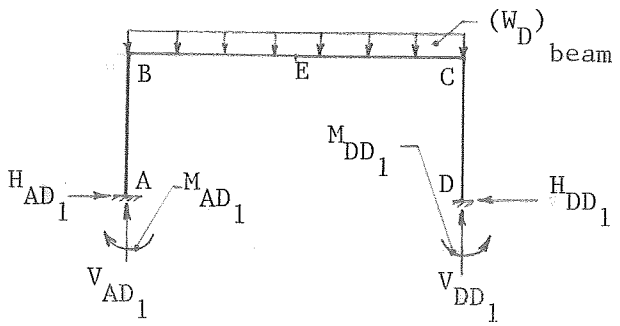

Case 1

$M_{AD_1} = M_{DD_1}$ = 10448.4 lbs.-ft.

$M_{BD_1} = M_{CD_1}$ = -20897 lbs.-ft.

M_{ED_1} = 15103 lbs.-ft.

$V_{AD_1} = V_{DD_1}$ = 1440 lbs; H_{AD_1} = H_{DD_1} = 1493 lbs.

(W_D) 4'x 5' sign = 200 lbs.

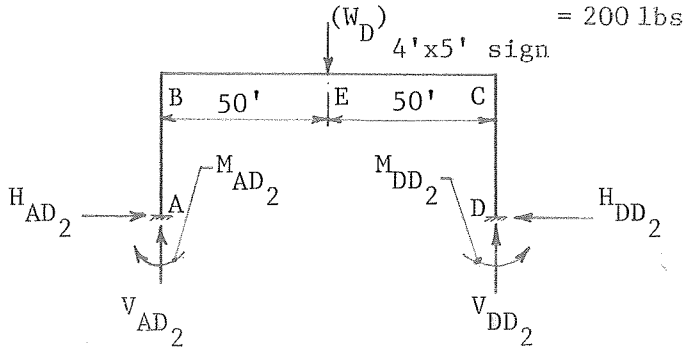

Case 2

$M_{AD_2} = M_{DD_2} = 1088.4$ lbs.-ft.

$M_{BD_2} = M_{CD_2} = -2177$ lbs.-ft.

$M_{ED_2} = 2823$ lbs.-ft.

$H_{AD_2} = H_{DD_2} = 156$ lbs.

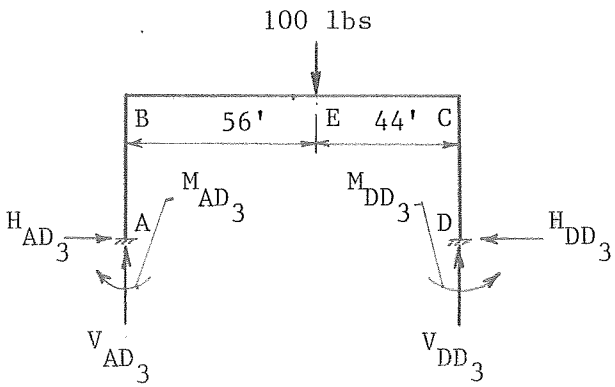

Case 3

$M_{AD_3} = 589.5$ lbs.-ft.

$M_{BD_3} = -1027.5$ lbs.-ft.

$M_{ED_3} = 1122.5$ lbs.-ft.

$M_{DD_3} = 483.2$ lbs.-ft.

$M_{CD_3} = -1134$ lbs.-ft.

$V_{AD_3} = 43$ lbs.

$V_{DD_3} = 57$ lbs.

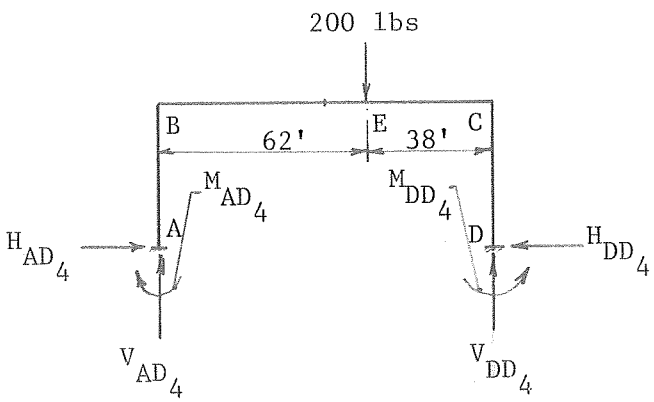

Case 4

$M_{AD_4} = 1229$ lbs.-ft.

$V_{AD_4} = 72$ lbs.

$H_{AD_4} = H_{DD_4} = 146.5$ lbs.

$M_{BD_4} = -1847.5$ lbs.-ft.

$M_{ED_4} = 1752.5$ lbs.-ft.

$V_{DD_4} = 128$ lbs.

$M_{CD_4} = -2254$ lbs.-ft.

$M_{DD_4} = 822.44$ lbs. ft.

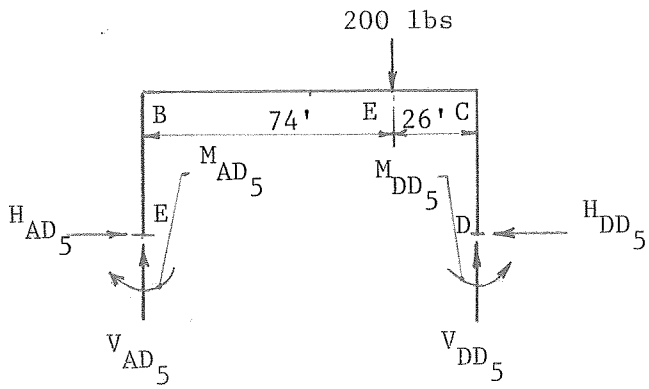

Case 5

M_{AD_5} = 1169.6 lbs.-ft.

V_{AD_5} = 45.4 lbs.

$H_{AD_5} = H_{DD_5}$ = 119.7 lbs.

M_{BD_5} = -1344.1 lbs.-ft.

M_{ED_5} = 926 lbs.-ft.

M_{DD_5} = 505.7 lbs.-ft.

M_{CD_5} = -2008 lbs.-ft.

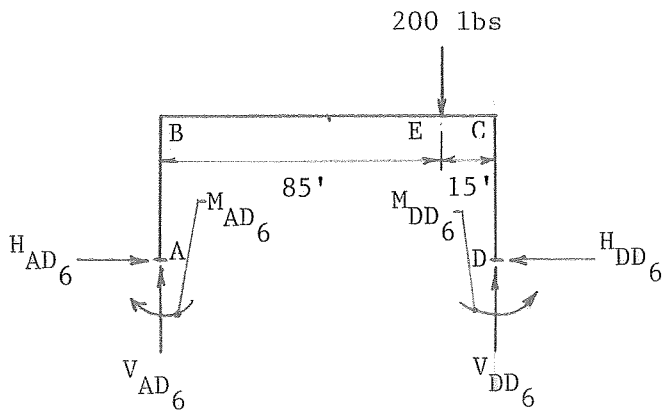

Case 6

M_{AD_6} = 876 lbs.-ft.

V_{AD_6} = 23.6 lbs.

V_{DD_6} = 176.4 lbs.

$H_{AD_6} = H_{DD_6}$ = 79.3 lbs.

M_{BD_6} = -789.3 lbs.-ft.

M_{ED_6} = 390.7 lbs.-ft.

M_{DD_6} = 234.3 lbs.-ft.

M_{CD_6} = -1431 lbs.-ft.

$$M_{AD} = M_{AD_1} + M_{AD_2} + M_{AD_3} + M_{AD_4} + M_{AD_5} + M_{AD_6} = 10448.4 + 1088.4 + 589.5 + 1229 + 1169.6 + 876 = 15400.9 \text{ lbs.-ft.} = 184811 \text{ in.-lb.}$$

$$M_{BD} = M_{BD_1} + M_{BD_2} + M_{BD_3} + M_{BD_4} + M_{BD_5} + M_{BD_6} = -20897 - 2177 - 1027.5 - 1847.5 - 1344.1 - 789.3 = -28082.4 \text{ lbs.-ft.} = -336989 \text{ in.-lb.}$$

$M_{CD} = M_{CD_1} + M_{CD_2} + M_{CD_3} + M_{CD_4} + M_{CD_5} + M_{CD_6} = -20897 - 2177 - 1134$

$- 2254 - 2008 - 1431 = - 29901$ lbs.-ft. $= 358812$ in.-lb.

$M_{DD} = M_{DD_1} + M_{DD_2} + M_{DD_3} + M_{DD_4} + M_{DD_5} + M_{DD_6} = 10448.4 + 1088.4 +$

$822.44 + 505.7 + 234.3 = 13582.44$ lbs.-ft. $= 162989$ in.-lb.

$M_{ED} = M_{ED_1} + M_{ED_2} + M_{ED_3} + M_{ED_4} + M_{ED_5} + M_{ED_6} = 15103 + 2823 + 1122.5$

$+ 1752.5 + 926 + 390.7 = 22117.7$ lbs.-ft. $= 265413$ in.-lb.

$H_{AD} = H_{AD_1} + H_{AD_2} + H_{AD_3} + H_{AD_4} + H_{AD_5} + H_{AD_6} = 1493 + 156 + 77 + 146.5$

$119.7 + 79.3 = 2072$ lbs.

$H_{DD} = 2072$ lbs.

$V_{AD} = V_{AD_1} + V_{AD_2} + V_{AD_3} + V_{AD_4} + V_{AD_5} + V_{AD_6} = 1440 + 100 + 43$

$+ 72 + 45.4 + 23.6 = 1724$ lbs.

$V_{DD} = V_{DD_1} + V_{DD_2} + V_{DD_3} + V_{DD_4} + V_{DD_5} + V_{DD_6} = 1440 + 100 + 57$

$+ 128 + 154.6 + 176.4 = 2056$ lbs.

Forces and moments for ice loads

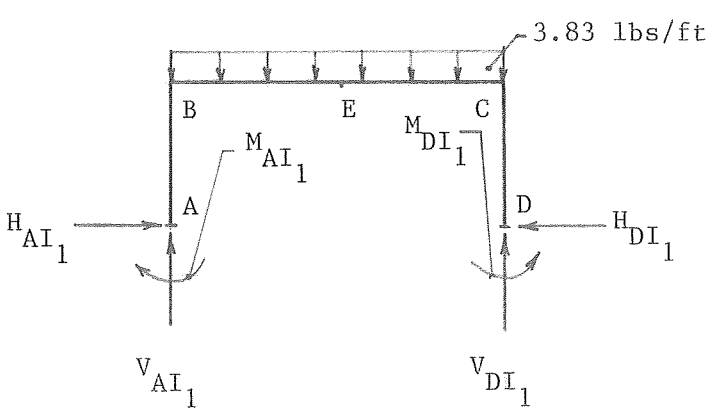

$M_{AI_1} = M_{DI_1} = 1389.5$ lbs.-ft.

$M_{BI_1} = M_{CI_1} = -2779$ lbs.-ft.

$M_{EI_1} = 2008.5$ lbs.-ft.

$V_{AI_1} = V_{DI_1} = 191.5$ lbs.

$H_{AI_1} = H_{DI_1} = 198.5$ lbs.

Case 1

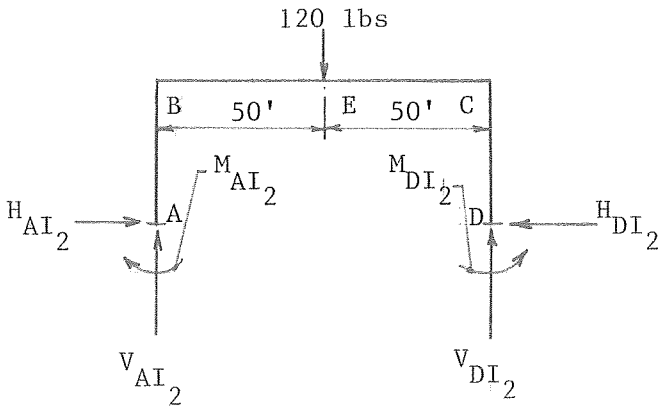

Case 2

$M_{AI_2} = M_{DI_2} = 653$ lbs.-ft.

$M_{BI_2} = M_{CI_2} = -1306$ lbs.-ft.

$M_{EI_2} = 1694$ lbs.-ft.

$H_{AI_2} = H_{DI_2} = 93.3$ lbs.

$V_{AI_2} = V_{DI_2} = 60$ lbs.

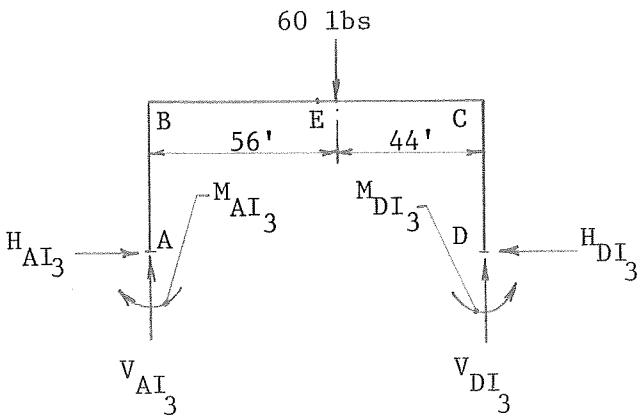

Case 3

$M_{AI_3} = 354$ lbs.-ft.

$V_{AI_3} = 26$ lbs.

$V_{DI_3} = 34$ lbs.

$H_{AI_3} = H_{DI_3} = 46.2$ lbs.

$M_{BI_3} = -616$ lbs.-ft.

$M_{EI_3} = 684$ lbs.-ft.

$M_{DI_3} = 290$ lbs.-ft.

$M_{CI_3} = -680.2$ lbs.-ft.

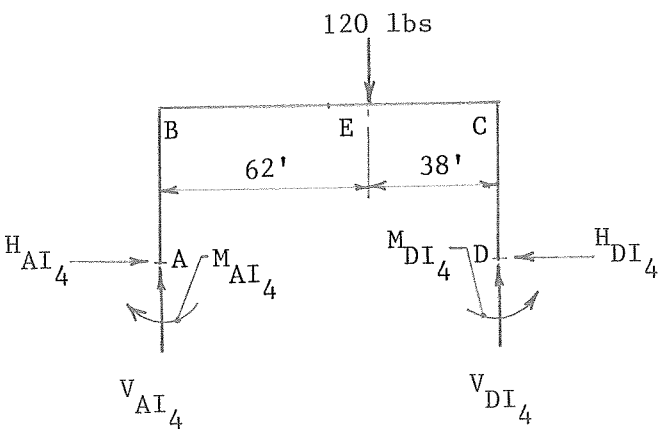

Case 4

$M_{AI_4} = 737.4$ lbs.-ft.

$V_{AI_4} = 43.2$ lbs.

$V_{DI_4} = 77$ lbs.

$H_{AI_4} = H_{DI_4} = 88$ lbs.

$M_{BI_4} = -1111$ lbs.-ft.

$M_{EI_4} = 1050$ lbs.-ft.

$M_{DI_4} = 494$ lbs.-ft.

$M_{CI_4} = -1354$ lbs.-ft.

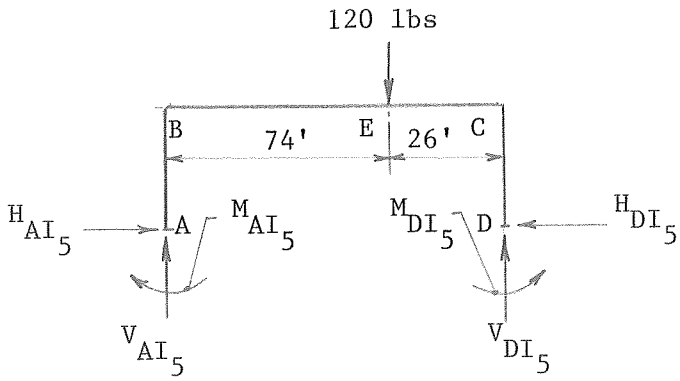

Case 5

M_{AI_5} = 702 lbs.-ft.

V_{AI_5} = 27.3 lbs.

V_{DI_5} = 92.7 lbs.

$H_{AI_5} = H_{DI_5}$ = 72 lbs.

M_{BI_5} =-810 lbs.-ft.

M_{EI_5} = 555 lbs.-ft.

M_{DI_5} = 303.4 lbs.-ft.

M_{CI_5} =-1209 lbs.-ft.

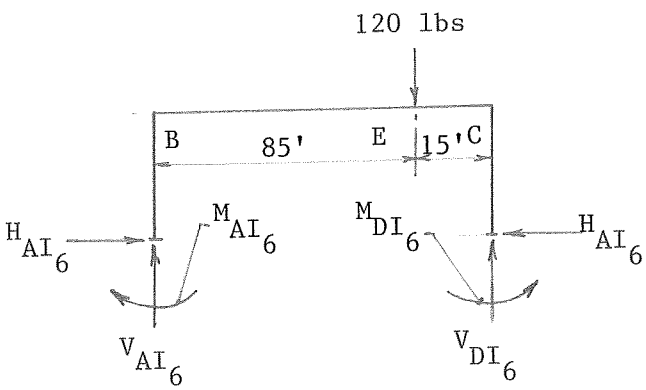

Case 6

M_{AI_6} = 526 lbs.-ft.

V_{AI_6} = 14 lbs.

V_{DI_6} = 106 lbs.

$H_{AI_6} = H_{DI_6}$ = 47.6 lbs.

M_{BI_6} =-474 lbs.-ft.

M_{EI_6} = 226.4 lbs.-ft.

M_{DI_6} = 140.6 lbs.-ft.

M_{CI_6} =-856 lbs.-ft.

$$M_{AI} = M_{AI_1} + M_{AI_2} + M_{AI_3} + M_{AI_4} + M_{AI_5} + M_{AI_6} = 1389.5 + 653 + 354 +$$

$$737.4 + 702 + 526 = 4362 \text{ lbs.ft.}$$
$$= 52344 \text{ in.-lb.}$$

$$M_{BI} = M_{BI_1} + M_{BI_2} + M_{BI_3} + M_{BI_4} + M_{BI_5} + M_{BI_6} = -2779 -1306 -616 -1111$$
$$-810 -474 = -7096 \text{ lbs.-ft.}$$
$$= -85152 \text{ in.-lb.}$$

$$M_{CI} = M_{CI_1} + M_{CI_2} + M_{CI_3} + M_{CI_4} + M_{CI_5} + M_{CI_6} = -2779 -1306 -680.2 -1354$$
$$-1209 -856 = -8184.2 \text{ lbs.-ft.}$$
$$= -98210 \text{ in.-lb.}$$

$$M_{DI} = M_{DI_1} + M_{DI_2} + M_{DI_3} + M_{DI_4} + M_{DI_5} + M_{DI_6} = 1389.5 + 653 + 290 + 494$$
$$+ 303.4 + 140.6 = 39246 \text{ in.-lb.}$$

$$M_{EI} = M_{EI_1} + M_{EI_2} + M_{EI_3} + M_{EI_4} + M_{EI_5} + M_{EI_6} = 2008.5 + 1694 + 684 + 1050$$
$$+ 555 + 226.4 = 6218 \text{ lbs.} = 74616 \text{ in.-lb.}$$

$$H_{AI} = H_{AI_1} + H_{AI_2} + H_{AI_3} + H_{AI_4} + H_{AI_5} + H_{AI_6} = 198.5 + 93.3 + 46.2 + 88$$
$$+ 72 + 47.6 = 545.6 \text{ lbs.}$$

$$H_{DI} = 545.6 \text{ lbs.}$$

$$V_{AI} = V_{AI_1} + V_{AI_2} + V_{AI_3} + V_{AI_4} + V_{AI_5} + V_{AI_6} = 191.5 + 60 + 26 + 43.2$$
$$+ 27.3 + 14 = 362 \text{ lbs.}$$

$$V_{DI} = V_{DI_1} + V_{DI_2} + V_{DI_3} + V_{DI_4} + V_{DI_5} + V_{DI_6} = 191.5 + 60 + 34 + 77 + 92.7$$
$$+ 106 = 561 \text{ lbs.}$$

B.7.2.4 In-Plane deflection due to gravity loads

The maximum vertical in-plane deflection due to dead loads and ice loads is considered occurring at the midspan of the beam member. To get an estimate of the maximum beam deflection in a simple way, the beam has been considered simply supported in-plane between the two columns. The computations of the maximum deflections due to dead loads and ice loads based upon this simplified approach are presented as follows. The same reference that has been used for determination of forces and moments is also applicable here.

Maximum deflection due to dead loads

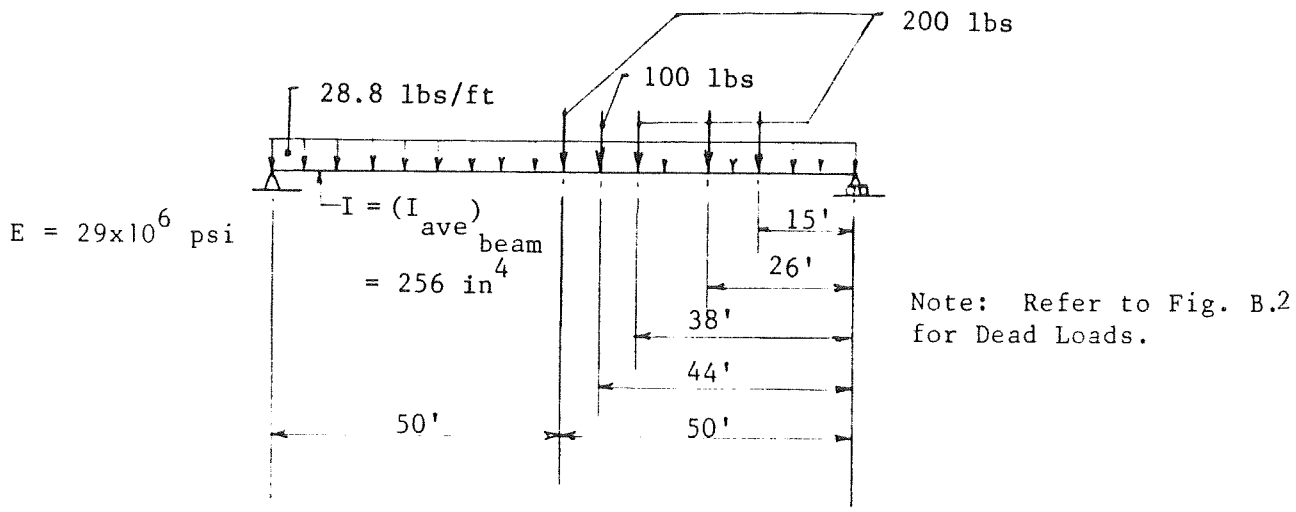

Fig. B.4 - Dead Loads on the Simplified Model for Deflection.

Case 1

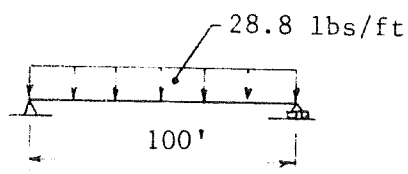

$(\Delta\text{mid-span})_{D1} = 8.73$ in.

Case 2

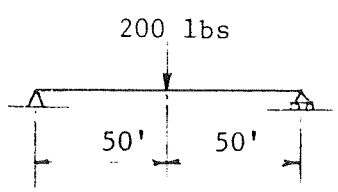

$(\Delta\text{mid-span})_{D2} = 0.97$ in.

Case 3

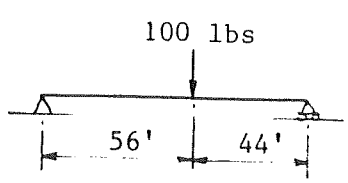

$(\Delta\text{mid-span})_{D3} = 0.47$ in.

Case 4

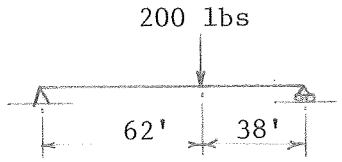

$(\Delta\text{mid-span})_{D4} = 0.89$ in.

Case 5

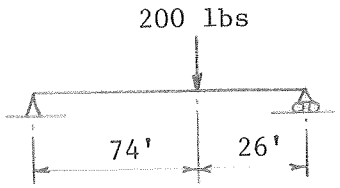

$(\Delta\text{mid-span})_{D5} = 0.69$ in.

Case 6

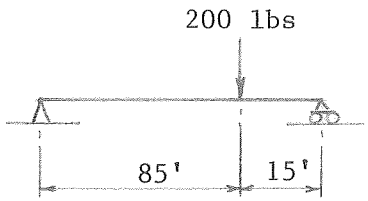

$(\Delta\text{mid-span})_{D6} = 0.42$ in.

$$(\Delta\text{mid-span})_D = (\Delta\text{mid-span})_{D1} + (\Delta\text{mid-span})_{D2} + (\Delta\text{mid-span})_{D3} + (\Delta\text{mid-span})_{D4} + (\Delta\text{mid-span})_{D5} + (\Delta\text{mid-span})_{D6}$$

$$= 8.73 + 0.97 + 0.47 + 0.89 + 0.69 + 0.42 = 12.17 \text{ in.}$$

Maximum deflection due to ice loads

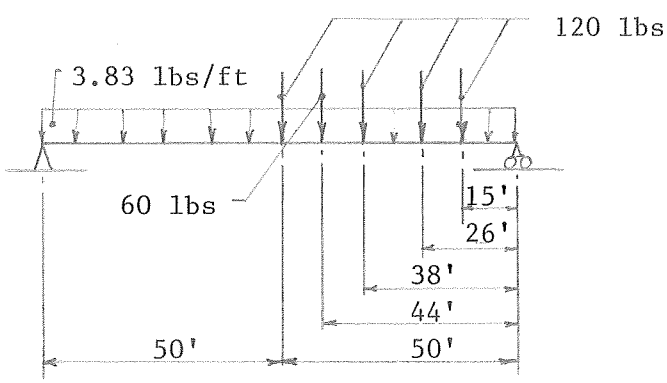

Note: Refer to Fig. B.3 for Ice Loads.

Fig. B.5 - Ice Loads on the Simplified Model for Deflection.

Case 1

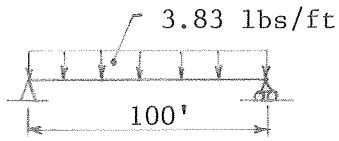

$(\Delta\text{mid-span})_{I1} = 1.2$ in.

Case 2

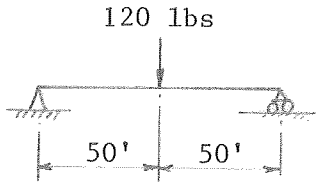

$(\Delta\text{mid-span})_{I2} = 0.58$ in.

Case 3

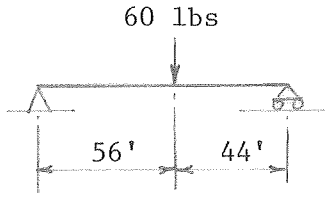

$(\Delta\text{mid-span})_{I3} = 0.28$ in.

Case 4

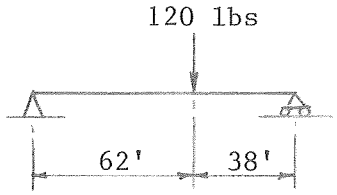

$(\Delta\text{mid-span})_{I4} = 0.54$ in.

Case 5

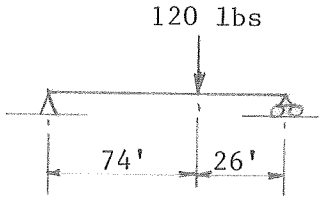

$(\Delta\text{mid-span})_{I5} = 0.42$ in.

Case 6

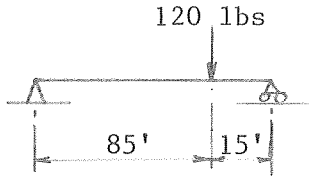

$(\Delta\text{mid-span})_{I6} = 0.25$ in.

$$(\Delta\text{mid-span})_{I} = (\Delta\text{mid-span})_{I1} + (\Delta\text{mid-span})_{I2} + (\Delta\text{mid-span})_{I3} + (\Delta\text{mid-span})_{I4} + (\Delta\text{mid-span})_{I5} + (\Delta\text{mid-span})_{I6}$$

$$= 1.2 + 0.58 + 0.28 + 0.54 + 0.42 + 0.25 = 3.27 \text{ in.}$$

B.7.3 Analysis of the structure for out-of-plane bending due to wind loads

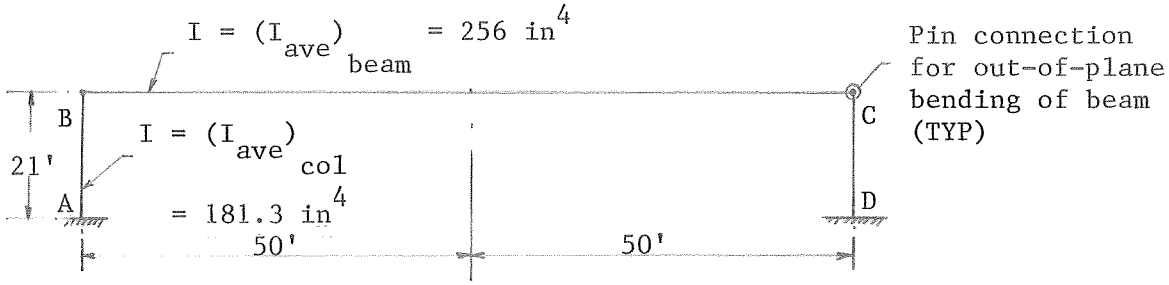

Fig. B.6 - Simplified Model for Out-of-Plane Bending.

B.7.3.1 Wind loads

Wind Loads on Columns

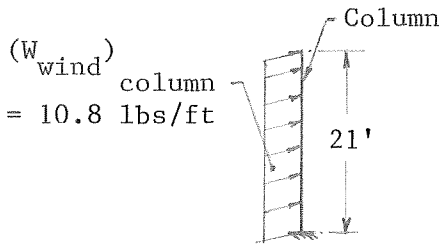

Avg. diameter of column = 13.53 in.

(W_{wind}) column = 10.8 lbs/ft.

$$P = 0.00256\ (1.3V)^2\ C_d\ C_h$$

[Refer to Sec. 1.2.5 of the Specifications (1)]

where:

P = Wind pressure in lbs/ft^2

V = Wind speed = 70 mph

C_h = 1.0 (assumed)

$V.d$ = 79

So,

C_d = 0.45

P = 9.54 lbs/ft^2

(W_{wind}) column = 10.8 lbs/ft

Wind Load on Beam:

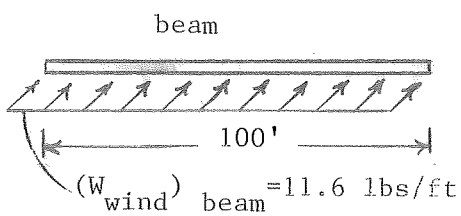

Avg. diameter of beam - 1/2 (11.11 + 18) in. = 14.56 in.

Again, wind pressure, $P = .00256\ (1.3V)^2\ C_d\ C_h$

where:

C_h = 1.0

C_d = 0.45

$V.d$ = 84.93

P_2 = 9.54 lbs/ft^2

V = 70 mph

(W_{wind}) beam = 11.6 lbs/ft

Wind load on signs:

5' x 4' signs:

$L/W = 5/4 = 1.25$ Refer to Table 1.2.5C of the Specifications (1).

$C_d = 1.1375$

$P = 24.12 \text{ lbs./ft}^2$

Wind load on 5' x 4' sign = 482.4 lbs.

5' x 2' signs:

$L/W = 5/2 = 2.5$

$C_d = 1.1375$

$P = 25.3 \text{ lbs./ft}^2$

Wind load on 5' x 2' sign = 253 lbs.

B.7.3.2 Determination of forces and moments

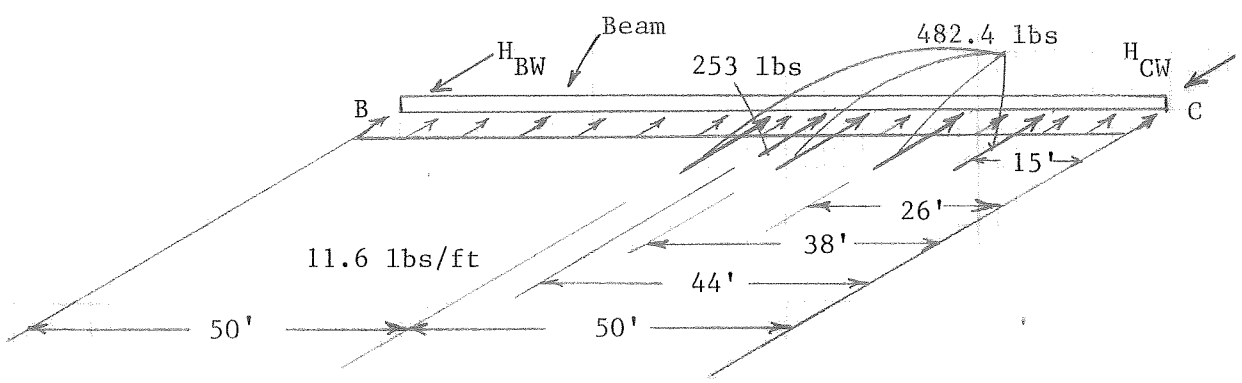

The beam is considered simply-supported at the column tops and the corresponding forces and moments are determined as follows:

H_{BW} = 1313.62 lbs.

HC_W = 2029 lbs.

M_{EW} = 614172 in.-lb.

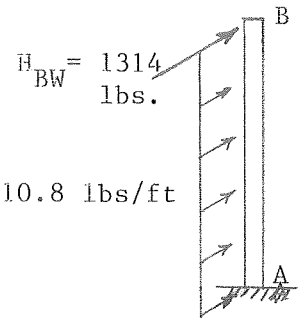

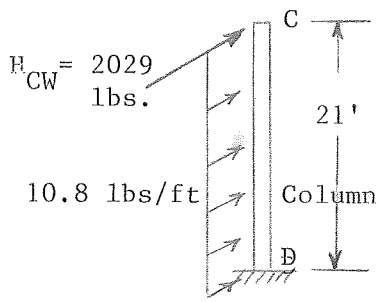

H_{AW} = 1541 lbs.

M_{AW} = 359712 in.-lb.

H_{DW} = 2256 lbs.

M_{DW} = 539885 in.-lb.

B.7.3.3 Calculations of deflections

The out-of-plane deflections of the beam shall be proportional to the in-plane deflections as obtained before and shall be based upon the ratio of the respective loads. Hence, the out-of-plane deflection due to the bending of the beam only, are obtained as follows:

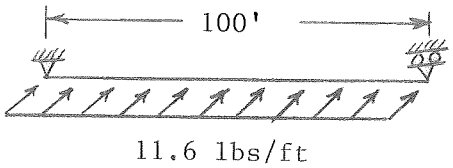

$(\Delta_{mid\text{-}span})_{WB_1}$ = 3.52 in.

Case 1

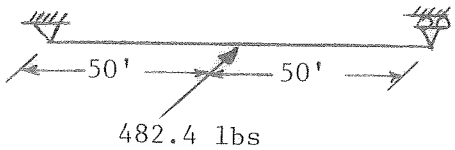

$(\Delta_{mid\text{-}span})_{WB_2}$ = 2.34 in.

Case 2

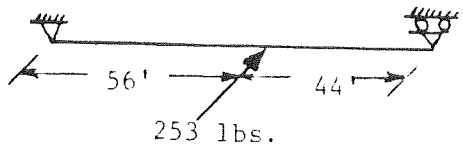

Case 3

$(\Delta_{mid\text{-}span})_{WB_3} = 1.19$ in.

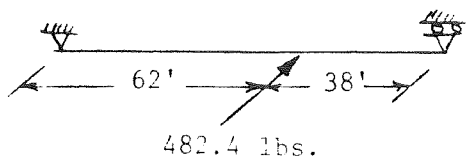

Case 4

$(\Delta_{mid\text{-}span})_{WB_4} = 2.15$ in.

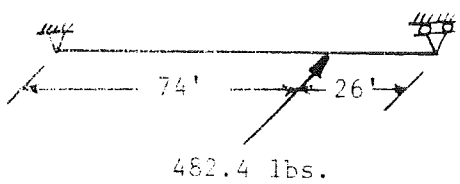

Case 5

$(\Delta_{mid\text{-}span})_{WB_5} = 1.67$ in.

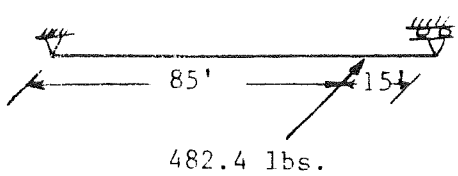

Case 6

$(\Delta_{mid\text{-}span})_{WB_6} = 1.10$ in.

$(\Delta_{mid\text{-}span})_{WB}$ = Horizontal deflection at mid-span for wind load due to beam-bending, only

$$= (\Delta_{mid\text{-}span})_{WB_1} + (\Delta_{mid\text{-}span})_{WB_2} + (\Delta_{mid\text{-}span})_{WB_3} + (\Delta_{mid\text{-}span})_{WB_4} + (\Delta_{mid\text{-}span})_{WB_5} + (\Delta_{mid\text{-}span})_{WB_6}$$

$$= 3.52 + 2.34 + 1.19 + 2.15 + 1.67 + 1.01$$

$$= 11.88 \text{ in.}$$

Deflections of column tops

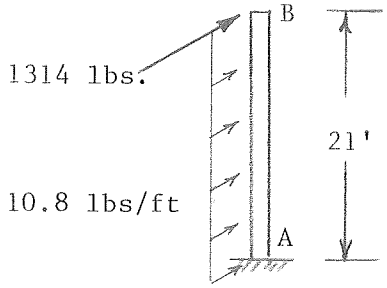

Δ_{BW} = Horizontal deflection of the left column top, due to wind load.

= 1.42 in.

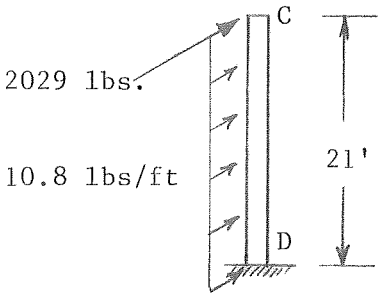

Δ_{CW} = Horizontal deflection of the right column top, due to wind load.

= 2.15 in.

Resultant deflection at mid-span of beam

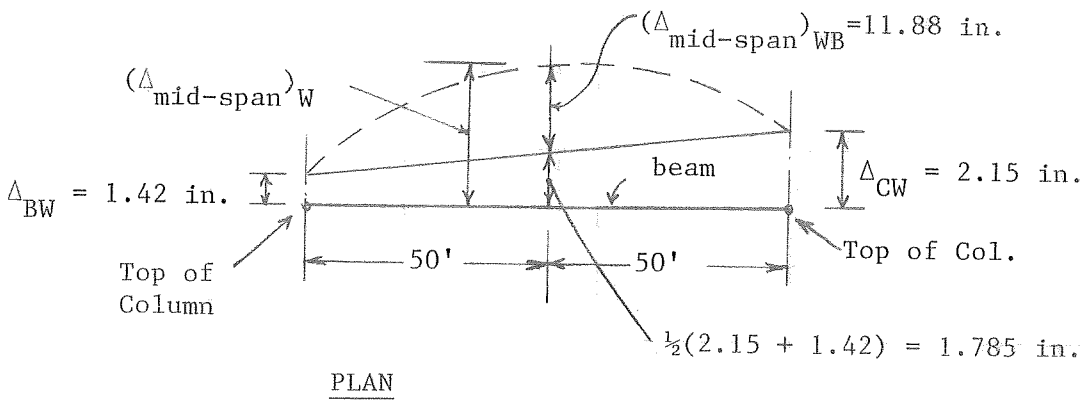

PLAN

$(\Delta_{mid-span})_W$ = (1.785 + 11.88) in. = 13.7 in.

B.7.4 Resultant Forces and Moments

The resultant forces and moments at the mid-span of the beam, at the beam-to-column connection, and at the column base, are obtained by combining the resultants that have been obtained in the preceding analyses for in-plane and out-of-plane cases. The forces and moments at these locations for dead load, dead load plus ice load, and dead load plus ice load plus wind load are given in Table B.5.

B.7.5 Calculations of Stresses

Using maximum static forces and moments as given in Table B.5, the maximum static bending stresses at the mid-span of the beam and at the column base are calculated as follows:

Stresses at mid-span of beam:

Cross-sectional area = 10.49 in^2

Moment of inertia = 416.18 in^4

Section modulus = 46.24 in^3

In-plane moment due to dead load $= \frac{265413}{46.24} = 7.4$ ksi

Bending stress due to dead load + ice load $= \frac{340029}{46.24} = 7.4$ ksi

Bending stress due to wind load $= \frac{614172}{46.24} = 13.3$ ksi

Resultant moment due to dead load + ice load + wind load

$$= \sqrt{(340029)^2 + (614172)^2}$$

$$= 702016 \text{ in.-lb.}$$

Bending stress due to dead load + ice load + wind load

$$= \frac{702016}{46.24}$$

$$= 15.2 \text{ ksi}$$

TABLE B.5. Static Forces and Moments by Simplified Analysis

Location	Axial Force (lbs)	Shear (In-Plane) (lbs)	Shear (Out-of-Plane) (lbs)	Torsion (in-lb)	Moment (Out-of-Plane) (in-lb)	Moment (In-Plane) (in-lb)
			DEAD LOAD			
℄ Beam	2072*	284	0	0	0	265413
Column Base	2056*	2072	0	0	0	184811
Column-to-Beam Connection	2072*	2056	0	0	0	358812
			DEAD LOAD + ICE LOAD			
℄ Beam	2618*	455	0	0	0	340029
Column Base	2617*	2618	0	0	0	237155
Column-to-Beam Connection	2618*	2617	0	0	0	457022
			DEAD LOAD + ICE LOAD + WIND LOAD			
℄ Beam	2618*	455	734	0	614172	340029
Column Base	2617*	2618	2256	0	539885	237155
Column-to-Beam Connection	2618*	2617	2029	0	0	457022

* Compression

Stresses at column base:

Cross-sectional area = 8.7253 in^2

Moment of inertia = 239.34 in^4

Section modulus = 31.912 in^3

Bending stress due to dead load $= \frac{184811}{31.912} = 5.8$ ksi

Bending stress due to dead load + ice load $= \frac{237155}{31.912} = 7.43$ ksi

Bending stress due to wind load $\frac{539885}{31.912} = 16.92$ ksi

Resultant moment due to dead load + ice load + wind load

$$= \sqrt{(237155)^2 + (539885)^2}$$

$$= 589677 \text{ in.-lb.}$$

Bending stress due to dead load + ice load + wind load

$$= \frac{589677}{31.912} = 18.5 \text{ ksi}$$

B.7.6 Comparison between Computer Analysis using Finite Element Method and Simplified Analysis

The following compares the results of the computer analysis and the simplified analysis. It is done to explain how the results of the analyses correlate from the view points of modeling, loads and method of analysis.

From the Tables B.4 and B.6 for maximum static bending stresses, it is observed that at the midspan of the beam, the stresses for all load cases except for the wind load, are lower by the simplified analysis. In the simplified analysis, for in-plane bending due to gravity loads, the frame has been considered fully rigid at the beam-to-column connection. This induced additional restraint to reduce the midspan moments of the beam. This is unlike the computer analysis, where the beam-to-column connection has been modeled by using a short rectangular element to provide some moment resistance for in-plane bending and very small moment resistance for out-of-plane bending. In

TABLE B.6. Maximum Static Bending Stresses (ksi) by Simplified Analysis

Load Case	Midspan of Beam	At Base of Column
D	5.74	5.8
D + I	7.4	7.43
W	13.3	16.92
D + I + W	15.2	18.5

the simplified analysis for out-of-plane bending due to wind load, the beam-to-column connection has been idealized as a pin, and it is found that the bending stress at beam mid-span due to wind load by both the methods are nearly the same.

The maximum bending stresses at the column base (see Tables B.4 and B.6) by the two methods are about the same. This means that the modeling and the type of analysis as adopted in the simplified analysis can be considered quite adequate in obtaining the bending stresses at the base of the column.

No stresses have been calculated for the beam-to-column connection, as these will depend on the actual connection details. However, the forces and moments that have been obtained are compared as follows.

The magnitudes of the axial and shear forces as obtained from the two methods are about the same. The magnitude of the in-plane moment by the simplified analysis is slightly higher than that of the computer analysis. In the simplified analysis, the beam has been considered simply supported for out-of-plane bending, and consequently no out-of-plane moment is developed at the connection. In the computer analysis, on the other hand, consideration of the short rectangular element has induced some out-of-plane moment.

In the simplified analysis, the maximum in-plane deflection of the beam due to gravity loads is calculated on the basis of a simply supported beam between the column tops. This gives an estimate of the maximum possible deflection in the beam member, while neglecting any restraint at the beam ends. The out-of-plane deflections are nearly the same in the two methods. Details of the simplified analysis deflections are given in Table B.7.

TABLE B.7. Static Deflections by Simplified Analysis

Location	In-Plane Deflection Due to Dead Load, Δ_D (inches)	In-Plane Deflection Due to (Dead Load + Ice Load), Δ_{D+I} (inches)	Out-of-Plane Deflection Due to Wind Load, Δ_W (inches)	Resultant Deflection Due to (Dead Load + Ice Load + Wind Load) $= \sqrt{\Delta_{D+I}^2 + \Delta_W^2}$ (inches)
Center of Beam	12.17	15.44	13.7*	20.64
Column Top	0	0	2.15	2.15

* Total out-of-plane deflection at midspan of beam. The net deflection at midspan of beam relative to column tops is equal to [Δ_W at center of beam - Δ_W average of the deflections of column tops] = [13.7 - (2.15 + 1.42)/2] in. = 11.88 in.

APPENDIX C

Evaluation of $d^2/400$ Requirement for Sign Support Structures

C.1 Origins of $d^2/400$ Requirement

A survey of the available literature indicates that the origin of the $d^2/400$-requirement is documented insufficiently. In the Commentary to the AASHTO Code (1) it is stated that models of frame-type overhead sign support structures were tested in the wind tunnel, and a tentative criterion was established for overcoming the resonant oscillation. However, it is not clear whether these tests contributed at all towards the developmet of the $d^2/400$ criterion.

The Commentary also points out that for most common structures, "the frequency of the structure is very nearly one over the square root of the dead load deflection, in feet." It is not documented to what extent, if at all, the above assumption contributed to the development of $d^2/400$. A review of the available literature indicates that this assumption is not generally correct for all categories of structures. In the case of the truss-type structures investigated at North Carolina State University (16), for the 150-foot span the dead load deflection was 3.175 in. The term $1/\sqrt{3.175/12}$ equals 1.94 cps, which compares favorably with the first mode frequency of the structure, which is 2.094 cps. However, for the 82-foot span in the same study, the first mode frequency derived from the dead load deflection of 0.965 in. (i.e., $1/\sqrt{0.965/12} = 3.53$ cps), is approximately 85-percent higher than the calculated first mode frequency of 1.913 cps.

Similarly, it was observed that this approximation always leads to incorrect results when applied to the monotube structures. In Table C.1 the actual first mode frequencies for all models are compared with those calculated using the $1/\sqrt{\Delta_{DL}}$-approach. It is shown that the application of the $1/\sqrt{\Delta_{DL}}$-rule will overestimate the exact first mode frequency by a factor of 1.84 to 2.65 for the models considered.

TABLE C.1. Comparison of the Calculated Frequencies with AASHTO's Suggested Values

Model	Δ_{DL} (in)	$f = \frac{1}{\sqrt{\Delta_{DL}/12}}$ (cps)	f_1 (2D) (cps)	f/f_1(2D)
BASE	4.556	1.623	0.783	2.07
COL I	4.258	1.679	0.810	2.07
COL II	4.380	1.655	0.799	2.07
BEAM I	4.655	1.606	0.874	1.84
BEAM II	4.585	1.618	0.834	1.94
SPAN I	0.857	3.742	1.603	2.33
SPAN II	7.936	1.230	0.660	1.86
SIGN I	7.685	1.250	0.471	2.65
SIGN II	6.223	1.389	0.527	2.63

Yet another account of the origin of the $d^2/400$ is given by Pelkey (17). According to Pelkey, $d^2/400$ is obtained by equating the frequency of vortex shedding from a sign panel (not the structure itself), $f_v = SV/d$, to the fundamental frequency of a simple span beam of uniformly distributed mass and stiffness, $f_o = (\pi/2) \; EIg/w\ell^4$. In the above expressions,

f_v = vortex shedding frequency (cps)

S = Strouhal Number (= 0.2 for most typical cases)

V = wind velocity (ft/sec)

d = depth of the sign (ft)

E = Modulus of Elasticity (psi)

I = Moment of Inertia (in^4)

w = weight of the vibrating system (lb/in)

ℓ = span length (in)

g = gravity acceleration - 386.4 in/sec^2

Using $\Delta_{max} = 5w\ell^4/384EI$ for a simply supported and uniformly loaded beam and a wind velocity of 80 mph (117.33 ft/sec), equating the two frequencies one obtains,

$$f_v = f_o$$

$$\frac{SV}{d} = \frac{\pi}{2} \; \frac{EIg}{w\ell^4} \tag{1}$$

Substituting $EI/w\ell^4 = 5/384 \; \Delta_{max}$, Eq. (1) becomes

$$\frac{SV}{d} = \frac{\pi}{2} \; \frac{5g}{384 \; \Delta_{max}}$$

$$\frac{(0.2)(117.33)}{d} = \frac{\pi}{2} \; \frac{5(386.4)}{384 \; \Delta_{max}} \tag{2}$$

or

$$\Delta_{max} = \frac{d^2}{44.36} \text{ (in)} = \frac{d^2}{532} \text{ (ft)} \tag{3}$$

Although there is no solid evidence to this effect, it is believed that the $d^2/400$ was derived from calculations similar to those in the above example.

C.2 Discussion of the Requirement

If the $d^2/400$ requirement has been developed using the simple assumption that the first mode frequency of the structure is equal to $1/\sqrt{\Delta_{DL}}$, it has been shown that this is of limited value under the best of circumstances. In particular, the application of this rule to monotubes and bent-type structures such as that used by Pelkey (17) will result in large errors.

On the other hand, if the $d^2/400$ has been developed as stated by Pelkey (17), a question arises with respect to the assumed wind velocity of 80 mph at which resonance occurs. According to the U. S. Steel report (10), the probability of having laminar flow conditions at 80 mph is slight. Instead, this report recommends the use of a wind speed of 55 mph. However, the studies at North Carolina State University (16) and at The University of Arizona both indicate that resonance of structures may occur at wind velocities as low as 17 mph. As discussed in detail in Chapter 5 of this report, for Reynolds' numbers greater than 3×10^5 (which correspond to a wind speed of approximately 28 mph for the monotube structures), the vortex shedding forces will be random in nature. Whether the extrapolation of the deterministic range results into random regions corresponding to wind speeds of 55 mph or 80 mph is valid or not is questionable. Although sign support structures may experience vortex shedding at higher wind velocities (corresponding to the random region), their exact behavior can be best understood under field testing and measurement.

C.3 Applicability to Monotube Structures

As discussed in the previous sections, due to lack of adequate documentation, the origin of $d^2/400$ is not clearly known. The large flexibility of monotube structures makes it impossible to comply with the $d^2/400$ requirement. For the structures studied in this investigation, although the dead load deflections were much larger than $d^2/400$, the stresses were usually well below the allowable levels. Therefore, the lack of compliance with the $d^2/400$ did not seem to cause any undesirable effect on the static behavior of the structure.

As far as the wind-induced behavior of monotube structures is concerned, for the specimens in this study, resonance occurred at extremely narrow ranges of constant wind velocities blowing over a period of approximately 30 seconds. This is a condition which may be very hard, if not impossible, to reproduce in the field. In addition, for the analytical study, the effect of damping of the structure was ignored. Based on the available information, it is believed that at least at wind speeds in the deterministic range, resonance of the monotubes is very unlikely to take place. Clearly, the behavior of the structure under higher wind velocities and its damping characteristics could only be determined after extensive field testing and measurements have taken place.