ARIZONA DEPARTMENT OF TRANSPORTATION

REPORT NUMBER: FHWA-AZ87-179

# ARIZONA'S SALT GRADIENT SOLAR POND

Final Report

Prepared by:
John B. Hauskins, Jr.
Frank Mancini
Rudolf Kolaja
Arizona Transportation Research Center
Arizona Department of Transportation
206 South 17th Avenue
Phoenix, Arizona 85007

October 1987

Prepared for:
Arizona Department of Transportation
206 South 17th Avenue
Phoenix, Arizona 85007
in cooperation with
U.S. Department of Transportation
Federal Highway Administration

The contents of this report reflect the views of the authors who are responsible for the facts and the accuracy of the data presented herein. The contents do not necessarily reflect the official views or policies of the Arizona Department of Transportation or the Federal Highways Administration. This report does not constitute a standard, specification, or regulation. Trade or manufacturer's names which may appear herein are cited only because they are considered essential to the objectives of the report. The U. S. Government and the State of Arizona do not endorse products or manufacturers.

TECHNICAL REPORT DOCUMENTATION PAGE

| 1. REPORT NO. | 2. GOVERNMENT ACCESSION NO. | 3. RECIPIENT'S CATALOG NO. |
|---|---|---|
| FHWA-AZ87-179 | | |

| 4. TITLE AND SUBTITLE | 5. REPORT DATE |
|---|---|
| ARIZONA'S SALT GRADIENT SOLAR POND | October 1987 |
| | 6. PERFORMING ORGANIZATION CODE |
| 7. AUTHOR(S) John B. Hauskins, Jr.<br>Frank Mancini<br>Rudolf Kolaja | 8. PERFORMING ORGANIZATION REPORT NO. |
| 9. PERFORMING ORGANIZATION NAME AND ADDRESS<br>Arizona Transportation Research Center<br>Arizona Department of Transportation<br>206 South 17th Avenue<br>Phoenix, Arizona 85007 | 10. WORK UNIT NO.<br>11. CONTRACT OR GRANT NO.<br>HPR-PL-1(31) Item 179 |
| 12. SPONSORING AGENCY NAME AND ADDRESS<br>Arizona Department of Transportation<br>206 South 17th Avenue<br>Phoenix, Arizona 85007 | 13. TYPE OF REPORT & PERIOD COVERED<br>Final Report<br>May, 1980 - November, 1984<br>14. SPONSORING AGENCY CODE |

15. SUPPLEMENTARY NOTES

Prepared in cooperation with the U.S. Department of Transportation, Federal Highway Administration.

16. ABSTRACT

This research project for designing and constructing a salt gradient solar pond within the State of Arizona was requested by the Arizona Solar Energy Commission during a period when an oil embargo was still a possibility.

The project was built at the Gray Mountain Maintenance Camp of the Arizona Department of Transportation, approximately 50 miles north of Flagstaff on Highway 89.

The purpose of this study was to develop a reasonably low-cost method of generating useful thermal energy from a reusable resource. The solar pond has offered that potential. The salt gradient solar pond is a body of water characterized by unique conditions which enable it to gather and store heat from the sun. The hot solar pond has been used for heating a maintenance building through a heat extraction process. The design of this facility was planned to provide a number of unique design and construction criteria described in this report. The cost estimate for the pond should have been in order of $7.50 per square foot of the pond area. The actual cost was about $13.58 per square foot. The costs were higher because of a rock excavation at the site which took several months to complete. The economics were projected based on a pond with a minimum of 1 acre; this pond is less than one fifth of that size.

It is anticipated that the solar pond concept may become a viable alternative source of energy if the installation cost can be brought down to approximately $2.00 per square foot. The production of energy from such a facility is also dependent upon the quality of routine maintenance and other factors decribed in the report.

| 17. KEY WORDS | 18. DISTRIBUTION STATEMENT |
|---|---|
| solar energy, salt pond, alternate energy sources, space heating, heat transfer | No restrictions, available to the public through NTIS, Springfield, Virginia, 22161. |

| 19. SECURITY CLASSIF. (of this report) | 20. SECURITY CLASSIF. (of this page) | 21. NO. OF PAGES | 22. PRICE |
|---|---|---|---|
| Unclassified | Unclassified | 37 | |

TABLE OF CONTENTS


| | Page |
|---|---|
| INTRODUCTION | 1 |
| Project Initiation | 1 |
| Project Location Selection | 1 |
| SITE SPECIFIC INFORMATION | 1 |
| Site Location | 1 |
| Geology | 1 |
| Vegetation | 2 |
| Climatology | 2 |
| DEFINITION OF SALT POND | 2 |
| What is a Salt Pond? | 2 |
| How does it work? | 2 |
| Why build One? | 4 |
| Economy | 5 |
| HISTORICAL BACKGROUND | 6 |
| A Naturally Occuring Salt Pond | 6 |
| Some of the Salt Ponds in Existence | 6 |
| DESIGN CONSIDERATIONS | 6 |
| Initial Conceptual Design | 6 |
| The Proposed Facility | 8 |
| Energy Usage at the Facility | 8 |
| Philosophy of Design | 9 |
| Unique Characteristics of the Solar Pond Project | 9 |
| Cost Estimate for the Project | 10 |
| Laboratory Model | 11 |
| Plan of Pond Excavation | 11 |
| HEATING SYSTEM DESIGN | 12 |
| Site Plan | 12 |
| Plumbing Schematic | 12 |
| Air-Handler Location Detail | 12 |
| As-Built for the Pond | 12 |
| Backfill Detail | 16 |
| HEAT-EXCHANGER DESIGN | 17 |
| Header Detail | 17 |
| SALT POND CONSTRUCTION | 17 |
| Excavation Process | 17 |
| Plating process | 20 |
| Pond Lining Placement | 20 |
| CONSTRUCTION AND INSTALLATION OF HEAT EXCHANGERS | 20 |
| OPERATIONAL ASPECTS | 21 |
| Initial Start-Up Considerations | 21 |
| The Salt Delivery to the Pond | 21 |
| Formation of the Bottom Convective Zone | 21 |
| Formation of Non-Connective Zone | 22 |
| Initial Salinity Measurements | 22 |
| Operating Characteristics | 22 |
| Instrumentation | 23 |

Variations in Pond Temperature ..... 25
CONCLUSIONS ..... 28
RECOMMENDATIONS ..... 29
BIBLIOGRAPHY ..... 31

## LIST OF FIGURES

| Figure | Description | Page |
|---|---|---|
| 1 | Heating Degree Days | 3 |
| 2 | Salt Gradient Pond - Site Plan | 7 |
| 3 | Salt Gradiant Pond - Plumbing Schematic | 13 |
| 4 | Salt Gradient Pond - Air Handler Locations | 14 |
| 5 | Actual Configuration of Finished Pond | 15 |
| 6 | Backfill Detail | 16 |
| 7 | Heat Exchanger for Solar Pond | 18 |
| 8 | Detail of Heat Exchanger Support Element | 19 |
| 9 | Solar Pond Temperature Profile for July 5, 1983 | 26 |
| 10 | Variations in Pond Temperature | 27 |

## LIST OF TABLES

| Table | Description | Page |
|---|---|---|
| 1 | Costs for the Salt Pond at Gray Mountain | 11 |
| 2 | Solar Pond Sensor List | 24 |

# INTRODUCTION

## Project Initiation

This project was requested by the Arizona Solar Energy Commission (ASEC) to explore the viability of fabricated solar salt ponds as a low temperature thermal source.

Dr. Frank Mancini of the ASEC had performed the initial review of available research which indicated that this type of facility could have a practical application in Arizona. There was a need for a state facility to house the project and to use it both as an experiment and as a practical addition to a facility. The security and safety were prime considerations during the initial stages of the project activities. The Arizona Department of Transportation (ADOT) was the only state agency that had a facility suitable for the type of project.

The decision was made to develop a facility which would be cooperatively sponsored by ASEC, ADOT, and FHWA.

## Project Location Selection

Approximately one acre of land having a proximity to an ADOT facility was needed. Gray Mountain Maintenance Camp was chosen because the facility is relatively large (28 + acres), the entire camp is fenced, and the security is enhanced by the presence of the Department of Public Safety. The elevation is high enough to constitute a large heating requirement. The site was to receive a maintenance equipment building which would constitute a sizeable heating load. The camp was under construction and the addition of the solar pond facility was feasible.

# SITE SPECIFIC INFORMATION

## Site location

The Gray Mountain Maintenance Camp is approximately 50 miles north of Flagstaff on the east side of Highway 89. The site is a gently sloping plateau which extends for a distance of approximately 60 miles north and south at the elevation of 5000 feet above the sea level.

The camp consists of an equipment maintenance building, a maintenance office, field construction offices and the housing for the personnel permanently assigned there. In addition, several Department of Public Safety officers are stationed there.

## Geology

The geology consists of sediments which have become consolidated and form a carbonaceous rock type which has been intruded and slightly altered by connate waters. This represents a classical Kaibab Plateau type of formation. The limestone type rock is fractured. The excavation of this material is difficult and often requires blasting. The difficulty of blasting this type of material is caused by the fracture system which has a tendency to channel the explosive force in unpredictable directions.

### Vegetation

The vegetation in this area is sparse due to the low local precipitation rate and the hostile condition of the soils. The alkalinity prevents the cultivation of plants. The predominant form of vegetation is Russian Thistle (tumbleweeds).

### Climatology

The climatology of the area is typical of the higher plateau regions of Arizona. The windy conditions which prevail are often accentuated by the aeolian transport of soil particles and the resultant duststorms can be severe. The average wind velocity at Gray Mountain is 10 miles per hour at 10 meters (approximately 33 feet) above the ground surface. The annual precipitation is approximately 5 to 6 inches, a measurement that includes both rainfall and snowfall. The overall climate varies from below zero to $100^{o}$ F above.

The heating requirements are of particular interest in this report since the purpose of the salt gradient pond is to furnish energy for space heating. The heating degree days range from a minimum in summer of zero to a maximum in the month of January of 1000. The maximum daily requirement would be approximately 34. This was the number of degree days per day which were used in the pond design calculations (Figure 1).

## DEFINITION OF A SALT POND

### What is a Salt Pond?

A salt pond is a body of water characterized by unique conditions which enable it to gather and store heat from the sun. The characteristics which are common to all salt ponds are: they have surface areas ranging from small (less than one acre) to large (hundreds of acres, e.g. the Salton Sea salt pond project in California); they have depths ranging from about 6 feet to a maximum of 15 to 18 feet; they may or may not be lined and may or may not include additional physical components (such as wave suppressors) which contribute to good performance.

A salt pond consists of at least two, and usually, several layers of salty water with the saltiest layer on the bottom. The bottom convective layer of water contains about 200,000 parts per million of salt. This salt, usually sodium chloride for cost purposes, is mixed thoroughly to provide a uniform solution of brine in the bottom layer. The next layer which may range from 10 to 15 percent or 100,000 parts per million of salt contains a much smaller concentration of brine. The upper layer contains some salt usually around 10,000 to 30,000 parts per million (one to three percent). The characteristics which cause the pond to act as a solar collector are caused by this layering effect. Special steps are taken during the construction and filling stages of the project to insure the establishment of this layering effect during the development of a salt-gradient pond. As time passes, the salinity of a salt-gradient pond may change. This is caused by the thermodynamic processes in effect and the diffusion of the salt into the surrounding waters. Nonetheless, the density of the salt brine layers tend to maintain the gradient effect which was carefully established at the outset. The greatest change which may be noted in the salinity of the various layers is the change in the gradient layer which is the middle layer. This layer which initially has a uniform salinity has a tendency to gradually change to a condition in which it acts as a transition from the low salinity at the surface, to a condition approaching saturation at the storage layer.

### How Does It Work?

The method by which the salt pond operates is probably best explained by an analogy to a storage tank, because, in fact, a salt pond is an integral collector and thermal storage unit. As the sun shines upon the surface

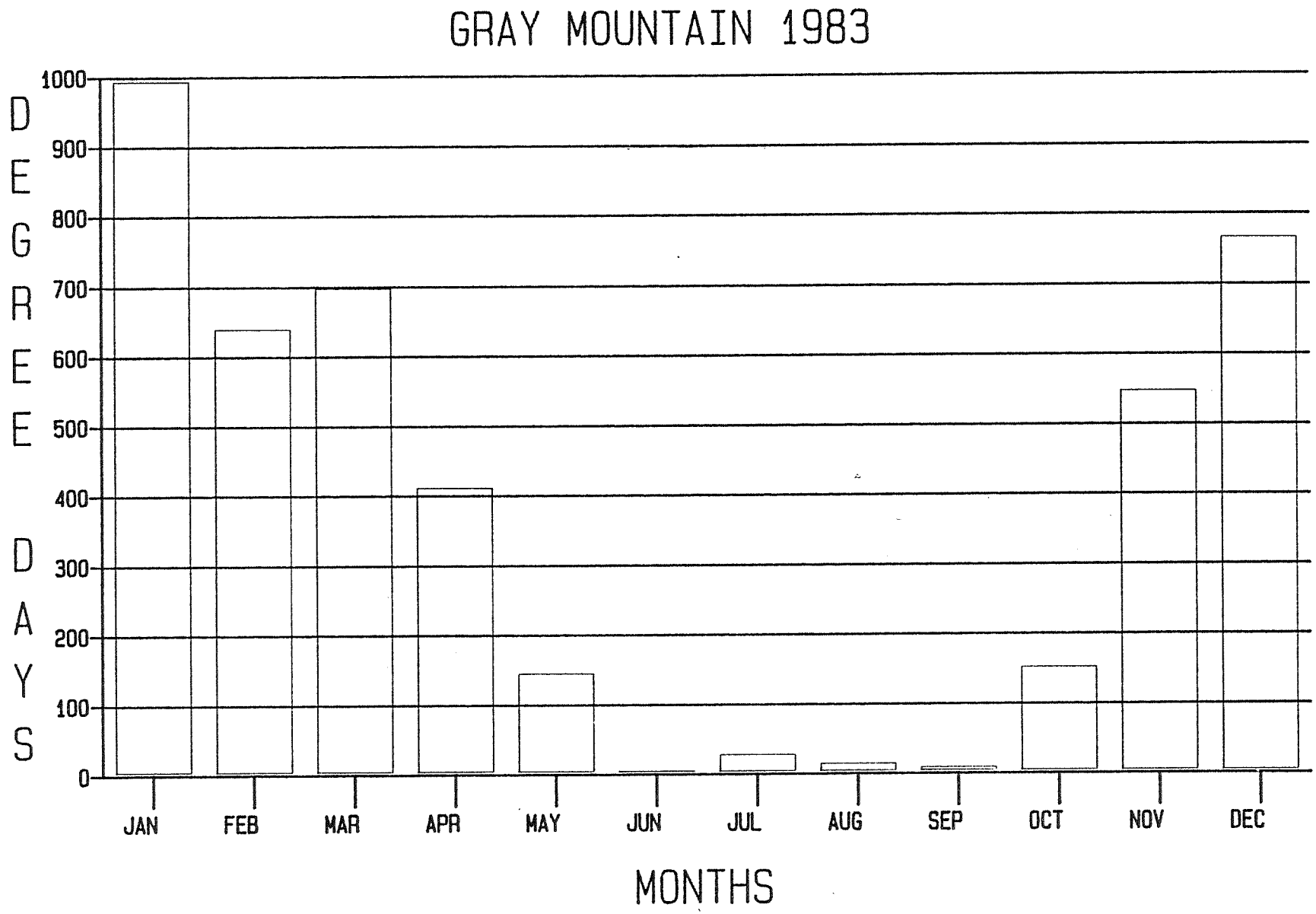


FIGURE 1. HEATING DEGREE DAYS

of the solar pond a certain amount of the incident radiation will enter the water. This is dependent upon a number of factors. For the purpose of a simple explanation it will be assumed that a substantial portion of the energy penetrates the surface. The energy that enters the water will be partially absorbed by the layers and partially transmitted to the deeper layers. As the energy passes through the layers, it encounters the brine in the lowest layer. The remaining energy is either absorbed by the bottom of the pond or it is reflected to begin to travel upward through the solution.

The energy which is absorbed by the surface layer is soon dissipated through the processes of convection or reradiation.

The sunlight is largely absorbed at the bottom of the pond so heating it. In an ordinary water pond this warmer water would be lighter (less dense) than the water above it so that the heavier (colder) water would sink and the lighter (hotter) water would rise creating a convection process. The warmer water then rises to the top of the pond and releases its heat to the atmospere. In a solar pond the bottom layer is initially made so much saltier than the one above that, even though its density decreases as it heats up, it still remains denser than the water above it. The convection is thus suppressed, and the bottom layer remains at the bottom getting hotter and hotter until it reaches an equilibrium temperature which could be close to 212$^{o}$F. It should be stressed that solar salt ponds are low temperature collectors; the fluid temperature emanating from the pond is generally less than 200$^{o}$F.

The energy which is absorbed by the gradient zone is transported to the surface through a conductive (non-convective) process. That is, the gradient zone is a non-convective layer; heat/mass transfer does not occurr in this zone. However, a conduction of some the heat by molecular motion does take place but the magnitude of heat transfer to the surface is small and dissipated to the atmosphere. The energy which is absorbed in the more dense storage zone will not find a path to the atmosphere. As a result, the energy which penetrates to the bottom is stored and dissipated gradually through the processes of conduction and convection to the surrounding earth.

The pond is converting the electromagnetic energy (sunlight) into thermal energy. The thermal spectrum, at the operating temperature of the solar pond, is in the long wavelength region. The long wavelegths are readily absorbed by the water and so the water acts as an effective insulating blanket.

Due to these effects, the energy can be compared with water running into a tank. When the sun is shining, a certain "flow" rate occurs. As the pond heats up, the analogous tank is "filling". Then the energy is lost to the surrounding ground surface. This can be linked to a "leak" in the tank. Additional energy is lost through the surface and reradiation. These effects may also be compared to "leaks". However, as long as the leaks are not as great as the filling rate, the tank fills up. This is exactly as occurs in the salt-gradient pond. After an initial loss to the ground the soil temperature rises and the leaks taper off and the energy level begins to increase. The full tank or hot solar pond then can be used to supply heat to its surroundings by any number of heat extraction processes.

Why Build One?

The applicability and potential of solar ponds in the United States has been a matter for consideration for a number of years. The possibility of developing a reasonably low-cost method of generating useful thermal and/or electrical energy from a renewable resource is obviously intriguing.

The development of the emerging solar pond technology which would permit the fabrication of a combined solar collector and integral storage unit would be very useful if proven to be economical, safe, reliable, and relatively efficient. The evaluation of the above points was part of the reason for the current project. The other part of the reason for the project was to acquire a small heat engine, after the pond was

installed and operating, to study the possibilities of generating electrical power. This was not done due to budgetary restrictions.

Economy

The potential for generation of substantial amounts of power using sunlight has been an area of investigation since the early 1900's. The solar pond offers a solution which may provide some answers to the questions of economy of construction and baseline energy generation and supply. The problem of storage of energy is solved readily by the solar pond. The costs of construction of a solar pond have been quoted as approximately $7.25 per square foot (16, 23). This is for a pond which has a surface area of approximately one acre. However, the experience of this research project has shown the cost of the pond at Gray Mountain to be approximately $13.58 per square foot. The surface area of this pond is 90' x 90'. This translated to an approximate total cost of $110,000. The power which is generated by this pond is dependent upon several factors such as insolation, losses to atmoshere, and losses to the earth.

The losses will normally be quite high. The losses to the atmosphere can be as high as 84 percent. The losses to the earth will be on the order of 2 percent. This leaves approximately 14 percent of the total energy which will be available for useful energy output. These values are the predicted ones and the actual values may vary as shown later. However, with an insolation rate of approximately 300 BTU's per hour during sunny hours, the energy output could be as high as 100 BTU's per square foot per hour. This, when multiplied by the storage zone area of approximately 6,000 square feet results in a predicted output of approximately 600,000 BTU's per hour.

The value of the energy which would be produced would be approximately $24.00 per day. This is due to the cost of propane which has been hauled to the site by truck and costs more than if it were supplied in an urban area. The potential for energy production during a year, considering 300 sunny days, would be approximately $7,200. This would mean that the project would not produce enough energy to produce ecomonic viability due to its small size. The investment would require a payback of approximately $10,000 during a year's period of sevice. Therefore, the project will not produce enough energy to pay for itself. This is based upon more recent performance data than that which was used to develop the justification for the project.

The assessment of the possible methods of generating reusable power is a difficult one. The only power source, other than nuclear, which can be readily developed is solar power. The potential for developing sizeable amounts of solar power depends very largely on the possibility of gathering it and storing it in a fashion which allows its use at any time of day. To date, the only viable method for storing large amounts of energy for any length of time is the salt gradient pond.

Other methods which include the molten salt storage techniques are very high technology and are not developed. The problems with generating either thermal or electrical power from salt-gradient ponds are not insurmountable. The construction costs per unit area may substantially be reduced in large projects which materially affect the cost-benefit ratio.

The purpose of the Gray Mountain pond was to investigate a new technology in a real (uncontrolled) environment. The pond was designed with the best design data that was available at the time. The purpose was to test the viability of such a project in a less than ideal situation, i.e. without any laboratory controls. The climate is more severe than many places in Arizona and the construction costs much higher due to the excavation in vuggy limestone.

## HISTORICAL BACKGROUND

### A Naturally Occurring Salt Pond

The occurrence of the salt pond phenomena was first reported by Von Kalecsinsky in 1902. There was apparently a naturally occurring pond in which a brine was formed due to the leaching of natural salts into the bottom of the pond. Meteoric waters had formed a layer of water on top of the salty one which was nearly fresh and the temperature of the salty layer was much higher than the fresh layer. This pond was the Medve Lagoon in Transylvania.

The possibility of forming artificial salt ponds was first mentioned by Kalecsinsky and later by Block in 1948. The naturally occurring lakes could possibly be simulated by the generation of ponds with brine at the bottom and fresh water on the top. The development of this technology was not more thoroughly explored until the 1970's due to the abundance of low cost fossil fuels.

### Some of the Salt Ponds in Existence

The oil embargo in 1973 caused several nations to rapidly assess their position with regard to energy. This assessment led to the search for alternate sources of energy which could provide a large amount of renewable process of heat or electrical power. The solar pond was one of the technologies selected for its potential for generation of large amounts of energy.

In Israel, the construction of two experimental ponds took place in the late 1970's. the Yavne and the Ein Bokek ponds were designed to evaluate the thermal extraction and electrical generation potentials of the solar ponds. The Ein Bokek project is particularly interesting since it has equipment in place (Rankine Cycle) which will allow the generation of up to 150 kilowatts of electrical power. The operation of this pond has indicated that the potential exists for the practical use of solar ponds in the United States as well.

Other ponds which have been constructed are the Eilat pond and the Dead Sea Potash Works pond in Israel. Ponds which have been built for research are: The Desert Research Institute pond in Nevada, the Miamisburg pond in Ohio, the Ohio Agriculture Research and Development Center pond in Wooster, Ohio, the University of New Mexico pond and the Farm Science Review pond.

The above ponds range in size from 100 square feet to a maximum of 20,000 square feet. The gathered information has varied in complexity and technical content. The overall consensus seems to be that the solar pond technology is economically as well as a technically feasible, and capable of providing a long term satisfactory performance.

## DESIGN CONSIDERATIONS

### Initial Conceptual Design

The design of the solar pond facility for the Gray Mountain Maintenance Camp was planned to provide a number of unique design and contruction criteria.

The location of the pond in the extreme northwest corner of the maintenance camp (Figure 2) was established by personnel of the local District office, maintenance camp officials, representatives of the Arizona Solar Energy Commission, Arizona State University, and the Arizona Transportation Research Center.

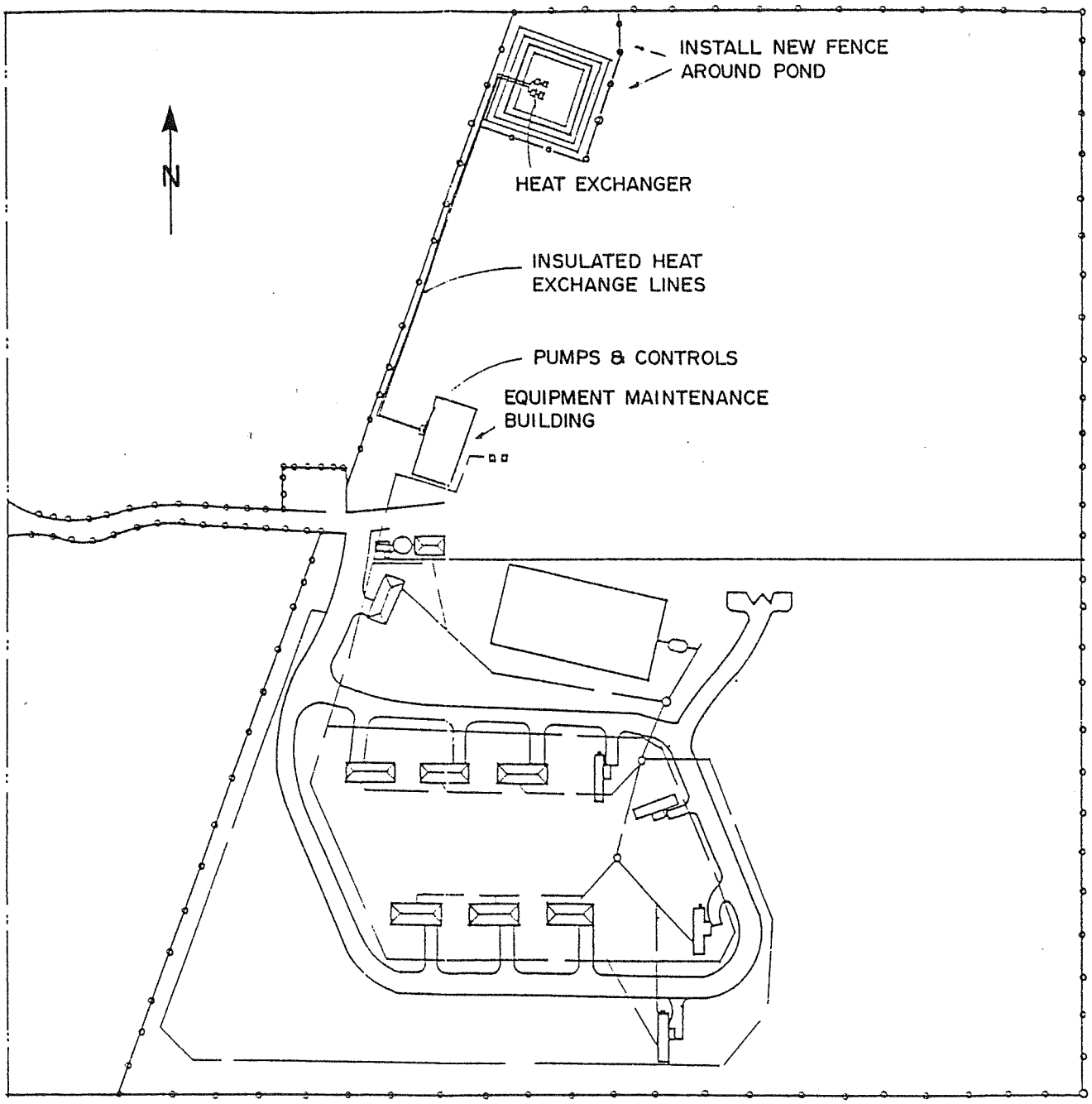


FIGURE 2. SALT GRADIENT POND - SITE PLAN

This made the pond easier to secure with chain link fencing. The proximity of the pond to the building was not as originally desired, but the tradeoffs of the location at out-of-the-way place and the fencing savings offset the thermodynamic considerations. The necessary long pipe runs were made relatively efficient by connecting them in an insulated trench.

The Proposed Facility

The selected facility to use the energy was a maintenance equipment storage building (50 feet wide, 100 feet long, ceiling height of 20 feet minimum) to be constructed on the site at about the same time as the solar pond.

Initial considerations undertaken to determine the type of energy which was to be generated and used indicated that the overall pond efficiency would be approximately fifteen percent on a thermal conversion basis. The resultant thermal energy if it were to be used in an electrical generation scheme would provide an additional efficiency factor of perhaps eight to nine percent. The calculations of efficiency result in an overall efficiency (in the electric power generation mode) of approximately one to two percent. This was too low for the project at hand. The decision to use the power in a direct thermal mode was made.

The size of the solar pond was determined in cooperation with Dr. Frank Mancini and Dr. Charles O'Bannon. The data which they provided and the measured data from the project site have been integrated to provide an overall picture of the design philosophy.

Energy Usage at the Facility

The maintenance equipment storage building to use the heating energy generated by the pond was a large metal building.

The heating load calculations indicated that the total external area of the metal building is 11,277 square feet. The thermal energy requirements would be dependent upon normal conduction, infiltration, floor losses, wind factors and the temperature differential between the indoor environment and the exterior of the building. The insulation at the building is two inches of fiberglass with "R" value of 7.24. The reciprocal of R, the thermal conductivity, is 0.138 BTU's per square foot per hour degree. The climate determines the amount of temperature differential and the design heating degree days used was 34.

The floor losses were approximately 21 times the length of the perimeter of the floor. The perimeter is 300 feet and the total losses would be 151,200 BTU's per day. The total heat loss from the walls and roof would be 37,350 BTU's per degree day; the total losses from the walls and roof would then total 1,269,900 BTU's.

Using a wind amplification factor of 1.1 and infiltration factor of 0.38 the total heat loss is 1,879,452 BTU's per day. This translates to an hourly figure of 78,310 BTU's. This amount of heat would be required to maintain a constant temperature in the building environment. The amount of heat actually supplied to raise the temperature must be considerably higher than the above figure. The amount of energy which can be supplied by the pond heating system is approximately 600,000 BTU's per hour. The reason for developing such excess capacity will be apparent when one considers the operation characteristics of such a system.

The operation of such a system is to be automatic. It is desirable to have a system which will provide heat when the thermostatic controls call for it and will not remain in an operating condition constantly. The system will sense the need for heat and turn on the appropriate air-handlers. The heat will be delivered in a relatively short period of time (in the order of 10 minutes). The temperature increase will then cause the thermostat to shut off the system. The duty cycle for the air-handlers will be less than twenty percent.

The other reason for excess capacity is the ability of the system to deliver heat energy during a period when the pond temperature is not at its highest. The amount of BTU's delivered at a maximum pond temperature will be 600,000 per hour but the amount of heat delivered when the pond temperature is only 100 degrees will be only 200,000 BTU's per hour.

The amount of heat delivered to the air in the air-handlers at any time will exceed the amount of heat being lost from the building by at least one hundred percent. This means that in a worst case, the system will operate on a fifty percent duty cycle (maximum) and will cycle on and off at intervals determined by the deadband. The target cycle time was 10 minutes. This would mean that with a proper deadband the system would turn on for a period of 10 minutes then off for 10 minutes during a time of day when the pond temperature is at a minimum and when the heating load is at a maximum.

During the operation of the system, it was noted that an additional factor, which could not be allowed for in the design, occurred. The maintenance personnel at Gray Mountain, often leave the roll up doors open when they are preparing to move equipment out or in for the day. Also, there have been periods during which the doors have been open for several hours. This causes an unusually high load on the heating system and may exhaust the pond of usable heat in a few days. The heat requirements under these conditions can easily attain a value of millions of BTU's and the heating system would have to operate continuously to maintain the building temperature. This will explain some sudden high loading conditions which occurred during the operation of the pond facility. The total output from the pond for a day can be extracted in a matter of three hours under the above "door open" conditions. This is a situation which should be considered when constructing a facility of this type.

Philosophy of Design

The solar pond was designed by ATRC (Arizona Transportation Research Center) personnel based upon input information supplied by several sources. The pond was sized with the use of the guide developed by Solar Energy Research Institute, Golden, Colorado. The final pond size was established by consensus after discussions with the ASEC (Arizona Solar Energy Commission) and ASU (Arizona State University). The final pond size was to be 78 by 78 feet at the bottom and 90 by 90 feet at the top.

During the initial design considerations, the pond was evaluated with not only Sodium Chloride but also other salts. The other salts considered were Magnesium Chloride and Potassium Chloride. The final determination to use Sodium Chloride was based upon cost and availability considerations not on the effectiveness of the particular salt brines.

The possibility of infiltration of the brine into the fractured limestone of the area resulted in the choice of a liner. The side-slopes are one to one which was the steepest slope that could be practically built with the available materials and equipment.

Unique Characteristics of the Solar Pond Project

Some of the typical characteristics experienced during the design and construction period of this project will serve to show the output qualities of the project common to solar pond projects. They are:

A. The pond is not a predictable entity but is subject to the vagaries of the local weather (this is a characteristic of any solar device).

B. The construction of such a pond is difficult due to the requirements for precision excavation and the need for a clay liner with a smooth surface.

C. The method for extraction of the heat is somewhat difficult due to the need for the heat exchanger to be corrosion resistant because of the presence of salts.

D. The heat-exchanger will have a tendency to float due to the buoyancy of the heavy brine. Even weights which are designed to hold down the heat exchanger must be oversized to allow for the additional buoyancy.

E. The pumping system will experience delays when called upon to deliver heat due to the long distances involved from the pond to the building. This can severely affect the heating systems performance.

F. The necessity of excavating in rock can make the development of a perfectly square pond difficult. This makes the specifications for the liner more difficult to develop.

G. The liner must be designed to withstand the stresses of construction, the temperatures and chemical degradation of the salt brine coupled with the harsh Gray Mountain environment.

H. The plumbing must be designed to withstand the corrosive effects and the possibility of electrochemical corrosion.

I. The air-handlers must be designed to accommodate incoming fluid at different temperatures. There is no definite design point around which to size the air handlers because of the vagaries in the pond's thermal output. The fluctuations in the output of the pond are a direct result of the fact that solar devices have no fixed design points, only a design performance range.

J. The system has to be carefully configured to avoid undesirable "cycling" effects.

K. The critical water supply has to be provided to prevent the loss of excessive amounts of water through evaporation.

L. The entire system has to be monitored by a control system which will regulate the pumps and controls and will not allow operation in a mode which will jeopardize the gradient layers in the pond.

Cost Estimate for the Project

The cost estimate for a pond according to Lin (7) should have been in the order of $7.50 per square foot, or $60,750 total. The actual cost was about $13.58 per square foot, or about $110,000 total (Table 1). The costs were higher because of the rock excavation which took several months to complete. The additional costs were expected due to the consideration given to the relative scope of the project and the remote location for the project. The economics projected by Lin were based on a pond with a minimum size of 1 acre; this pond is less than one fifth of that size.

TABLE 1. COSTS FOR THE SALT POND AT GRAY MOUNTAIN

| ITEM | COST |
|---|---|
| EXCAVATION | 5,204.00 |
| SALT | 7,441.20 |
| POND LINER | 12,031.86 |
| PLUMBING, PUMPS, AND CONTROLS | 35,889.48 |
| LABOR | 12,637.24 |
| HEAT EXCHANGER | 6,930.00 |
| HEAT EXCHANGER FLUID | 1,056.00 |
| SIX FOOT CHAIN LINK FENCE | 3,654.00 |
| TELEPHONE | 298.90 |
| INSTRUMENTATION | 4,950.00 |
| TOTAL | 110,092.68 |

Laboratory Model

A lab model of a solar pond was constructed at the ATRC lab to verify its functional principles. The questions to be answered were relative to the thermal characteristics of the storage layer and the insulation characteristics of the pond surface layers as well as questions relative to the ability to fill the pond by several different methods.

The model was constructed to simulate the behavior of a full scale pond. The dimensions of the model were (approximately) 1' wide, 1-1/2' high, and 3' long. It was filled with a brine layer at the bottom (about 3" thick), and a gradient layer was established over the brine. A lamp with a 100 W bulb was set directly over the model to simulate the solar input. It was found that the model did respond to the thermal input from the lamp as predicted by the mathematical model of Zangrando (20).

Plan of Pond Excavation

A plan drawing prepared during the initial phase of the project was to illustrate the desired construction configuration for the pond itself. Vertical and horizontal projections of the pond were included to aid in excavation.

## HEATING SYSTEM DESIGN

### Site Plan

Site-plan included all the connective piping which would transmit the heat-exchange fluid from the pond to the building.

The plumbing between the pond and the building, which is below ground, is insulated copper encased in a foamed, in-place, high-temperature urethane type of insulation.

A water line was installed in the utility trench during the construction to provide the capability of filling the pond from a shut-off valve located near the north-east corner of the building.

### Plumbing Schematic

The heat in the pond is extracted by the heat-exchanger modules and the heat-exchange fluid conveys it to the 200 gallon insulated storage tank located in the building. The circulation rate for the large pump is 30 gallons per minute. The control thermostats call for heat to the North or the South end of the building. This in turn activates the contactor for that particular air-handler. The pump which circulates the heat-exchange fluid will also be activated. There are two pumps, one for each air-handler. The air-handler goes on and the heat is delivered to the building.

Several things are different in this schematic from conventional heating systems (Figure 3). The inclusion of two coils is an example. The need for two coils is due to the heat-exchange requirements and the flow rates required by the system. In addition, the coils are designed to perform at a fluid input temperature of $180^{O}F$. The pond will deliver varying input temperatures which will range from as high as $180^{O}F$ down to $100^{O}F$. During this transition, the exchange rate varies in a ratio of about 3 to 1. This means that the extra coils will deliver extra heat when the differential pond temperature is low.

Inclusion of the screen filters, etc., helps prevent particulate matter from intruding into the system.

### Air-Handler Location Detail

The air-handlers are horizontal type suspended from the roof support beams in the metal building, 15 feet from the floor. The thermostats are independently located to be on the steel support beams on the East wall (Figure 4).

### As-Built for the Pond

Due to the rock in the soil the pond bottom was not built as shown on the original excavation plan. In order to measure the quantities required for the filling and the generation of the layers, it was necessary to know the actual dimensions. The as-built sketch shows contours which were developed showing the actual configuration of the finished and lined pond (Figure 5). The low section is where the heat-exchangers are located. The heat exchange modules are designed to promote convective heat-transfer in the storage zone. The piping is located approximately 12 inches off of the pond floor. The hot liquid is conveyed to the middle of the West side of the pond to enable the extraction of heat to take place. Due to the bouyancy effects of the heavy brine, several sections of 10 inch "I" beam were coated with epoxy and placed on the support feet of the heat exchange modules to prevent the modules from floating to the surface of the pond. In the event the modules need to be removed, the heat exchanger can be emptied and the modules floated to inspect or repair them.

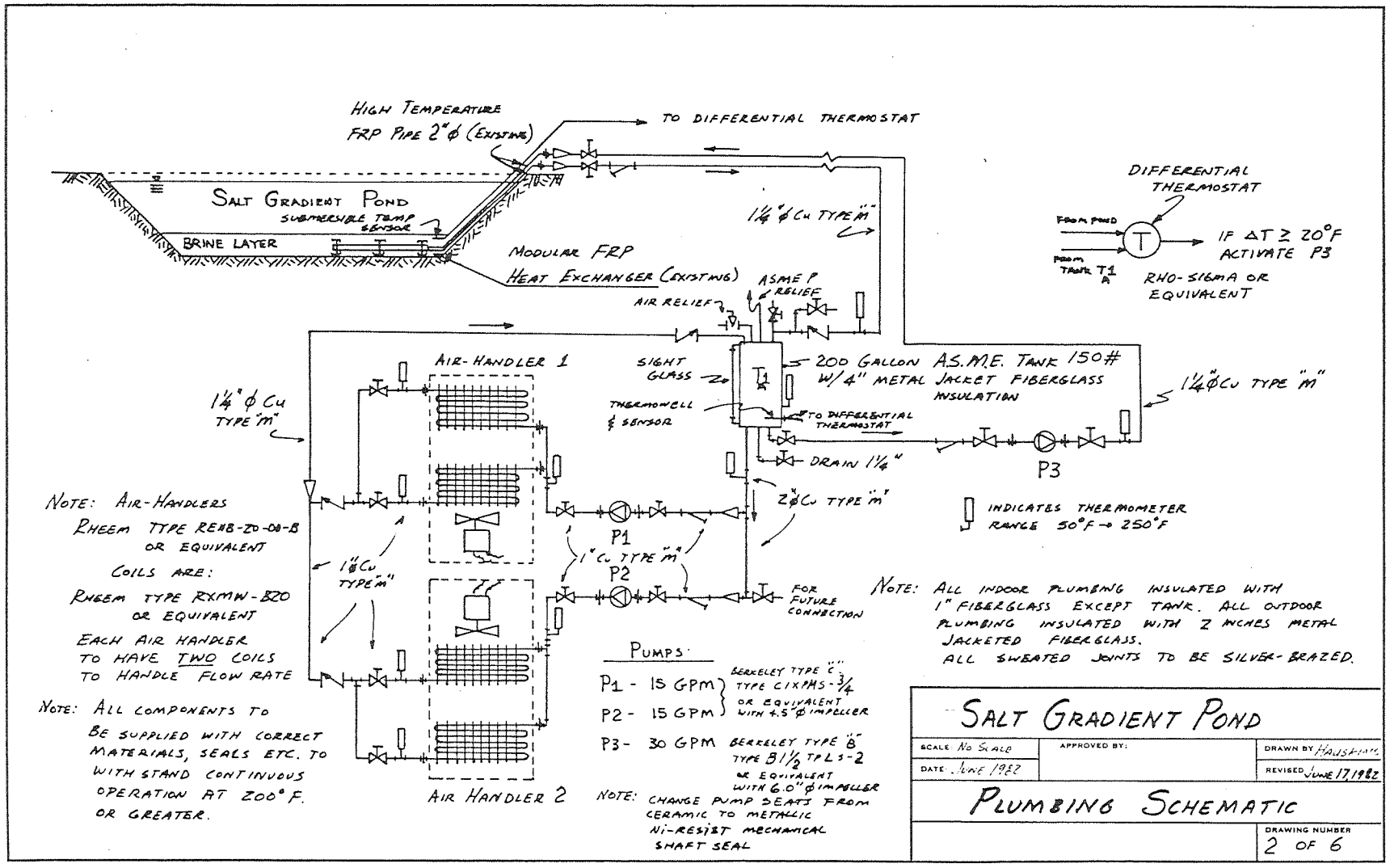


FIGURE 3. SALT GRADIENT POND - PLUMBING SCHEMATIC

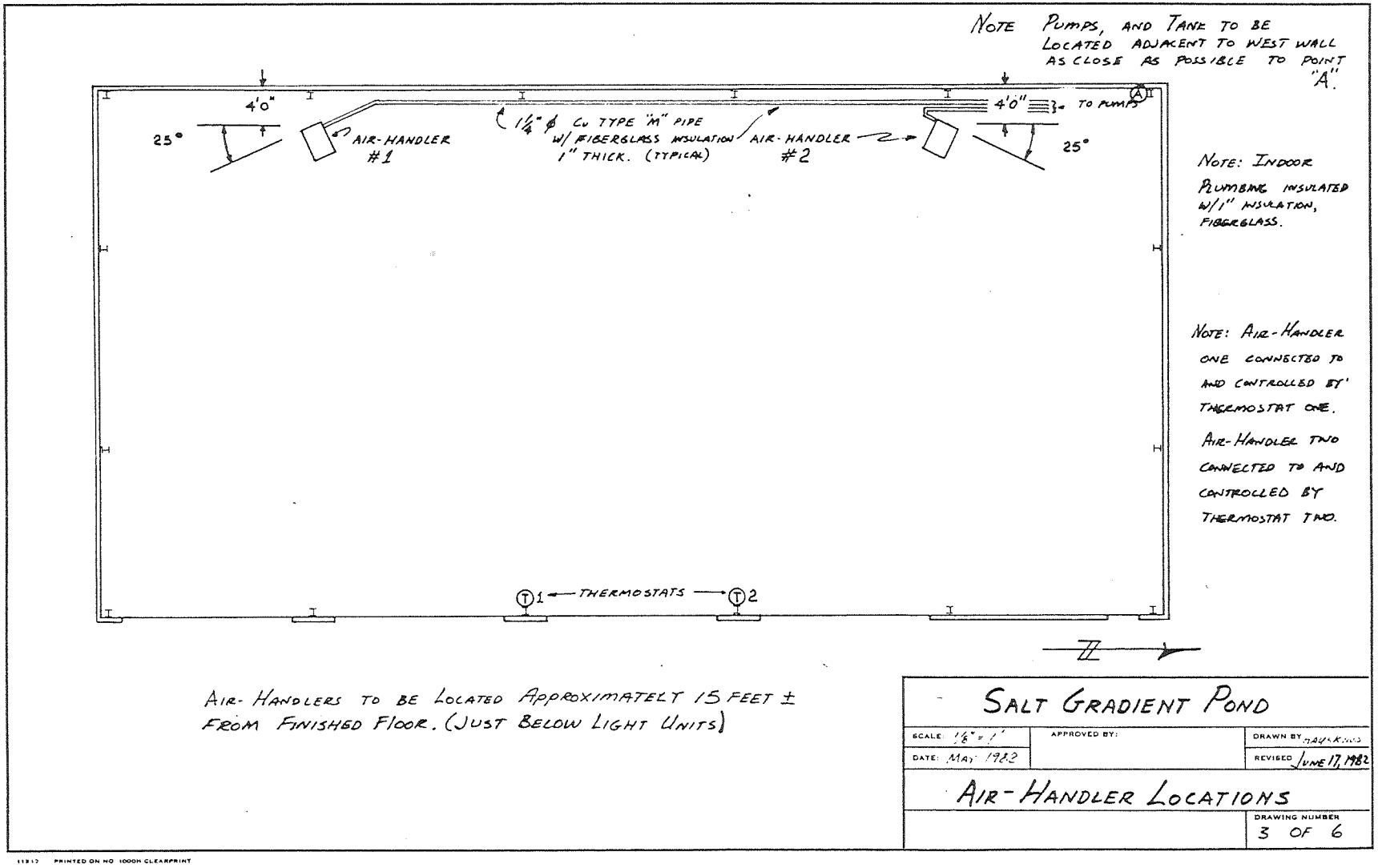


FIGURE 4. SALT GRADIENT POND - AIR-HANDLER LOCATIONS

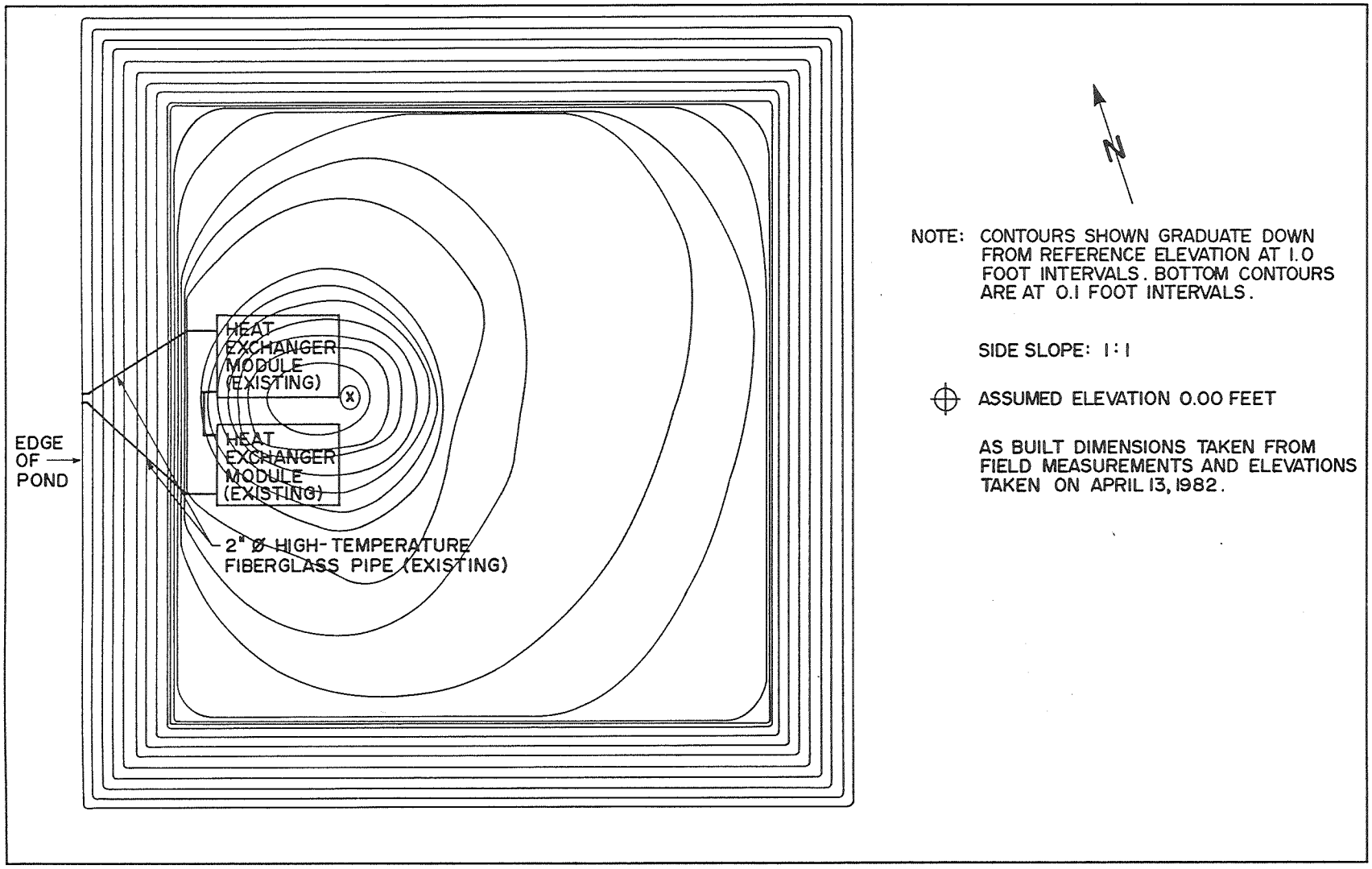


FIGURE 5. ACTUAL CONFIGURATION OF FINISHED POND

Backfill Detail

The lines which were installed between the building and the pond were necessarily insulated. The method of installation using the high-temperature foamed in-place urethane foam is shown on the backfill detail. The lines were located adjacent to the fence to prevent any damage from heavy equipment running over them. The reason for burying them is not only to prevent physical damage, but also to provide extra protection from the weather conditions which prevail at this site (Figure 6).

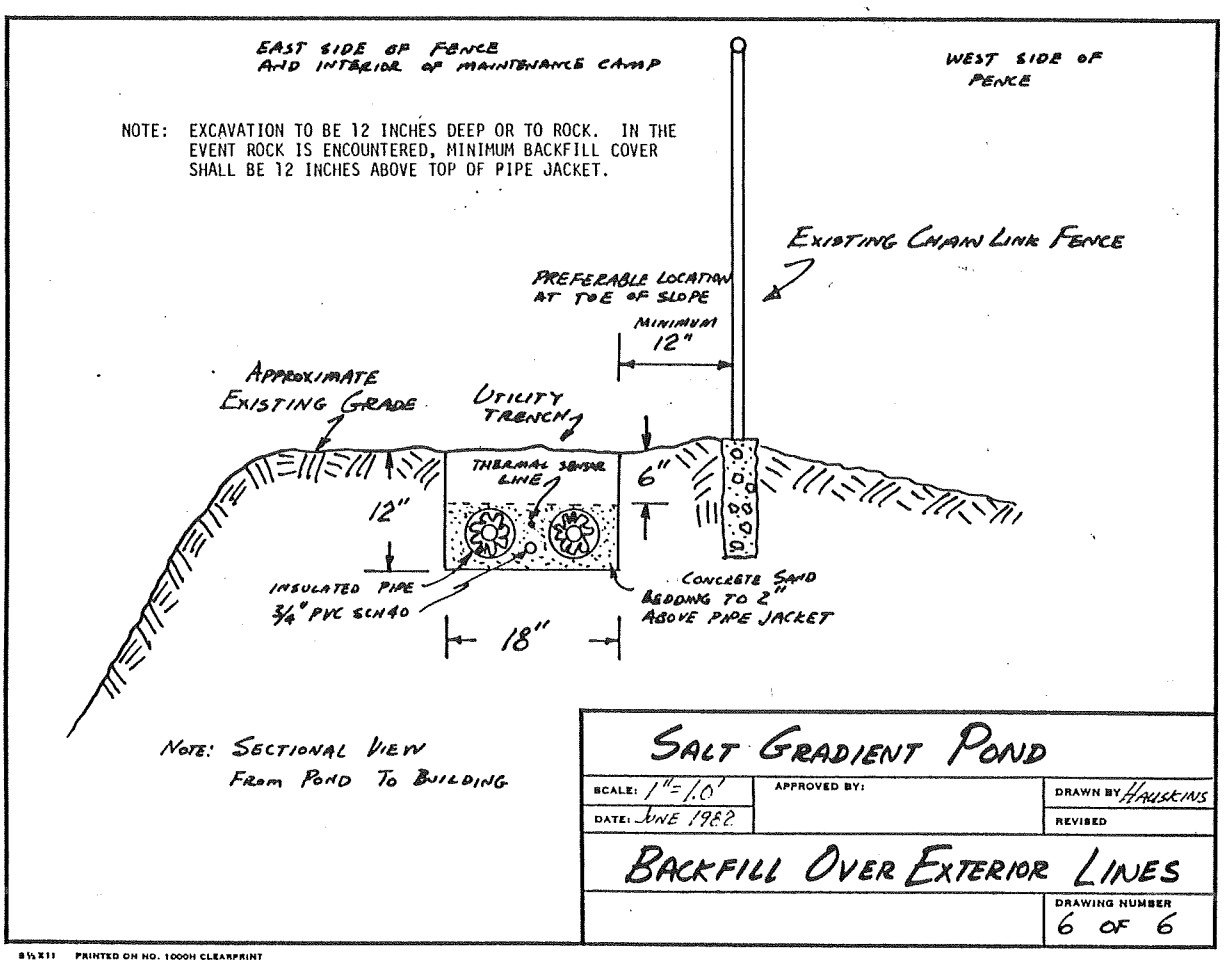


FIGURE 6. BACKFILL DETAIL

## HEAT-EXCHANGER DESIGN

The heat-exchanger was designed to be constructed of two modules which have an appearance similar to the isometric drawing which is included in this section (Figure 7). The heat-exchanger is constructed entirely of non-metallic materials. The support elements are manufactured of Bis-phenol resin bonded glass substrate material. The heat exchange tubes are constructed from a special filament wound high-temperature fiberglass pipe. The design formulas used were the ASHRAE formulas modified by information provided by the engineers and research personnel of the pipe supplier.

The heat-exchanger modules consist of a series of parallel spaced fifteen foot long 2 inch nominal diameter pipes. The number of tubes per module is 16. The tubes are offset in a diagonal fashion to promote good thermal characteristics. The support elements are placed at the ends and in the middle. This is to eliminate stresses which would be encountered not only in service but during installation.

### Header Detail

The use of Nylon fasteners required the construction to include room for a number of bolts and the spacing to avoid stress concentrations. The bolts are recessed into the support elements to prevent any damage to the fragile liner on which the entire assembly rests (Figure 8).

In order to effect a cost savings on the project, the requirements for two different molds for the structural elements was eliminated by modifying the two elements slightly to allow the use of the same element for both purposes. It can be seen from the revision sheet that the vertical element and the horizontal support element are identical. Only one mold is thus required.

## SALT POND CONSTRUCTION

The construction of the project proved to be much more difficult than first thought. The following is a descriptive narrative on the construction process. It is to illustrate the difference between the design phase and the construction phase. The design phase was to develop the information and data which would be necessary to construct the project from start to finish. The construction data, however, will serve to illustrate several factors that the design could not and did not anticipate.

The project, due to its research nature, was constructed by three different groups. This does not lead to a good efficient method of building a project. The excavation and the actual pond was built by maintenance; the plumbing and air-handlers, etc., were installed by an independent contractor. If the pond could have been constructed by the independent contractor, the construction costs would have been more in alignment with Ed Lin's estimates quoted earlier.

### Excavation Process

Initially, the excavation had to be drilled and shot. The native material was a rock and did not lend itself to precise embankment control. The material was excavated and pushed with a dozer to form the embankment of the pond. The total rise above the natural grade in the area outside the pond was 3 to 4 feet. Therefore, there was no need to waste material from the excavation process or to haul in additional fill to bring up the embankments to grade.

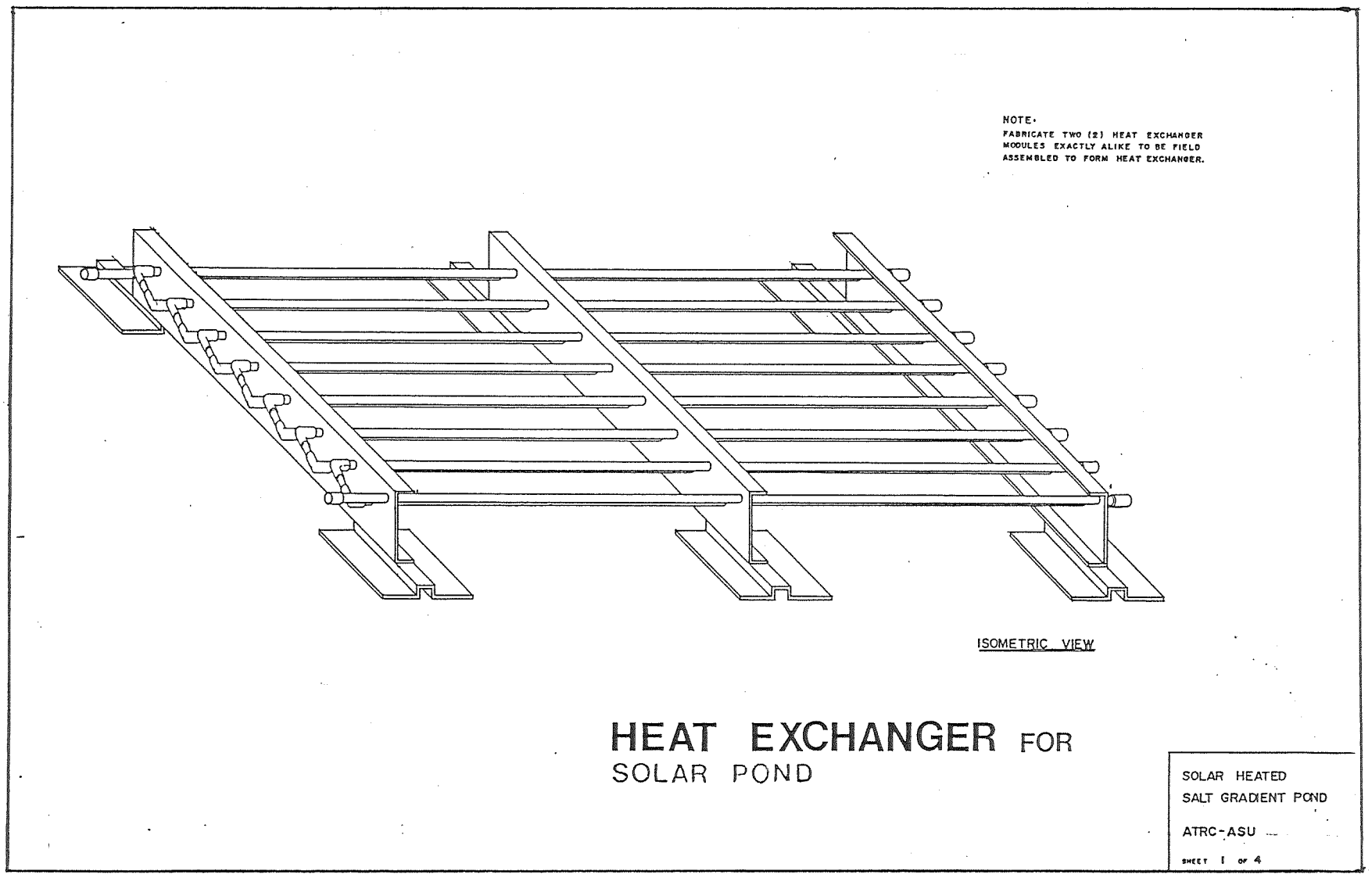


FIGURE 7. HEAT EXCHANGER FOR SOLAR POND

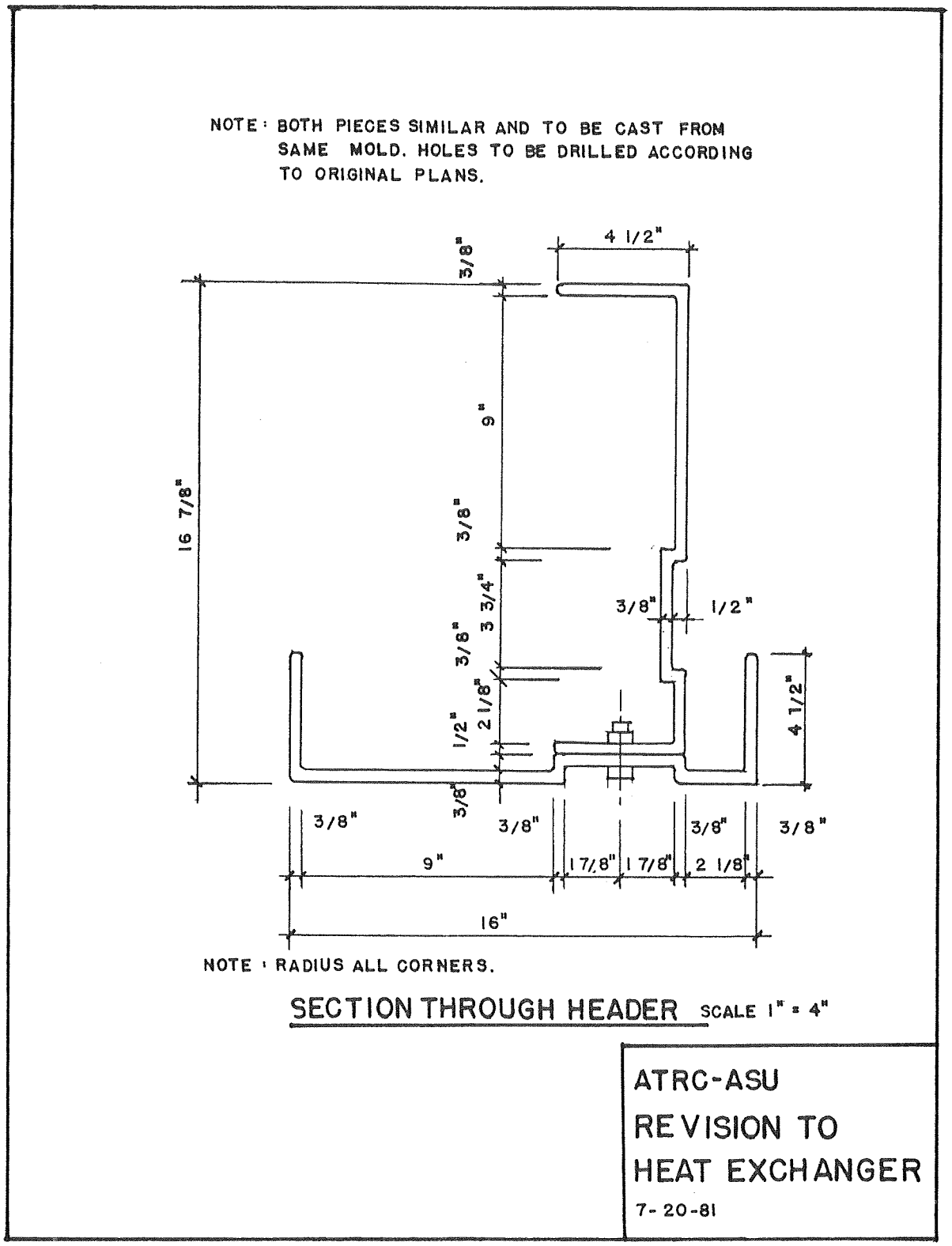


FIGURE 8. DETAIL OF HEAT EXCHANGER SUPPORT ELEMENT

Plating process

The clay which was proposed for the clay plating was not used initially. Another source of clay was selected by inspection and this clay was trucked into the pond site. The clay contained a large quantity of oversized rock which rendered this material unsuitable for the project. This material was inspected by the project engineer and rejected. New material was hauled in and the clay plating process resumed.

The clay was placed over the rough embankment to remove the severe undulations which were caused by the native material and to provide a smooth surface on which to place the liner. As the plating process was completed, the slopes were monitored for uniformity and line and grade by several techniques including using a level rod to check the slope distance.

The squareness of the pond and the maintenance of the toe of the slopes was monitored by means of a stringline and was necessary for reasons mentioned elsewhere in this report. The plating thickness was a nominal 12 inches.

Another construction problem arose during the plating process. Rain occured which, due to the low permeability of the clay, was trapped in the pond. This water had to be pumped out prior to the next construction steps. Although the clay was quite low in permeability to meteoric waters, it was suspected that the clay would have a much higher permeability to the saline solutions which would be subsequently placed in the pond. This was part of the reason for the decision to install a liner.

Pond Lining Placement

The liner for the pond was a chlorinated polyethylene reinforced by a two-way fabric reinforcement sandwiched in the middle of two layers of plastic. The 45 mill thick liner weighs about 0.5 pounds per square foot.

To provide a secure method for fastening the liner around the perimeter of the pond, an anchor trench was used. Since the liner contained a large number of wrinkles the backfill material had to be removed from the anchor trenches to enable the necessary movement. This was accomplished with ADOT and the supplier's forces. This operation was difficult due to the fact that the liner was one piece and was fabricated at the factory to a 120 by 120 foot size. In retrospect, the liner has performed very well since it was installed. The current appearance indicates that it has weathered well.

## CONSTRUCTION AND INSTALLATION OF HEAT EXCHANGERS

The heat-exchanger modules were constructed by an independent contractor. The modules were delivered to the job site by ADOT personnel.

The installation process was performed during the pre-dawn hours to utilize a natural phenomena which was the formation of ice crystals on the liner at night. The modules were lifted from the truck on which they were delivered and lowered into the pond by means of a large rope harness. The modules were allowed to slide slowly down the side of the pond and guided into their final location by means of guide ropes and the low friction coefficient of the ice crystals prevented any interaction between the modules and the pond liner.

The plumbing connecting the modules together was joined using the conventional tapered joints which are typical of filament wound pipe.

## OPERATIONAL ASPECTS

### Initial Start-Up Considerations

When the pond was completely constructed, the next step was to arrange to place the proper salt content in the pond and then place any equipment prior to filling the pond. The research strategy for performing these functions was as follows:

### The Salt Delivery to the Pond

The salt was to be delivered in bulk form with 100 per cent passing the number 30 mesh screen. The moisture content was less than 1 percent when the salt was delivered. The amount of salt ordered was 212 tons. This was to be delivered in 9 tractor-trailer rigs to the job site and dumped from end dump type trucks directly into the pond on the South side.

In order to place that quantity of salt into the pond without the liner being damaged, the liner had to be protected from damage. The solution to the problem was to construct an abrasion shield from two layers of 10 ounce canvas and several sheets of one-half inch plywood. This shield was then anchored to the soil with wooden stakes and rope at the top of the southern side of the pond. The trucks then could back up to the edge of the pond and the salt naturally poured into the pond and the material which impinged on the side was protected from hitting the liner.

When the amount of salt involved reached the bottom of the pond after sliding down a 10 foot ramp, there was a very real possibility that the salt could tear the liner when it hit the bottom. To prevent this occurrence, the pond was filled with approximately one foot of water to prevent the salt from hitting the bottom directly. The abrasion shield and the water cushion prevented the salt from damaging the liner.

### Formation of the Bottom Convective Zone

Once the salt had been delivered to the pond site, some of the salt had to be removed to the side of the pond for stockpiling. This stockpile was built by the use of a backhoe which could reach into the pile of salt and remove approximately 20 tons for maintenance purposes. The salt was stockpiled on the East side of the pond directly adjacent to it. The reserve stockpile was protected by a piece of polyethylene which was anchored by large rocks.

The formation of the initial brine layer was accomplished by adding enough water to form the lower layer and the diluted upper layers. The methods which have been used in the past seemed somewhat cumbersome so it was desirable to develop a simple technique for forming the necessary layers. The proper amount of water was added to form the brine for all three layers (e.g. the upper convective zone, the non-convective zone, and the bottom convective zone) at once. The idea was to make a large amount of concentrated brine in the bottom of the pond. Then the concentrated brine would be recirculated and diluted to form the upper layers.

The method chosen was actually simplified, even more than originally thought, by the discovery that the natural tendency for the brine layers to form would allow the direct dilution of the lower layer, without the complicated mixing apparatus which was planned initially. The brine layer was approximately 3.5 feet in depth. The chosen target depth of the concentrated bottom layer was to be approximately 2 feet in depth. Because of the method used to fill the pond and create the salt gradient the final thickness of the brine layer was 3.5 feet. The additional 1.5 feet was obtained due to the mixing that occurred when the pond was filling and the salt

gradient was, simultaneously, being established. This 1.5 feet plus the target 2 foot depth gives the final 3.5 feet thickness of the brine layer.

The filling of the pond was accomplished by means of a temporary two inch water line which was installed during construction to aid in the filling process. This line was approximately 800 feet in length and was connected directly to the output of the well. This allowed the filling to take place without the interruption of the water supply which by now was supplying water to the eleven residences located on-site. The water delivery was approximately 25 gallons per minute. This was rather slow and took approximately 10 days to reach the required depth (in addition to the 1 foot of water initially placed in). This was not accomplished in a continuous period, since the need for water to supply the residences was a priority.

The level was brought up to a taped mark on the side of the pond and the initial layer was to be formed from that point. The dissolution process was facilitated by the use of three persons. The first person was to man a three inch pump which would pump approximately 200 gallons per minute. The second man was to handle a shovel which would help maneuver the salt toward the area being sprayed with water and the third man would also maneuver the salt with a shovel or assist the "pump" man as needed. The process worked quite well and in approximately two days, the initial layer was formed. The necessity of moving the pump from the middle of the pond to the edges was noted. The mixture was formed with relative ease.

Formation of Non-Convective Zone

Once the bottom convective zone was formed, the second layer was to be "floated" on top of the existing layer. The fresh water supply from the well was again activated. The formation of the second layer was facilitated by the slight mixing of the new water with the old. After approximately 10 inches of fresh water had been placed on the brine, the temperature in the pond began to rise. The temperature of the bottom layer was approximately 55 degrees Fahrenheit when the bottom layer was formed. When the temperature rise began to occur, the temperature rapidly (in a few days) rose to $110^{o}$F. This gain of heat greatly facilitated the dissolution process. The remaining amount of salt which had not gone into solution, rapidly dissolved. The upper convective zone was formed by filling the pond to desired depth of approximately 6 feet, after both, the non-convective and the bottom convective zones were in-place.

The pond, once it was filled, automatically began to heat and the temperature after only a month or so was measured at approximately 170 degrees Fahrenheit. This accurred during the spring of 1982 when the pond was first installed.

Initial Salinity Measurements

In order to verify the development of the salt gradient, the measurements were taken at five locations in the pond. The salinity was determined by using a sampling thief and then weighing the sample, drying it and by means of gravimetric determination calculating the salinity by weight.

The salinity ranged from a maximum of about 300,000 parts per million in the storage zone to about 40,000 parts per million in the surface zone. The non-convecting layer had a salinity which varied from 200,000 parts per million to a minimum of 100,000 parts per million. This was a verification that the salt gradient was established as planned. The reason for the inordinately high level in the bottom layer was the addition of excess salt in the storage layer to insure the maintenance of the storage zone. At the time that the gradient was checked the water level was low but was brought up to the needed level soon after.

Operating Characteristics

The operation of the pond was not possible until the installation of the heat extraction equipment was accomplished. Once the equipment was in place, the extraction of heat was possible. The operation of the heat

extraction process would continue to maintain a 200 gallon tank of hot heat exchange fluid in the building. The reason for the reserve tank of hot oil was to prevent delays which would occur due to the amount of time necessary for the pump to circulate hot oil from the pond to the building. This could take quite a period of time. The delays without the hot storage could range from approximately one minute up to as much as 1.5 minutes after the thermostat called for hot air and the hot oil reached the heat exchanger in the air-handlers. This would cause the system to cycle and the heating would have a tendency not to operate as efficiently as possible. The decision to include hot storage reduces the delay to delivery of hot air to approximately 10 seconds.

While the air-handlers are running, the amount of heat extracted from the pond equals approximately one to two degrees per hour of running time. This is not a high figure since the air-handlers should only operate a maximum of 20 to 30 per cent of the time. This would mean that during a cold evening (calling for heat) the system would have to supply an amount of heat which would be equal to approximately 2 to 3 degrees of pond temperature. During the day the pond would gain as much as 10 degrees back again and the process would be repeated the next evening. The actual heating scenario is somewhat different however. The requirements for the rollup doors to be open during the maintenance operations causes the loading to skyrocket. The amount of energy which can be required is up to 600,000 BTU's per hour. This type of requirement can severely tax the heating system. The amount of time to recover from such a use of energy can be several days. This is assuming that there are no further occurences of the large energy usage. In fact, the pond did experience this type of use during the initial breaking in period and the recovery was difficult as expected. The operation of a pond of this type requires the balancing of the normal practices of an agency with the awareness that care needs to be excercised during the use of a source which is regulated by the availability of the solar resource. The disregard of the potential for managing energy use and the wasting of such a resource, will be a very expensive lesson in energy management in the long run. The current costs of energy are reasonable, however, there are the effects of cost escalation with time to account for. The costs in remote sites such as Gray Mountain will undoubtedly be even higher than they are now.

Instrumentation

The decision to instrument the pond was made for the reasons of determining if the pond was performing as was expected. The instrumentation was developed in conjunction with the Engineering Experiment Station at the University of Arizona in Tucson. The instrumentation consisted of several types of sensors for measurement of: pond temperature, solar insolation, wind speed, and ambient temperature.

The Data Acquisition System (DAS) was installed using a PDL-24 microcomputer as its core. The microcomputer and sensor terminal box (with signal conditioning cards for each channel) were set up in the Equipment Maintenance Building near the solar pond's control system. Cable was run along the fence to a terminal box located at the edge of the pond. AD 590 thermistors, in glass tubes filled with encapsulant, were connected to the terminal strip by special water-proof, high-temperature wire. These were mounted along a rope at 9-inch intervals and put in place by means of a guy rope and pully system.

A LI-COR pyranometer, ambient temperature probe and an anemometer were installed at the terminal box near the pond. Table 2 shows the sensors used and the channel allocation.

The microcomputer was connected to an auto-answer MODEM connected to a telephone line installed at the site. This permited the microcomputer to be down-loaded by a computer located at University of Arizona (UA) in Tucson. Each morning, the previous 24 hours of data stored on site was sent to the central site at the UA. Collected on disc, the daily data files were then sent to a UA mainframe computer (VAX) where monthly files were created.

The period of instrumentation was limited to a six month period for instrumentation and testing. This limitation was due to project deadline requirements and cost constraints. The period began in May of 1983 but due to the requirements for acquisition and installation of the sensors, the actual

TABLE 2. SOLAR POND SENSOR LIST

| Channel | Sensor Type and Serial # | Parameter Measured | Designation | Units |
|---|---|---|---|---|
| A | LiCor Pyranometer | Horizontal Solar Radiation | IH | $BTU/ft^2/hr.$ |
| B | Anemometer | Wind Speed | W | MPH |
| C | AD-590 Thermistor | Ambient Temperature | TO | $^oF$ |
| D | - | - | - | - |
| E | AD 590 | Pond Top Temperature | TP | $^oF$ |
| F | AD 590 | Pond Temperature | TP | $^oF$ |
| G | AD 590 | Pond Temperature | TP | $^oF$ |
| H | AD 590 | Pond Temperature | TP | $^oF$ |
| I | - | - | - | - |
| J | AD 590 | Pond Temperature | TP | $^oF$ |
| K | AD 590 | Pond Temperature | TP | $^oF$ |
| L | AD 590 | Pond Temperature | TP | $^oF$ |
| M | AD 590 | Pond Temperature | TP | $^oF$ |
| N | AD 590 | Pond Bottom Temperature | TP | $^oF$ |

monitoring did not occur until July 1983. which was over one year after the pond was operational. Therefore, the period monitored was actually July, August and September of 1983. It was discovered that prior to the first trip to the pond site by the U of A monitoring team that nearly half of the pond's water volume had evaporated away seriously disrupting the non-convecting and lower convecting zone thicknesses. Because of this evaporation and a failure to maintain proper water level of the pond which apparently took place during April and May of 1983, the pond's performance was seriously affected. (Note: During the months of April and May there was no maintenance generally present at the pond site and there was no refilling of the pond during this time).

Gray Mountain maintenance crews did refill the pond after it was discovered that over 30 inches of water had evaporated. However, the previous gradient profile was not reestablished. This was confirmed by measurements subsequently taken by the U of A monitoring team.

Difficulty was also experienced in retrieving the data from the remote site due to the computer at U of A in Tucson which was not operating from the 18th to the 28th of August. This occurrence prevented the acquistion of meaningful data for the project during the affected period of time.

The collected data has provided significant results. With a range of ambient temperatures of $63.4^{o}$ to $102.2^{o}F$ the bottom showed a range of $117.4^{o}$ to $130.8^{o}F$. The average nightime drop in bottom temperature was $6.8^{o}F$. A significant drop in bottom temperature took place on July 7 at the start of the monsoons. It should be emphasized that these measurements were taken after the gradient was disrupted by the evaporation.

Figure 9 shows the solar pond's temperature profile for July 5, 1983, for the period of maximum and minimum bottom temperatures. This profile is compared to that of a properly established pond. It must be noted that measurements made by Dr. Charles O'Bannon of ASU and Dr. Frank Mancini of ASEC during September 1982 did establish that a proper non-convecting zone and lower convecting zone were in place as reguired. It was at this time (September 1982) that temperatures in the pond's bottom were approximately $130^{o}F$ and this was measured at several different locations in the bottom of the pond.

Unfortunately, when the 30 inches or more of water evaporated form the pond during the spring of 1983 the gradient profile was disrupted. When the pond was refilled the gradient was significantly different form the original.

The temperature profile provides a very good indication of the salt gradient. It is easy to see why the pond is showing a poor performance. Rather than about 4 feet of "transparent insulation" (NCL), the pond has a NCL of only about 10 inches. The effect of this is the reduction of the bottom temperature from expected $180^{o}$ to $210^{o}F$ to about $130^{o}$ to $135^{o}$ F.

Variations in Pond Temperature

Figure 10 shows the variation in the pond temperature over the month of July, 1983 period. The information which is shown indicates several things:

First, the temperature will track the ambient temperature with an almost constant differential. The differential in this case is approximately 40 to 45 degrees.

Second, the extremes of low temperature are integrated out by the thermal mass of the pond.

Third, the depth will undoubtedly have a lot to do with the reradiation during the evening hours. Therefore, it would seem logical to assume that the larger the latitude, the larger the depth should be to promote a desirable performance range.

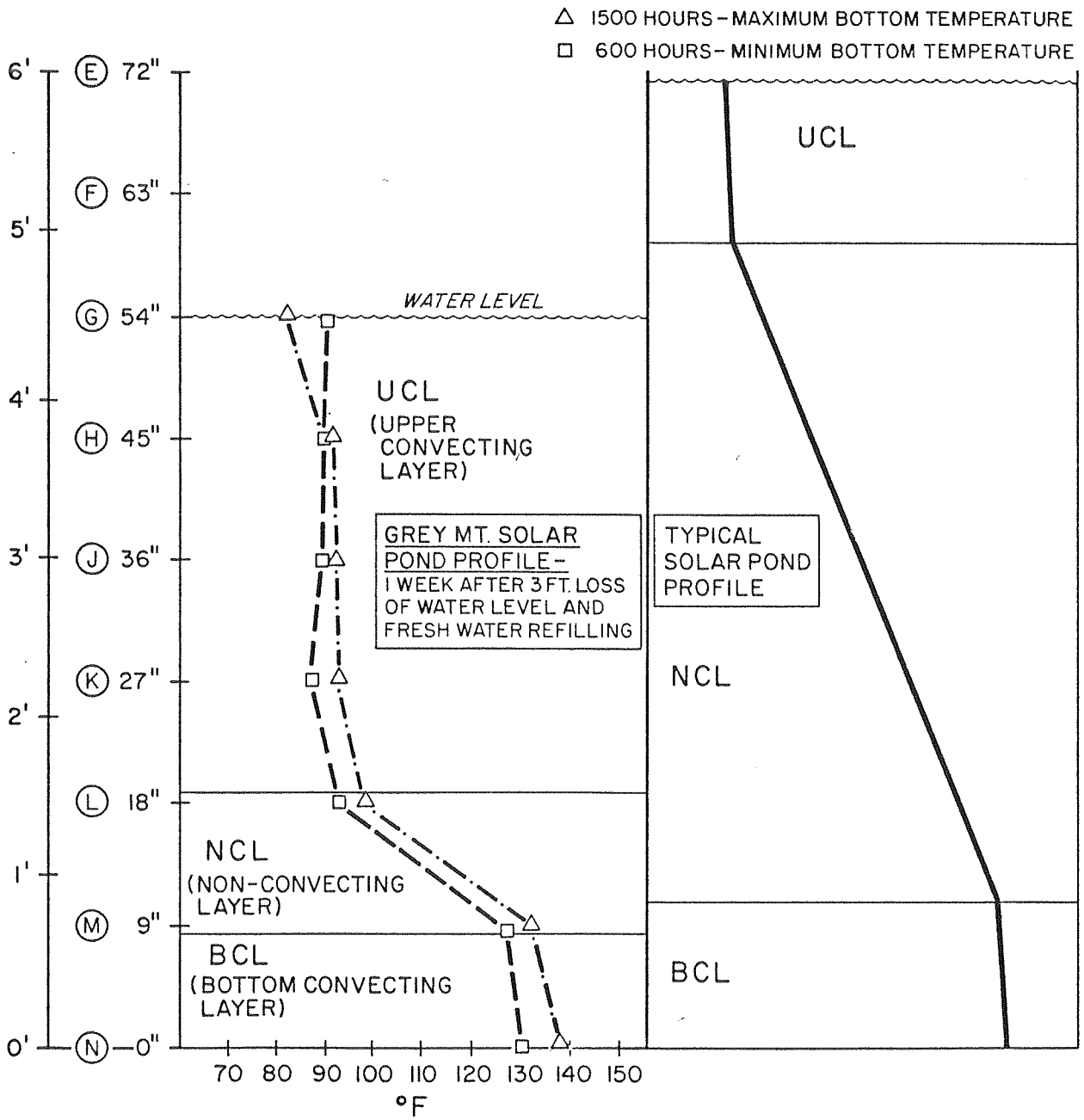


FIGURE 9. SOLAR POND TEMPERATURE PROFILE FOR JULY 5, 1983

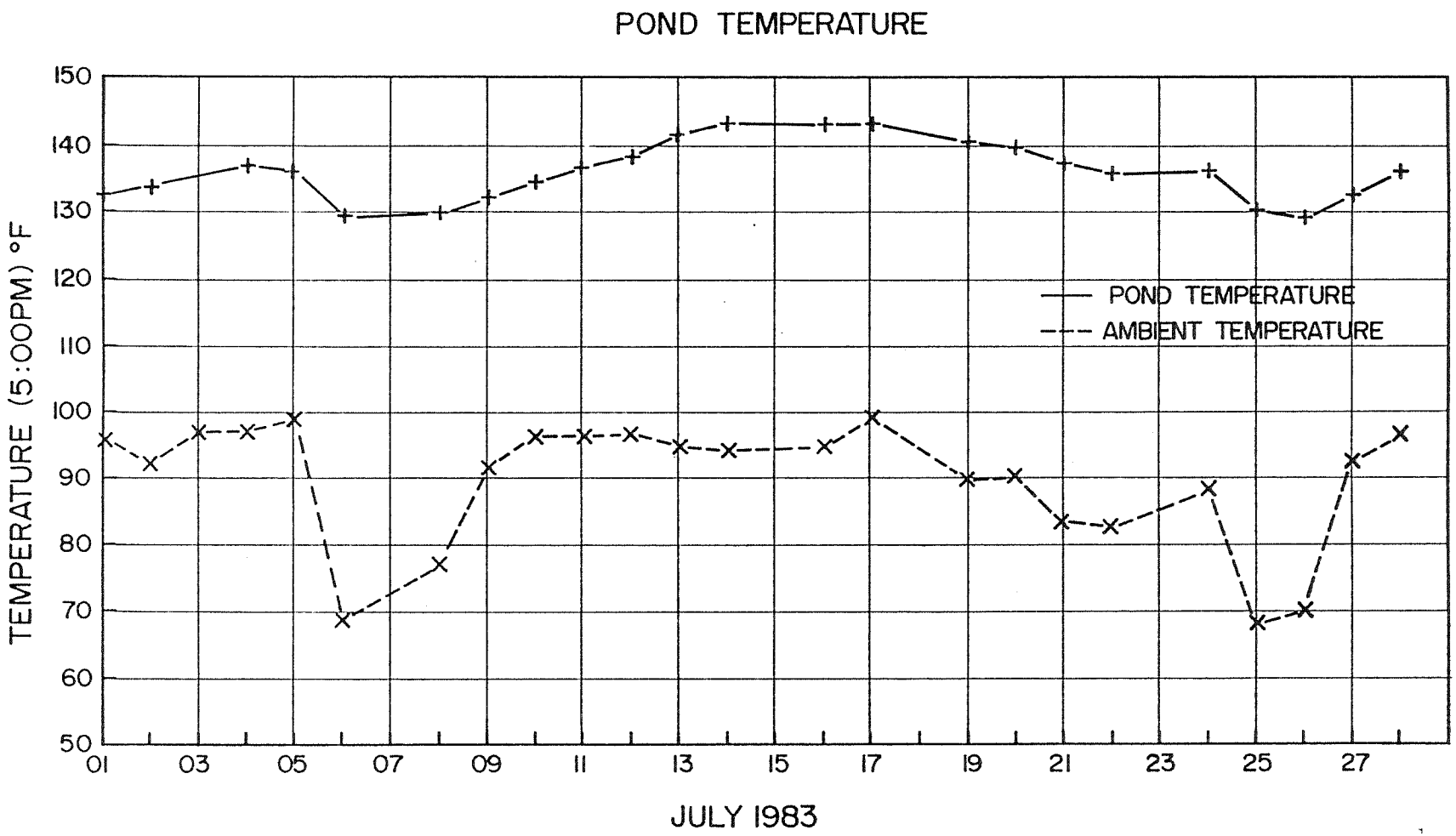


FIGURE 10. VARIATIONS IN POND TEMPERATURE

Fourth, the pond would probably benefit by some measures which would help reduce night reradiation. This is an area which could use some additional research.

Fifth, the pond temperature measured in September was near the end of the month 118$^{O}$F when the daily high (ambient) is 56$^{O}$F. Therefore, the potential for heating was good.

## CONCLUSIONS

The salt gradient pond concept was considered as an alternate energy source for a remote area such as Gray Mountain. The economics rely heavily on the size of the project and the initial cost per square foot. It is anticipated that the solar pond concept may become a viable alternative source of energy if the installation cost can be brought down to approximately $2.00 per square foot. It is interesting to note that the costs which have been experienced at other ponds have ranged from $3.50 per square foot to as much as $8.00 dollars per square foot. With these types of costs and the efficiencies experienced to date, the cost of energy produced by a solar pond is at least as expensive as energy produced by other technologies. The target for practical feasibility should be the lowest installation costs and the highest possible efficiency. The production of energy from such a facility is also dependent upon the quality of routine maintenance and this will incur additional costs to the project.

The salt gradient pond constructed at Gray Mountain demonstrated that:

- In principal the salt pond worked.
- The required maintenance of the pond was more than the Gray Mountain facility could provide.
- Because of the difficulties in providing sufficient maintenance a loss of water through evaporation can seriously disrupt the gradient within the pond.
- Once the gradient was disrupted through the evaporative water loss it did not return to its former state.
- A salt pond is never in a stable equilibrium state. Given the perturbation of significant size it will move out of its quasi-equilibrium to another state. Because of this factor a pond's condition must be monitored on at least a weekly basis. That is, a temperature profile should be checked to provide an indication of the gradient profile, and the water level must be monitored.

With these points in mind, salt ponds cannot be recommended as viable thermal energy alternatives under any but very favorable conditions as listed below:

- Plentiful and cheap water and salt supply.
- Low cost labor available for maintenance.
- Important need for low-grade thermal energy ($T < 100^{O}C$)
- Lack of suitable alternative heating energy supplies or lack of cost-effective alternative heating energy supplies.

If any of the above conditions are not present then it is our recommendation that salt-gradient pond technology not be considered as a viable low temperature thermal energy source.

## RECOMMENDATIONS

Additional research should concentrate on the practical production of low cost energy from a facility of this type. The ability to generate sizeable amounts of thermal or electrical energy could hinge on the development of a facility of this type with the minimization of costs by taking advantage of several factors.

These could be:

1. If the pond could be formed by constructing an impoundment instead of excavation the construction costs could be significantly lowered.

2. The cost of the salt can be a large factor in the development of a large project. This cost could be lowered if the project has some access to a source of either waste product salts or a saline water environment. Even if ocean water is available, it must be concentrated by a ratio of about 10 to one.

3. The source of the water must obviously be large and should be a very low cost if any since the requirement for water is ongoing.

It is recommended that the solar pond technology be considered in situations which provide at least #'s 2 and 3 of the above items.

The question remains, however, whether the agency which contracts to build such a facility wants to make the commitment to build, maintain and operate their own small utility. If the agency can justify the involvement in building their own facility,and has available salt source and cheap water, and can provide the requisite maintenance for the pond's water level and gradient then the solar pond certainly may supply a method which is environmentally non-damaging reuseable source.

The development of a project of this type requires the decision to either proceed to manage the energy which is developed very carefully or to use an alternate scenario which includes the design process. The alternate approach is to overdesign the project to account for the vagaries of climate and the variability of usage. The project design which was used, in this case, does not take these variations into account. The probable changes which would have been made would have been:

A. The pond would have been larger. The area would have more like one-half acre. This would have provided the additional energy input necessary to allow for periods of low insolation. However, this would be more costly.

B. The pond would have had a greater depth. The depth of the storage zone would have been more on the order of two meters. This change would have made the fluctuations due to usage losses and conductive losses much smaller. The trade-off for this type of change would be the loss of the rapid recovery potential due to the larger mass to heat. This larger storage would then serve to integrate the additions and consumptions of energy over a longer period of time.

C. Additionally, the maintenance of the pond would have to be budgeted for and the personnel responsible for the maintenance would have to perform routine maintenance functions designed to address the following items: Evaporation, Salt-Diffusion, Sedimentation, Water Quality, and Organic Intrusion into the Pond.

The above subjects have been noted to be important in the operation of the salt pond. For instance, the evaporation from the surface of the pond can reach approximately 50 inches per year. This amounts to a quantity of water approaching 253,000 gallons per year from the little one-fifth acre pond. This evaporation rate is approximately 692 gallons per day. The loss of this amount of water can in some places be intolerable.

Additionally, the monitoring of the diffusion of the salt from the storage layer is difficult and yet it is one of the most important parameters which can be monitored. The development of a low-cost and simple method for monitoring the diffusivity of the salt in the dynamic hot brine environment of a salt pond is a challenging subject for further study.

The intrusion of sedimentation from aeolian sources as well as the water supply is another factor which needs to be considered. The presence of dust and other materials in the bottom of the pond does not seem to affect the performance as long as it is on the bottom. However, right after a dust storm, the pond is cloudy with suspended sediment. This sediment can and does seem to affect the performance. The need to be aware of its potential for affecting the transmissivity of the water layers is important. The total removal of all dust seems illogical especially in larger ponds. Therefore, it seems important to allow for situations which might arise which would place additional sediment into the pond.

In the Gray Mountain area, the Russian Thistle (tumbleweed) is a predominant form of vegetation. This type of plant matter has on a number of occasions been transported into the pond by the force of the wind. The removal of these materials from the pond has been accomplished by means of rakes etc. The intrusion of this type of material has been greatly reduced by the addition of the chain link fence which now surrounds the pond. This is another maintenance factor which can add to the cost of solar pond.

## BIBLIOGRAPHY


1. "Study of the Feasibility of a Solar Salt Pond Generating Facility in the State of California, USA," Volume One, Ormat Turbines Ltd.

2. "Study of the Feasibility of a Solar Salt Pond Generating Facility in the State of California, USA," Volume Two, Ormat Turbines Ltd.

3. F. Zangrando, "A Simple Method to Establish Salt Gradient Solar Ponds", Solar Energy, V25, N5, p467, 1980.

4. Ed Lin, "A Review of the Salt Gradient Solar Pond Technology," Jet Propulsion Lab, Pasadena, California, March 1982.

5. Y. C. Wu, et al., "Solar Pond Power Plant Feasibility Study for Davis, California".

6. Ed Lin, "Regional Applicability and Potential of Salt Gradient Solar Ponds in the US", Volume One, Executive Summary, Jet Propulsion Lab., Pasadena, California, March 1982.

7. Ed Lin, R. L. French, M. J. Singer, "Regional Applicability and Potential of Salt Gradient Solar Ponds in the US," Volume Two, Detailed Report, Jet Propulsion Lab, Pasadena, California, March 1982.

8. Michael Edesess, "A Simple Design Tool for Sizing Solar Ponds."

9. Private correspondence to Dr. Frank Mancini from Dr. C. E. O'Bannon. RE: Salt Pond at Gray Mountain, C. E. O'Bannon.

10. C. E. O'Bannon and F. P. Mancini, "A Thermal Model to Calculate the Short Term and Long Term Heating Characteristics of the Heat Exchanger Area of the Gray Mountain Solar Pond".

11. C. E. O'Bannon and F. P. Mancini, "Solar Pond Thermal Analysis and Design for Gray Mountain ADOT Maintenance Campsite."

12. Ehud Finkelstein, "On Solar Ponds: Critique, Physical Fundamentals and Engineering Aspects."

13. James L. Giulianelli, Abdulmagid M. Naghmush, "A Technology for Determining Solar Energy Profiles in Solar Ponds."

14. Z. Panahi, J. C. Batty, and J. P. Riley, "Numerical Simulation of the Performance of a Salt-Gr adient Solar Pond," JSEE, V105, N4, p369-374, 1983.

15. Steven L. Sargent, "Solar Ponds: A Time for Vision."

16. L. J. Wittenberg and M. J. Harris, "Construction and Startup Performance of the Miamisburg Salt-Gradient Solar Pond," JSEE, V103, N1, p11-16, 1981

17. C. F. Kooi, "The Steady State Salt Gradient Solar Pond," Solar Energy, V23, N1, p37-45, 1979.

18. A. Akbarzadeh, R. W. G. MacDonald, "Introduction of a Passive Method for Salt Replenishment in the Operation Ponds", Solar Energy, V29, N1, p71-76, 1982.

19. "Flow System for Maintenance of Salt Concentration Gradient in Solar Ponds Test in Isothermal Pond", Solar Energy, V19, N6, p763-766, 1977.

20. F. Zangrando, "Performance of a Salt Gradient Stabilized Solar Pond," Technical Report, 14D00021, p17-20, 1977.

21. C. F. Kooi, "The Steady State Salt Gradient Solar Pond," Solar Energy, V29, N2, p177-178, 1982.

22. H. Tabor, "Solar Ponds," Solar Energy, V27, N3, p181+, 1981.

23. W. C. Dickinson and R. D. Neifert, "Parametric Performance and Cost Analysis of the Proposed Ohio Solar Process Heat Facility", Technical Report, 13C0005, 1975.

24. Donald E. Garrett, "Energy Production from Solar Ponds," Technical Report, 3D0024, 1977.