ARIZONA HIGHWAY DEPARTMENT
RESEARCH DIVISION

Report Number 6
HPR 1 - 11(153)

EXPERIMENTAL MOISTURE DETERMINATION FOR DEFINING SATURATED SURFACE DRY STATE OF HIGHWAY AGGREGATES

Prepared by:

ARIZONA HIGHWAY DEPARTMENT
Materials Division - Research Branch
1745 W. Madison
Phoenix, Arizona 85007

June 1974
Final Report

Prepared for:

U.S. Department of Transportation
Federal Highway Administration
Arizona Division
3500 N. Central
Phoenix, Arizona 85012

CHNICAL REPORT STANDARD TITLE PAGE

1. Report No.	2. Government Accession No.	3. Recipient's Catalog No.
Report No. 6		

4. Title and Subtitle	5. Report Date
Experimental Moisture Determination for Defining Saturated Surface Dry State of Highway Aggregates	6. Performing Organization Code
7. Author(s) James S. Dana Rowan J. Peters	8. Performing Organization Report No.
9. Performing Organization Name and Address Materials Division (Research) 1745 West Madison Street Phoenix, Arizona 85007	10. Work Unit No. 11. Contract or Grant No. 13. Type of Report and Period Covered
12. Sponsoring Agency Name and Address Arizona Highway Department 206 South 17th Avenue Phoenix, Arizona 85007	14. Sponsoring Agency Code

15. Supplementary Notes

Prepared by the Arizona Highway Department in cooperation with the Federal Highway Administration, Department of Transportation. The opinions & conclusions are those of the authors and not necessarily those of the Federal Highway Administration.

16. Abstract

The objective of the research project was to investigate various moisture testing techniques in an attempt to improve present methods of specific gravity testing for fine aggregate. A testing technique to reduce the wide range of specific gravity test results and the time necessary to test for saturated surface dry condition is needed. A direct test method to measure surface moisture conditions would be desirable where as an indirect test method is presently in use.

A prototype test apparatus was developed to directly measure surface moisture condition of mineral aggregate using basic principles of thermodynamics. The new test apparatus enables the laboratory technician to determine saturated surface dry state in a few minutes with satisfactory reliability.

A reasonable cost was incurred for the construction of the prototype test apparatus (Under $500). Range of test results from differential drying of various aggregate sizes during preliminary testing was eliminated with the test apparatus. The test apparatus responded equally well to a variety of materials and demonstrated surface moisture changes accurately.

Initial research tests using the prototype apparatus produced a moisture percentage range of ±1 for each test sample. The range of test results for the standard cone test (AASHO T84-70) has previously shown to deviate ±2.3% or ±.06 for a specific gravity of (2.60). Further evaluation is necessary to verify the range of test results for the new test equipment. A wide variety of material classifications should be tested with the prototype to verify the advantages of the apparatus.

17. Key Words	18. Distribution Statement
saturated surface dry, specific gravity, prototype, surface moisture, fine aggregate, temperature differential, & differential thermal analysis.	

19. Security Classif. (of this report)	20. Security Classif. (of this page)	21. No. of Pages	22. Price

Form DOT F 1700.7 (8-69)

EXPERIMENTAL MOISTURE DETERMINATION FOR DEFINING SATURATED SURFACE DRY STATE OF HIGHWAY AGGREGATES
HPR 1-11 (153)

FINAL REPORT

Prepared by: James S. Dana
Materials Research Engineer (Acting)

Reviewed by: Rowan J. Peters
Assistant Engineer of Materials (Research)

Grant J. Allen
Engineer of Materials

Gene Morris
Engineer of Research

The contents of this report reflect the views of the authors who are responsible for the facts and the accuracy of the data presented herein. The contents do not necessarily reflect the official views or policies of the Arizona Highway Department or the Federal Highway Administration. This report does not constitute a standard, specification or regulation.

TABLE OF CONTENTS

	PAGE
Abstract	1
Introduction	3
Literature Survey	4
Requirements For The Surface Moisture Measurement Apparatus	5
Preliminary Investigations Into Theory Of Soil Moisture Evaporation	6
Differential Thermal Analysis Equipment	6
Forced Air Drying Technique	8
The Development of The Saturated Surface Dry Testing Apparatus	10
Refinements of Test Apparatus - General Curve Developed From The Test Apparatus	15
Interpretation of The Regions of The Saturated Surface Dry General Curve	16
Theoretical Explanation of The General Curve By Thermodynamics	18
Comparison of Test Apparatus to Cone Test	20
Conclusions	23
Recommendations	24
Acknowledgements	26
References	27

TABLES

TABLE		PAGE
A	Sample Number 39118	28
B	Sample Number 3380	29
C	Sample Number 2122	30
D	Laboratory Cone Test Results	31
E	Estimate Cost for Test Equipment of the Prototype	32

FIGURES

FIGURE		PAGE
A	Example of DTA Results	33
B	Schematic System Diagram of DTA Equipment	34
C	Initial Test Apparatus for SSD Project	35
D	Initial Differential Temperature Test For Prototype Development	36
E	Bottom View of SSD Prototype	37
F	Top View of SSD Prototype	38
G	System Diagram for SSD Prototype Testing Apparatus	40
H	Test Results from SSD Prototype Equipment	41
I	SSD General Curve From Test Apparatus Prototype	42
J	Moisture % Curve For Saturated to Dry Condition	43
K	Rate of Moisture % Change For Saturated to Dry Condition	44
L	Classification of Test Materials	45
M	Solenoid Pulsing Circuit	46
N	SSD Indicator Circuit	47

IMPLEMENTATION STATEMENT

A prototype test apparatus was developed for determining the saturated surface dry state of fine aggregate. This development appears to provide a decided advantage over existing testing methods and equipment.

A second phase will be conducted to provide a complete analysis with varying material types and physical differences. An attempt will be made to expand potential uses of this testing technique to include coarse aggregate.

ABSTRACT

The objective of the research project was to investigate various moisture testing techniques in an attempt to improve present methods of specific gravity testing for fine aggregate. A testing technique to reduce the wide range of specific gravity test results and the time necessary to test for saturated surface dry condition is needed. A direct test method to measure surface moisture conditions would be desirable where as an indirect test method is presently in use.

A prototype test apparatus was developed to directly measure surface moisture condition of mineral aggregate using basic principles of thermodynamics. The new test apparatus enables the laboratory technician to determine saturated surface dry state in a few minutes with satisfactory reliability.

A reasonable cost was incurred for the construction of the prototype test apparatus. (Under $500.00). Range of test results from differential drying of various aggregate sizes during preliminary testing was eliminated with the test apparatus. The test apparatus responded equally well to a variety of materials and demonstrated surface moisture changes accurately.

To minimize testing errors from operator judgement with the test method, a fully automatic electronic control system was designed for use with the test equipment. A digital-analog automation system was developed to detect

the saturated surface dry condition. When this state is detected, the system discontinues the test and alerts the technician that the test is finished.

Initial research tests using the prototype apparatus produced a moisture percentage range of ±1 for each test sample. The range of test results for the standard cone test (AASHO T84-70) has previously shown to deviate ±2.3% or ±.06 for a specific gravity of (2.60). Further evaluation is necessary to verify the range of test results for the new test equipment. A wide variety of material classifications should be tested with the prototype to verify the advantages of the apparatus.

Introduction

The specific goals of the research study were to investigate various moisture testing techniques to improve present methods of specific gravity determination of soils and aggregates. The need for a test method which would reduce the wide range of specific gravity results is needed. Ideally a test method to measure surface moisture conditions directly would be desirable instead of the indirect test method presently in use. The objective of the research study was to develop a method which would respond more reliably to the saturated surface dry condition of the aggregate material. Finally, a testing apparatus required development which could be used for routine laboratory testing of highway aggregate material.

The following criteria was established to govern the study and equipment development.

1. A reasonable cost for the testing apparatus.

2. A technique which would reduce the required testing time.

3. Test equipment sufficiently rugged, yet portable, designed for operation in remote laboratory locations where ideal test conditions are not available.

For the selection of a satisfactory moisture measurement method, the following factors were considered as guidelines:

1. A test method that would cause the water present on the surface of the material under test to enter into the determination.

2. A minimized interference from a variety of factors such as density and temperature variation resulting in erroneous moisture determinations.

3. A measurement system that would respond equally well to the aggregate surface conditions with a large variety of materials.

4. A testing technique with ease of operation and sample preparation, performed in a minimum period of time.

5. A test method which would identify the saturated surface dry state with greater reliability and dependability.

Literature Survey

To initiate the project development, a literature study was conducted to avoid duplication of effort and to gain insight into methods of moisture testing (Reference 1 to 5). Many methods in use today for moisture measurement

use unique applications of testing principles for specific materials. Few tests are universally applicable for all types of material encountered in highway construction. Most test methods had major disadvantages and experiments in laboratories demonstrated that they would be unsatisfactory for a wide variety of materials.

Requirements for the Surface Moisture Measurement Apparatus

Following the literature survey, it was apparent that an entirely new concept of testing soils for surface moisture condition using the principles of thermodynamics was desirable for valid test results. For instance, to test the outer surface moisture condition of an aggregate, a technique which directly responds to moisture content and moisture evaporation in a test chamber was desirable. Also, since the surface dry state can be accomplished by the flow of warm air over a saturated material, the test chamber included a dryer. A method of continually blending the various large and small size aggregates of the soil material while drying was necessary for even moisture distribution. This was accomplished by designing the test chamber incorporating a rotating mixing drum. These essential requirements of the testing apparatus were developed in stages as needed.

Preliminary Investigations into Theory of Soil Moisture Evaporation

Differential Thermal Analysis Equipment - The differential thermal analysis (DTA) equipment was used to research the mechanisms of soil moisture evaporation. Many questions concerning the bonding of water to soil particles, various stages of drying, and absorption to inner pores were investigated. A definition of the saturated surface dry condition was sought using the differential thermal analysis equipment. Various materials and particle sizes were tested to study their behavior for further insight into differential drying of aggregates.

In the DTA equipment the thermal reactions resulting from physical phase transitions are measured by two thermocouples. One thermocouple is placed in the sample, the other in a reference material. The temperature difference of the thermocouples, which are sensitive to small temperature changes of the sample, are measured as the sample is heated at a linear rate. The temperature of the sample and the differential temperature of the reference material are recorded as a function of time on graph paper. An example of a DTA graph of results is shown in Figure A.

Two curves are shown on the graph, the differential sample temperature and the actual sample temperature. The actual sample temperature curve shows

a linear increasing temperature line with time. The slight dip in the curve demonstrates a phase change in the sample lagging the differential curve. However, the differential temperature curve is more sensitive to changes of state of the sample and responds more rapidly.

The DTA characterizes the substance being tested by the differential sample temperature curve. Each sample develops a distinct curve whose position and shape identifies phase changes of the substance. The area of the peak or dip in the curve is somewhat proportional to the heat of transition and in some cases a quantitative determination of the heat of reaction. For purposes of this study, the DTA was used for studying moisture evaporation properties of aggregates normally tested for saturated surface dry in the laboratory.

The DTA apparatus is shown schematically in Figure B. The equipment is composed of the following items: Furnance, sample holder, millivolt d.c. amplifier, furnace temperature control and recorder. These components are integrated into a system which is used to measure and record the differential temperature as a function of temperature or time.

Experimentation was begun with various materials following establishment of a standardized preparation procedure. The samples were soaked in water overnight to saturate the inner pores of the aggregate. Immediately preceding

DTA testing, the excess water was removed. A small portion was placed in the sample holder and placed in the DTA test apparatus.

Surprising results were obtained from the first samples. The DTA test equipment generated identical type curves for all samples. Tests were made by weighing the samples when reaching the evaporation points indicated on the curve to see whether they were a function of the SSD surface condition.

Although the DTA generally responded to the loss of moisture of test samples, it apparently lacks the sensitivity to detect the change of moisture content at SSD. Since the state of SSD occurs with a very small change in moisture content relative to the entire sample weight, the DTA was insensitive to this change of state occuring on the surface of the aggregate. It was concluded that the DTA responds to the total moisture content of the test sample rather than surface moisture conditions. Therefore, the application of the DTA for studying bonding, absorption, and drying properties of aggregate was not recommended.

Forced Air Drying Technique - The development of a testing apparatus began with experimentation to study moisture evaporation. A fine screen was placed between two vertical plastic tubes. Moist soil material was placed on top of the screen and warm air from the hot air blower was forced by an inlet

temperature sensor and through the tubing. In this manner moisture was slowly evaporated from the saturated soil material which lowered the temperature of the air passing by the exit temperature sensor. The changes in air temperature from inlet to outlet sensors due to moisture evaporation were measured using a millivoltmeter. A drawing of the apparatus is shown by diagram (Figure C).

Since the drying process using warm air flow is not rapid, the differential voltage output of the temperature sensors could be recorded and plotted versus time. Readings were taken at regular intervals to study the behavior of the moist material when drying. From this data, a graph displaying differential temperature readings was plotted as shown in Figure D.

Following a series of experiments, the initial test equipment demonstrated that the shape of the curve is usually similar for various tests. However, no definite sharp break point for saturated surface dry state was demonstrated. An examination of the material under test on the fine screen was made to study why a similar curve resulted during each test. It was found that the material under test was not drying evenly.

The uneven drying of the saturated soil material was caused by several factors related to the test apparatus. When the moist soil material was placed on the wire screen for drying, the particles were spread unevenly, allowing

air to flow through open areas easier than areas with soil clusters causing uneven drying. When a great deal of effort was made to spread the material evenly over the screen mesh, the larger aggregate dried noticeably faster than the smaller aggregate indicating a need for mixing or blending of the material during the test.

From these initial experiments it was concluded that:

1. The test results demonstrated promising possibilities when plotted versus time.

2. All the problems were encountered with uneven drying of saturated aggregate, the basic test method is well suited for testing surface moisture using principles of thermodynamics.

3. Development of an entirely new method of testing for saturated surface dry state (SSD) of highway aggregates which would accurately measure the state of surface moisture of aggregate was possible.

The Development of The Saturated Surface Dry Testing Apparatus

With these conclusions, a prototype testing apparatus incorporating forced air drying and differential temperature measurement techniques was

developed. The prototype test apparatus incorporated a method of mixing and blending the moist material while the drying process is proceeding, causing the various sizes of aggregate to achieve the saturated surface dry conditions at the same point in time.

A test chamber using a six-inch (15.24 cm) diameter plexiglass pipe was fabricated with blades of plexiglass attached on the inside perpendicular to the cylinder to blend the material during rotation. The plexiglass transparent tubing allowed the full view of the test chamber. In this manner the blending and the falling conditions of the material could be studied without difficulty.

Blade configuration design was compared for best results. The types of configurations tested were angled blades or blades with pitch, blades lifted off the cylinder with posts and straight blades flush with the cylinder. The simple straight blades attached to the cylinder were found to be satisfactory and equal in performance to other designs.

It was found necessary to employ a conical shaped exit chamber in front of the exit tube for two reasons. The air flow through the test chamber was improved with a gradual taper instead of a restricted tube exit, and the tapered end piece helped to keep the material from leaving the rotating test chamber as it fell through the air stream.

Due to the rapid velocity of the warm air stream, another problem arose. The fine particles of material which fell in the tumbler were carried by the warm air stream out of the test chamber through the exit tube. Removing a portion of the fines from the sample in this manner resulted in erroneous test results. If the warm air velocity was reduced to eliminate the loss of fines, the temperature sensors readings became erratic. Consequently, a fine screen was placed across the exit channel of the test chamber to keep the fines from escaping while still measuring temperature changes accurately.

With these problems under control, the tumbling action of the plastic test chamber was investigated. Various rotational velocities were tested for the proper mixing action with dry materials. At higher rotational velocities, material adhesion to the sides of the tumbler was severe due to centrifugal force. At lower velocities of rotation, the material fell prematurely and did not reach the warm air stream to be dried. After experimentation with various materials and rotational velocities, an optimum value was determined. A rotational speed of 47 revolutions per minute was found to be the most satisfactory. For economy and availability, a general purpose split-phase, 1/20 horse power, (37.3 watts) A.C. electric motor was permanently mounted to the frame of the prototype. A belt pulley system for speed reduction was developed to provide a high starting torque with a proper rotational velocity for the

tumbler. An illustration of the rotational equipment is given in Figure E.

A difficulty arose regarding adhesion of moist soils to the sides of the tumbler. Due to the centrifugal force of the rotating tumbler, the material adhered and coated the sides of the tumbler. Various coatings were tried to reduce this action, but the abrasion of the aggregate soon made them ineffective. The best solution was found to be vibration from solenoid hammers. An electrical circuit was designed to actuate the solenoids as shown in Figure M.

To eliminate the problem of operator judgement with the SSD break point determination, the testing apparatus was automated using a newly designed electronic SSD indicator system. A digital-analog electronic circuit was developed to detect the slope change at SSD. When the test is completed, the electronic controller turns off the equipment and alerts the test operator. A complete schematical diagram of the circuitry is given in Figure N. Since the automation circuit was developed at the end of the research project, final evaluation is not complete, however, the automatic system should reduce the variability of test results to a minimum.

When tests were made with the new test equipment using passing No. 4 sieve material, the larger particles were found to interfere and change the blending and drying behavior of the smaller particles. Therefore, to prevent differential

drying of the material, the aggregate was separated on a No. 8 sieve so that the larger aggregates did not interfere. The material larger than the No. 8 sieve can be included as part of the coarse aggregate specific gravity determination when desired. The results of the procedure were a more uniform drying of the aggregate and improved accuracy.

The completed tumbler test chamber was placed on four plastic castor wheels mounted to the frame. One of the castor wheels was turned a slight angle to the tumbler chamber to cause it to move towards the inlet end. A fifth caster wheels mounted with its axis vertical was placed at the inlet end of the tumbler at the bottom to hold it in position.

The original plastic rotating chamber was made to a one-foot (30.48 cm) length which seemed to be a satisfactory length in the beginning. However, some problems arose with an experimental test chamber of this length. At the exit end of the rotating tumbler a cooler environment developed compared to the inlet. The chamber length caused a rapid drying of material at the inlet end of the tumbler and a condensation of water vapor at the exit end. To alleviate the differential drying conditions of the tumbler, the chamber length was reduced to one half size or six inches (15.24 cm) and aluminum was used in lieu of plastic. A diagram and photographs of the final prototype is given in Figure F.

With the smaller size tumbler, the sample size had to be reduced. However, the quantity of material (approximately 1000 grams) remained sufficient to obtain valid test results when compared to the cone test method. The chamber was found adequate to satisfactory for uniform drying of material and response to the condition of surface dry.

Refinements of the Test Apparatus

Many refinements have been made to the SSD test apparatus since the initial developments, and other modifications may be necessary as the investigations continue.

Thermocouples for temperature monitoring have been mounted in the inlet and outlet tubes of theprototype dryer equipment. A millivolt strip chart recorder was incorporated to display the voltage generated due to the difference in temperature of the thermocouples. The break point in the (differential temperature) curve at saturated surface dry can be readily observed on the strip chart recorder by the test technician. Difficulties arose with the thermocouple system and therefore another type of temperature measurement sensor, the thermistor was selected to improve performance. The thermistor has a superior response to temperature change and a high input impedance. The large output voltages developed from these devices resulted in easier

amplification of temperature data. For an illustration of the completed test apparatus see Figure G.

General Curve Developed from the Test Apparatus

Several classifications of materials were employed in the preliminary testing program. The initial response of the test apparatus to these various materials was satisfactory, and a similar differential temperature curve was developed for each sample test period (See Figure H).

Interpretation of The Regions of The Saturated Surface Dry General Curve

An example of the general curve developed from the testing apparatus is shown in Figure I. The general curve is divided into four distinct regions resulting from conditions in the test chamber.

The first region of the general curve is characterized by a steep slope which rises rapidly from zero. This portion of the curve is reflecting the sudden change from initial excess moisture condition. Initially no temperature difference between inlet and outlet sensors exists. However, when the test is initiated the temperature difference suddenly changes to a maximum since the inlet air temperature is extremely high. The test chamber environment gradually

increases from room temperature.

The second region is indicating a leveling out of the curve to a nearly constant voltage value. By this time, the entire chamber has risen to high temperatures resulting in evaporation of large amounts of free available moisture, creating equilibrium conditions. A constant amount of water is being evaporated from the soil and a nearly constant temperature difference exists between the two temperature sensors during the second region. Throughout this phase, the humidity inside the chamber is maximum. However, the temperature difference from evaporation of moisture is uniformly high but not a maximum value.

The third region of the general curve is characterized by demonstrating the maximum differential temperature. Because the availability of excess free water is limited in this phase, the heat absorption by evaporation is maximum.

An explanation for the additional cooling effect stems from the fact that at this phase, there exists only a thin moisture layer surrounding each aggregate particle. Previously, each particle was covered by an excessive amount of water. This increased rate of evaporation provides additional cooling to the test chamber. The result of the process is a maximum cooling effect and maximum temperature differential between inlet and outlet sensors.

The fourth and final stage of the general curve is characterized by a sudden slope change from Region 3. The sudden break point in the general curve indicates the condition of saturated surface dry. At this point, the surface water on the aggregate particles has evaporated leaving no free available water to cause a maximum temperature differential. Since the internal water is trapped in the pores of the aggregates, more energy is required to vaporize this moisture. As a result of these conditions, the internal moisture trapped inside the aggregate cannot evaporate and absorb the heat as rapidly, causing an increase in temperature at the outlet. Consequently, the differential temperature and the voltage output changes rapidly at this point, indicating the state of saturated surface dry has been reached by the aggregate. This large change in the slope of the curve allows the electronic circuitry to readily detect the break point.

Theoretical Explanation of The General Curve by Thermodynamics

The shape of the general curve of the test apparatus can be explained using principles of the thermodynamics and soil physics. To understand the phenomenon of moisture evaporation of saturated aggregate, a study must first be made of weight loss of moisture. After an aggregate is saturated in water, placed on a fine screen, and a warm air stream forced over the aggregate, a

graph of the weight change with time is developed (Figure J). From the saturated condition, the soil loses moisture at a constant rate in time because the free water between particles is available. The loss continues at a constant rate until all the free water has evaporated.

The condition of saturated surface dry is reached when all free water has evaporated. At this point water is not free to escape so easily and must be drawn from the voids or pores inside the aggregate. Therefore, the curve changes to an exponential form demonstrating the extra energy required to release the interior moisture of the aggregate. As the aggregate becomes drier more energy is needed to evaporate the remaining moisture. However, the important fact is that the curve changes shape at the point of saturated surface dry.

For the purposes of this study, the derivative of this moisture curve is significant for the testing apparatus. The rate of moisture change graph is shown in Figure K. The curve is representative of the test chamber because the temperature differential from inlet to outlet is a function of the rate of moisture loss or evaporation.

The rate of moisture change graph is a straight line during the free

water evaporation period. As the graph indicates there is a horizontal line representing constant rate of water loss and a constant temperature difference. At the SSD point, the slope changes but the line is still straight. The negative slope represents a constant drop in rate of water loss since bound water inside the aggregate requires progressively more energy to evaporate. Finally, a constant zero rate of water loss is reached if the aggregate becomes completely dry.

The theoretical curves are ideal for the evaporation behavior of moisture bound to aggregate particles. However, the curve generated by the testing apparatus is surprisingly similar to the theoretical derivative curve for moisture loss. The only minor difference is in the extra cooling phase prior to the saturated surface dry condition. The new testing technique is directly measuring the saturated surface dry condition. The cone test, since relying on the angle of repose of the aggregate, is indicating many physical functions that are not completely a direct indication of the moisture state of the aggregate.

Comparison of Test Apparatus to Cone Test

Laboratory tests were conducted on selected samples for gradation,

plasticity index and sand equivalent, and these results are given in Figure L. The samples were also geologically classified. The samples were then tested by the cone test and with the new test apparatus.

Tables A through C list the saturated surface dry samples test results from the new test equipment. All the samples were tested to the point of saturated surface dry depicted by test apparatus and then compared to the cone test absorption results (Table D). Following this comparison the samples were weighed and oven dried to determine their moisture content (See Tables A to C). In some cases a good correlation did not develop between the two methods especially for very fine materials, and further research is needed to accurately determine the variability of test results from different laboratories. However, moisture variability within each set of test samples (Tables A to C) was found found to be approximately one percent of the mean.

Previous correlation testing done for the cone test in Arizona, and also by the AASHO Materials Reference Laboratory, had found that the results deviated from the mean by a considerable degree. The range of specific gravity results between various district laboratories was found to be (±.06). The range of test results from the AASHO Materials Reference Laboratory correlation testing program for the cone test was found to be (±.07).

A further comparison of the two methods of test revealed the following disadvantages for the cone test:

1. The cone test was difficult to perform and the range in test results between technicians was wide.

2. Constant working of material was necessary to obtain proper results which may in some cases require hours to complete.

3. The cone test must be done on a solid table to prevent vibration from altering test results.

4. Patience was necessary to tamp material properly in the cone and not strike the rim.

5. A drying rate difference was observed between large and small aggregate.

Some advantages of the new test apparatus were:

1. The test apparatus usually required approximately fifteen minutes to complete the test for saturated samples.

2. Constant mixing was unnecessary since the tumbling and blending action of the test apparatus was continuous throughout the test.

3. The test required very little operator judgement and was simple to perform.

4. Physical interference such as vibration did not affect the test.

Conclusions

Based on the findings of the research project, new concepts were developed for improvement of specific gravity testing. The following conclusions are made resulting from this study:

1. A promising test method and prototype test apparatus was developed for defining saturated surface dry state of highway aggregate.

2. The new test method directly responds to the surface moisture conditions of the aggregate independent of other variables.

3. A fine aggregate sample is easily prepared and tested within a period of approximately fifteen minutes.

4. A digital-analog indicator circuit was designed to automtically discontinue the test and alert the test operator when the condition of saturated surface dry is reached.

5. The range of test results from differential drying of various sizes of aggregate on preliminary test was eliminated with the new test apparatus which incorporates constant blending of material.

6. The new test apparatus responded equally well for a variety of materials on preliminary test samples.

7. Initial tests conducted with the prototype test apparatus produced a range of moisture variations at the saturated surface dry condition of approximately one percent.

Recommendations

The following are recommendations based on the results of the research study:

1. The saturated surface dry prototype test equipment should be used to test a wide variety of materials used in highway construction in an attempt to verify its usefulness and to establish a final calibration in relation to the standard cone test.

2. All other necessary modifications and improvements should be made as needed to finalize the development of the saturated surface dry test apparatus for implementation.

3. Investigate the possibility of applying the new testing apparatus for use with coarse aggregate.

Acknowldegements

The authors appreciate the advise and consultation of Ray D. Jackson, Ph. D., Research Physicist, U.S. Water Conservation Laboratory; John Elliott (Civil Engineering Technician II) for assistance in mechanical development of test equipment; and to the Materials Division's clerical staff for their effort in preparing this report.

References

1. Frank J. Welcher, "Standard Methods of Chemical Analysis", Volume IIIA, 6th Edition, p. 653, Van Nostrand Reinhold Company (1966).

2. L. D. Bauer, "Soil Physics", 4th Edition, John Wiley & Sons, Inc., (1972).

3. P. J. Geary, "Measurement of Moisture in Solids", Sira Institute, (1970).

4. S. V. Nerpin, "Physics of the Soil", Israel Program for Scientific Translations (1970).

5. E. R. Lemon, "The Potentialities for Decreasing Soil Moisture Evaporation Loss", Soil Science Society of American Proceedings, Volume 20: 120-125, (1956).

TABLE A

SAMPLE NO. 39118

TEST NO.	WET WT.	DRY WT.	CHANGE	% MOISTURE AT SSD
1	163.6	160.0	3.6	2.25%
2	161.5	158.8	2.7	1.70%
3	189.1	186.0	3.1	1.67%
4	138.2	136.1	2.1	1.54%
5	128.1	124.8	3.3	2.64%
6	117.4	114.4	3.0	2.62%
7	104.8	102.6	2.2	2.14%
8	96.2	93.8	2.4	2.56%
9	124.2	120.9	3.3	2.73%
10	132.3	129.0	3.3	2.56%
				2.24% Avg.
				(1.54 to 2.73) Range

TABLE B

SAMPLE NO. 3380

TEST NO.	WET WT.	DRY WT.	CHANGE	% MOISTURE AT SSD
1	124.0	121.0	3.0	2.48%
2	140.2	138.2	2.0	1.45%
3	133.8	132.0	1.8	1.36%
4	132.0	129.6	2.4	1.85%
5	147.6	145.2	2.4	1.65%
6	120.3	118.3	2.0	1.69%
7	124.1	121.4	2.7	2.22%
8	138.2	135.1	3.1	2.29%
9	131.3	128.3	3.0	2.34%
10	148.3	146.0	2.3	1.58%
11	131.0	128.9	2.1	1.63%
12	164.1	160.6	3.5	2.18%
				1.89% Avg.
				(1.36 to 2.48) Range

TABLE C

SAMPLE NO. 2122

TEST NO.	WET WT.	DRY WT.	CHANGE	PERCENTAGE MOISTURE @ SSD
1	131.2	126.3	4.9	3.88%
2	150.6	144.5	6.1	4.22%
3	160.0	153.3	6.7	4.37%
4	151.6	146.0	5.6	3.84%
				4.08% Avg.
			(3.84 to 4.37)	Range

TABLE D

LABORATORY CONE TEST RESULTS

SAMPLE NO.	ABSORPTION (%)	SPECIFIC GRAVITY SSD	SPECIFIC GRAVITY OD
39118	2.06	2.652	2.598
3380	0.67	2.648	2.653
2122	1.14	2.659	2.629

TABLE E

ESTIMATED COST FOR TEST EQUIPMENT OF THE PROTOTYPE

Millivolt Strip Chart Recorder & Paper	$150.00
Electric Motor 1/20 H.P.	15.00
Pulleys	4.00
Belts	2.00
Plastic	15.00
Aluminum	10.00
Castor	2.50
Selenoids & Mounting	25.00
Electronic Circuitry	150.00
	$373.50
Plus Miscellaneous Equipment	26.50
	$400.00

EXAMPLE OF DTA RESULTS

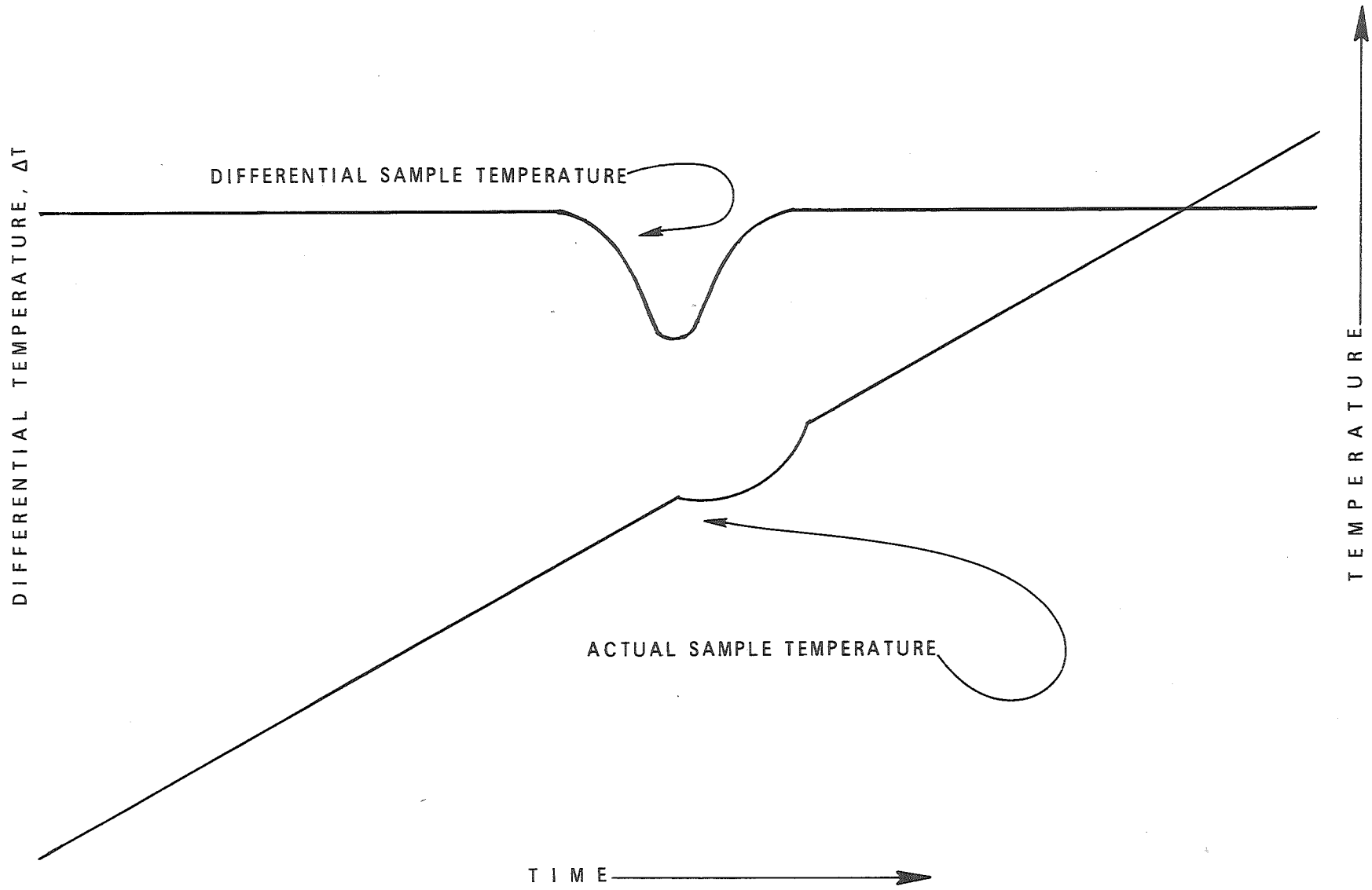

Figure A

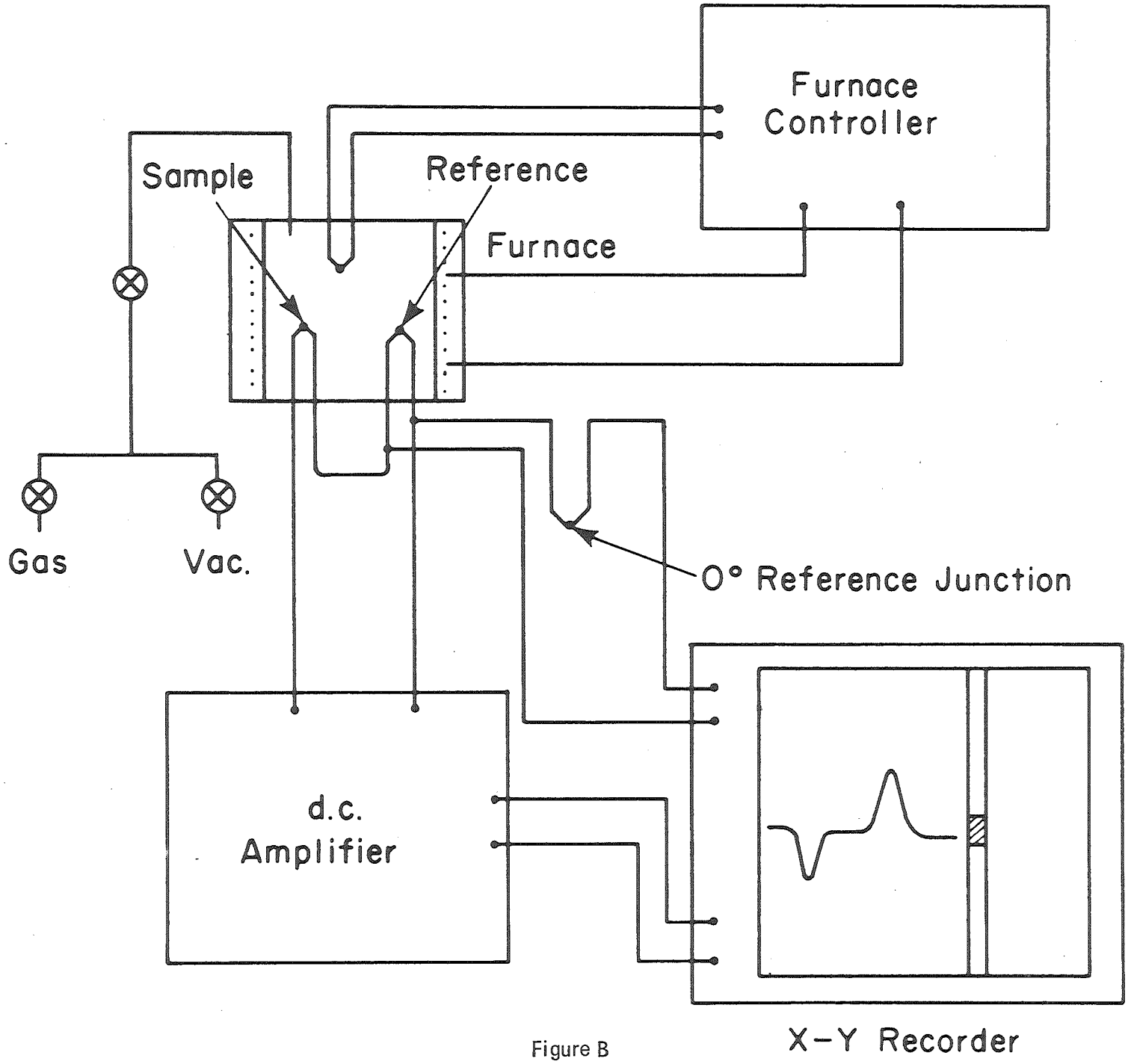
Furnace
Controller
Sample
Reference
Furnace
Gas
Vac.
0° Reference Junction
d.c.
Amplifier
X-Y Recorder

Figure B

INITIAL TEST APPARATUS FOR SSD PROJECT

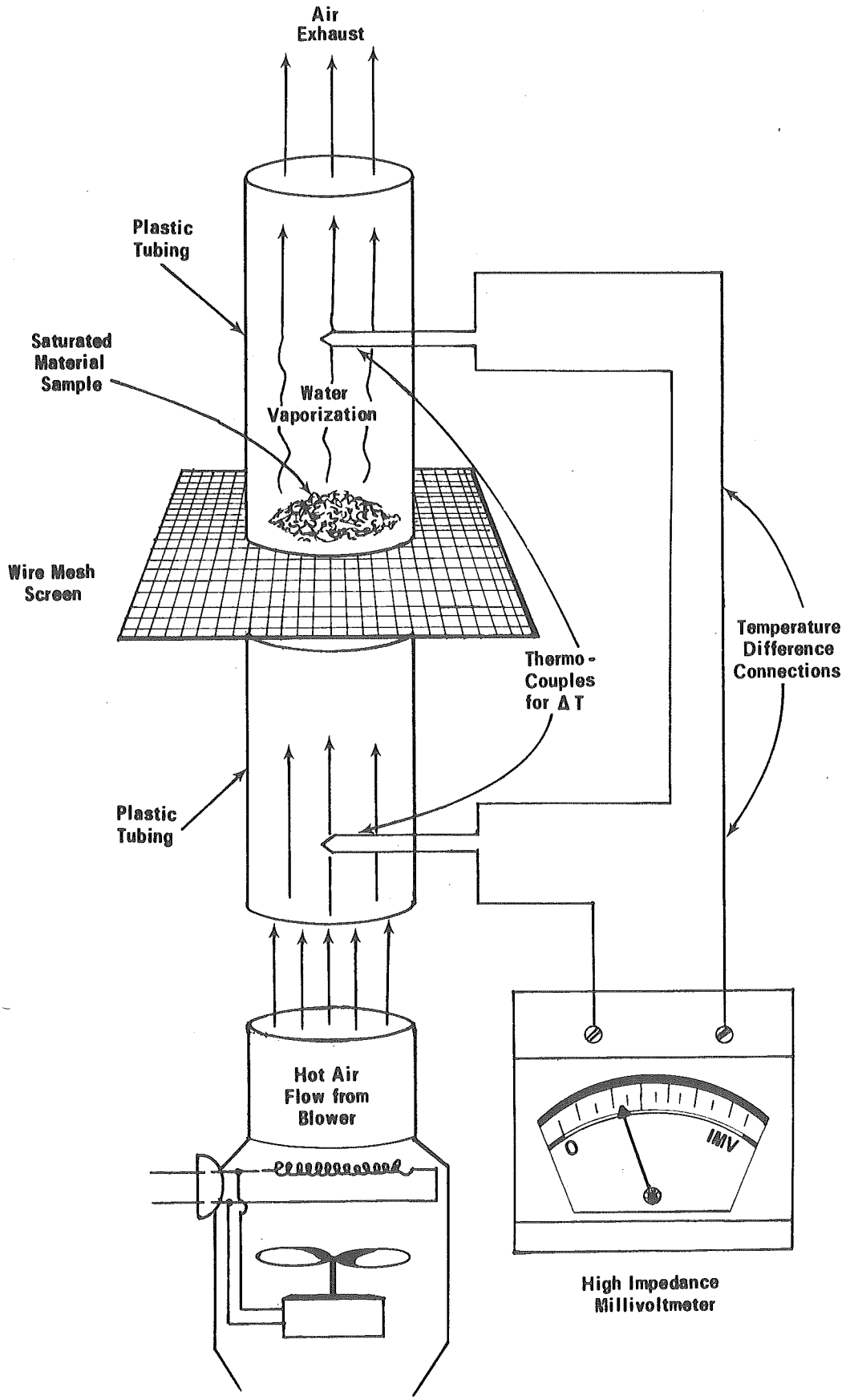

Figure C

INITIAL DIFFERENTIAL TEMPERATURE TEST FOR PROTOTYPE DEVELOPMENT (STANDARD ANDESITE)

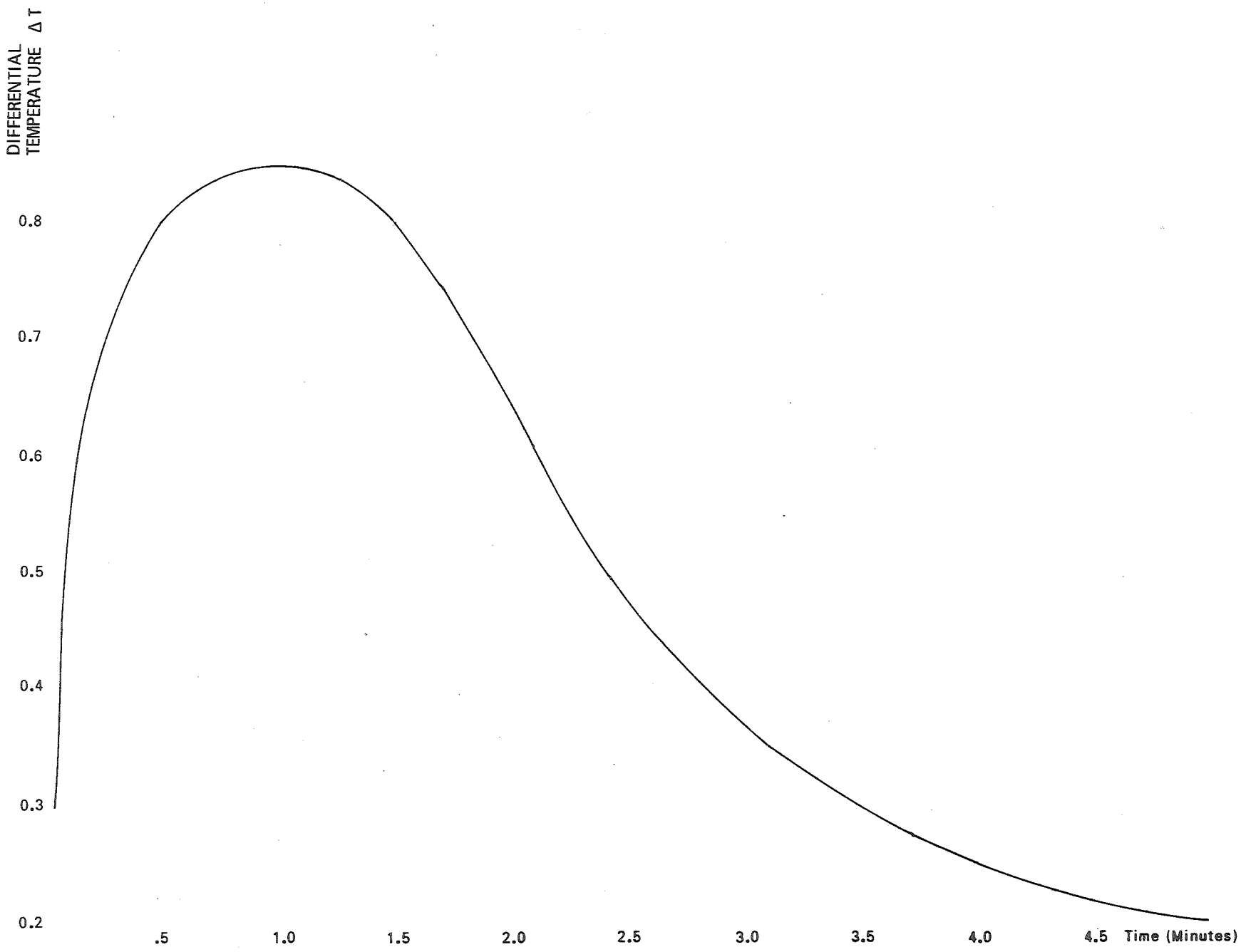

Figure D

BOTTOM VIEW OF SSD PROTOTYPE

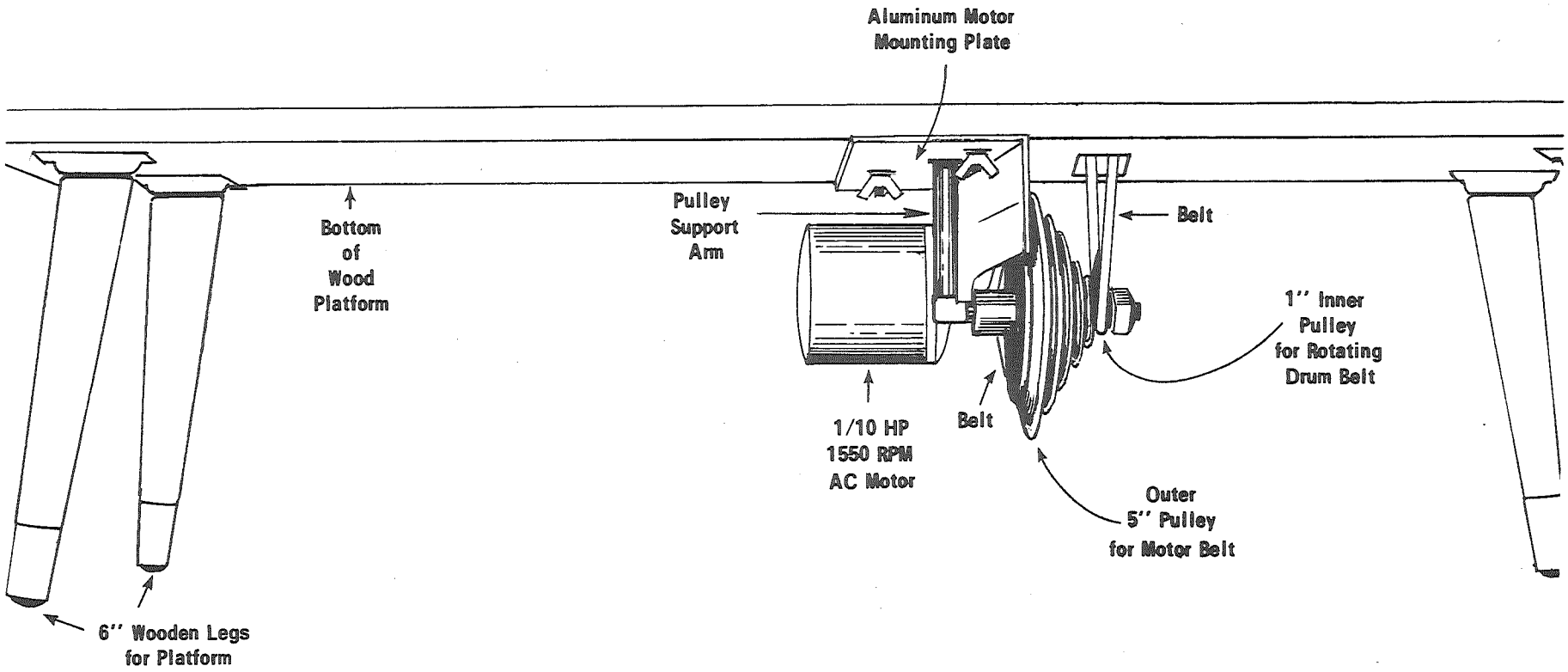

Figure E

TOP VIEW OF SSD PROTOTYPE

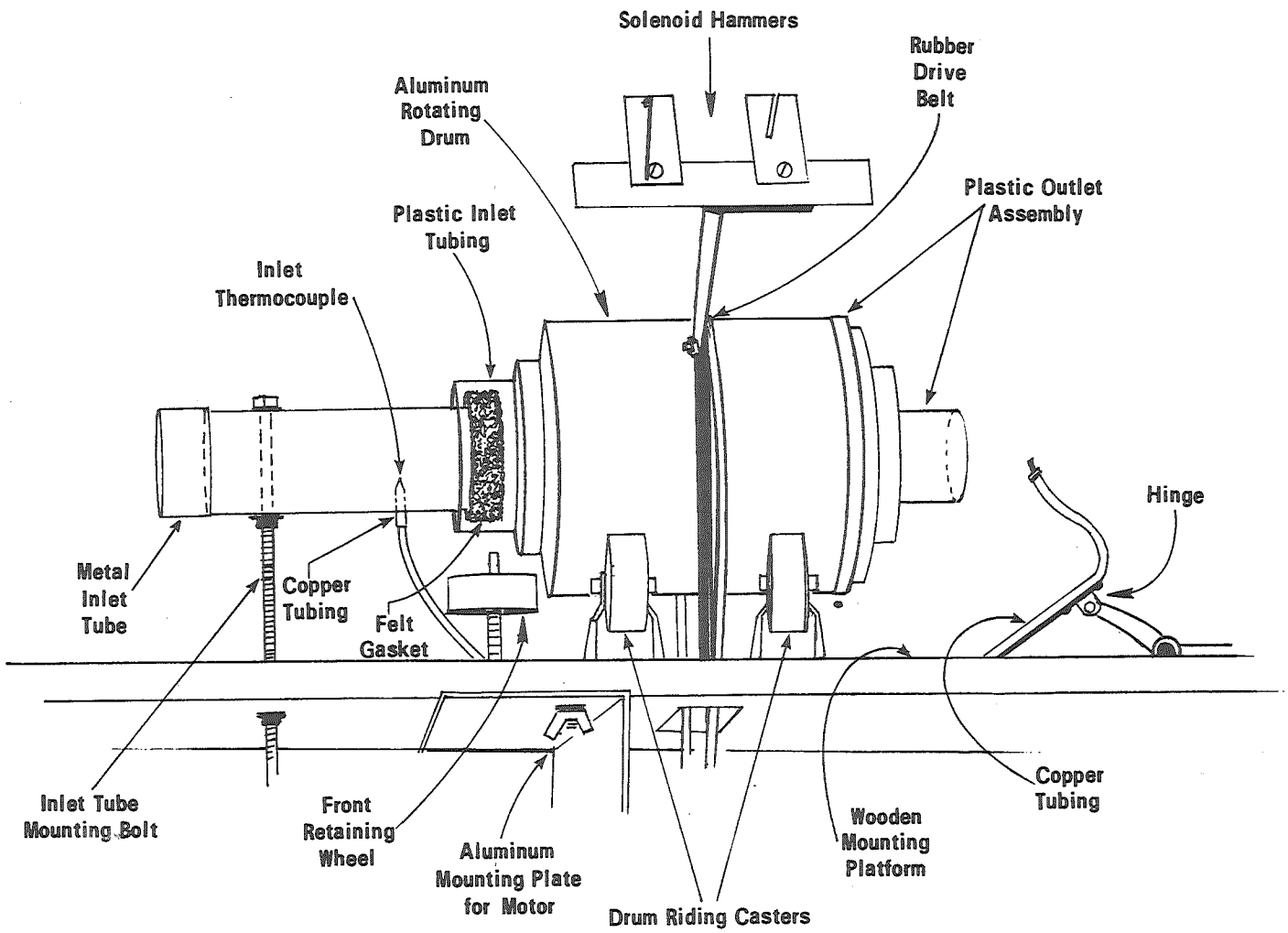

Figure F

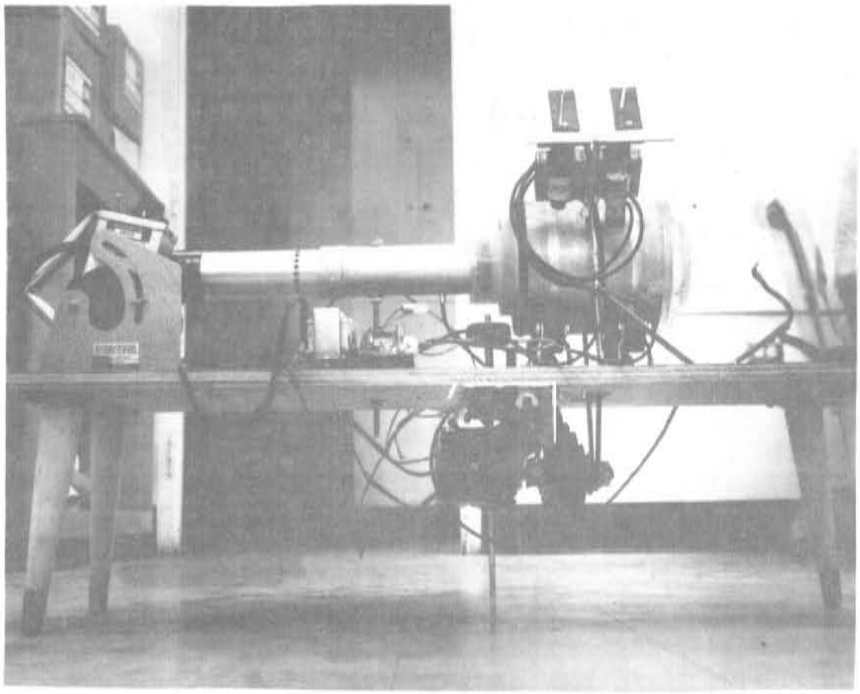

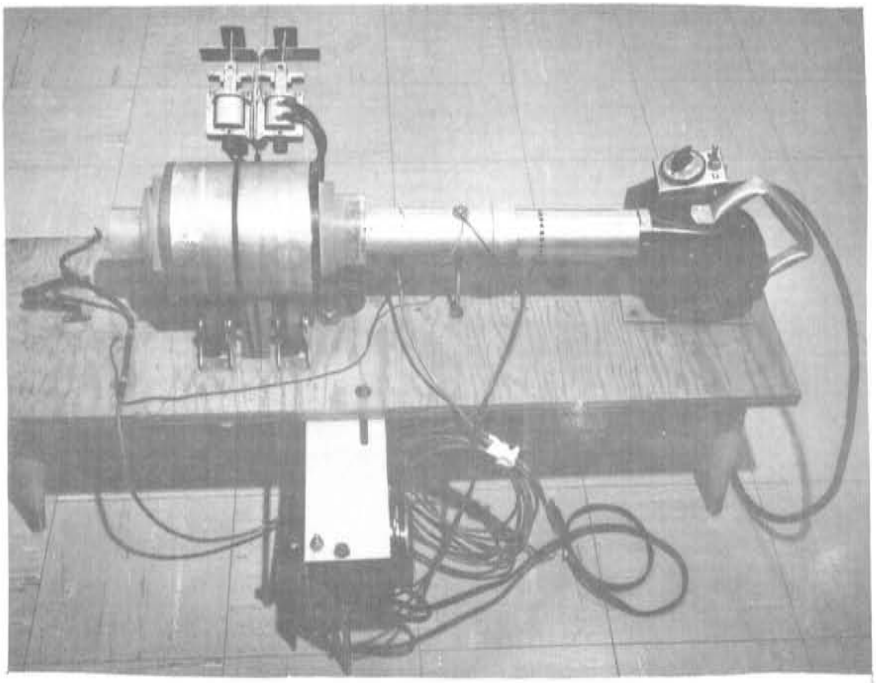

SYSTEM DIAGRAM FOR SSD PROTOTYPE TESTING APPARATUS

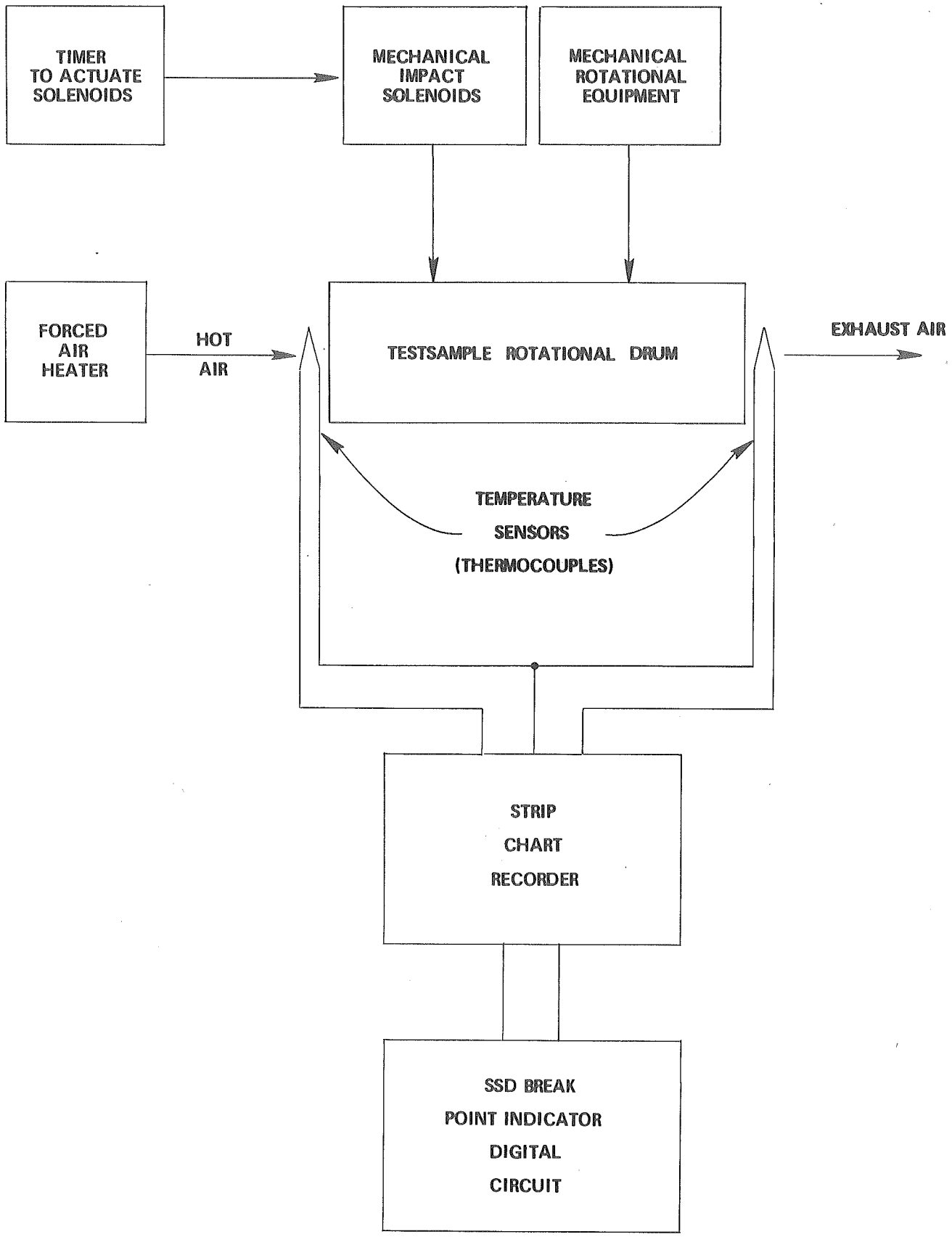

Figure G

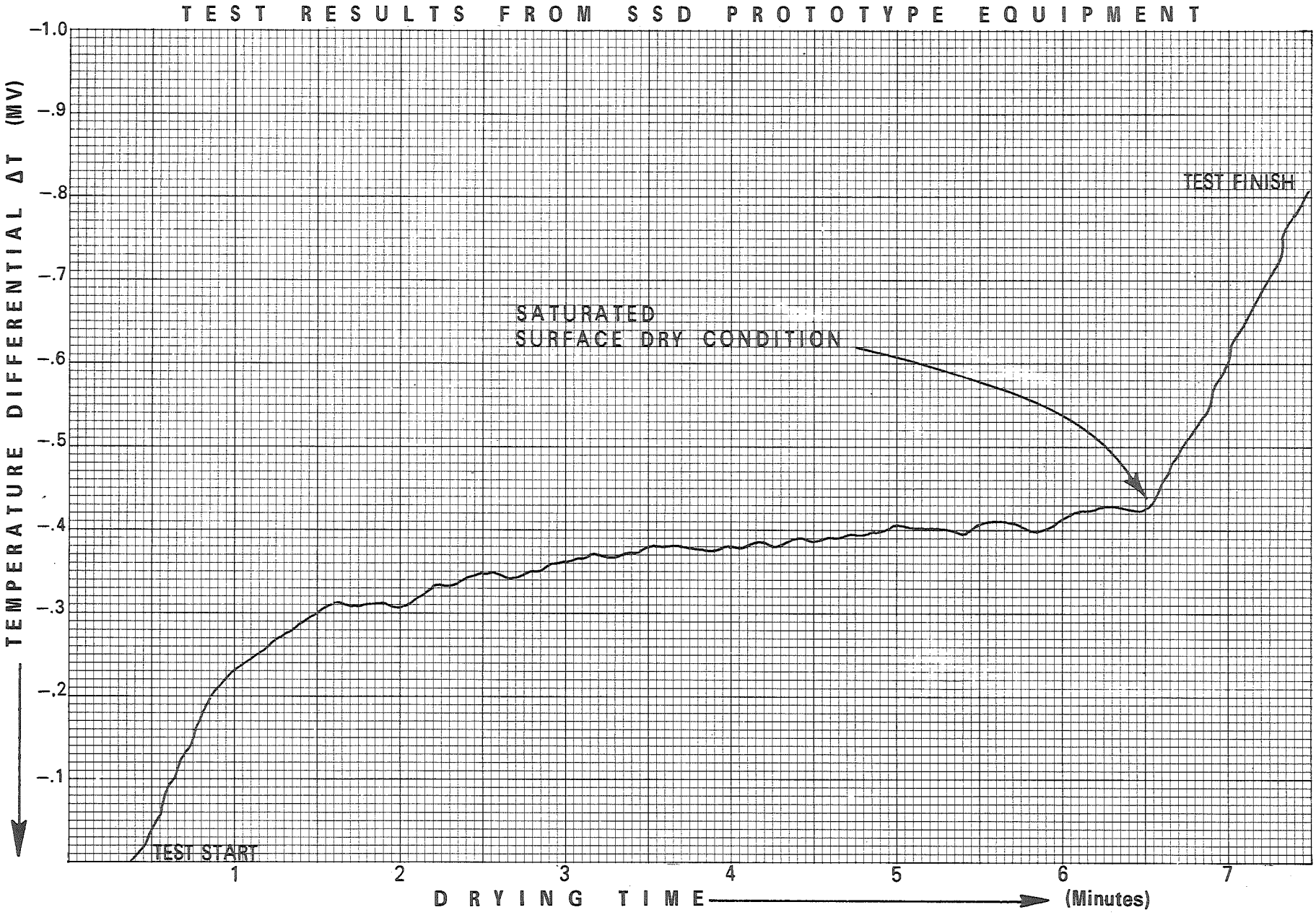
TEST RESULTS FROM SSD PROTOTYPE EQUIPMENT
TEMPERATURE DIFFERENTIAL ΔT (MV)
-1.0
-.9
-.8
-.7
-.6
-.5
-.4
-.3
-.2
-.1
SATURATED
SURFACE DRY CONDITION
TEST FINISH
TEST START
1
2
3
4
5
6
7
DRYING TIME
(Minutes)

Figure H

SSD GENERAL CURVE FROM TEST APPARATUS PROTOTYPE

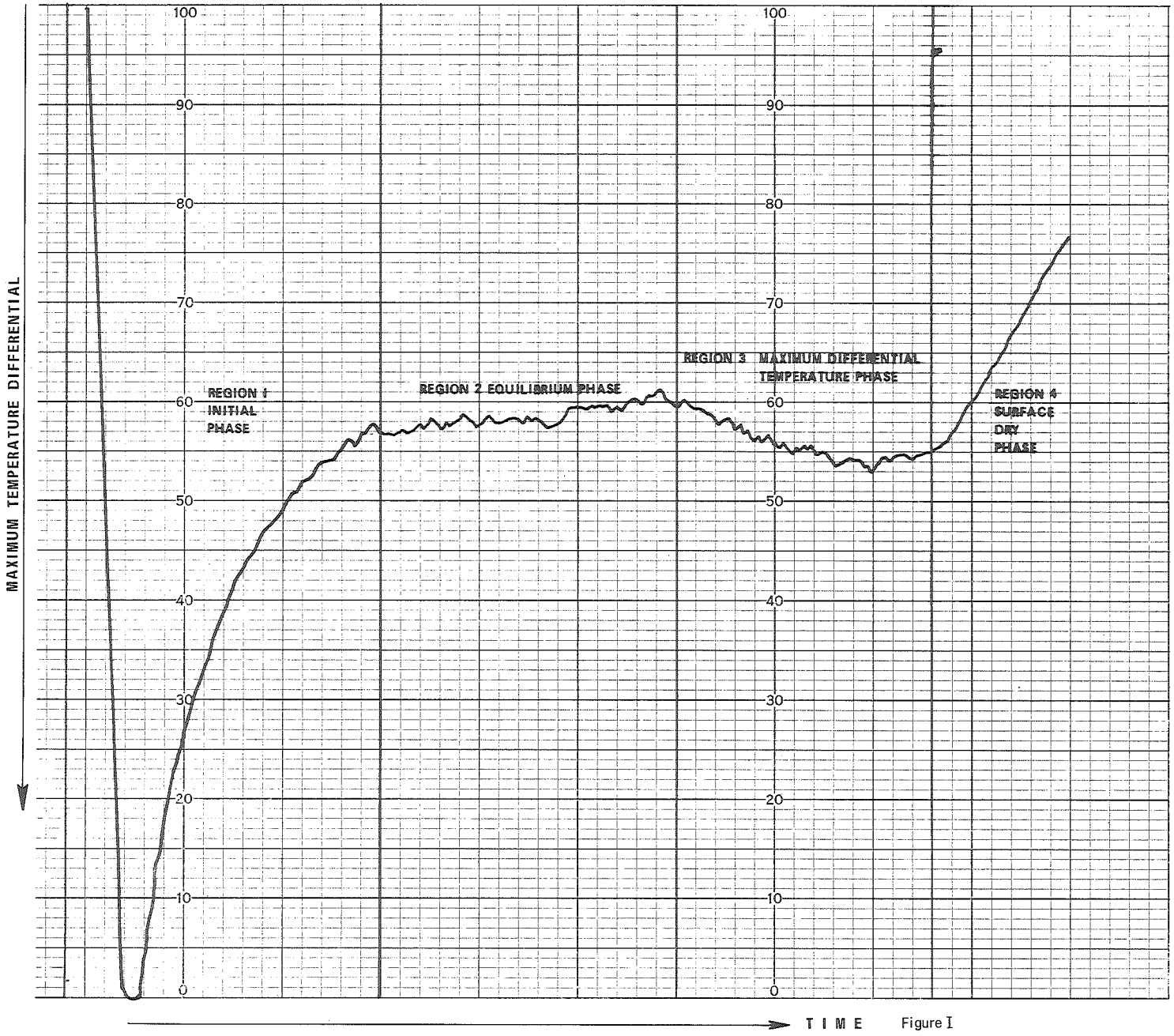

Figure I

MOISTURE % CURVE FOR SATURATED TO DRY CONDITION

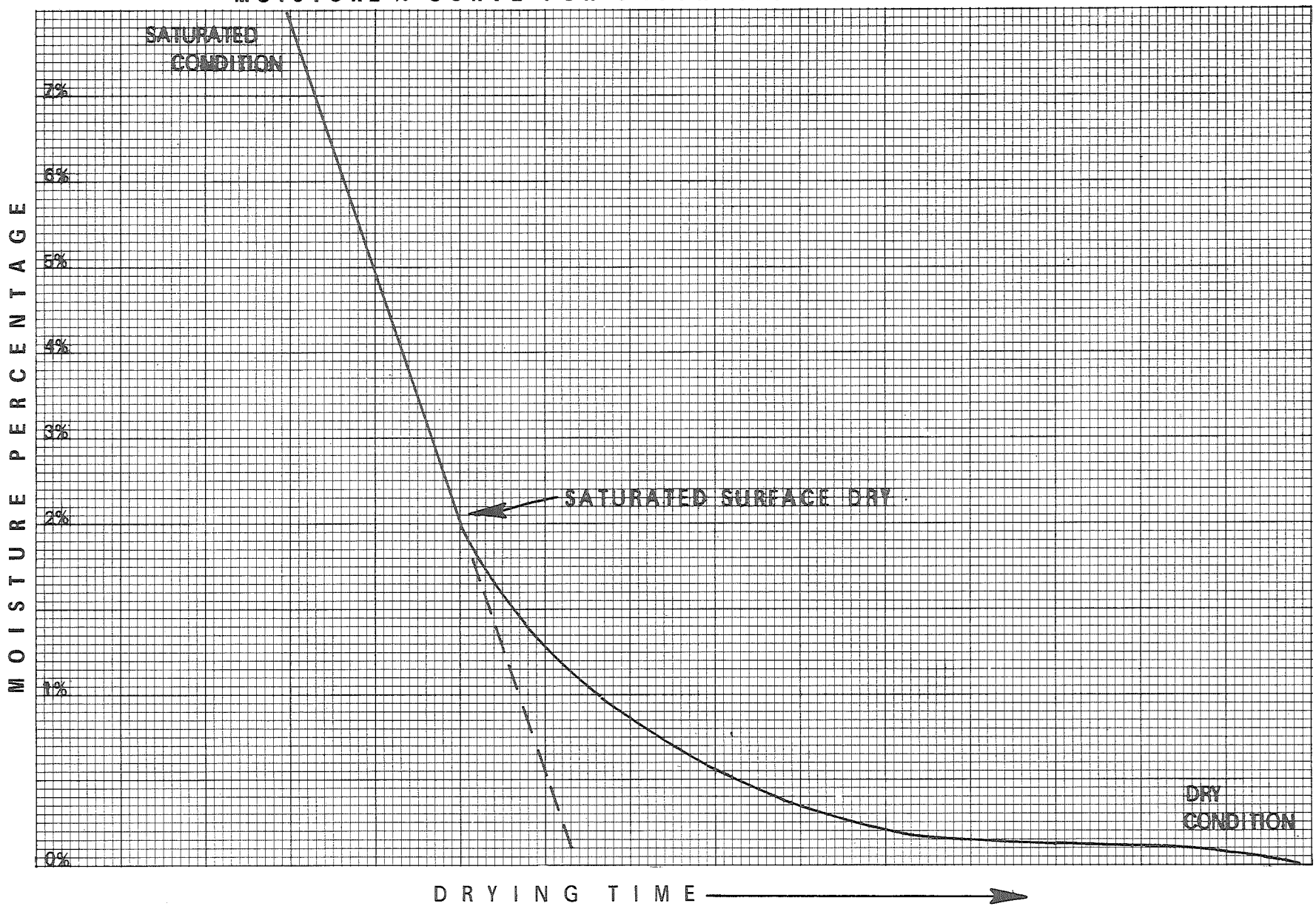

Figure J

RATE OF MOISTURE % CHANGE FOR SATURATED TO DRY CONDITION

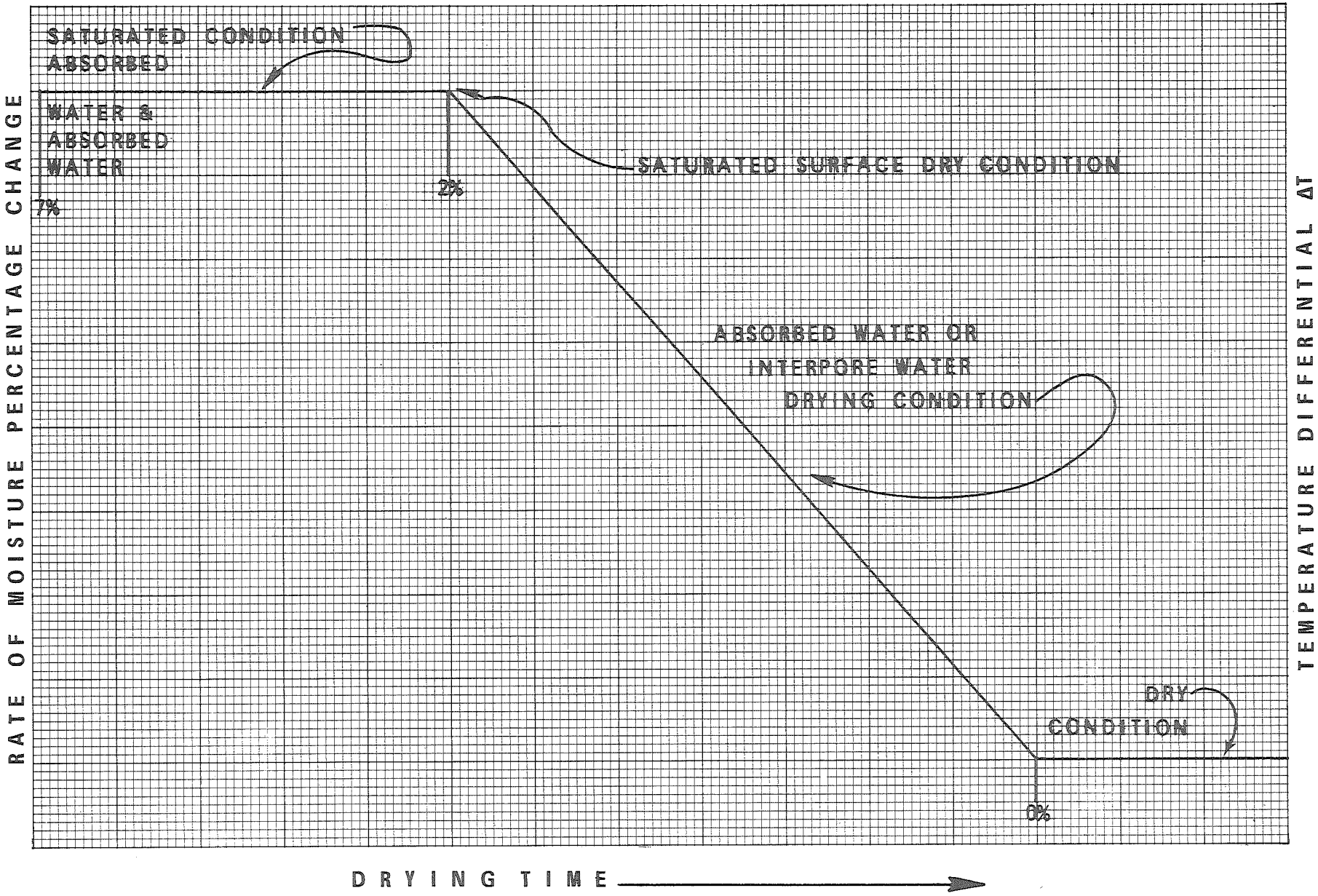

Figure K

CLASSIFICATION OF TEST MATERIALS

ANDESITE **Lab #39118** **Pit #6984**

Grading	RET	PASS	PI	SE
#4	0	100	NP	64
8	26	74		
10	6	68		
16	18	50		
30	18	32		
40	7	25		
50	7	18		
100	10	8		
200	3	5		
–200	5			

SCHIST **Lab #2122** **Pit #5145**

Grading	RET	PASS	PI		SE
#4	0	100	U	19	47
8	30	70	PL	18	
10	4	66	PI	1	
16	12	54			
30	12	42			
40	5	37			
50	7	30			
100	9	21			
200	7	14			
–200	14				

GRANITE **Lab # 3380** **Pit #5926**

Grading	RET	PASS	PI	SE
#4	0	100	NP	69
0	10	90		
10	6	84		
16	10	74		
30	19	55		
40	11	44		
50	11	33		
100	17	16		
200	8	8		
–200	8			

Figure L

SOLENOID PULSING CIRCUIT

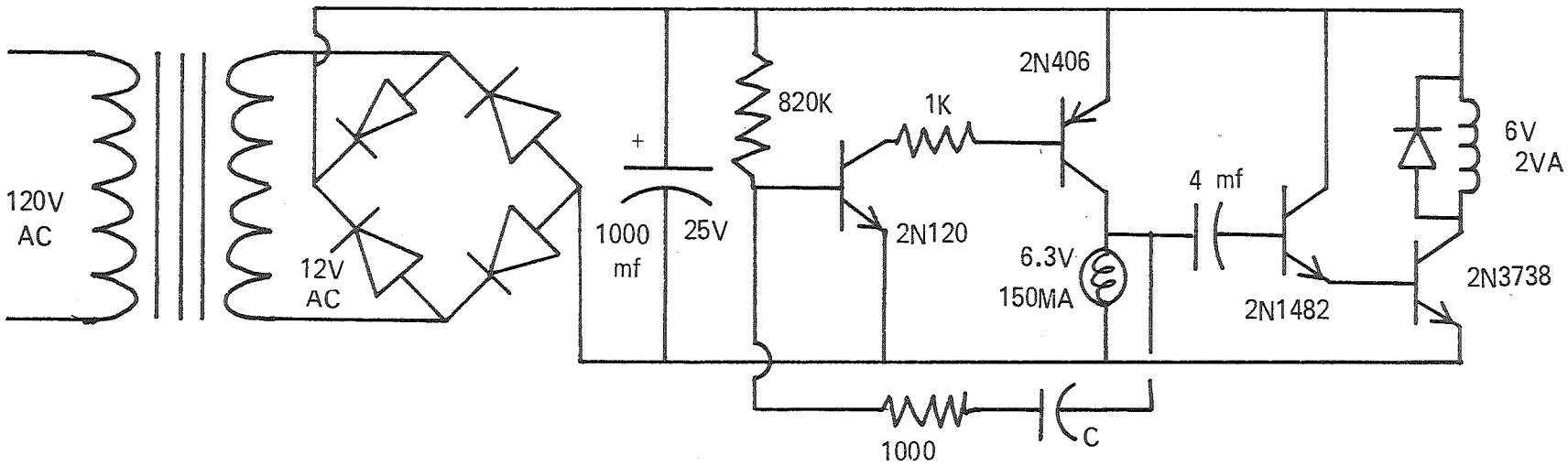

Figure M

SSD Indicator Circuit

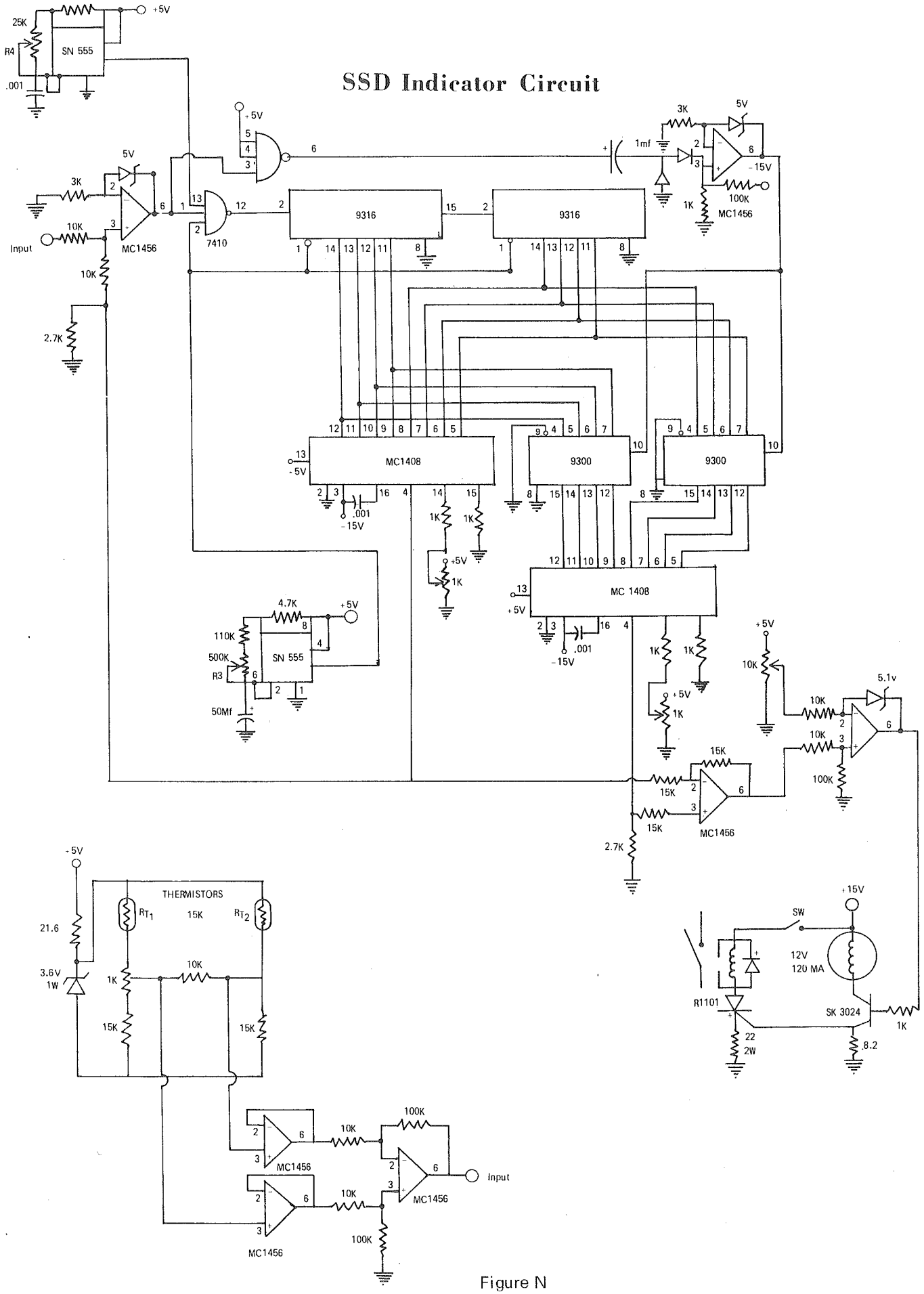

Figure N