TD100:A268-05

OBSERVATIONS OF LIMITED PAVEMENT FRICTION MEASUREMENTS WITH A SKID TRAILER

by

R. A. Jimenez
Department of Civil Engineering

Submitted to

The Arizona Highway Department
and
The Bureau of Public Roads

Research Project HPR-1(5)

The opinions, findings, and conclusions expressed in this publication are those of the author and not necessarily those of the Arizona Highway Department or the Bureau of Public Roads.

Arizona Transportation and Traffic Institute
College of Engineering
The University of Arizona
Tucson, Arizona

November, 1968

008634

OBSERVATIONS OF LIMITED PAVEMENT FRICTION MEASUREMENTS WITH A SKID TRAILER

By

R. A. Jimenez
Department of Civil Engineering
University of Arizona
Tucson, Arizona

Introduction

At the present the Arizona Traffic and Transportation Institute is conducting a study on pavement slipperiness for the Arizona Highway Department in cooperation with the Bureau of Public Roads. Under the existing program friction values of pavement have been obtained primarily with the stopping distance method. This method has been utilized because of the small number of tests to be made and because the test sites are located in rural areas where traffic control is not a difficult problem. Interest in the use of skid trailers has been keen, and when the opportunity to use such a measuring device presented itself, a request was made to the Bureau of Public Roads suggesting that their trailer be made available for observation and for comparison of friction values obtained with the stopping distance method.

The objectives of the cooperative testing for pavement friction with the BPR trailer were to familiarize selected personnel with the operations

of the device, to illustrate to state and city engineers the capability of the trailer, and to obtain skid numbers for pavement sections previously evaluated with the stopping distance method used in the current testing program.

Description of the skid trailer will be quite limited since this report is addressed primarily to those that participated in the program or are aware of the existence of such a device. In essence the pavement friction device consists of two units. The prime mover was a four-door International Harvester pick-up which carried a 500-gallon water tank, strain recording unit and its electric power plant, the two operators, and a two-wheeled trailer. The trailer was ballasted so that the load on each of the standard ASTM pavement friction testing tires was 1085 pounds. The axle to the wheels had strain gages so that when the wheels were locked, the drag force at the tire-pavement interface twisted the axle and its strain was indicated on the recorder connected to the strain gages. Knowing the weight, dimensions involved, and drag force, then the Skid Number (SN) could be computed. However, since several of these factors were constant, the SN was obtained by multiplying the needle deflection of the recorder with a calibration factor. In all testing the pavement was watered ahead of the tire to be skidded.

Testing Program

The Bureau's trailer and personnel were used for instruction and testing from September 4 - 12, 1968. Friction measurements were made

on highways leading to Gila Bend, Phoenix, Tucson, and Miami as well as on city streets of Phoenix and Tucson. The above were standard tests; however, a very limited amount of testing was done on a service road at the Tucson International Airport.

Results

The following discussion is generated from what is considered a limited and insufficient experience with the trailer by this writer; however, enough information was obtained to form a general opinion and make the following statements.

Operation of Trailer. - The BPR skid trailer is an excellent device for obtaining a measure of the slipperiness characteristics of pavement surfaces. In order to justify the cost of a comparable trailer there must be evidence that many pavements of high traffic volume are susceptible to becoming slippery; that is, there is a need for many tests and traffic control could be a problem. A small number of tests on low volume roads can be made economically and safely with the stopping distance method.

Operation of the skid trailer requires the use of a skilled technician to maintain the equipment, particularly the recorder. We are not being critical of the recorder used; the statement applies to any of the present electronic recorders. It is our experience that most vehicles carrying electronic equipment such as recorders, osciloscopes, and vibrators are equipped with air cooling units to protect these devices. Air

conditioning would be a requisite for a skid trailer used in Arizona during the summer months.

Use of the trailer in an open highway poses no problem, and we accept the users claim of covering 200 miles a day and making 400 measurements.

Use of the trailer in city streets is not as efficient as on highways, but the safety and minimal traffic control certainly warrant its use. Our use of the trailer on city streets with ADT of about 25,000 and traffic signals spaced as close as 1/4-mile apart required the use of two motorcycle policemen and "busting" red lights at the posted speed limits of 30 and 35 miles per hour. Several test runs were lost on account of confused drivers failing to move from the inside (test) lane to the outside one during the sounding of the police siren.

Four features of the trailer's operational procedures are worth receiving comments. First, a constant speed electric motor drove the pump which forced water to the pavement in front of the test wheel. This means that as trailer speed varied, the amount of water sprayed on the pavement also varied. Our data are not sufficient to determine whether this is an important factor.

Secondly, during testing only one wheel of the trailer was locked. In this condition the trailer swerved towards the left up to 1-1/2 feet from its original line, the rougher texture the greater the amount of displacement. Advantages of locking one wheel only are that one tire is worn instead of two (the second tire is being conditioned while testing is in progress) and also while skidding on a curve, tangential

movement of the trailer is minimized. However, the following two factors must be considered: (a) the pavement-tire friction force is not on a plane normal to the axle, and (b) during sliding the trailer weight is not distributed equally on the two wheels. Offhand it would appear that these two effects would balance out since the locked wheel would have the larger normal force (weight) but a component of the drag force would be causing a torque to the instrumented axle.

Thirdly, "calibration" of the trailer with the loaded beam attached to the wheel is really a check for the strain gages. Off-sets for the weight on the beam do not really represent the moment arm of the pavement friction force. This moment arm depends on the size of the tire and deflection of the tire during the skid. A limited amount of data was obtained with an other than standard tire. These data will be discussed later.

Fourthly, it would seem desirable to have a speed recorder in the truck to establish the actual speed during testing and, at least, to "calibrate" an inexperienced driver.

Test Values. - As mentioned earlier Skid Numbers (SN) obtained with both the skid trailer and stopping distance methods were to be compared. The ten test sites of our study program as well as our "calibration" site were tested for frictional characteristics at more than one speed.

The skid number obtained with the stopping distance method should properly be called Stopping Distance Number (SDN) since it was computed

using the distance travelled from the point of hitting the brake pedal to the point of rest. One should realize that the wheels of the test car do not lock immediately upon application of the brakes.

Table I shows the skid values obtained by the two methods at different speeds. It was expected that SDN should be higher than SN values for the same entering speed. This would be so since the trailer operates essentially as a "steady state" skid and the SDN is the equivalent value of the friction which is increasing as speed is reduced in stopping, as is shown in Figure 2.

Pavement friction was not obtained at the same time by the two methods. The stopping distance values were obtained from three weeks to three months earlier. This variation is the main one that may have had a separate effect on test sites 1, 2, and 6A. Test sites 1 and 2 were tested by the stopping distance method prior to being opened to traffic. It is believed that the three-month period of traffic had a greater effect on changing the friction value of TS-2, an open-graded hot seal, than it did on TS-1, a 3/8" dense-graded asphaltic concrete. We suspect that over this period of time the friction value for TS-2 increased while that for TS-1 decreased.

Test site 6A was a "bleeding" section that had been sand-blotted sometime prior to making the first skid measurements with the stopping distance method. The trailer Skid Number was obtained about six weeks later, and it is believed that the effects of the sand particles had been greatly lost by then.

Table I. Listing of Skid Numbers Obtained with the BPR Skid Trailer and the Stopping Distance Method at Different Speeds

Location & Tires	BPR Trailer 30 MPH	BPR Trailer 40 MPH	BPR Trailer 50 MPH	Stopping Distance 30 MPH	Stopping Distance 40 MPH	Stopping Distance 50 MPH
TS1 - ASTM		67			68	65
TS2 "		59			54	50
TS3 "		56	55		68	
TS4 "		52			62	
TS5 "		59	59		65	
TS6A "		42		59	55	50
TS7 "		58			63	59
TS8 "		59			57	56
TS9 "		52	50		57	53
TS10 "		56			59	53
Airport "	63	58	55	61	59	56
Airport-Slick	56	54	53	61		

Figure 1 shows a plot for a visual comparison of the friction values obtained by the two methods. Regression analyses of the data have not been attempted since it can be "seen" that the best fit line for the points will cross the line of equality near the Skid Number of 40, and it is unlikely the SN will be greater than SDN.

The solid line on Figure 1 is suggested by Kummer in Report 37 of the National Cooperative Highway Research Program. It would seem that our data do not fit Kummer's line. The reasons for this are not apparent except for our very limited number of points and range of friction values.

Modified testing with the trailer was done at the Tucson International Airport. Variables in these tests were speed, watering, and tire. Limitation of time available for testing resulted in obtaining insufficient and perhaps questionable data.

In the standard trailer testing, the pavement is watered a fraction of a second before the locked tire is pulled over the surface and as a consequence there is a slight reduction in the pavement surface temperature. In the stopping distance method used, the pavement was watered thoroughly and then rewetted prior to each skid test. In this procedure, surface temperature reductions of 40°F have been measured. Skid Numbers were obtained with the trailer for both methods of watering. These values are presented in Table 2. The data are not considered adequate for determining whether the watering variable caused the differences in friction values obtained. It seems that the two ASTM

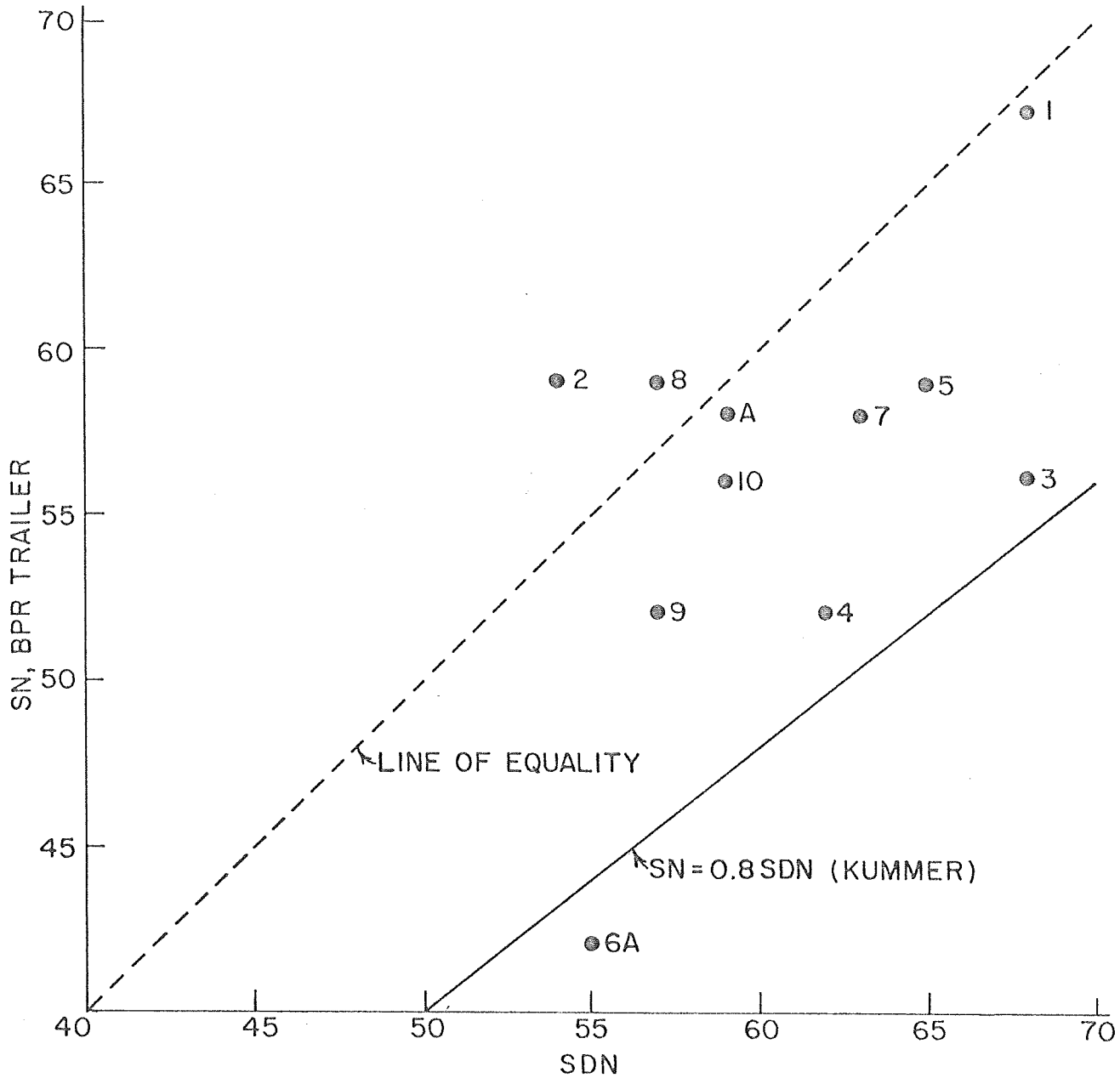

Figure 1. Comparison of Skid Numbers Obtained by Trailer and Stopping Distance Methods for Speed of 40 MPH

tires were not identical since we would expect to obtain lower friction values under "tanker watering" for these because a deeper film of water would be on the surface especially at the higher speeds. As noted in the table, the slick tires did yield lower friction value under the tanker watering. However, it is possible that the higher values of friction obtained with the new ASTM tires came about from an apparent greater moment arm (radius) of the drag force at the tire-pavement interface. Table 3 shows the radii obtained for the three tires by three methods. The difference in radii between the two ASTM tires is about 2 per cent, which cannot account for the 6 and 11 per cent differences in friction values at 30 and 50 mph, respectively. Of course, we are not sure of the exact testing speeds used.

Speed effects on values of SN and SDN are shown in Figure 2. The airport data obtained with ASTM tires would indicate that speed affects the values of SN and SDN to the same extent since the variations between the two lines are rather small.

Conclusions

Time and testing were somewhat limited in the observations made while using the Bureau of Public Roads skid trailer. The conclusions that follow were reached from our study program and from the technical literature reporting on skid testing.

1. The skid trailer is a valuable tool for research and routine testing for pavement slipperiness. The purchase of a skid

Table 2. Skid Numbers for BPR Trailers with Variable Watering and Tires

Speed MPH	Tire	Standard Watering	Tanker Watering
30	ASTM, used	63, 63	--
	Slicks*	57, 55	53
	ASTM, new	--	70, 67
40	ASTM, used	57, 59, 61	--
	Slicks*	55, 53	53
	ASTM, new	--	61
50	ASTM, used	55, 55	--
	Slicks*	53, 53	45
	ASTM, new	--	61

*Slick tires were commercial tires which had all the thread removed by buffing. The carcass surface was scratched and not really smooth.

Table 3. Radii of Three Trailer Mounted Tires by Three Methods

Radius, Ft.

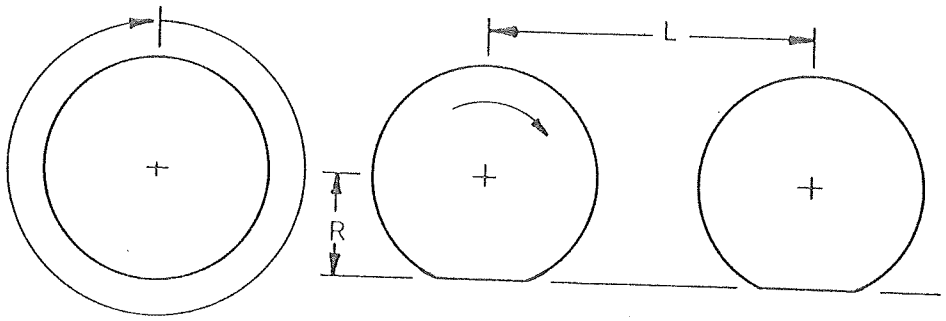

Tire	By Circumference	By Height	By Length
ASTM, used	1.13	1.05	1.07
Slicks*	1.14	1.05	1.10
ASTM, new	-	1.07	-

*Slick tires were commercial tires which had all the thread removed by buffing. The carcass surface was scratched and not really smooth.

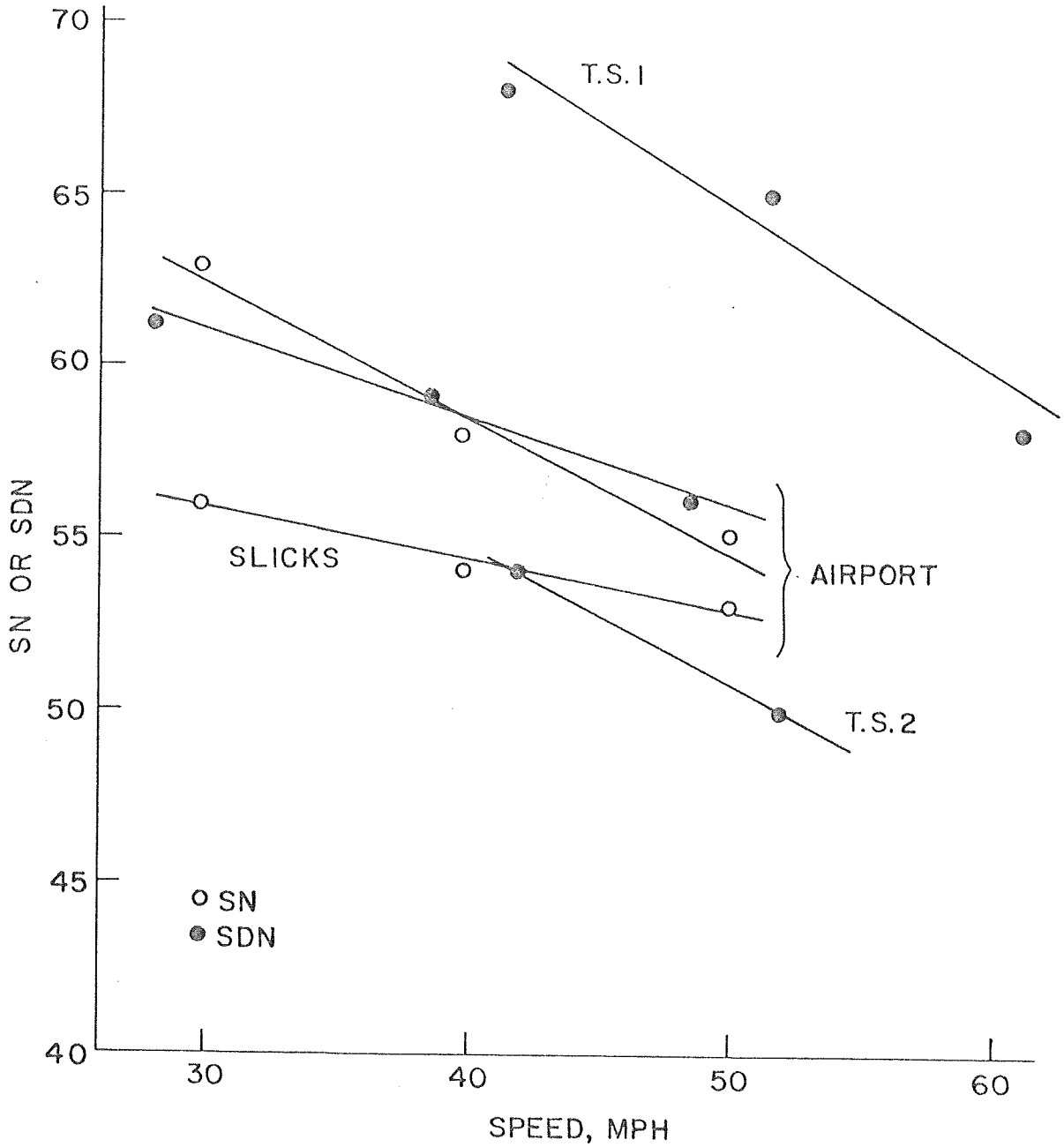

Figure 2. Effects of Speed on Values of SN and SDN