ARIZONA DEPARTMENT OF TRANSPORTATION

REPORT NUMBER: FHWA-AZ-7904

PERFORMANCE OF CONCRETE JOINT SEALANTS IN HOT CLIMATES

Final Report

Prepared by:
Frank R. McCullagh
Melville D'Souza
Timothy M. Wolfe

October 1987

Prepared for:
Arizona Department of Transportation
206 South 17th Avenue
Phoenix, Arizona 85007
in cooperation with
U.S. Department of Transportation
Federal Highway Administration

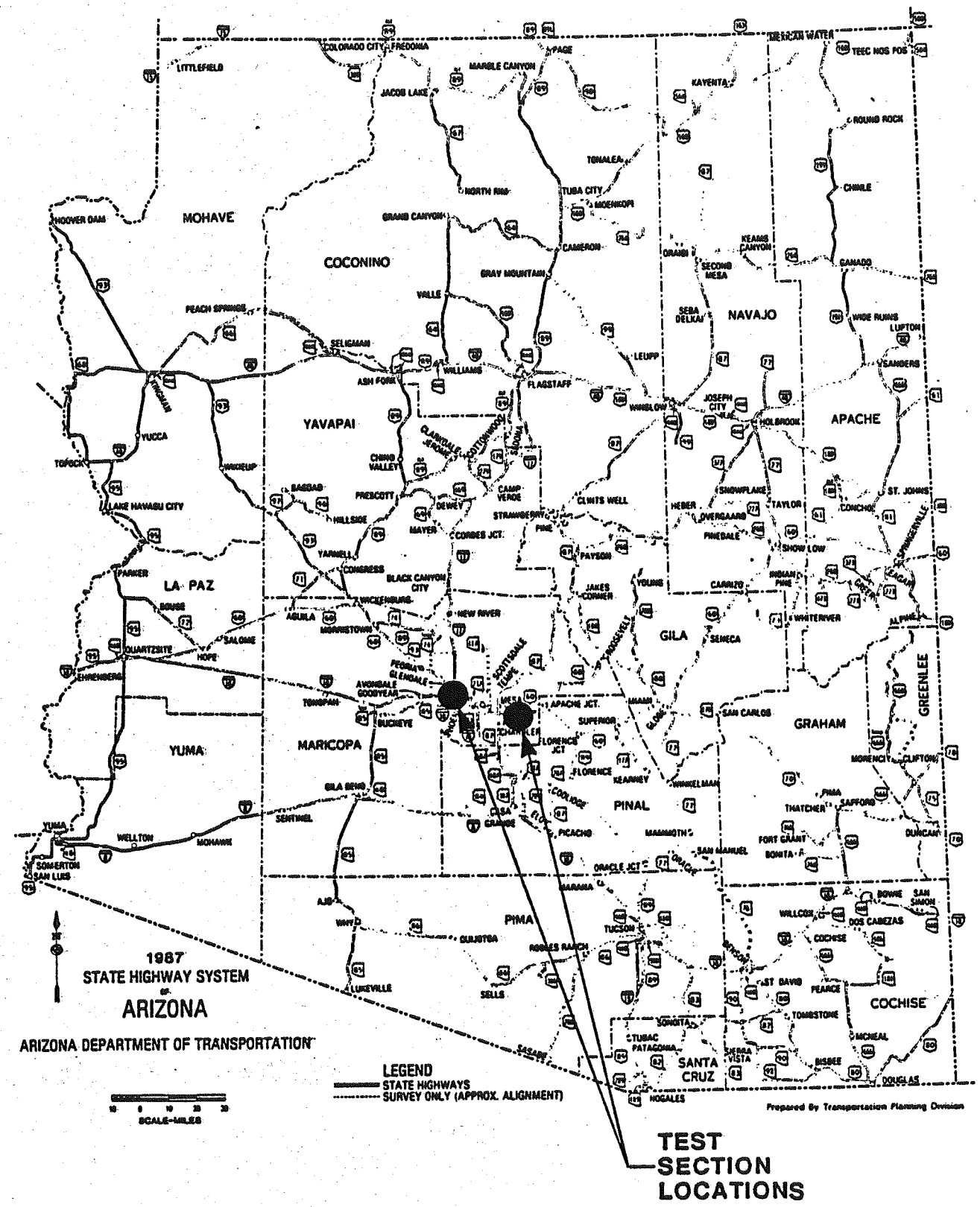

The contents of this report reflect the views of the authors who are responsible for the facts and the accuracy of the data presented herein. The contents do not necessarily reflect the official views or policies of the Arizona Department of Transportation or the Federal Highway Administration. This report does not constitute a standard, specification, or regulation. Trade or manufacturer's names which may appear herein are cited only because they are considered essential to the objectives of the report. The U. S. Government and the State of Arizona do not endorse products or manufacturers.

TECHNICAL REPORT DOCUMENTATION PAGE

1. REPORT NO. FHWA-AZ-7904	2. GOVERNMENT ACCESSION NO.	3. RECIPIENT'S CATALOG NO.
4. TITLE AND SUBTITLE Performance of Concrete Joint Sealants in Hot Climates		5. REPORT DATE November 1987 6. PERFORMING ORGANIZATION CODE
7. AUTHOR(S) Frank R. McCullagh, Timothy W. Wolfe, Melvill D'Souza		8. PERFORMING ORGANIZATION REPORT NO.
9. PERFORMING ORGANIZATION NAME AND ADDRESS Arizona Department of Transportation 206 South 17th Avenue Phoenix, Arizona 85007		10. WORK UNIT NO. 11. CONTRACT OR GRANT NO. HPR-PL-1(33) Item 114
12. SPONSORING AGENCY NAME AND ADDRESS ARIZONA DEPARTMENT OF TRANSPORTATION 206 S. 17TH AVENUE PHOENIX, ARIZONA 85007		13. TYPE OF REPORT & PERIOD COVERED Final Report June 1979-November 1987 14. SPONSORING AGENCY CODE

15. SUPPLEMENTARY NOTES

Prepared in cooperation with the U.S. Department of Transportation, Federal Highway Administration

16. ABSTRACT

A research project was initiated in 1979 on project IR-17-1(126) to compare and evaluate several joint sealants. In 1982 another test section on project F 028-1-506 was established to evaluate several other sealants. This report documents the placement and performance of these sealants, and presents recommendations for sealant material in hot climates.

The 1979 project is located on the northbound lanes of the Black Canyon Freeway, in Phoenix, between the Northern Avenue underpass and the Northern Avenue northbound on-ramp. The test section is approximately 1500' long and includes three lanes of PCCP in each direction.

A total of five products were evaluated on the Black Canyon Freeway: Dow corning 888, Superseal 444, Overflex-MS2, ARCO III, and ADOT's own formula of MC250 with rubber.

The second experimental project was initiated in October 1982 and is located on both the eastbound and westbound lanes of the Superstition Freeway between Gilbert Road and Lindsey Road in Mesa, Arizona.

Four products were evaluated on the Superstition Freeway: General Electric's low modulus silicone SCS 4403, Tremco's THC-900 and Kitimine, and Superseal 444.

Based on these two test sections it was found that if a silicone sealant is placed properly it will perform better than the PVC coal tar, asphalt-rubber, and polyurethane products that were tested.

17. KEY WORDS Concrete, Joint Sealants, Silicone, Polyurethane, PUC, Asphalt Rubber	18. DISTRIBUTION STATEMENT Document is available to the U.S. public through the National Technical Information Service, Springfield, Virginia 22161

19. SECURITY CLASSIF. (of this report) Unclassified	20. SECURITY CLASSIF. (of this page) Unclassified	21. NO. OF PAGES 38	22. PRICE

PREFACE

This report contains the findings of two different experimental projects. The first project, which was constructed in 1979, was developed as an Experimental Project (AZ7904) in cooperation with the Federal Highway Administration. The second project, which was constructed in 1982, was developed in-house as a state sponsored project.

After completion of the first project Mr. Frank McCullagh and Mr. David Stephens both wrote reports documenting the construction of the project. Since that time evaluations have been performed by the staff of the Arizona Transportation Research Center (ATRC). In 1984 Mr. McCullagh and Mr. Melville D'Souza wrote a report entitled, "A Five Year Evaluation of Concrete Pavement Joint Sealants". The construction of the second project was documented by Mr. McCullagh. Periodic evaluations on this project have also been performed by the ATRC.

In 1985 Mr. McCullagh and Mr. D'Souza wrote a report on the status of both test sections. The majority of the evaluation was completed on the first project; however, the second project still needed further evaluation prior to drawing any conclusions.

This report is a compilation of the previous work as well as a discussion of the recent evaluations. Most of the 1985 report is included in this report. The final evaluations, conclusions, and editing have been done by Mr. Timothy Wolfe. Since a great deal of information from the earlier report is included in this report both Mr. McCullagh and Mr. D'Souza are listed as authors.

All three authors are greatly indebted to the many individuals who helped in the construction and evaluation of both projects.

TABLE OF CONTENTS

		Page No.
I.	INTRODUCTION	1
II.	I-17, BLACK CANYON FREEWAY PROJECT	1
A.	PROJECT BACKGROUND	1
B.	DESCRIPTION OF MATERIAL	2
C.	PROJECT DESCRIPTION	3
D.	CONSTRUCTION	4
E.	PERFORMANCE	9
III.	SR360, SUPERSTITION FREEWAY PROJECT	13
A.	PROJECT BACKGROUND	13
B.	DESCRIPTION OF MATERIAL	13
C.	PROJECT DESCRIPTION	14
D.	CONSTRUCTION	14
E.	PERFORMANCE	16
IV.	SUMMARY AND RECOMMENDATIONS	18
REFERENCES		20
APPENDIX		
	DOW CORNING PRODUCT SPECIFICATION	A1
	SUPERSEAL PRODUCT SPECIFICATION	A5
	CRAFCO PRODUCT SPECIFICATION	A7
	TREMCO PRODUCT SPECIFICATION	A8
	GENERAL ELECTRIC PRODUCT SPECIFICATION	A10

LIST OF FIGURES

		Page No.
1	TRANSVERSE JOINT 15 FOOT INTERVAL	4
2	TRANSVERSE JOINT 60 FOOT INTERVAL	4
3	LOCATION OF TEST SEALANTS	5
4	DOW CORNING 888 JOINT	7
5	SUPERSEAL 444 JOINT	7
6	OVERFLEX-MS2 JOINT	7
7	ARCO ASPHALT RUBBER JOINT	7
8	PLACING DOW 888	7
9	PLACING DOW 888	8
10	PLACING SUPERSEAL 444	8
11	SUPERSEAL 444 JOINT	11
12	INCOMPRESSIBLES EMBEDDED IN ARCO SEALANT	11
13	ADOT'S JOINT SEALANT	12
14	TYPICAL EXPERIMENTAL JOINT	14
15	LOCATION OF SEALANTS	15
16	PRIMING JOINTS	17
17	PLACING POLYURETHANE	17
18	PLACING G. E. SILICONE	17

LIST OF TABLES

		Page No.
1	SUMMARY OF SEALANTS TESTED (I 17)	2
2	MANUFACTURERS' JOINT SPECIFICATION	3
3	SUMMARY OF SEALANTS TESTED(SR 360)	13

I. INTRODUCTION

Transverse joints in concrete pavements are placed to allow for contraction, expansion, and warping of slabs and to eliminate random cracking. Joints are sealed to keep water and incompressibles out. When water infiltrates the joint, it can weaken or destroy the base, subbase or subgrade support of the pavement and may result in pumping. Voids may then develop under the pavement leading to faulting, cracking or settlement. Corrosion of load transfer devices or tie bars can also result. Incompressible materials in the joint can create localized stresses in the concrete. As a result, pavements may suffer raveling, spalling and blow ups resulting in reduced rideability and premature pavement failures. Incompressibles in joints can lead to pavement growth and damage to structures.

In order to perform its intended function, a joint sealer must remain in contact with the joint faces. The sealer material must be resilient at all temperatures, not becoming excessively soft at high temperatures nor hard and brittle at low temperatures. An excessively soft material is susceptible to the intrusion of incompressibles and may sag into the joint or be pushed out of the joint by traffic. On the other hand, an excessively brittle material may separate by adhesive failure from the joint face or fail in cohesion as the joint width increases. Brittle materials also fail to recover after being stressed. An effective joint sealer must also resist the effects of chemicals and the environmental conditions which tend to change its properties. An effective joint sealant should retain it's original properties over the design life of the pavement and have a reasonably low cost.

There are other considerations in the selection of a joint sealant material, such as the handling and installation requirements. For example, can readily available tools and equipment be used? Will extensive training be needed? Is the material toxic in any way (worker safety, environment)? What is the shelf life, pot life, and the cure time? All of these items must be taken into account in choosing a joint sealant.

An experimental research project was initiated in 1979 on a reconstruction project to compare and evaluate several joint sealants in hot climates. In 1982 another test section on new construction was established to evaluate several other sealants. The purpose of these investigations was to observe and evaluate the placement of the joint sealants and then monitor their performance. This report documents the placement and performance of the joint sealants and presents recommendations for sealant material in hot climates.

II. I-17 BLACK CANYON FREEWAY PROJECT

A. Project Background

Several suppliers of joint sealants expressed an interest in taking part in this experimental project. Based on its success in Georgia, it was decided to evaluate a low modulus silicone sealant . Based on ADOT's experience with crack fillers, two asphalt-rubber products were also incorporated. A comparison was to be made with a PVC-coal tar product which had been specified on a number of ADOT projects. Four manufacturers participated in the project and four products representing three sealer types were installed. Additionally, a joint and crack sealant developed in ADOT's Flagstaff office was placed bringing the total number of products tested to five.

TABLE 1. - SUMMARY OF SEALANTS TESTED (I 17)

MATERIAL TYPE	NUMBER OF JOINTS
Dow Corning 888	24
Superseal 444	27
Overflex-MS2	22
ARCO Asphalt Rubber	25
Asphalt Rubber (ADOT)	1

B. Description of Material

The product specifications for the Dow Corning 888, Superseal 444, and Overflex-MS2 are given in Appendix D. No information was available for the ARCO and ADOT products. The following is a description of each of the products used on this project.

1. **Dow Corning 888:**

   Dow Corning 888 is a one-component, cold poured, low modulus rubber formulation that cures on exposure to atmospheric moisture to form a flexible seal. It's elongation and rebound capabilities and it's ability to adhere to concrete without a primer have been demonstrated[1]. Although it adheres well to portland cement concrete, it does not adhere to asphalt-concrete.

2. **Superseal 444:**

   Superseal 444 is a one-component, hot-poured joint sealant. It is a blend of polyvinylchloride and coal tar and is supplied as a liquid which is heated to approximately 275°F prior to application. The sealant is placed in joints to a depth of 1" below the pavement over an upholstery cord. The final surface of the sealant elevation is 1/4" below the pavement surface.

   Superseal 444 has been used extensively in Arizona since 1974. Experience has shown that the joint must be well cleaned in order to develop a bond between the sealant and concrete. It is also important that joints are not overfilled with sealant, otherwise a loss of bond will result. If the backer rod becomes saturated with moisture, it can force the sealant above the pavement surface causing the sealant to be torn out by traffic.

3. **Overflex-MS2:**

   Overflex-MS2 is an asphalt modified rubber compound. It is offered in two grades, one for colder climates and the other for warmer climates. The joints should be thoroughly cleaned before the hot sealant is poured into the joint to ensure good bond. The curing time ranges from fifteen minutes to one hour depending on the site temperature. It is supplied as a prepacked block and heated to 375°F in a double-boiler melter kettle prior to application.

4. **ARCO Asphalt Rubber:**

   Arizona Refining Company's asphalt rubber joint sealant is a blend of 75 percent asphalt with 25 percent blended ground rubber. The sealant is produced by adding bags of blended rubber to preheated AR-2000 asphalt in a double-boiler melter kettle and allowing the materials to react. This sealant has been used in Arizona since

1974. Field reports indicate that the rubberized asphalt dries out in the joints, accepts incompressibles, and flows or extrudes from the joints.

5. **Asphalt Rubber (ADOT):**

This rubberized asphalt is a blend of MC-250 liquid asphalt and rubber. This product is made in 600 gallon quantities by blending 25 percent TPO 165 rubber with cutback asphalt at 250°F. Whole bags of TPO 165 rubber including the plastic wrapping are placed into a distributor truck containing the liquid asphalt. This is then blended into the asphalt with a reverse hand drill placed on an auger drill suspended through the top of the double boiler tanks.

C. Project Description

1. **Location of the Project:**

This experimental project was initiated in June, 1979 and is located on the northbound lanes of the Black Canyon Freeway, in Phoenix, between the Northern Avenue underpass and the Northern Avenue northbound on-ramp. The test section is approximately 1500' long and includes three lanes of pavement in each direction as well as the inside and outside shoulders. The test section is located in the City of Phoenix which has a desert environment with less than 6" of rain per year. Summer temperatures can exceed 115°F and winter temperatures as low as 20°F. In 1979 when the project was constructed the average daily traffic on the Black Canyon Freeway was 97,000 vehicles (48,500 ADT on the test section) and the current ADT is 125,000 (62,500 ADT on the test section).

2. **Test Section Description:**

The mainline pavement is a 36' wide, 9" thick, plain jointed, portland cement concrete pavement. Both longitudinal and transverse joints are sawed joints. The transverse joints are 1/2" wide, 2-1/4" deep and are spaced 15' apart (Figure 1). Full depth transverse cracks were induced at about 60 foot intervals. At these locations, the joints are 3/4" wide and have metal inserts as illustrated in Figure 2.

The rehabilitation project IR-17-1(126) consisted of grinding the existing pavement, sawing and sealing the joints, and removing and replacing the asphalt shoulder from milepost 201.9 to 208.19 northbound. The original specification called for sealing with a PVC-Coal Tar.

Joint geometries for the experimental project were constructed in accordance with the corresponding manufacturer's specifications (Table 2). The location of the different test sealants on the project are illustrated in Figure 3.

TABLE 2. - MANUFACTURERS' JOINT SPECIFICATION

Sealant	Joint Width	Joint Depth	Backer Rod
Dow Corning 888	1/2"	1 1/4"	polyurethane rod
Superseal 444	1/2"	1 5/8"	upholstery cord
Overflex-MS2	1/2"	1 5/8"	upholstery cord
ARCO Asphalt Rubber	1/2"	1 1/2"	upholstery cord
Asphalt Rubber (ADOT)	1/2"	1 1/4"	upholstery cord

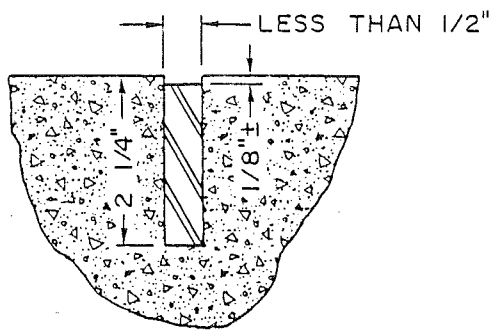

FIGURE 1. TRANSVERSE JOINT 15 FOOT INTERVAL

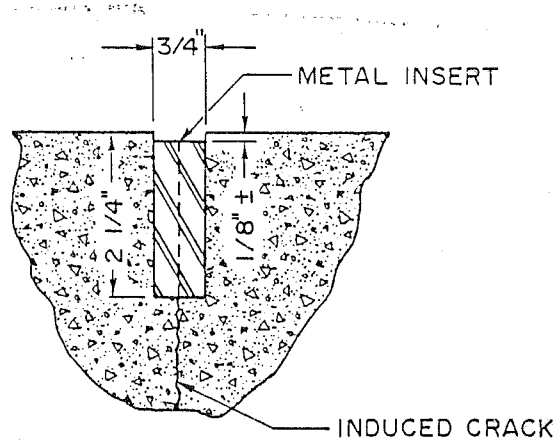

FIGURE 2. TRANSVERSE JOINT 60 FOOT INTERVAL

D. Construction

Before installation of the experimental sealers, the existing joints were sawed to the dimensions specified by each manufacturer. All metal inserts (Figure 2) were sawed and removed. Following the sawing operation, the joints were thoroughly cleaned by sand blasting and compressed air.

The preparation of the joint for sealant installation was done by the contractor; however, because the primary objective of the study was to assess the various products with other variables minimized as much as possible, it was decided that the manufacturers would install their own products. Since care in product placement and knowledge of the applicator influences sealant performance, placing of the sealant by the manufacturer represented a more controlled experiment.

1. Dow Corning 888

Dow 888, unlike the other sealants used on this project, is cold applied. Prior to the placement of the joint sealant, a 5/8" diameter polyurethane foam backer rod was placed in the joints to a depth of 7/8" below the pavement surface (Figure 4).

The equipment used to place the sealant consisted of a pneumatic pump designed to pump the material from five gallon containers through a flexible hose to an operator held wand (Figures 8 and 9). The four foot long wand was held at a sixty degree angle to the pavement surface during operation. An operator controlled flow valve was mounted at the upper end of the wand and a nozzle tapered to fit into the joint was attached to the lower end of the wand. In order to guide the cold- flow

JOINT SEALANT STUDY BLACK CANYON FREEWAY

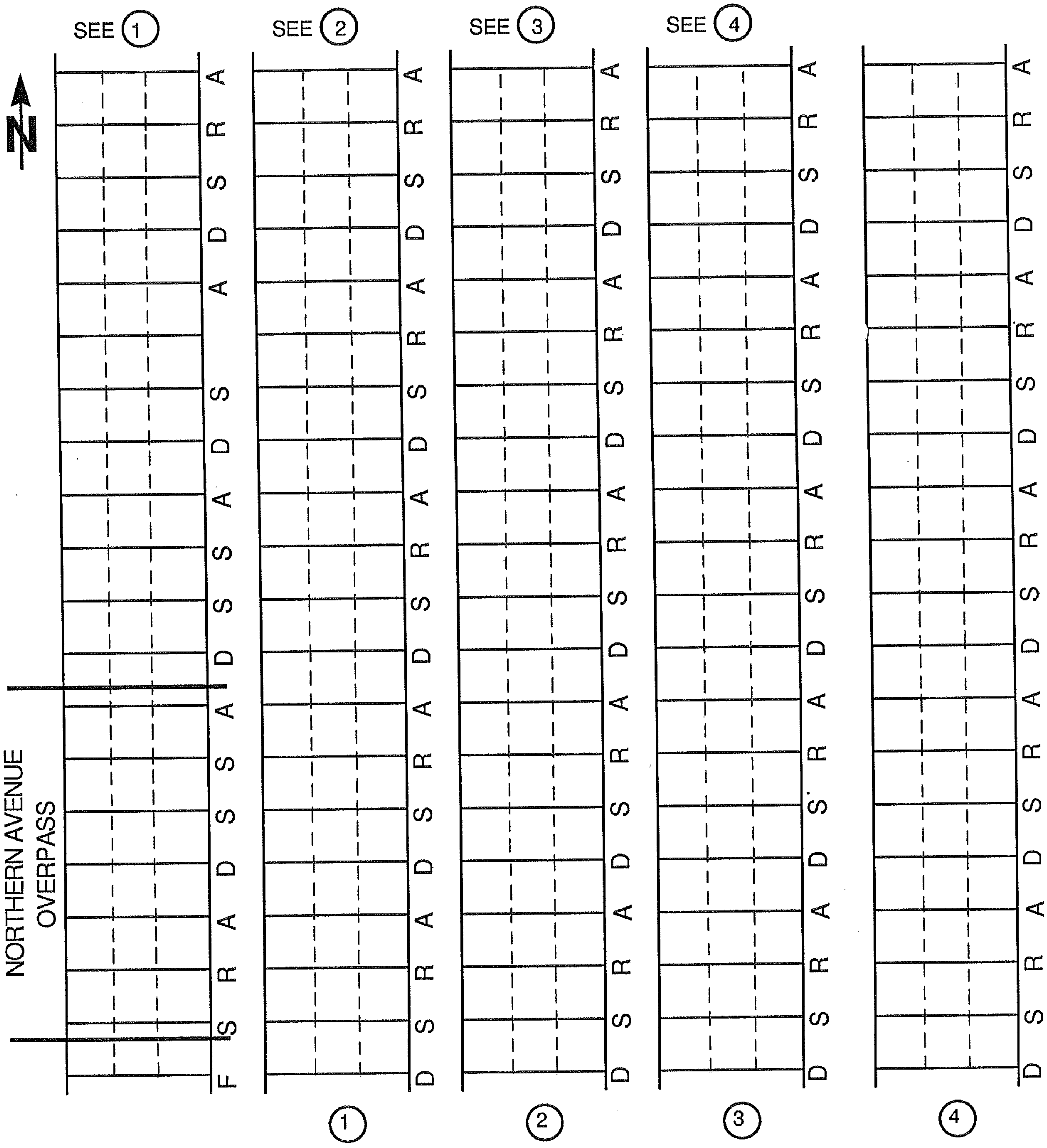

S-SUPERSEAL - 444
R-SAHUARO OVERFLEX-MS
A-ARCO ASPHALT RUBBER
D-DOW CORNING 888
F-ADOT MC250

FIGURE 3. - LOCATION OF TEST SEALANTS

material into the joint, a wooden form with a V notch cut in front was attached to the front end of the nozzle. A built-up section at the bottom of the form forced and smoothed the silicone rubber to the desired depth in the joint. This built-up section was a 1/4" x 1/2" key which fit exactly into the joint. Twenty-four joints were placed in three hours. The most time consuming part of the operation was changing the five gallon containers of silicone rubber on the pump. About 0.75 gallons of sealant were used per joint. The air temperature at the time of installation was 70°F.

There were several locations where the saw cut was too shallow and the backer rod shoved the sealant back up to the surface.

2. **Superseal 444**

The Superseal 444 was placed by a subcontractor under the supervision of the manufacturer's representative. Prior to sealant placement, an upholstery-cord backer rod was placed in the joints (Figure 5). The sealant was heated in a double-boiler melter-kettle (Figure 10) to above 275°F. The hose, wand, and nozzle used to place the material was similar to that used in the Dow 888 placement. The sealant flowed quickly into the joints with no apparent problems. The temperature of the sealer was 290°F and the air temperature at the time of placement was 90°F.

3. **Overflex-MS2**

The equipment used to install the Overflex-MS2 was the same as that used to install Superseal 444. A rubberized asphalt blend of AR-2000 asphalt and TPO-44 was blended and allowed to react in a double-boiler melter-kettle on site. The sealer was placed by the subcontractor at a temperature of 375°F. The air temperature at the time of placement was 85°F. A typical cross section of the joint is shown in Figure 6.

4. **ARCO Asphalt Rubber**

The manufacturer placed their own plant blended rubberized asphalt. The first ten joints were placed using a 1" placer nozzle which produced an occasional overfilled or underfilled joint. After the tenth joint, a smaller nozzle was used which produced better results. The equipment used was similar to that used to install the Superseal 444 joint sealer. The material was placed at temperatures varying from 350°F to 395°F. The air temperature at the time of installation was 90°F. An upholstery cord was used to prevent the sealant from seeping into the lower recess of the joint (Figure 7).

5. **Asphalt Rubber (ADOT)**

A single joint at the south end of the project was filled with a blend of MC 250 asphalt and TPO 165 rubber by State Personnel.

6. **General Comments**

The installation of the Superseal 444 was the fastest and neatest operation. The material flowed easily and set up quickly. While the installation procedure used by the silicone manufacturer was good, the efficiency could be improved by using larger sealant containers. The time to install the product would be reduced further if all the equipment were mounted on a truck and only the wand would have to be moved across the pavement. In the case of asphalt rubber, the advantages of less reaction time at the site and better quality as a result of proper blending and reacting of the asphalt rubber would justify the higher initial cost of a prepacked product.

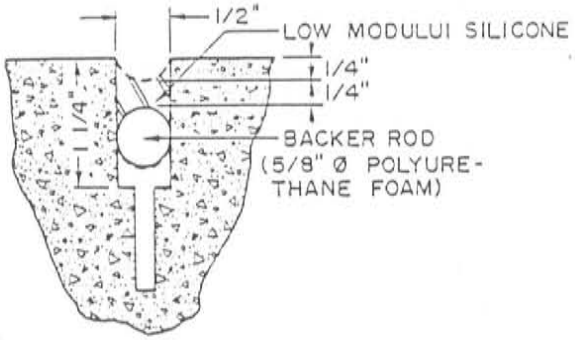

FIGURE 4 - DOW 888 JOINT

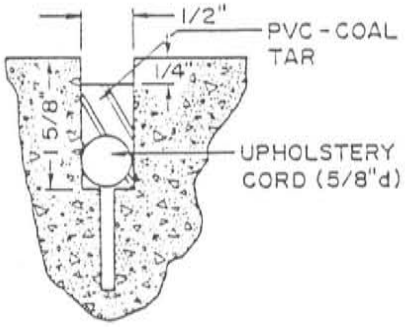

FIGURE 5 - SUPERSEAL JOINT

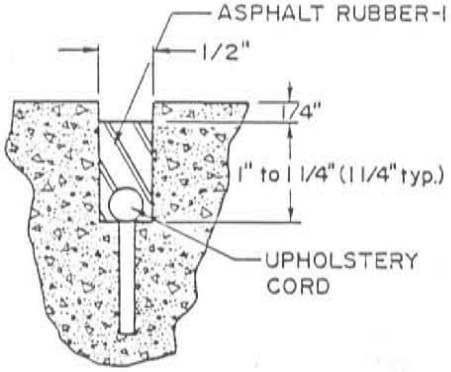

FIGURE 6 - OVERFLEX JOINT

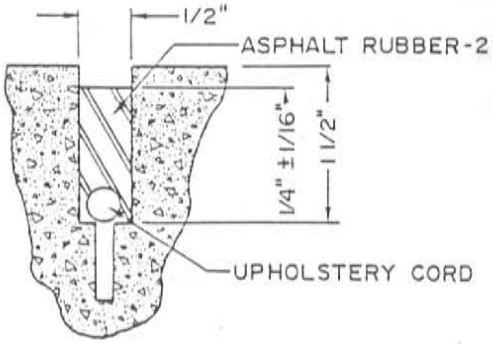

FIGURE 7 - ARCO JOINT

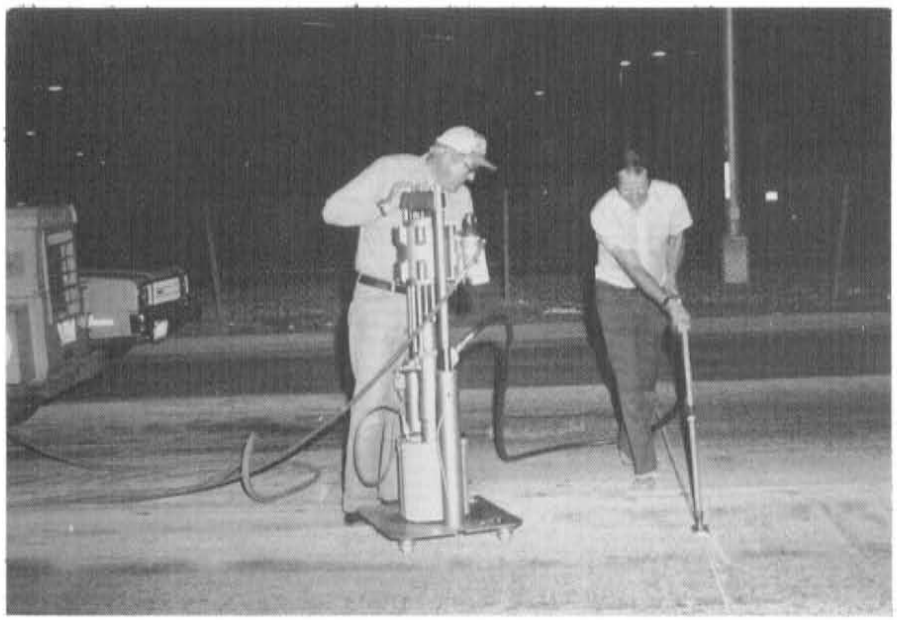

FIGURE 8. - PLACING DOW CORNING 888

FIGURE 9. - PLACING DOW CORNING 888

FIGURE 10 - PLACING SUPERSEAL 444

E. Performance

After sealer installation was completed, field surveys were conducted periodically to evaluate the performance of the sealants. The test sealants were carefully inspected for appearance, hardness of the material, embedment of incompressibles, presence of debris in the joint, bond, pull-out and percentage of joint sealed.

1. **Dow Corning 888**

   The performance of the 24 joints sealed with Dow 888 has been good. The sealant set up quickly to a tack free states, remained firm and resilient, and appeared to be unaffected by temperature variations. There has been no embedment of incompressibles to date. When surveyed in February 1982 (approximately two and one-half years after installation), all of the 24 joints were in excellent condition. In the survey conducted in June 1984, seven joints were noticed in which the sealant was too high and had pulled away from the joint wall. In each case the torn length occurred in the wheel path and was less than ten percent of the length of the joint. Heavy infiltration of sand and larger incompressibles was noted in these area. Additionally, a few other areas were noted in which the sealant was flush with the pavement surface. However, apart from these small areas, the sealant is well bonded to the sides of the joint walls. In order to test the ability of the sealant to bond to the concrete a small transverse cut was made and the sealant was pulled out of the joint. Except in the poorly sealed areas the sealant failed in cohesion rather than adhesion. In 1987 a final evaluation was performed and the joints were in the same condition as the 1984 evaluation. Roughly 20 percent of the joints had small bond failures of 1' or less caused by the sealant being too high.

2. **Superseal 444**

   The appearance immediately after construction of the joints sealed with Superseal 444 was very good. However, after about one and one-half years of service, the sealant hardened, particularly at the top, and cracks were noticed in the top 1/8" of the joint seal. At the same time the bond between the sealant and the sides of the joint began to deteriorate in the top 1/8" of the seal. Debris had also collected in most of the joints and the survey performed in February 1982, showed slight embedment of incompressibles in seven of the seals. Below the top 1/8" of the seal, the bond between the joint walls and the sealant is in good condition. At one joint, however, a four foot long pull-out occurred in October 1981. The ductility of the sealant is apparently influenced by temperature. The ambient temperature at the time of the survey was approximately 110°F, and during this survey it was noticed that the cracks formed in the sealant during the winter had closed due to the contraction of the joint and softening of the sealant. In March of 1987 it was noted that the top 1/4"-1/2" of the sealant was heavily weathered. There was a slight problem with incompressibles and the joint was not sealed on the surface.

3. **Overflex-MS2**

   The Overflex-MS2 set up quickly. The day after installation the surface was found to be firm, resilient, well bonded to the side walls and capable of rejecting incompressible material pressed into it. However, debris collected easily in these joints and as early as May 1980, embedment of incompressibles was noticed in almost all of the joints. In the survey conducted in March 1981 the embedment of incompressibles in the sealant had reached severe proportions (from 70% to 100% of the length of the joint). The sealant had also hardened, particularly where incompressibles were embedded. In the survey conducted in February 1982, it was noted that all of the joins

were brittle, however, no cracks were noticed and a good bond between the sealant and the joint walls was maintained. During the subsequent summer surveys, the sealant had softened considerably and continued to collect incompressibles (Figure 12). In March of 1987 the material was brittle and full of incompressibles.

4. **ARCO Asphalt Rubber**

Because of the difficulty involved in placing it, the ARCO asphalt rubber formulation had a bad appearance immediately after construction. Of the four major sealants installed, the ARCO sealant had the worst workmanship which resulted in a sloppy appearance. The distance between the top of the pavement and the top of the sealant was not uniform, and frequent high and low spots were noticed. The ARCO sealant remained soft longer than the Overflex-MS2 formulation, but by February 1982, the tendency to harden became more pronounced and the sealant in two of the joints became brittle and had started to crack. One of the major problems noted during the survey conducted in February 1982, was the loss of bond between the seal and the joint walls. Of the 25 ARCO joints placed in the test section, only three were well bonded to the side walls. In the remaining 22 seals, the percentage of length of seal bonded to the joint walls ranged from 50% to 98%.

In May of 1984 it was noted that the ARCO sealant had softened considerably and was not able to reject small stones pressed into it by hand. The ARCO formulation became much softer than the Overflex-MS2 formulation during the summer, and as a result the incompressibles worked their way deeper into the seal. As a result of the penetration of incompressible materials, slab expansion and consequent decrease of joint width, softening of the sealant, and overfilling of the joint, the sealer overflowed the joint and has continued to track onto the pavement. The final evaluation in 1987 revealed that the material was embedded with incompressibles.

5. **Asphalt Rubber (ADOT)**

During the first survey, performed three days after the installation of the sealant, it was noted that the sealant had not set up and that it was possible to penetrate a finger through the sealant. Four and one-half months later, the material still had not set and many incompressibles were embedded in it (Figure 13). The sealant was hard and brittle in places where incompressibles were embedded and soft and sticky in other places. The sealant was well bonded to the sides of the joint and prevented water from entering the joint. Apart form a cyclic loss of ductility during the winter and softening during the summer, the performance of the sealant remained unchanged. The final evaluation in 1987 revealed that the material was embedded with incompressibles.

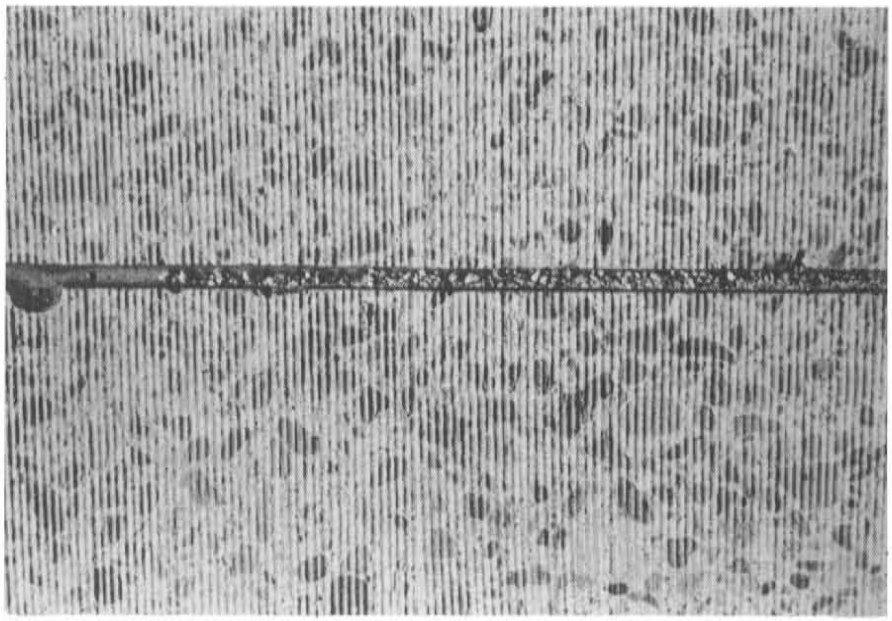

FIGURE 11. - SUPERSEAL 444 JOINT WITH DEBRIS ON TOP

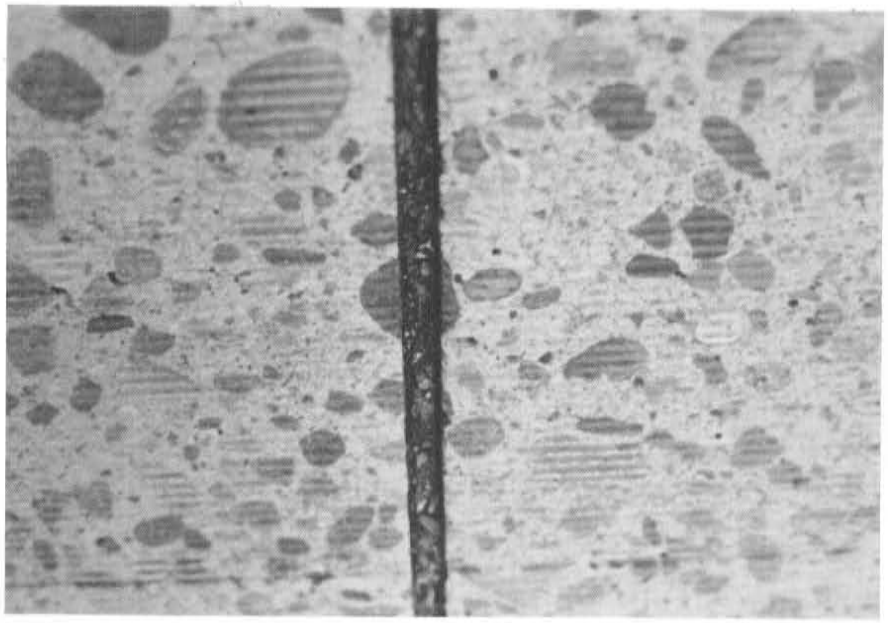

FIGURE 12. - INCOMPRESSIBLES EMBEDDED IN OVERFLEX-MS2

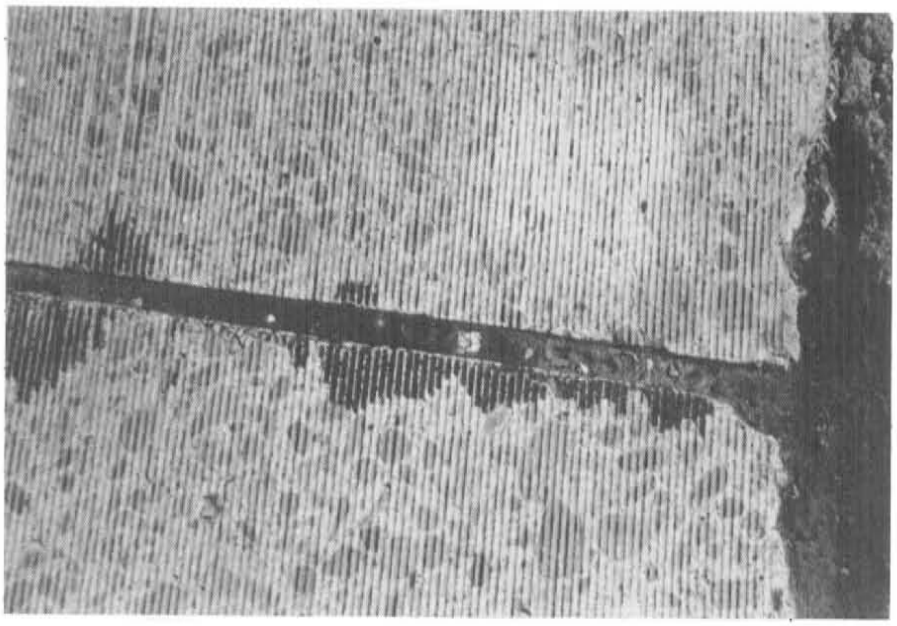

FIGURE 13. - ADOT'S JOINT SEALANT

III. SR360 SUPERSTITION FREEWAY PROJECT

A. Project Background

Subsequent to the 1979 test section, several other manufacturers expressed a desire in taking part in a second experimental project to evaluate their products. One of the products to be evaluated was another low modulus silicone sealant with a primer. Also included in the study were two polyurethane products. A PVC coal tar product was placed as a control. This work was done on a new construction project in the fall of 1982.

TABLE 3. - SUMMARY OF SEALANTS TESTED(SR 360)

Material Type	Number of Joints
General Electric Silicone	25
G. E. Silicone (experimental)	2
THC-900	7
Kitimine	16
Superseal 444	25

B. Description of Material

1. **General Electric Silicone**

   General Electric SCS4403 joint sealant is a one-component, cold poured, low modulus silicone formulation that cures on exposure to atmospheric moisture to form a flexible seal. The properties of this silicone material are similar to those of the silicone material used on the I-17 project except that a primer is used to improve the bond between the sealant and the joint. An experimental release agent, intended to reduce the cost, was also tested.

2. **Tremco THC-900**

   THC-900 is a three-part sealant that requires careful mixing prior to use, it also requires two primer applications. It is applied as a one-component, cold poured, self-leveling product. This material requires thorough cleaning of the joint, and is not resistant to harsh chemicals or continual water submersion.

3. **Tremco Kitimine**

   Kitimine is a reactive oligerimic, low modulus, one-component, moisture curing, polyurethane joint sealant. The joints require conditioning with a cleaner prior to sealant placement.

4. **Superseal 444**

   Superseal 444 is a one-component, hot-poured joint sealant. It is a blend of polyvinylchloride and coal tar and is supplied as a liquid which is heated to approximately 275°F prior to application. The sealant is placed in joints to a depth of 1" below the pavement over an upholstery cord. The final surface of the sealant elevation is 1/4" below the pavement surface.

C. Project Description

1. Location of the Project

The experimental project was initiated in October, 1982 and is located on both the eastbound and westbound lanes of the Superstition Freeway between Gilbert Road and Lindsey Road in Mesa, Arizona. The sealants were placed as part of construction project F028-1-506. The climatic conditions in Mesa are the same as those in Phoenix. The 1983 ADT was 28,000 and the 1986 ADT was 32,000.

2. Description of Test Section

The mainline pavement is a 38' wide, 9" thick, plain, portland cement concrete pavement. In order to improve drainage, the pavement was constructed with a 2% grade. Both longitudinal and transverse joints are sawed. The transverse joints are skewed and spaced at uneven intervals of 13', 15', and 17'. The joint geometry for both the silicone and polyurethane joints were 1/2" wide by 3/8" thick and are shown in Figure 14. The geometry for the Superseal 444 joints was the same as that used in the I-17 project. The location of the different sealants is shown in Figure 15.

D. Construction

Before installation of the joint sealants, the joints were sawed, sand blasted, and blown clean. A two blade concrete saw was used to saw the joints 1-1/2" deep by 1/2" wide. It was the manufacturer's responsibility to place the experimental sealants.

1. General Electric Silicone

A 5/8" polyurethane backer rod was placed and a primer was sprayed on the joint faces. The sealant was handled and placed the same as the I-17 silicone sealant. The experimental and conventional material were placed using the same procedures.

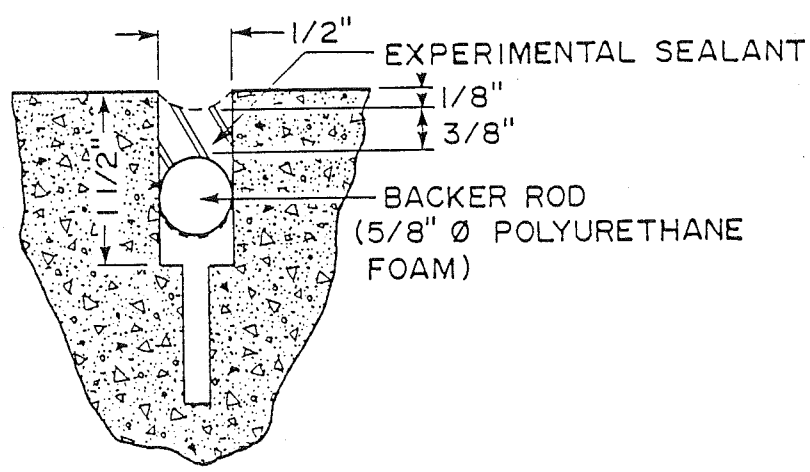

FIGURE 14. - TYPICAL EXPERIMENTAL JOINT

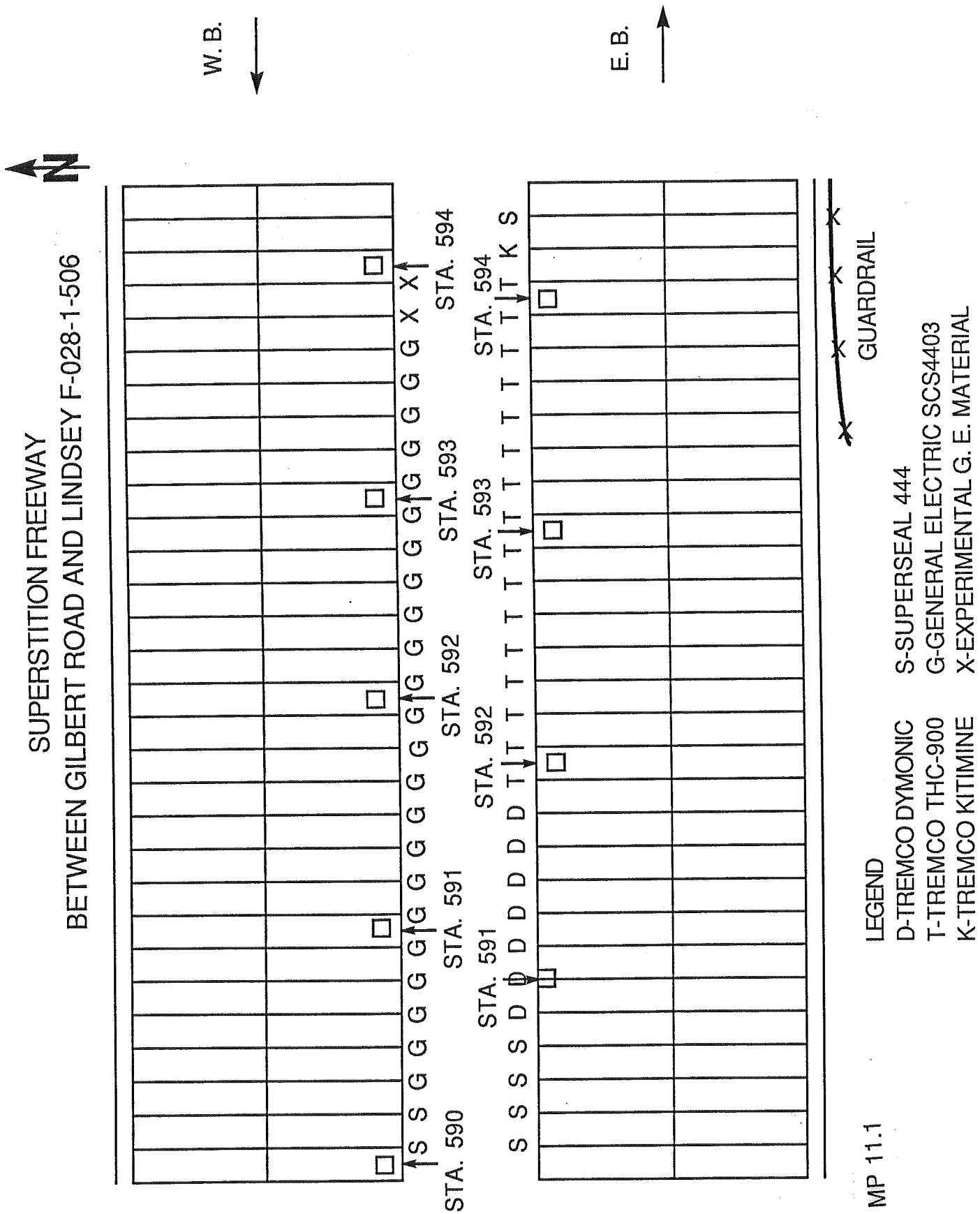

FIGURE 15 - LOCATION OF SEALANTS

2. **THC-900**

The backer rod was placed and then the joint faces were cleaned and primed. The material was mixed in a barrel and then poured into the joint. The supplier also tried to use a gun to apply the material. Both methods were extremely time consuming. Before any consideration can be given to this product, an improved delivery system must be developed.

One joint with a one-part cold applied sealant produced by the same company was also placed. This product was difficult to place and it was decided that no further joints would be sealed with the material.

3. **Kitimine**

Preparation of the joints was similar to the THC-900; however, the application was different. The product was supplied in tubes and did not need to be mixed prior to placing. The material was applied by hand using caulking guns. After applying the supplier tooled the sealant to get a smooth surface below the top of the joint.

4. **Superseal 444**

This product was placed in the same manner as on the I-17 project.

5. **General Comments**

As in the I-17 project, the placing of the Superseal 444 joint sealant was the most efficient. This was due to the familiarity the contractor had with the product since it was being used on the construction project. The G. E. Silicone sealant operation also ran smoothly and it appears that this operation would also be efficient on a large scale. The placement of the polyurethanes was not efficient and an improved delivery system is needed before this product can be considered for routine construction.

E. Performance

After sealer installation was completed, field surveys were conducted semi-annually to evaluate the performance of the sealants. The test sealants were carefully inspected for appearance, hardness of the material, embedment of incompressibles, presence of debris in the joints, bond, and percentage of joint sealed.

1. **General Electric Silicone**

Immediately following construction the G. E. Silicone sealant looked good. It was easy to place and produced a neat joint. In 1985 the product was still performing well. The joints were sealed and the material was resilient. In 1987 it was noted that nine of the joints had bond failure along portions of the joint. Where it was not bonded the sealant was black and at the rest of the joint it was brown. Further inspection revealed that the sealant had failed where it had not been properly tooled. The material was too high and traffic had caused the material to debond. At the locations were the sealant was tooled below the surface the sealant was performing well.

There was no noticeable difference between the experimental primer and the regular material.

FIGURE 16 - PRIMING JOINTS

FIGURE 17. - PLACING POLYURETHANE

FIGURE 18- PLACING G. E. SILICONE

2. **THC-900**

The THC-900 sealant was difficult to place and has not performed well. The application methods used by the supplier were time consuming. In the 1984 and 1985 evaluations the sealant seemed to be performing well but in 1987 it was noted that 3 of the 16 joints had bond failures and in some of the joints the material tracked onto the surface of the pavement.

3. **Kitimine**

The Kitimine, like the other polyurethane, has not performed well. In 1984 it was noted that the material was debonding from the joint. During the 1987 evaluation it was found that 6 out of 7 joints had bond failures.

4. **Superseal 444**

The construction of the Superseal 444 joints went well and during the first two years of service the sealant looked good. Since that time the material has badly weathered. The surface is cracked, dried out, and no longer bonded to the concrete. A visual inspection in 1987 revealed that the top 1/4"-3/8" of the sealant was not bonded to the concrete.

IV. SUMMARY AND CONCLUSIONS

Five joint sealants were placed under controlled conditions on the Black Canyon Freeway in Phoenix during June 1979. This experimental section revealed that there were problems with each of the sealants tested. Some of the problems were due to placement while others were due to the performance of the material.

The hot-poured asphalt rubber appeared to deteriorate rapidly, as indicated by their surface appearance and their inability to reject incompressible materials . After one year of service, the asphalt rubber sealants cyclically became hard and brittle during the winter and soft and ductile during the summer. Consequently, the adhesion between the asphalt rubber joint sealant and the joint walls decreased in the winter and incompressibles penetrated the sealant in the summer. All three asphalt rubber sealants allowed incompressibles to enter the joint and were only marginally effective in sealing the joint.

The PVC coal-tar initially performed well but was not able to resist weathering. The sealant was easy to place and performed well for a period of time. After one and a half years the top 1/8" of the sealant became brittle and cracked. It also debonded from the concrete in the upper portion of the seal. The cracking allowed a small percentage of incompressibles to enter the joint and the debonding produced a joint with less than ideal sealing properties.

The low modulus silicone sealant performed well with the exception of some joints which were placed too close to the surface. The product was easy to handle and install; however, there was a problem with the joints not being sawed deep enough. At these locations the sealant was too thin and too close to the surface. In the areas where the sealant was properly placed it performed well. The silicone sealant did not allow any incompressibles in the joint and maintained an effective seal.

Four joint sealants were placed under controlled conditions on the Superstition Freeway in Mesa during October 1982. After evaluating for five years, similar conclusions were reached on this project as on the Black Canyon Project. As in the earlier test section there were problems with all of the sealants tested.

Both of the polyurethane products had problems with installation and performance. The methods used to install the sealants were very time consuming and did not produce a satisfactory product. One of the two materials failed within a year and a half. The second material appeared to perform well for about four to five years but was sloppy and difficult to place. Because of the placement problems there is no way to determine if polyurethanes are effective as a concrete joint sealant. A better installation method will need to be devised before these products can be effectively used as a sealant.

The PVC coal tar placed on the second project did not perform satisfactorily. The performance on this project was similar to that of the previous project. The primary problem was excessive weathering in the upper portion of the seal. The sealant was heavily cracked and had dried out.

The problem with improper installation of a silicone sealant was even more evident on the second project. The sealant failed at every location where the material had not been tooled below the surface of the joint while at the locations where it had been it was sealed and performing well.

Based on these two test sections it was found that if a silicone sealant is placed properly it will perform better than the PVC coal tar, asphalt rubber, and polyurethane products that were tested. After seven years of service the silicone sealant still resists penetration of incompressibles, maintains a tight seal, and resists deterioration. The PVC coal tar product performed well initially but was not effective in resisting weathering. The asphalt rubber products were ineffective in resisting incompressibles after only one year of service. The installation methods utilized on the polyurethane products were unacceptable and until a better method is developed the material is not practical for construction projects.

If silicone sealants are used in the future it is recommended that care be taken in assuring that the sealant is properly tooled below the surface and is placed to the proper depth. More precise specifications and more stringent quality assurance should be implemented to assist in this area.

REFERENCES

1. Thornton, J. B., Gulden, W., "Pavement Restoration Measures to Precede Joint Resealing", Transportation Research Record #752, 1980, pp. 6-15.

2. Tons, Egons, "A Theoretical Approach to Design of a Road Joint Seal", Highway Research Board Bulletin #229, 1959, pp. 20-44.

3. Cook, J. P., Lewis, R. M., "Evaluation of Pavement Joint and Crack Sealing Materials and Practices", NCHRP Report #38, 1967.

4. "Joint Seal Design", Research Report RR60-3 New York State Department of Public Works Bureau of Physical Research, November, 1960.

5. Hiss, J. G. F., and Brewster, D. R., "The Influence of Joint Width and Spacings on Pavement Riding Qualities", Research Report #68-F, New York State Department of Public Works Bureau of Physical Research, July, 1968.

6. Burt III, W. T., Azar, D. G., Myers J. C., "Evaluation of Joint Seal Materials - Interim Report #1", Research Report #62, Louisiana Department of Highways, March, 1982.

7. "Design, Construction, and Maintenance of PCC Pavement Joints", NCHRP Synthesis of Highway Practice #19, Highway Research Board, 1973.

8. Ray, G. K., "Effect of Defective Joint Seals on Pavement Performance", presented at 59th Annual Meeting, Transportation Research Board, 1980.

9. Smith, P. R., "Joint Sealing/Resealing in Portland Cement Concrete Pavements", presented at the 1977 Fall Annual Meeting, American Concrete Institute, 1977.

10. Gaus, F. D., "Mandatory Criteria for Maximum Performance, Zero Maintenance, Warranted Joint Sealing and Resealing of PCC Pavements", presented at 63rd Annual Meeting, Transportation Research Board, 1984.

11. Spells, S., Klosowski, J. M., "The Importance of Sealant Modulus to Performance of Concrete Highway Joint Sealants Under Vertical Shear", presented at 64th Annual Meeting, Transportation Research Board, 1985.

Information about Silicone Sealants

DOW CORNING

DESCRIPTION

Dow Corning® 888 highway joint sealant is a one-part silicone material that readily extrudes over a wide temperature range and cures to produce a durable and flexible, low-modulus silicone rubber highway joint seal. Because of its low modulus characteristics and good extension/compression recovery of up to ±50% of original joint width, Dow Corning 888 highway joint sealant gives outstanding performance in highway joints where extreme movement occurs. Dow Corning 888 highway joint sealant features:

- Ease of application — one-part, ready to use as supplied; no mixing required. Can be dispensed from bulk containers using equipment such as air-operated guns.
- All-temperature gunnability — consistency is relatively unchanged from -35 to 140 F (-32 to 60 C) eliminating the need for heating or cooling.
- Unprimed adhesion — primer is not required for bonding to concrete and asphalt provided the surface is clean, dry and frost-free.
- Seals irregular surfaces — can be used to seal joints where spalls have occurred, provided adequate contact is made between the sealant and substrate.
- Low modulus — controlled compression/extension recovery of up to ±50 percent of original joint width without affecting adhesion. The movement of pavement due to temperature extremes before sealant completely cures will not affect development of an effective joint seal. Also, movement of highway joints caused by

DOW CORNING® 888 HIGHWAY JOINT SEALANT

Type	One-part silicone rubber
Cure	Cures at room temperature by reaction with moisture in the air
Special Properties	Easy to use; bonds to most materials without use of primer; low modulus; good recovery from extension/compression
Primary Uses	Sealing most highway joints, especially those exposed to extreme movement

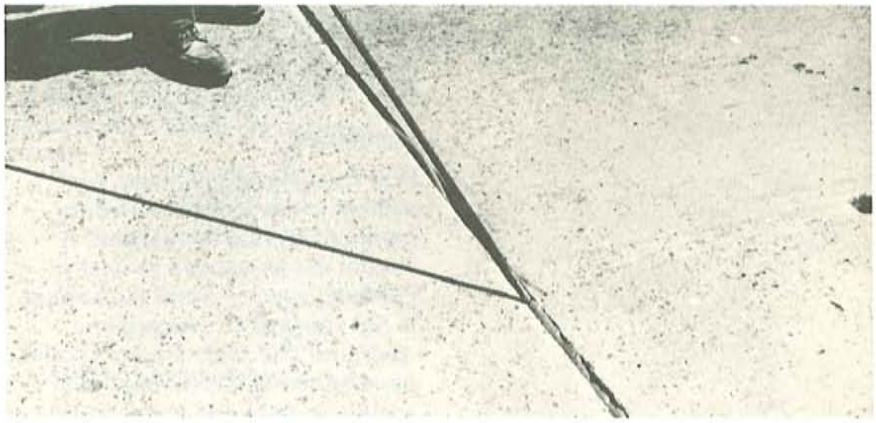

BL8099-1

TYPICAL PROPERTIES

These values are not intended for use in preparing specifications.

As Supplied

Color	Gray
Flow, sag or slump	Nil
Working Time, minutes	10
Tack-Free Time, at 77 F (25 C), hours	1
Cure Time, at 77 F (25 C), days	7-14
Full Adhesion, days	14-21

As Cured — after 7 days at 77 F (25 C) and 50% RH

Elongation, percent	1200
Durometer Hardness, Shore A, points	15
Joint Movement Capability, percent	±50
Tensile Strength, maximum elongation, psi	100
Peel Strength, ppi	25

Specification Writers: Please contact Dow Corning Corporation, Midland, Michigan, before writing specifications on this product.

temperature, traffic, and faulting require a sealant that does not strongly resist stress and shear.

- Non-shrink — sealant will not shrink upon curing.
- Good weatherability — virtually unaffected by sunlight, rain, snow, ozone, or temperature extremes.
- Long life reliability — cured sealant stays rubbery from -80 to 300 F (-56 to 149 C) without tearing, cracking, or becoming brittle under normal conditions.
- Compliance with Federal Specifications TT-S-001543A (1 part silicone sealants) and TT-S-00230C (one-component sealants), and Canadian Specification 19GP9M.

USES

Dow Corning 888 highway joint sealant is especially effective for sealing transverse expansion and contraction joints, for longitudinal and shoulder joints, and as a remedial sealant for joints in which other materials have failed because of excessive movement or poor weatherability.

Limitations

Dow Corning 888 highway joint sealant is not recommended for continuous water immersion. It should not be applied in totally confined spaces where the sealant is not exposed to atmospheric moisture. The sealant bead should be recessed below the highway surface to minimize abrasion from traffic and snow removal equipment.

HOW TO USE

Low modulus Dow Corning 888 highway joint sealant easily withstands extreme joint movement when properly applied.

A thin bead of silicone sealant will accommodate more movement than a thick bead. Dow Corning 888 highway joint sealant should be no thicker than ½-inch (12.7mm) and no thinner than ¼-inch (6.4mm). Recommended sealant width to depth ratio is 2:1.

When using Dow Corning 888 highway joint sealant, the following procedure is recommended:

1. Clean all joints of contaminants and impurities to the depth at which the sealant and backer rod are to be installed, by grinding, saw cutting, blast cleaning (sand or water), mechanical abrading or a combination of these methods to provide a sound, clean, and frost-free surface for sealant application. With existing joints use a sufficient blade width to remove any remaining old sealant.
2. Blow out dust, loose particles and other debris from joints with oil-free compressed air. Surfaces must be clean, dry, frost-free and dust-free.
3. Install polyurethane foam or expanded polyethylene foam rod back-up material in joints. These materials permit application of a thin bead and act as bond breakers which allow the silicone sealant to stretch freely with the joint movement. (Refer to the table entitled "Recommended Backer Rod Installation").
4. Apply Dow Corning 888 highway joint sealant in a continuous operation to properly fill and seal the joint width. For maximum performance the sealant should be applied above 40 F (4.4 C).
5. Using a blunt instrument, tool joint so that it is slightly concave and approximately ⅛" below the roadway surface. Tooling should be done before a "skin" forms, usually within 10 minutes of application. Do not use soap or oil as a tooling aid.

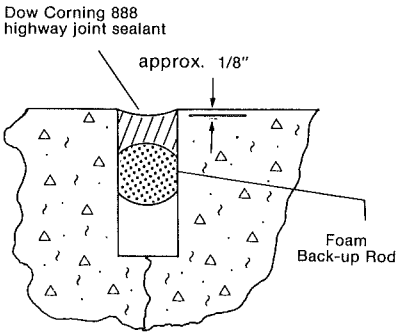

6. Excess sealant may be cleaned off tools and equipment while in uncured state with a commercial solvent such as xylol.
7. Keep traffic off sealed lane for three hours.

CAUTION

On direct contact, uncured Dow Corning 888 highway joint sealant may cause skin irritation. Avoid prolonged or repeated skin contact.

RECOMMENDED BACKER ROD INSTALLATION

Joint Width	Backer Rod Diameter
5/16"	3/8"
3/8"	1/2"
1/2"	5/8"
3/4"	7/8"
1"	1 1/8"

SHIPPING LIMITATIONS

None.

STORAGE AND SHELF LIFE

When stored in original unopened containers at or below 90 F (32 C), Dow Corning 888 highway joint sealant has a shelf life of 6 months from date of shipment. Keep containers tightly closed.

PACKAGING

Dow Corning 888 highway joint sealant is available in 4.5-gal (17-lit) bulk pails, and 40-gal (151.4-lit) bulk drums.

USERS PLEASE READ

The information and data contained herein are believed to be accurate and reliable; however, it is the user's responsibility to determine suitability of use. Since Dow Corning cannot know all of the uses to which its products may be put or the conditions of use, it makes no warranties concerning the fitness or suitability of its products for a particular use or purpose.

ESTIMATING REQUIREMENTS

Linear feet per gallon of Dow Corning 888 highway joint sealant for various joint widths.

Joint Width, inches	*Joint Depth, inches*	*Linear Feet/Gallon*
1/4"	1/4"	308
5/16"	1/4"	246
3/8"	1/4"	205
1/2"	1/4"	154
5/8"	5/16"	98
3/4"	3/8"	68
7/8"	7/16"	50
1"	1/2"	38
1½"	1/2"	25

You should thoroughly test any proposed use of our products and independently conclude satisfactory performance in your application. Likewise, if the manner in which our products are used requires governmental approval or clearance, you must obtain it.

Dow Corning warrants only that its products will meet its specifications. There is no warranty of merchantability of fitness for use, nor any other express or implied warranties. The user's exclusive remedy and Dow Corning's sole liability is limited to refund of the purchase price or replacement of any product shown to be otherwise than as warranted. Dow Corning will not be liable for incidental or consequential damages of any kind.

Suggestions of uses should not be taken as inducements to infringe any patents.

The information and data contained herein are based on information we believe reliable. You should thoroughly test any application, and independently conclude satisfactory performance before commercialization. Suggestions of uses should not be taken as inducements to infringe any particular patent.

DOW CORNING CORPORATION, MIDLAND, MICHIGAN 48640

Atlanta Boston Brussels Chicago Cleveland Dallas Detroit Greensboro
Los Angeles New York San Francisco Sydney Tokyo Toronto

DOW CORNING

DOW CORNING

"Dow Corning" is a registered trademark of Dow Corning Corporation.

Printed in U.S.A.

Form No. 61-408-78

SUPERSEAL-444 Joint Sealant- Highway and Runway Type

SPECIFICATION: Sealing Compound, Elastomeric, Polymer Type, Hot Applied, One Component, Highly Resistant to Weathering, For Portland Cement Concrete Pavements

Joint sealing materials shall be hot applied, SUPERSEAL 444 as manufactured by the Superior Products Company Inc., 833 47th Avenue, Oakland, Calif., and shall conform to ASTM D3406-75T as follows:

TEST	REQUIREMENT
Preparation of Sample:	
(Heating Time—Pouring Temperature)	6 hours at Safe Heating Temperature
Penetration:	1.30 cm max.
Flow:	
72 hours at 158 degrees F.	No flow
Bond:	1/4" separation, average
Resilience:	
48 hours, room temperature	60% min.
24 hours, oven aging at 158 degrees F.	60% min.
Artificial Weathering Test:	The joint sealant shall not flow, show tackiness, presence of an oil-like film or reversion to a mastic-like substance, formation of surface blisters either intact or broken, form internal voids, surface crazing or cracking, or hardening or loss of resilient, rubber-like properties. Evidence of physical change in the surface of the material by visual and tactile examination shall constitute failure of this test.
Oven-aged on tin panel, 72 hours @ 158°F	No crazing or cracking when panel is bent to 90° over a 1/4" diameter mandrel

Recommended Joint Size

SINGLE SAW CUT

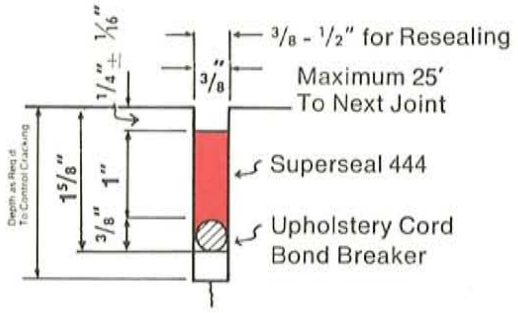

DOUBLE SAW CUT WITH ROPE

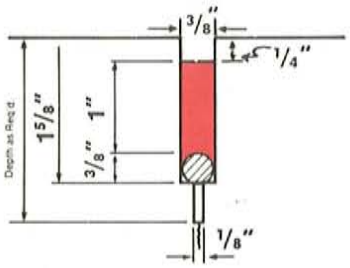

DOUBLE SAW CUT WITH TAPE

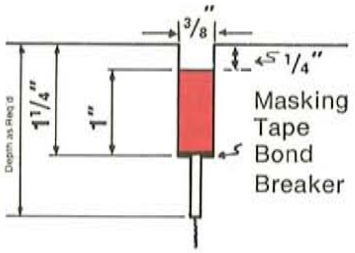

★★★ EXCLUSIVE WARRANTY: TEN YEARS

Superseal sealant shall prevent infiltration of water and/or foreign material through the joint under normal usage, shall not flow, have loss of bond or cohesive failure, blister, bubble, or crack, or lose resilient rubber-like properties.

SUPERSEAL-444 hot-applied joint sealant is warranted on the basis that the subject contract specifications for the joint preparation and cleaning of the joints are strictly adhered to by the contractor, all foreign material to be completely removed by sandblasting or waterblasting prior to application of the sealant in the joint and provided that the joints are sealed between 1/4" ± 1/16" below flush with the pavement surface.

SUPERIOR PRODUCTS COMPANY, INC.
445 Coney Island Drive South, Sparks, Nevada 89431 (702) 358-7870

Joint Sealant-Highway and Runway Type SUPERSEAL-444

Single Component Hot-Poured Elastomeric Polymer, Highly Resistant to Weathering, for Sealing of Concrete Joints in Highways, Airfield Pavements and Commercial Buildings

ASTM Designation: D3406-75T—Tentative Specifications For JOINT SEALER, HOT-POURED, ELASTOMERIC TYPE, FOR PORTLAND CEMENT CONCRETE PAVEMENTS

EXCEEDS Federal Specifications SS-S-164, SS-S-1401A, and SS-S-195B

Exclusive Features

- Highly resistant to weathering; will not flow, blister or bubble, maintains resilient rubber-like properties
- Highly resilient to reject incompressibles
- Quickly and easily applied; liquid during all phases of handling prior to application
- Proven satisfactory field performance for more than 10 years
- Exclusive ten year warranty

Description:

Superseal-444 a unique field-proven polymer type, hot-poured, elastomeric sealant offers a combination of ease of application and outstanding service performance.

It is supplied as a liquid (5 gallon pails) which is heated to approximately 250 degrees F. prior to application into the joint. After application and cooling, it forms a resilient, tough and well bonded seal for exclusion of all types of foreign material.

Being initially liquid, Superseal-444 is much easier to handle than the solid hot-poured types. Production and efficiency can be increased. At application temperature it is very fluid. Being self-leveling, it produces uniform and neat appearing sealed joints.

Joint Preparation:

Joints must be clean and dry. Because Superseal-444 is very fluid at the pouring temperature, use of upholstery cord or masking tape may be required at the bottom of the joint.

Cleaning of Joints:

New concrete pavement: All joints should be formed or sawed to produce a minimum joint size of $^3/_8$" x $1^5/_8$", at 25 lineal feet average joint spacing. Prior to sealing the joint, surfaces should be cleaned of all dirt, curing compound residue, laitance and any other foreign material. Clean thoroughly by sandblasting or jet waterblasting. Immediately prior to sealing, joints should be blown using a minimum of 100 PSI compressed air.

Old concrete pavement: For resealing of joints, the old sealant in the joint should be plowed out and the joint widened to $^1/_2$" x $1^5/_8$", using a concrete saw. Joints should be cleaned of all old sealant. Remove all foreign material by thoroughly sandblasting or jet waterblasting. Immediately prior to sealing, joints should be blown using a minimum of 100 PSI of compressed air.

Application:

Superseal-444 comes "ready to use" in liquid form, and is poured into manufacturer's approved double-boiler type of melter-application kettle or extruder and then heated to the recommended application temperature. Joints should be filled from the bottom of the $1^1/_4$" deep joint to $^1/_4$" below flush, $\pm^1/_{16}$". Refer to: Superior Applicator Bulletin #1 and Superior Application Bulletin #2.

Storage of Compound:

The sealing compounds should not be exposed to ambient temperatures in excess of 100 degrees F., whether open or indoor storage. Indoor storage is recommended. Do not store in direct sunlight.

SUPERIOR PRODUCTS COMPANY, INC.
445 Coney Island Drive South, Sparks, Nevada 89431 (702) 358-7870

CRAFCO INC.

P.O. Box 20133 PHOENIX, ARIZONA 85036 602/894-1233

The directions for field use are as follows:

Remove box, place Overflex M. S. and Polyethylene bag into heater applicator. Using an indirect heating system (Double boiler type) heat material while agitating to a temperature of 350°. The Material is ready to be used when a bead of M. S. is placed on the pavement and very little seperation of the rubber and asphalt occurs. Overflex M. S. may be added to the mix as long as a minimum temperature of 350° is maintained. Maximum heat recommended is 400°.

TREMCO

SPECIFICATION DATA

THC-900

Self-leveling expansion joint sealant

Designed to effectively resist moisture, abrasion and movement.

Composition: A hybrid, multi-component, chemically curing, self-leveling polyurethane joint sealant.

Basic Uses: Specifically developed for sealing concrete expansion and control joints in: parking garages, plaza and terrace decks, floor and sidewalk joints.

The THC-900 System exhibits tenacious adhesion which will not dissipate with time. This unique formulation which possesses a balanced adhesive strength, low modulus and high recovery, make it ideal to resist the adverse conditions common to horizontal joint installations: Moisture, Abrasion, Movement, Shear and Deflection at Expansion Joints.

LIMITATIONS:

- A three-part sealant requiring careful mixing prior to use.
- Must be used in conjunction with Tremco Primer #1on concrete surfaces. For joint interfaces other than concrete, consult your local Tremco Representative.
- Should not be used in joints subject to constant water submersion, such as swimming pools, reservoirs, sewage treatment basins.
- Not designed for areas subject to constant spillage of harsh chemicals, such as acids, alkalies, and organic solvents.

Packaging: THC-900 is packaged in bulk: 1½ gallons (5.68 liters) of sealant when mixed in a 2 gallon container.

Colors: Supplied in separate easy-to-open containers. One Multi-System Color-Pak (pigmented concentrate) mixes with one THC-900 Base unit. Benefits include excellent color uniformity, greater availability of standard and special colors, a lower inventory requirement, a visual index of proper mixing and easy, safe, handling procedures.

Standard Colors: Precast White, Off-White, Limestone, Beige, Buff, Redwood/Tan, Bronze, Aluminum/Stone, Black.

APPLICABLE STANDARDS:

Supplied in a self-leveling formulation meeting the requirements of U. S. Federal Specification TT-S-00227E, ASTM, and Tremco standards.

JOINT DESIGN

(a) Minimum size of joint should be four times the anticipated movement.

(b) Minimum joint width dimension is ⅜″ (9 mm),to allow for adequate cleaning and priming; depth of joint should not exceed width of joint from ⅜″ to ½″ (9 mm to 13 mm). For joints larger than ½″ x ½″ (13 mm x 13 mm), the depth of the sealant should be no more than ½″ to ⅝″ (13 mm to 16 mm).

(c) THC-900 has been used to successfully seal horizontal joints in sidewalks, parking and plaza decks up to 12″(30.5 cm) in width. Depending upon the amount of traffic and the anticipated abuse versus joint width, a cover and/or a support plate may be necessary.

(d) Consult with your local Tremco Representative for specific design details.

TECHNICAL DATA

Surface Preparation:

New Construction — The joint interface must be clean, dry, and free from loose mortar, and laitance. Depending upon the substrate, a thorough wire brushing, grinding or sand blasting may be required. The presence of form release agents, waterproofings, damp-proofings, or other contaminants, will require grinding or sandblasting to expose virgin concrete.

Remedial Applications — All previous sealants, mastics, or joint fillers should be removed by routing or saw-cutting. Joint faces should then be sandblasted or ground to expose clean, sound, virgin concrete.

Primer: After proper substrate preparation, concrete surfaces to receive

Performance Characteristics

Cured Sealant Properties	Test Method	Typical Value
Shore A Hardness:		
Standard Conditions	TT-S-00227E	25-30
After heat aging	TT-S-00227E	30-35
Artificial Weathering	ASTM G 23-75 Type D	No elastomeric property change after 1000 hours.
Bond-Cohesion after water immersion	TT-S-00227E	No failure between masonry blocks after 25% extension
Tensile Strength	ASTM D 412-75	232 psi
Ultimate Elongation	ASTM D 412-75	575%
Recovery	TT-S-00227E Durability specimens blocked at 25% extension for 48 hours	96%
Weight Loss	TT-S-00227E	0.9%
Tear Resistance	ASTM D 624-73	56 lbs/inch
Staining	TT-S-00227E	passes
Service Temperature	N/A	−40 to 180° F (−40° to 82.5°C)

THC-900 must be primed with two successive coats of Tremco Primer No. 1. Allow 15 minutes between coats. Caulk as soon as primer is tack free.

For severe moisture conditions, Tremco Primer No. 18 is required. For specific design criteria, consult your local Tremco Representative.

Mixing: The sealant must be thoroughly mixed in accordance with manufacturer's directions on container label, before application. Proper mixing is achieved with a slow speed, heavy-duty drill (maximum 425 rpm) for not less than 8 minutes, using a Dymeric two-part mixing paddle.

Pot Life: Approximately 1 to 2 hours at 75°F (24°C), depending on temperature. Higher temperatures will accelerate cure rate.

Initial Set: Approximately 10 hours at 75°F (24°C); 48 hours at 50°F (10°C).

JOINT BACKING - BONDBREAKER

Joints shall be backed with round closed-cell polyethylene, neoprene, or butyl rod under 30% compression. The sealant must not be applied against impregnated fiberboard, sand, or other absorbing type backup materials that retain moisture. These materials must be cut back deep enough to allow for proper joint backing.

Where joint design, or depth of joint will not permit the use of joint backing, a bondbreaker tape must be installed to prevent three-sided adhesion. An adhesive backed polyethylene tape should be used.

Application: THC-900 is supplied in a self-leveling consistency which will flow easily into joints with a caulking gun. Joints should be filled to within 1/16" (1.6 mm) of the surface. Proper width-to-depth ratios must be maintained.

Tooling: Where necessary, light tooling can be performed immediately after application.

Cleaning: Immediately remove all excess sealant smears adjacent to the joint with Xylol or Toluol, as work progresses. Cured sealant can be removed easily from unprimed concrete.

Storage Life: One year.

Precautions: Avoid inhalation of vapors and skin and eye contact. Contaminated clothing should be removed. May be harmful if swallowed; do not induce vomiting, call a physician immediately. Keep away from heat and open flame.

Typical THC-900 traffic joint with epoxy nosing.

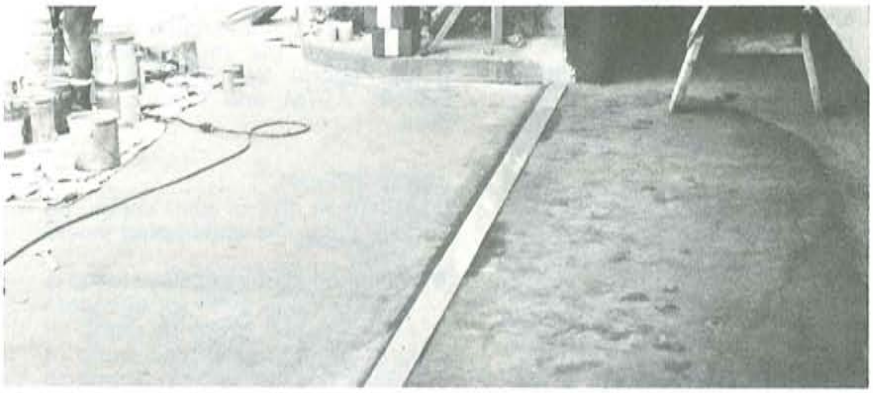

Availability: Immediately available from Tremco Distribution Centers strategically located throughout the United States and Canada.

Cost: Data is available from your local Tremco Representative or by calling our Customer Service Department. For his name and telephone number call Tremco in Cleveland: 800-321-7906; In Ohio: 216-464-7994 Collect.

GUARANTEE:

We warrant our products to be free of defects and manufactured to meet published physical properties when cured and tested according to ASTM and Tremco standards. Under this warranty, we will provide, at no charge, product in containers to replace any product proved to be defective when applied in accordance with our written instructions, and in applications recommended by us as suitable for this product.

All claims concerning product defects must be made within twelve (12) months of shipment. Absence of such claims in writing, during this period, will constitute a waiver of all claims with respect to such product.

This warranty is in lieu of any and all other warranties expressed or implied.

Maintenance: Your Tremco Representative can provide effective maintenance procedures to replace damaged sealant. Procedures will vary depending on the condition of the sealant and the joint.

TECHNICAL SERVICES:

Your local Tremco Representative, in conjunction with the Tremco Technical Services Department, provides blueprint analysis, problem analysis, and assistance in design and development for special applications. On-site instruction can generally be provided at no charge, with full-time inspection available on a fee basis. Their services are complemented and extended by the Tremco Research Center, which has earned the unique reputation in glazing, sealant, and waterproofing technology.

See Sweet's Architectural File, U. S.

TREMCO

10701 Shaker Blvd./Cleveland, Ohio 44104
TWX 810-427-2901

F-3116B Printed in U.S.A.

SILICONE

HIGHWAY JOINT SEALANT SCS 4403

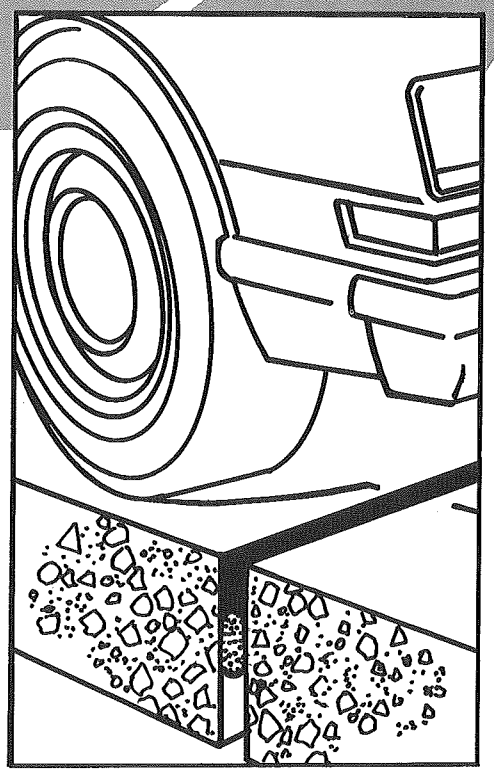

Performance Characteristics

Withstands moisture, high/low temperatures, UV attack	Anticipated long-term performance
Unique stress relaxation and low modulus characteristics over wide temperature range	Low stress on bond line thus assuring long-term adhesion characteristics
Easy tooling	Good substrate contact
Fast cure	Quick cure time, allows fast traffic resumption
Easy application over wide temperature range	Eliminates delays due to temperature extremes
One part – no mixing required	Simple dispensing equipment
High/low temperature flexibility	Does not lose rubber like properties from −65°F to +300°F

Performance Benefits

SCS 4403 is a one-part, low modulus, weather resistant sealant recommended for use in highway joint applications in conjunction with SCP 3165 primer.

EASY APPLICATION: SCS 4403 Sealant consistency remains virtually unchanged over a wide temperature range. It permits easy pumping and placement in the joint and eliminates the need to heat or cool the sealant. As a result, delays due to temperature extremes are reduced.

EASY TOOLING – FAST CURE:
After application, SCS 4403 Sealant is easy to tool, has good contact with joint edges and proper bead shape. The sealant skins over quickly to prevent "tracking" and cures through at temperatures above 40°F, usually in 16 to 24 hours. Traffic usually can be allowed over sealed joints within one hour.

1. PRODUCT NAME

General Electric Company SCS 4403 Highway Joint Sealant.

2. MANUFACTURER

General Electric Company
Silicone Products Division
Waterford, New York 12188
Telephone: (518) 237-3330

3. PRODUCT DESCRIPTION & USES

General Electric SCS 4403 is a one-part, low modulus silicone sealant designed for use with SCP 3165 primer in Highway Joint applications. Easily applied over a wide temperature range, SCS 4403 cures quickly on exposure to atmospheric moisture to form a weather resistant, highly elastic seal with unique stress relaxation properties (see Figure 1). The modulus of elasticity remains relatively constant over a wide temperature range (−80 to +300°F) so the sealant does not put excessive stress on the bond line during extension at low temperature, nor soften and deform under compression at high temperatures.

The quick cure of SCS 4403 sealant allows traffic over the sealed joints within hours of sealant placement.

SCP 3165 primer enhances adhesion and provides an added safety factor against adhesion failure due to residual moisture in the concrete and surface variables. Heed warning statement on primer label.

4. LIMITATIONS

SCS 4403 sealant must not:

- Be applied to unprimed concrete.
- Be applied to unprepared concrete. Concrete joint surfaces must be clean, dry, dust-free, frost free and free of bond breaking contaminants such as oils, grease, tar, asphalt paint, etc.
- Be applied to areas where continuous water immersion is expected.
- Be used unless the bead can be recessed below the concrete slab surface to minimize abrasion from traffic and tear out by snow removal equipment.

TABLE 1
TYPICAL PROPERTIES
14 Days @ 73°F(23°C) and 50% R.H.

Property	Value	Test Method
Hardness (Shore A)	20	ASTM-D-2240
Tensile Strength	200psi (14.5 kgf/cm²)	ASTM-D-412
Tear Strength	30ppi (5.4 kg/cm)	ASTM-D-624
Dynamic Movement Capability	±50%	Cycling at 1/8"/hr.
Ultraviolet & Ozone Resistance	Excellent	6000 hrs. in Weather-O-Meter
Tack Free Time	1 Hr.	TT-S-001543-A
Tooling Time	6 Min.	Waterford Test Method
Sag: Slump	Nil	TT-S-001543-A

TABLE 2
TYPICAL ADHESION PROPERTIES ON SCP 3165 PRIMED CONCRETE

Peel Adhesion Lbs. Pull	% Cohesion
Per ASTM-C-794-75 35 P.P.I.	100%
Repeated cycling at ÷50% extension 1/2 x 1/2 x 2" bead at 75°F per ASTM-C-719-72	No Adhesion or Cohesion Failure after 1000 cycles at 1/32"/min.

FIGURE 1
STRESS RELAXATION
ORIGINAL MODULUS VS. SUBSEQUENT REPEATED CYCLING UP TO 75% OF ORIGINAL JOINT WIDTH.

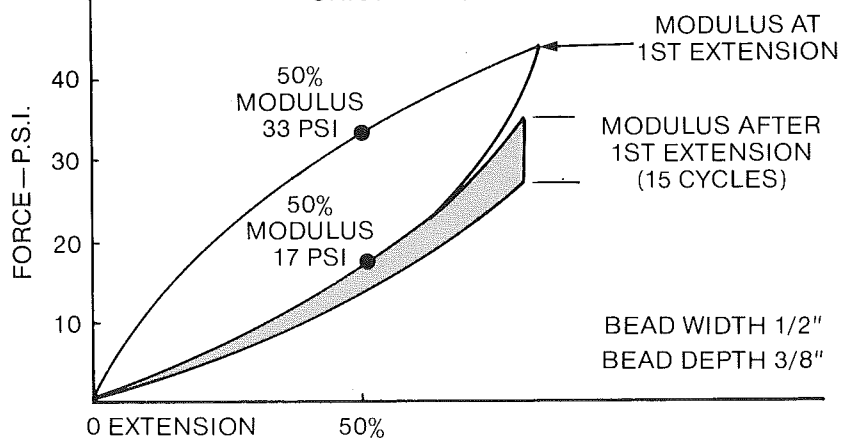

5. JOINT DESIGN

Proper joint design is important to the performance of SCS 4403 sealant. To provide the optimum bead configuration the depth of the sealant bead should be no greater than 1/2 inch and no less than 1/4 inch. Ratio of bead width to depth should not exceed 2 to 1. Joint width should be at least 2 times total expected movement, at the time of sealant application but not more than one inch unless a cover plate is used to prevent direct traffic exposure. Joint depth must be adequate to allow proper placement of backer rod and sealant.

6. SURFACE PREPARATION

Joints may be created by forming (new concrete) or saw cutting. Existing joints may be prepared by saw cutting, sand or water blasting, grinding or other suitable means. Joint surfaces to be sealed must be clean, dry, frost-free and free of other bond breaking contaminants as outlined in the preceding "Limitations" section. After the above preparation steps a final cleaning by blowing out the joints with *oil free* compressed air is recommended to remove dust and loose particles.

7. PRIMING

SCP 3165 Primer should be applied as it comes from the container in a thin film to the joint edges. It is important that the primer fully wet the surfaces to be sealed. Primer may be applied by brush or airless spray equipment (see

Table 4). Safety precautions printed on the label must be followed. Priming should be done prior to the rod installation. Allow primer to dry tack-free prior to installation of backer rod. Drytime may be 20 minutes or less. SCP 3165 is flammable and must be used with the appropriate precautions.

8. BACKER ROD

The use of backer rod is essential to obtain proper shape and depth of sealant beads and produce a bond breaker to prevent three sided adhesion. Closed cell polyethylene foam rod is available and recommended for use with SCS 4403 Sealant. The rod diameter should be at least 25% greater than the width of the joint so that it fits snugly in the joint and is not displaced during sealant application. The backer rod should be placed at a depth of 1/2 to 3/4 inch to allow placement of the proper depth of sealant plus the 1/4 inch depth for sealant recess below the slab surface.

9. SEALANT APPLICATION

SCS 4403 may be pumped directly from 5 gallon plastic pails or drums, through compressed air powered pumping equipment designed for use with moisture curing silicone sealants. (see Table 3 for manufacturers of pumping equipment). Sealant application nozzles should be designed so that sealant is applied within the confines of the joint slot and sealant should be applied so that it is held below the surface of the slab yet completely filling the width of the joint.

Immediately after the sealant is applied it should be tooled to provide firm contact with the joint edges and to form the 1/4" recess below the slab surface. The depth of sealant over the crown of the backer rod should be 1/4 to 1/2 inch.

10. CURE TIME

SCS 4403 Sealant skins over quickly at temperatures above 40°F and cures through to the recommended depth within 16 to 24 hours at temperatures above 40°F. If sealant is applied in joints where no rocking or slab deflection is expected, traffic may be allowed over the sealed areas within one hour of application. If vertical deflection due to slab movement is expected, sealant should be allowed to cure for a longer period of time to prevent displacement of the sealant due to backer rod movement and to obtain adhesion to the primed joint surface.

An overnight cure is usually adequate in all but extreme movement conditions or lower temperatures than 40°F.

TABLE 3
TYPICAL SEALANT EXTRUSION PUMP RECOMMENDATIONS

Company	Equipment
Aro Corporation One Aro Center Bryan, Ohio 43506	Model #650689-2 pump on #6510603 single post ram. 46:1 pump ratio, chop check inlet. Teflon packings.
Graco, Inc. PO Box 1441 Minneapolis, Minn. 55440	Bulldog #206-741 or #206-450 ram. 40:1 pump ratio chop check inlet. Teflon packings.
Pyles Industries, Inc. 28900 Wixom Road Wixom, Michigan 48096	700 series model #718-43-20A. 38:1 pump ratio chop check inlet. Teflon packings.

Hose Recommendations: Use Aeroquip Corp. #2808 Teflon lines 3/4"I.D. braided hose or equivalent. Do not exceed pressure recommended by hose manufacturer. Aeroquip Corporation, Jackson, Michigan 49203.
Note: Delivery rates of above pumping systems will vary with hose length, nozzle restrictions, air volume and pressure supply.

TABLE 4
TYPICAL SPRAY PUMP FOR PRIMER

Company	Equipment
H. D. Hudson Co. Professional Prod. Div. 1309 18th St. So. Moorehead Min. 56560 (818)-965-2112 (Contact above for distribution in your area)	"X-pert" sprayer Hand operated. Catalog #67422-A w/#8022EHSS fan spray nozzle

11. PRECAUTION

Product contact causes eye irritation. Avoid contact with eyes. In case of contact with eyes, immediately flush eyes with water for at least 15 minutes. If irritation persists see a physician. Product may irritate skin. To remove wipe the skin with a dry cloth or paper towel then wash with soap and water. Keep out of reach of children. For information, call 518-237-3330.

12. AVAILABILITY AND COSTS

SCS 4403 is available in 5 gallon plastic pails. (4.5 gallons per pail). Costs and purchasing information is available through General Electric District Sales offices. See Table 5 for sealant estimating requirements.

13. MAINTENANCE

If silicone sealant becomes damaged, replace damaged portion. Clean surfaces in damaged area, and repair with fresh silicone sealant.

14. STORAGE AND SHELF LIFE

If stored in original unopened containers below 80°F, the shelf life of SCS 4403 Sealant is 12 months and SCP 3165 primer is 6 months from dates of shipment.

15. TECHNICAL SERVICES

Complete technical information and literature is available from General Electric Technical Centers. Laboratory facilities and application engineering are available on request from General Electric. Any technical advice furnished by the Company or any representative of the Company concerning any use or application of any sealant is believed to be reliable but the Company makes no warranty, express or implied, of any use or application for which such advice is furnished.

TABLE 5
ESTIMATING REQUIREMENTS
Linear feet per gallon of General Electric SCS 4403 Sealant for joint widths

Depth/Inches	1/4"	3/8"	1/2"	5/8"	3/4"	1"
1/4"	308	205	154	123	103	77
3/8"	205	137	103	82	68	51
1/2"	154	103	77	62	51	38