Arizona Department of Transportation
Bridge Group

BRIDGE PRACTICE GUIDELINES

Table of Contents

SECTION 1: GENERAL

SECTION 2: GENERAL DESIGN AND LOCATION FEATURES

SECTION 3: LOAD AND LOAD FACTORS

SECTION 4: STRUCTURAL ANALYSIS AND DESIGN METHODS

SECTION 5: CONCRETE STRUCTURES

SECTION 6: STEEL STRUCTURES

SECTION 7: ALUMINUM STRUCTURES

SECTION 8: WOOD STRUCTURES

SECTION 9: DECKS AND DECK SYSTEM

SECTION 10: FOUNDATIONS AND SUBSTRUCTURES

SECTION 11: RETAINING WALLS AND SOUND BARRIER WALLS

SECTION 12: CULVERTS AND BURIED STRUCTURES

SECTION 13: RAILINGS

SECTION 14: JOINTS AND BEARINGS

SECTION 15: TRAFFIC STRUCTURES

SECTION 16: BRIDGE CONSTRUCTION

Arizona Department of Transportation
Bridge Group

BRIDGE PRACTICE GUIDELINES

SECTION 1- GENERAL

Chapter	Page	Issue Date
PURPOSE	3	7/16/01
STRUCTURE IDENTIFICATION	3	7/16/01
Bridge Definition	3	7/16/01
Structure Name	3	7/16/01
Structure Number	4	7/16/01
Station	4	7/16/01
Route and Milepost	5	7/16/01
BRIDGE DESIGN PHASES	5	7/16/01
General	5	7/16/01
Initial Design	5	7/16/01
Figure 1 – Initial Bridge Study Title Sheet	8	7/16/01
Figure 2 – Initial Bridge Study Report Body	9	7/16/01
Figure 3 – Initial Bridge Study Concept Sketch	10	7/16/01
Preliminary Design	11	7/16/01
Preliminary Bridge Selection Report	11	7/16/01
Bridge Over Waterways	12	7/16/01
Widenings/Rehabilitation	12	7/16/01
Approval	13	7/16/01
Bridge Selection Report	13	7/16/01
FHWA Approval	13	7/16/01
Final Design	13	7/16/01
Stage III	14	7/16/01
Stage IV	14	7/16/01
PS & E Submittal – Stage V	14	7/16/01
Bid Advertisement Date	14	7/16/01
Bid Opening	14	7/16/01
Post Design Services	14	7/16/01
BRIDGE PROJECT ENGINEER'S RESPONSIBILITY	15	7/16/01
General	15	7/16/01

Selection of Bridge Project Engineers	15	7/16/01
Duties of Bridge Project Engineers	16	7/16/01
CONSULTANT REVIEW PROCEDURES	17	7/16/01
General	17	7/16/01
Documentation	17	7/16/01
Reviews	18	7/16/01
30% Submittal	18	7/16/01
60% Submittal	18	7/16/01
95% Submittal	19	7/16/01
100% Submittal	19	7/16/01
Project Review	19	7/16/01
COMPUTING APPROXIMATE QUANTITIES	20	9/24/01
General Guidelines	20	9/24/01
Concrete	20	9/24/01
Table 1 - Approximate Quantities	21	9/24/01
Table 2 - Sample Approximate Quantities for Concrete	22	9/24/01
Reinforcing Steel	23	9/24/01
Table 3 - Weights in lbs of Deformed Reinforcing Bars	24	9/24/01
Table 4 - Weights of ½ " Spirals per Vertical Foot	24	9/24/01
Structural Steel	25	9/24/01
Table 5 - Sample Approximate Quantities for Reinforcing Steel	26	9/24/01
Table 6 – Sample Approximate Quantities for Structural Steel	27	9/24/01
Inclusion List for Structural Steel	28	9/24/01
Table 7 – Structural Steel Plate Weight Increase	28	9/24/01
Table 8 – Weight of Stud Shear Connectors	28	9/24/01
Table 9 – Weights in lbs of Welds per Linear Foot (45° fillet weld)	29	9/24/01
Exclusion List for Structural Steel	29	9/24/01
Structural Steel (Miscellaneous)	29	9/24/01
Structural Excavation	30	9/24/01
Structure Backfill	30	9/24/01
Figure 10 – Structural Excavation Payment Limit	32	9/24/01
Figure 11 – Structure Backfill Payment Limit	33	9/24/01
Drilled Shafts	34	9/24/01
Driven Piles	35	9/24/01
Figure 12 – Length of Piling	36	9/24/01
Precast Prestressed Concrete Members	37	9/24/01
Miscellaneous Items	38	9/24/01

PURPOSE

The purpose of these Guidelines is to document ADOT Bridge Group design criteria and to provide guidance on interpretations of the various AASHTO publications and other documents as related to highway bridges and appurtenant structures.

The Guidelines are intended to be used for general direction. It will continue to be the responsibility of the designer to ensure that these guidelines are applied properly and modified where appropriate with the necessary approvals. The guidelines should be used with judgment to ensure that the unique aspects of each particular design are properly considered.

STRUCTURE IDENTIFICATION

The procedures for structure identification are established by the National Bridge Inspection Standards. Refer to the Recording and Coding Guide for the Structure Inventory and Appraisal of the Nation's Bridges prepared by FHWA and the Arizona Structure Inventory prepared by ADOT Bridge Management Section.

Bridge Definition

"A 'bridge' is defined as a structure including supports erected over a depression or an obstruction, as water, highway or railway and having a track or passageway for carrying traffic or other moving loads and having an opening measured along the center of the roadway of more than 20 feet between undercopings of abutments or springlines of arches or extreme ends of openings for multiple boxes; it may include multiple pipes, where the clear distance between openings is less than half of the smaller contiguous opening."

Structure Name

Names of State bridges are assigned by the Bridge Management Section Leader. Structures are named in accordance with the kind of facility that goes under or over the principal route. A traffic interchange structure will have "T.I." as part of the name. Overpasses carrying one-way traffic will also include the direction of traffic as part of the name. The name is limited to a 20 digit field.

Term	**Description**
Bridge	The term "bridge" is usually reserved for structures over water courses or canyons.
Overpass	A structure carrying the principal route over a highway, street or railroad.
Underpass	A structure which provides for passage of the principal route under a highway, street, railroad or other feature.
Traffic Interchange (T.I.)	An overpass or underpass is also called a T.I. if on and

	off ramps are provided to the intersecting roadway.
Viaduct	A structure of some length carrying a roadway over various features such as streets, waterways or railroads.
Tunnel	A structure carrying a roadway through a hill or mountain.
Pedestrian Overpass	A structure carrying a pedestrian walkway over a roadway.
Pedestrian Underpass	A structure which provides for passage of a pedestrian walkway under a roadway.

Structure Number

Each defined 'bridge' has a unique number assigned by the Bridge Management Section according to the group of numbers allotted to each maintenance responsibility. Twin or parallel structures are numbered individually if there is an open median.

Structure number identification remains unique and permanent to that structure. The structure number will be retired only for structures totally removed, for one of two twin structures where the median is closed by subsequent construction or for transfer between state and local agency jurisdiction.

The structure numbers allotted to each maintenance responsibility category are as follows:

Structure Number	**Maintenance Responsibility Category**
0001-2999	State jurisdiction bridges
3000-3999	Federal jurisdiction bridges
4000-7999	State jurisdiction culverts
8000 and above	Local jurisdiction bridges and culverts

Station (Principal Route)

The station identification of the structure is located along a construction centerline of the principal route on or under the structure as determined from the State Highway System Log.

For overpass structures with the principal route on the structure, the beginning bridge station is used which is located at the backwall of abutment 1.

For underpass structures with the principal route under the structure, use the station of the point of intersection between the principal route under and the construction centerline on the structure.

For culvert structures, under 20 feet use the station of the point of intersection between the principal route and the construction centerline of the culvert. For culvert structures 20 feet and over, use the station of the beginning backwall.

Route and Milepost

The principal route and milepost identification shall be shown on all plan sheets. The milepost of the route on or under the structure is determined from the Arizona Highway System Milepost Log. The milepost is recorded to the nearest 1/100th of a mile as calculated from the Station (Principal Route).

BRIDGE DESIGN PHASES

General

The design of a major structure consists of three design phases: Initial Design, Preliminary Design and Final Design.

The **Initial Design Phase** consists of examination of bridge concepts including type, length and depth. These studies may be prepared prior to submitting a project in the 5 Year Program or in conjunction with the preparation of a Project Assessment (PA) or a Design Concept Report (DCR). These studies will form the basis for the Bridge Selection Report and provide the Geotechnical Engineer with sufficient information to order one or two initial borings to be used in providing a preliminary foundation recommendation.

The **Preliminary Design Phase** consists of two distinct activities. The first activity is the Alternatives and Selection Study Phase where different bridge types with varying span lengths, girder spacings and foundation types are investigated along with other structure types and comparative cost estimates. This activity results in a Preliminary Bridge Selection Report which will be distributed for comments and provide the Geotechnical Engineer with the required information to perform a final drilling program and produce a Bridge Geotechnical Report. The second activity consists of finalizing the Bridge Selection Report based on the final Bridge Hydraulics Report and Bridge Geotechnical Report.

The **Final Design Phase** consists of performing the required design calculations, drawing the plan sheets, preparing a final estimate and preparing the Special Provisions for bridge related items.

Initial Design

The Initial Design Phase consists of developing an Initial Bridge Study. The purpose of the Initial Bridge Study is to:

- Provide the structure depth for setting profile grades.
- Establish the best possible early cost estimate.

- Allow for Bridge Group input in scoping activity.
- Familiarize Bridge Design with upcoming projects.
- Describe and document the design assumptions used in the development stage.
- Document the existing bridge condition, including waterway adequacy if appropriate, for bridge replacement projects.

Up to three studies could be made during this phase; one as a study to determine a project's merits prior to becoming a project to be included in the 5 Year Program, one as for development of the Project Assessment and one as information for development of a Design Concept Report. The purpose of these studies is to develop as early as possible a feasible type of structure, cost and design restrictions for each site. The completeness of the study will depend on when the study is performed. For example, a study for a Design Concept Report should have more information than a pre-programmed study. Each of the three possible study times should be viewed as part of a continuous effort to define the scope of the project with each new study building on the previous study.

An Initial Bridge Study will be performed for all major bridge projects to be nominated to the 5 Year Program by the Bridge Group or the Districts prior to nomination. For existing bridges, this study will be performed in conjunction with the Bridge Candidate List for the Highway Bridge Replacement and Rehabilitation Program to help determine which candidate bridges should be programmed for replacement. Close coordination with Bridge Management Section, Drainage Section and the Districts will be required. These studies will examine the condition of qualified existing bridges to determine which bridges should be developed into replacement projects.

An Initial Bridge Study will be performed for all major structures during the Project Assessment Stage. If a study has already been performed, the original study should be updated and enhanced based on whatever additional data has become available. The project manager will initiate the process and establish the schedule for this activity.

When concensus can not be reached at the Project Assessment Stage, the project will require a Design Concept Report. Previous studies should be used as a basis for a new Initial Bridge Study; however, additional alignments will be investigated requiring additional studies of alternates.

On projects involving rehabilitation or replacement of existing bridges, the project manager shall identify the historical significance of the bridge before concept studies are initiated. The historical significance is determined from the Arizona Structure Inventory and involves a variety of characteristics: the bridge may be a particularly unique example of the history of engineering; the crossing itself might be significant; the bridge might be associated with a historical property or area; or historical significance could be derived

from the fact the bridge was associated with significant events or circumstances. A copy of the Arizona Structure Inventory is on file.

For projects where existing bridges are involved, a thorough review of the Bridge Inspection File and coordination with Bridge Management Section will be required. The major study emphasis will be to verify the condition of the existing bridge, to develop concepts for replacement including the feasibility of widening or rehabilitating versus replacement, and to determine project costs. At this stage, bridge costs will be based on square foot of deck.

These Initial Bridge Studies are concepts based on the best available information and are subject to change. Assumptions used as the basis for these studies should be clearly documented and items that are likely to be subject to change as more information is obtained should be identified.

An Initial Bridge Study will consist of a title sheet, report body and concept sketch. Refer to figures 1,2 and 3 for a sample of format and contents.

FIGURE 1
INITIAL BRIDGE STUDY TITLE SHEET

ARIZONA DEPARTMENT OF TRANSPORTATION

BRIDGE GROUP

BRIDGE DESIGN SECTION A, B or C

INITIAL BRIDGE STUDY

DATE

HIGHWAY NAME

PROJECT NAME

PROJECT NUMBER

TRACS NUMBER

BRIDGE NAME

EXISTING STRUCTURE NUMBER

MILEPOST

Prepared by _____ Date _____

FIGURE 2
INITIAL BRIDGE STUDY REPORT BODY

GENERAL:

This section should contain a general discussion of the project including location of the bridge and purpose of the study.

EXISTING ROADWAY:

This section should contain a discussion of the existing roadway geometrics including identification of any deficiencies.

EXISTING DRAINAGE:

This section should contain a discussion of the hydrology and hydraulics of the site including design Q, high water, capacity, bank protection and scour vulnerability of existing bridge.

EXISTING BRIDGE:

This section should contain a discussion of the bridge geometrics and condition of the existing bridge including: rating of the deck and superstructure, adequacy of existing bridge rail, whether bridge is designed for a future wearing surface, the seismic vulnerability, condition of the bearings, expansion joints and approach slabs and a recommendation on whether the bridge could be widened or rehabilitated.

ALTERNATES:

This section should contain a discussion of the various alternates investigated including: structure type, superstructure depth, girder spacing, column type and spacing, foundation alternates, construction phasing, traffic handling and costs.

FIGURE 3
INITIAL BRIDGE STUDY CONCEPT SKETCH

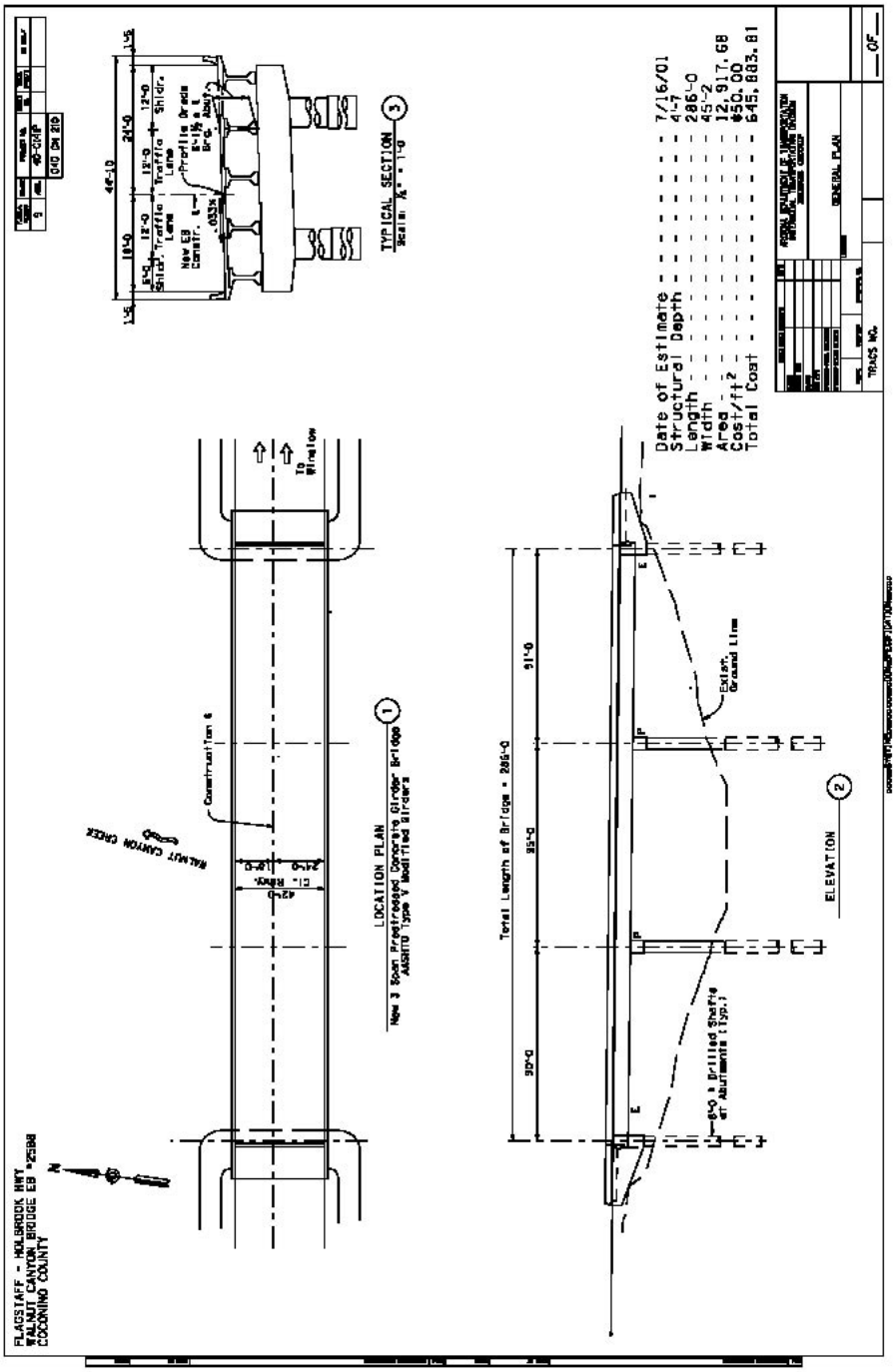

Preliminary Design

Preliminary design consists of three distinct activities: (1) performing concept studies and producing a Preliminary Bridge Selection Report, (2) development of preliminary plans for the chosen alternate and finalizing the Bridge Selection Report and (3) obtaining FHWA approval of the Bridge Selection Report.

Preliminary Bridge Selection Report

The Preliminary Bridge Selection Report consists of performing concept studies as a continuation of the Initial Bridge Study. These studies involve investigating alternate superstructure and foundation types including variations of span length, structure depth and number of girders to determine the best bridge type and arrangement for a particular site. This portion of the Preliminary Design Phase is an iterative phase where assumptions must be made and later verified or modified during the process. Detailed in-depth design should not be performed in this phase unless it is necessary to confirm the adequacy of the concept.

When performing the concept studies the following shall be considered as a minimum:

- Cost
- Constructability
- Maintenance
- Aesthetics

Sketches should be made of the various alternates.

During this phase, both the vertical and horizontal clearances should be checked to ensure that the adequate clearances are provided. Inadequate vertical clearance will necessitate a change in either profile grade or superstructure depth while inadequate horizontal clearance may necessitate a change in span length.

During this phase, the geotechnical aspects of the site should be considered since the foundation type and associated cost may influence the type of bridge selected. Since a preliminary drilling program has been performed following the Initial Design Phase, a preliminary Bridge Geotechnical Report will be available for use in determining foundation type and costs.

During this phase, the traffic requirements must be investigated including any detours or phasing requirements. These details should be worked out with Traffic Design.

The need for a deck protection system and type of system will be determined during this phase. Details of the system should be worked out with Bridge Management Section.

Bridges over Waterways

For waterway crossings, the Preliminary Design Phase will require coordination with Drainage Section or the drainage consultant, as appropriate. The designer should obtain the Bridge Hydraulics Report and thoroughly review the contents before starting the concept study phase.

Widenings/Rehabilitation

On projects involving widenings, in addition to the requirements for new bridges, the following items should be investigated during the Preliminary Design Phase:

- Comments from the environmental process concerning the historical significance of the structure, if any, should be added to the discussion of the historical significance contained in the Initial Bridge Study.

- The existing structure should be checked for structural adequacy. The main superstructure girders should be checked for adequacy to carry the appropriate design live load. If the bridge does not rate sufficiently high, the girders may need to be strengthened, respaced or replaced, or a new bridge may be recommended. The deck slab should also be checked. Decks that are severely overstressed may require replacement.

- The condition of the existing deck joints should be investigated. If the existing joints are not working or are inadequate, they may require replacement.

- The condition of the existing bearings should be investigated. If the existing bearings are not performing adequately, they may require modification or replacement. This can affect cost and traffic phasing.

- The condition of existing diaphragms on steel girder bridges should be investigated. The need for this or any other repair work should be determined at this time. Welded diaphragms have caused past problems.

- The existing foundations should be checked for adequacy against predicted scour and if inadequate, appropriate means taken to upgrade the foundations against failure.

- The existing waterway opening should be checked to ensure that it can properly handle the design frequency event. Assessment of scour vulnerability and condition of bank protection should be included.

- The need for adding approach slabs and/or anchor slabs, if missing, should be investigated.
- The adequacy of existing bridge rail, that would be left in place, should be investigated.

- The need for earthquake retrofit measures should be determined.

- Existing or proposed utility conflicts should be investigated.

When the above items have been investigated, preliminary design can proceed by studying alternatives. Possible alternatives include: widening to one side, widening symmetrically on both sides or replacing the bridge with a new structure. Approximate costs based on preliminary quantities and unit costs associated with each solution will be required.

Approval

When a decision has been reached concerning the type of bridge selected, the justification for the choice along with comparative cost estimates and sketches should be summarized in the Preliminary Bridge Selection Report. This report should be submitted to the Section Leader and State Bridge Engineer for approval.

When approved, the Preliminary Bridge Selection Report should be presented to the Geotechnical Engineer for their use in conducting a final geotechnical investigation.

Bridge Selection Report

The finalization of the Bridge Selection Report is the second activity in the preliminary design phase. This activity involves incorporating the contents of the final Bridge Hydraulics Report and final Bridge Geotechnical Report into the Preliminary Bridge Selection Report to produce a final Bridge Selection Report and develop the preliminary plans for the approved alternative. The preliminary plans consist of the General Plan and the General Notes and Quantities Sheets. The preliminary plans are not considered complete until the Bridge Hydraulics Report and Bridge Geotechnical Report are received and incorporated in the plans. There may be up to a six month delay between ordering drilling and receiving a recommendation.

FHWA Approval

This activity consists of obtaining FHWA approval of the Bridge Selection Report for Federal Aid Projects. Upon receipt of FHWA approval, the Preliminary Plans are considered complete and the Final design of the bridge may start.

Final Design

The Final Design Phase consists of performing the required structural analysis for the bridge and drawing the required details for the development of the construction drawings, producing the final cost estimate and preparing the Special Provisions. This phase should not start until the preliminary documents have been approved.

Final design consists of two phases: the first phase consists of designing and producing drawings for the Stage III document submittal, the second phase consists of completing the Stage IV final documents.

Stage III

This activity involves completion of most of the structural analysis; some of the drawings, a preliminary cost estimate with quantities and unit costs; and any required special provisions.

This phase will also include reviewing the 60% project plans, submitting comments and attending the office and/or field review.

Stage IV

This activity consists of incorporating the Stage III review comments in the design, completing the structural analysis and drawings, producing final quantities and a final cost estimate, and reviewing the Special Provisions.

When the project design is complete and quantities are calculated, a cost estimate shall be made. Unit costs may be obtained from the latest copy of the Unit Cost Summary and from the Bridge Group Bridge Costs Records. Unit prices should be adjusted for site location, size of project and other pertinent data.

PS & E Submittal - Stage V

The Plans, Specifications and Estimate (PS & E) Submittal is the final review of the project. This submittal shall be made when requested by the Control Desk. Complete plans and final quantities should always be finished by this date.

Bid Advertisement Date

The Bid Advertisement Date is the date the project is advertised. The Active Project Status Report refers to this date as the Bid Date. When requested by the Control Desk, the complete, signed and stamped tracings shall be sent to the Control Desk for printing of the bid sets.

Bid Opening

The Bid Opening is the date when the bids are opened. This activity normally ends the design phase. The construction contract for the project is then awarded at the next scheduled Arizona Transportation Board meeting.

Post Design Services

Post design services include the following activities: attending partnering sessions, making plan changes as a result of errors or changed conditions, approving falsework and shop drawing submittals, supervising structural steel inspections, producing as-built plans and reviewing the final as-built structural drawings for evaluation of design work and study for improvement.

BRIDGE PROJECT ENGINEER'S RESPONSIBILITY

General

Bridge Project Engineers are to be assigned to all new projects in which structure plans are required. The Bridge Engineer or Bridge Designer will be designated as the Bridge Project Engineer when the project study report or final Project Assessment becomes available and will be responsible for project delivery for all structure related items thru PS & E completion and subsequent construction contract completion.

Bridge Project Engineers are hereby given the authority and will be responsible for seeing that all Bridge Group design features comprising the PS & E package on projects are delivered on time, within budget, and in conformance with standards, to meet established schedules. Such features include structure plans for bridges, earth retaining structures, hydraulic structures, highway sign and lighting support structures, specifications for structures, and cost estimates for structures.

Bridge Project Engineers may also have responsibility for coordinating work efforts for completion of all work tasks if they are assigned as Project Managers according to the provisions of the Project Management process.

Selection of Bridge Project Engineers

Bridge Designers and Bridge Engineers interested in being selected as Bridge Project Engineers must obtain their Professional Engineer License and they must exhibit a majority of the following skills or traits:

- Has developed the technical skill.
- Gets along well with people.
- Is an innovator.
- Has initiative.
- Communicates effectively.
- Is practical.
- Has leadership abilities and will make decisions.
- Keeps abreast of technical developments.

- Has an understanding of ADOT policies and procedures.

- Understands the importance of project deadlines.

Duties of Bridge Project Engineers

A Bridge Project Engineer is assigned to support or act as the Project Leader or Project Manager and to direct the specific work effort assigned to Bridge Group. The duties of the Bridge Project Engineer shall include:

- Remain completely knowledgeable about the specific project tasks assigned.

- Direct the project work activities assigned.

- Coordinate with the project leader or project manager, as appropriate, on schedule, budget and quality control.

- Provide input for establishing a project's network model and on a continuous basis, provide input to update schedule data in the Management Scheduling and Control System.

- Review all preliminary reports for the project.

- Review bridge maintenance records for widening and rehabilitation projects.

- Review prior commitments to other agencies and coordinate commitments with ADOT policies.

- Direct preparation of Bridge Selection Reports and submit for approval as required.

- Coordinate structural details and design features within the project. Conduct meetings with designers and detailers as required.

- Work closely with other groups and services so that decisions in these areas are timely and consistent throughout the project.

- Attend scheduled progress meetings and site visits and provide information as required.
- Submit structure plans, special provisions and cost estimate on schedule.

- Coordinate all bridge construction liaison activities such as shop drawing review, construction modifications and final as-building.

CONSULTANT REVIEW PROCEDURES

General

This section is intended to provide procedures to be followed by the Bridge Design Sections in their review of consultant designs. The intent of these procedures is to produce consultant designs which have the same appearance (format and content) as ADOT Bridge Group in-house designs and to promote consistency among the three Design Sections and the consultants.

A Project Engineer will be assigned to each consultant review project. Large bridge projects will usually also have a designer assigned to the project to assist in the review.

Documentation

Reviews will be performed on scoping documents such as Project Assessments or Design Concept Reports whether prepared by a consultant or ADOT. Reviews will also be performed on consultant bridge designs at the 30%, 60%, 95% and 100% stages.

All submittals shall be stamped with the date received and a log book of all consultant review submittals shall be kept by each Section. The log shall track the type of review document, the date each submittal is received, the date when comments are due, and the date comments are returned.

An official project review file, consisting of hard grey filing folders, and a working file should be maintained for each project. The official project review file shall be organized the same as for in-house designs with a title sheet, an index and correspondence on the left side and review comments on the right side. The working file shall contain the submittal documents, special provisions and reviewer calculations.

Review comments should be returned to the project manager and be submitted on a Bridge Group Comment Review Form. A copy of all review comments shall be kept in the Official Project Review File.

Reviews

At each review stage, the reviewer should verify that all previous comments have been resolved and are properly reflected in the new submittal. When all old comments have been resolved, the old submittal documents may be discarded.

Reviews should be made to ensure that each submittal meets the requirements for the appropriate submittal stage. Reviews should also verify major features of the design but should not include number by number calculation checks. Calculations will not usually be submitted unless requested by the reviewer.

30% Submittal

For a 30% submittal, the following items should be included as a minimum:

- General Plan
- Bridge Selection Report
- Cost Estimate
- Final Bridge Geotechnical Report
- Final Bridge Hydraulics Report

Review of 30% submittals should be limited to ensuring that the proper bridge type, span lengths, widths and structure depth have been selected. An independent preliminary superstructure analysis should be performed to verify the structure depth. The reviewer should also check for consistency between the Geotechnical and Hydraulics Reports as related to the recommended foundation type. The General Plan and General Notes and Quantity Sheets should be complete except for the quantity box. Unit costs should be reviewed and bid items compared to the Approximate Quantity Manual guidelines.

60% Submittal

For a 60% submittal the following items should be included as a minimum:

- 60% Bridge Plans
- Superstructure completed
- Boring logs completed
- Substructure started
- Draft Bridge Special Provisions
- Cost Estimate including Bid Items, Item numbers and unit costs

Review of 60% submittals should consist of ensuring that major bridge items have not changed from the 30% submittal and that all 30% comments have been incorporated into the plans. The deck and superstructure designs should be checked. The superstructure plan sheets should be complete. The reviewer should verify that the substructure is consistent with the Bridge Geotechnical Report.

95% Submittal

For a 95% submittal the following items should be included as a minimum:

- 95% Bridge Plans
- Final Special Provisions
- Final Cost Estimate

Review of 95% submittals should consist of ensuring that 60% review comments have been incorporated into the plans. A review of the substructure for clarity and completeness should be made.

100% Submittal

The 100% submittal should be reviewed to ensure that the 95% comments have been incorporated into the plans and that all outstanding issues have been resolved.

Project Review

In addition to the review of bridge documents, the reviewer should review the project plans for consistency between the bridge plans and the civil and traffic plans. Items such as roadway profiles, bearings and width should be reviewed.

Other items which should be reviewed include the appropriate use of Standard Drawings including such design features as CBCs, retaining walls, pipe headwalls and tubular sign supports. Items involving special design should be given oversight review. Such items might include light poles, sign supports, tubular signs, FMS, retaining walls, CBCs, miscellaneous structural items, sound walls and Barrier Summary Sheets.

COMPUTING APPROXIMATE QUANTITIES

General Guidelines

The Purpose of this section is to establish guidelines and methods for the computation of approximate quantities for bridges and related structures and to identify the proper Bid Item Numbers. Quantities are used in the preparation of the Engineer's estimates and in establishing bid schedules. Contractors use the quantities as a basis for making contract bids. Box Culvert quantities are to be computed in accordance with the Reinforced Concrete Box Culvert Manual.

Sample approximate quantities sheets, Table 1, are provided to show the accuracy required for calculations.

A second set of computations for each structure should be made by a checker independently of the original calculations. This rigorous check is needed to minimize error and prevent the omission of a major item.

Small sketches of the items being calculated should be shown on the calculation sheets when the item description is not completely self-explanatory. The effort made to keep the calculation sheets easy to follow will be invaluable during back-checking.

This section identifies commonly used Standard Bid Items with Descriptions, Materials, Construction Requirements, Methods of Measurements and Basis of Payments in accordance with ADOT Standard Specifications. If a new Bid Item is required, a Special Provision will have to be written. Contracts and Specifications Section should be contacted for the proper number to be used.

If the structure drawings do not give enough information to compute the quantities, it is evident they are deficient and should be revised.

Concrete

The total figure of each item entered in the approximate quantities table as superstructure, pier or abutment is to be rounded to the nearest C.Y. The degree of accuracy required in deriving this total is outlined on Table 2, titled "Sample Approximate Quantities for Concrete".

In cases where the designer has used more than one class or strength of concrete, caution should be exercised so that each part of the item figured is grouped in the proper class and strength of concrete.

TABLE 1
APPROXIMATE QUANTITIES

APPROXIMATE QUANTITIES

ITEM	STRUCT. EXCAV. C.Y.	STRUCTURE BACK FILL C.Y.	CLASS 'S' CONCRETE		REINF. STEEL LBS.	STRUCT. STEEL LBS.	PEDESTRIAN RAIL L.F.	SLOPE PAVING S.Y.	60" DIA. DRILLED SHAFT L.F.
			f'C= 3000 C.Y.	f'C= 4500 C.Y.					
ABUT. #1	60	10	20		2,105			400	
PIER #1	65	15	64		4,885				110
PIER #2	75	15	64		4,885				
ABUT. #2	65	10	20		2,105			400	115
SUPERSTRUCTURE			21	268	51,520	132,415	238		
TOTALS	265	50	189	268	65,500	132,415	238	800	225
AS-BUILT									

ROUND TO NEAREST 5 C.Y.

ROUND TO NEAREST C.Y.

ROUND TO NEAREST 5 LBS.

ROUND TO NEAREST FOOT

ROUND TO NEAREST 5 S.Y.

ROUND TO NEAREST FOOT

TABLE 2
SAMPLE APPROXIMATE QUANTITIES FOR CONCRETE

ARIZONA DEPARTMENT OF TRANSPORTATION
APPROXIMATE QUANTITIES

TRACS NO.: **SHEET 1 OF 3**
STATION **STRUCTURE NAME** **NB/EB** **DATE: 3-15-2001**
SB/WB **BY ABC CHKD DEF**
PROJ. NO.: **OTHER:**
CLASS "S" f'c = **psi** ☐ **STRUCT. BKFL.** ☐ **STRUCTURAL EXCAVATION** ☐
FOR: Superstructure-Class 'S' Concrete

ITEM DESCRIPTION	UNIT DEPTH (ft)	UNIT WIDTH (ft)	UNIT LENGTH (ft)	NO OF UNITS (PER ITEM)	TOTAL CU. FT		REVISION
Class "S" f'c=3000							
Parapet "A"	1.500	0.920	160.000	1	2	442	
Curb "B"	0.750	1.250	160.000	1	2	300	
						742 / 27=27 c. y.	
Class "S" f'c=4500							
Deck "C"	0.542	41.333	160.000	1	1	3,584	
Girders-Inter. "D"	3.167	1.167	48.000	7	2	2,484	
Girders-ends "D"	3.167	1.167	25.080	7	2	1,298	
Diaph. @abut. "E"	2.250	1.292	37.170	1	2	216	
Diaph.-Inter. "E"	2.167	0.833	4.830	6	2	105	
						7,687 / 27 c. y. = 285 c. y.	

ROUND TO NEAREST CUBIC FOOT.

CARRY TO THREE DECIMAL PLACE ACCURACY.

ROUND TO NEAREST CUBIC YARD (TO BE COMPARED WITH CHECK SET).

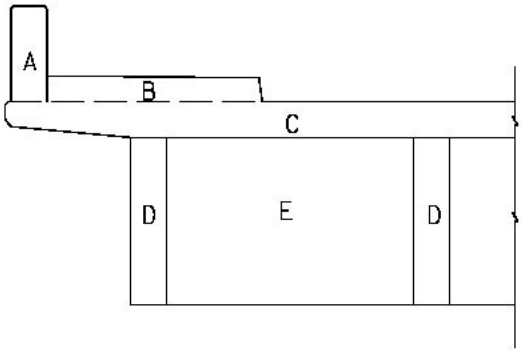

IT IS RECOMMENDED THAT SMALL SKETCHES BE DRAWN OF PARTS BEING FIGURED.

Bid Item Numbers for concrete quantities vary based on the specific concrete strength. If a concrete strength not shown is required, Bid Item Number 6010010 should be used. A list of Bid Item Numbers, Items and Units for various concrete strengths follows:

ITEM NO.	ITEM	UNIT
6010001	STRUCTURAL CONCRETE (CLASS S) (F'c=2500PSI)	CY
6010002	STRUCTURAL CONCRETE (CLASS S) (F'c=3000PSI)	CY
6010003	STRUCTURAL CONCRETE (CLASS S) (F'c=3500PSI)	CY
6010004	STRUCTURAL CONCRETE (CLASS S) (F'c=4000PSI)	CY
6010005	STRUCTURAL CONCRETE (CLASS S) (F'c=4500PSI)	CY
6010006	STRUCTURAL CONCRETE (CLASS S) (F'c=5000PSI)	CY
6010007	STRUCTURAL CONCRETE (CLASS S) (F'c=5500PSI)	CY
6010010	STRUCTURAL CONCRETE (CLASS S) (F'c=)	CY

Reinforcing Steel

The total accumulated figure for each listed Item (Abutment, Pier, Superstructure, etc.) used for reinforcing steel in the approximate quantities table is rounded to the nearest 5 pounds.

The following items are omitted from reinforcing steel weights:

- Round smooth bars or bolts.
- Reinforcing in piles or reinforcing extending into abutments or piers from piles or drilled shafts. For reinforcing transitioning from a drilled shaft to a column refer to Drilled Shafts Section.
- Reinforcement not shown on the project drawings required for anchorage zone recess blocks, duct ties and grillage assemblies as recommended by the post-tensioning system used.

The length of each item of reinforcement not detailed on the drawings is figured to the nearest 3 inches. An amount of 2 feet is added for any lap not detailed. A lap is figured for every 40 running feet of bar. As an example, a bar required to be 90 feet in length would have a length of 4 feet added to it for 2 laps unless detailed for 46 feet or more. For lapped ends of loops, a total of 8 inches is considered adequate for all sizes of bars. Section 5, Table 1, 2 and 3 give the additional length of bar needed for end hooks on stirrups, dowels, etc. according to the size of the bars in consideration. Table 3, below, is given for the weights of standard deformed reinforcing bars.

TABLE 3
WEIGHTS IN LBS OF DEFORMED REINFORCING BARS

SIZE	#2	#3	#4	#5	#6	#7
WEIGHT	.167	.376	.668	1.043	1.502	2.044
SIZE	#8	#9	#10	#11	#14	#18
WEIGHT	2.670	3.400	4.303	5.313	7.65	13.60

A special Table 4, shown below, is given for weight of ½" diameter spiral reinforcing for round concrete columns according to the diameter, cover and pitch.

TABLE 4
WEIGHTS OF ½" SPIRALS PER VERTICAL FOOT

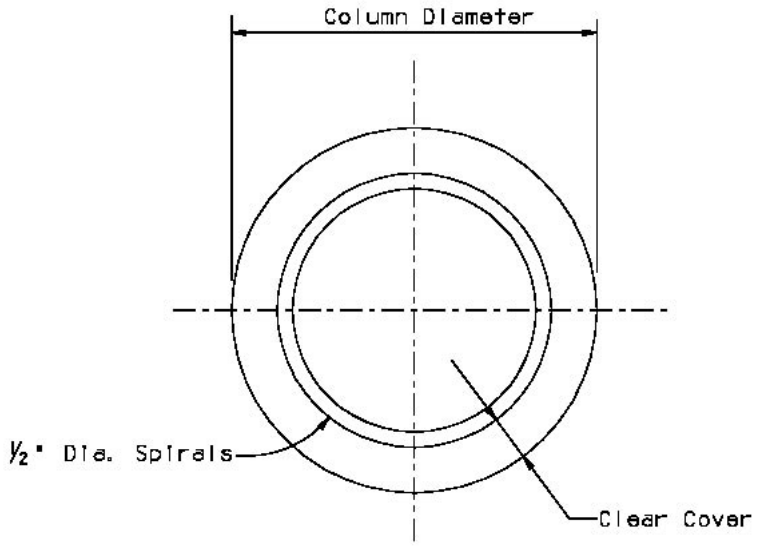

Col. Dia. (Ft.)	Clear Cover (inches)	Pitch (inches)								
		3	3 ½	4	4 ½	5	5 ½	6	9	12
7'-0	2	55.6	47.7	41.7	37.1	33.4	30.3	27.8	18.6	14.1
	3	54.2	46.5	40.7	36.1	32.5	29.6	27.1	18.2	13.7
	6	50.0	42.9	37.5	33.3	30.0	27.1	25.0	16.8	12.7
6'-6	2	51.4	44.1	38.6	34.3	30.8	28.0	25.7	17.3	13.0
	3	50.0	42.9	37.5	33.3	30.0	27.1	25.0	16.8	12.7
	6	45.8	39.3	34.4	30.5	27.5	25.0	22.9	15.4	11.6
6'-0	2	47.2	40.5	35.4	31.5	28.3	25.8	23.6	15.9	12.0
	3	45.8	39.3	34.4	30.5	27.5	25.0	22.9	15.4	11.6
	6	41.6	35.7	31.2	27.7	25.0	22.7	20.8	14.0	10.6
5'-6	2	43.0	36.9	32.3	28.7	25.8	23.5	21.5	14.5	11.0
	3	41.6	35.7	31.2	27.7	25.0	22.7	20.8	14.0	10.6
	6	37.4	32.1	28.1	24.9	22.5	20.4	18.7	12.6	9.6
	2	38.8	33.3	29.1	25.9	23.3	21.2	19.4	13.1	9.9

5’-0	3	37.4	32.1	28.1	24.9	22.5	20.4	18.7	12.6	9.6
	6	33.2	28.5	24.9	22.2	19.9	18.1	16.6	11.3	8.6
	2	34.6	29.7	26.0	23.1	20.8	18.9	17.3	11.7	8.9
4’-6	3	33.2	28.5	24.9	22.2	19.9	18.1	16.6	11.3	8.6
	6	29.0	24.9	21.8	19.4	17.4	15.8	14.5	9.9	7.6
	2	30.4	26.1	22.8	20.3	18.3	16.6	15.2	10.4	7.9
4’-0	3	29.0	24.9	21.8	19.4	17.4	15.8	14.5	9.9	7.6
	6	24.8	21.3	18.6	16.6	14.9	13.5	12.4	8.6	6.6
	2	26.2	22.5	19.7	17.5	15.7	14.3	13.1	9.0	6.9
3’-6	3	24.8	21.3	18.6	16.6	14.9	13.5	12.4	8.6	6.6
	6	20.6	17.7	15.5	13.8	12.4	11.3	10.3	7.2	5.6
	2	22.0	18.9	16.5	14.7	13.2	12.0	11.0	7.6	5.9
3’-0	3	20.6	17.7	15.5	13.8	12.4	11.3	10.3	7.2	5.6
	6	16.4	14.1	12.3	11.0	9.9	9.0	8.2	5.9	4.6
	2	17.8	15.3	13.4	11.9	10.7	9.7	8.9	6.3	4.9
2’-6	3	16.4	14.1	12.3	11.0	9.9	9.0	8.2	5.9	4.6
	6	12.2	10.5	9.2	8.2	7.3	6.7	6.1	4.6	3.7
	2	13.6	11.7	10.2	9.1	8.2	7.4	6.8	5.0	4.0
2’-0	3	12.2	10.5	9.2	8.2	7.3	6.7	6.1	4.6	3.7
	6	8.0	6.9	6.0	5.4	4.8	4.4	4.0	3.5	3.0

Special attention is called to the sample approximate quantities for weights on Table 5, which shows the required accuracy for computation of reinforcing weights. As illustrated in the sample, a short description of the item being figured will be beneficial for comparing quantities between estimator and checker.

Quantities for epoxy coated reinforcing steel shall be separated from regular reinforcing steel quantities. A list of Bid Item Numbers, Items and Units for reinforcing steel follows:

ITEM NO.	ITEM	UNIT
6050002	REINFORCING STEEL	LB
6050012	REINFORCING STEEL (EPOXY COATED)	LB

Structural Steel

The total figure for structural steel as entered in the approximate quantities table under the item “Superstructure” is to be rounded to the nearest 5 pounds. The degree of accuracy required in computing this total is outlined on Table 6, titled “Sample Approximate Quantities for Structural Steel”.

Structural steel weights are not figured for concrete structures; that is, structures that are dependent on reinforced or prestressed concrete slabs, girders or beams for their load carrying capacity. The cost of structural steel for these structures is included in the price bid for the concrete or other items.

TABLE 5
SAMPLE APPROXIMATE QUANTITIES FOR REINFORCING STEEL

ARIZONA DEPARTMENT OF TRANSPORTATION
APPROXIMATE QUANTITIES

TRACS NO. _____ **SHEET** 2 **OF** 3
STATION _____ **STRUCTURE NAME** NORTHERN AVE. UP **NB/EB** ☒ **SB/WB** ☐ **DATE** 3-15-01
PROJ. NO.: I-10-4(24) **BY** ABC **CHKD** DEF.
REINF. STEEL ☐ **STRUCT. STEEL** ☐ **FOR** **Abutment #1**

ITEM DESCRIPTION	UNIT SIZE	UNIT WEIGHT (PER FT)	UNIT LENGTH (FT)	NO OF UNIT (PER ITEM)	NO OF ITEMS	TOTAL WEIGHT	TOTAL REVISION
Cap beam long.	#5	1.043	40.75	11	1	468	
Back wall long.	#4	.668	38.00	8	1	203	
Hoops in cap	#4	.668	13.00	37	1	321	
Back wall verticals	#4	.668	4.00	76	1	203	
					Subtotal	1,195	
Wing cap long.	#5	1.043	12.00	6	2	150	
Hoop in wing cap	#4	.668	10.75	7	2	101	
Wing long.	#5	1.043	9.50	12	2	238	
Wing long.	#4	.668	9.50	8	2	96	
Wing stirrups	#4	.668	15.00	11	2	220	
Parapet verticals	#4	.668	4.25	22	2	126	
					Subtotal	931	
STANDARD WEIGHT FROM TABLE 4							
					Total	2,126	
ROUND TO NEAREST 3 INCHES UNLESS DETAILED ON PLANS					Use	2,125 lbs.	
				ROUND TOTAL TO NEAREST 5 LBS.			

TABLE 6
SAMPLE APPROXIMATE QUANTITIES FOR STRUCTURAL STEEL

ARIZONA DEPARTMENT OF TRANSPORTATION
APPROXIMATE QUANTITIES

TRACS NO.: **SHEET** ____ **OF** ____

STATION 623+ **STRUCTURE NAME** _____ **NB/EB** **SB/WB** **DATE** _____ **BY** ____ **CHKD** ____

PROJ. NO. : I-10-4(24)

REINF. STEEL ☐ STRUCT STEEL ☐ **FOR** _____

ITEM DESCRIPTION	UNIT SIZE	UNIT WEIGHT (PER FT)	UNIT LENGTH (FT)	NO OF UNITS (PER ITEM)	NO OF ITEMS	TOTAL	
						WEIGHT	REVISION
Main Girders	W36x135	135	247.16	5	1	166,833	
Cover PL@Pier #1&#3	PL 3/8x11	14.00	13.00	2	10	3,640	
Cover PL@Pier #1&#3	Ends	9.56	1.50	2	20	574	
Cover PL@Pier #2	PL 5/8x11	23.40	16.00	2	5	3,744	
Cover PL@Pier #2	Ends	15.90	1.50	2	10	477	
Splices	PL ½x11½	19.60	2.54	2	20	1,992	
Bolts in Splices	7/8 ϕ	.924		94	20	1,737	
Welds for Cover PL	5/16"Fillet	.166	204	1	5	169	
					Subtotal	183,622	
Shear Connector							
Studs	¾"ϕx4"	.615				415	
					Subtotal	415	
Stiff PL	PL ½ x5	8.5	2.83	20	1	481	
Welds for above	5/16"Fillet	.166	7.78	114	1	147	
Diaphragms	[18x42.7	42.7	7.0	8	1	2,391	
Diaphragms	[15x33.9	33.9	7.00	44	1	10,441	
Bolts for above	7/8"ϕ	1.101		114	8	1,004	
Stiff PL	PL ¾x5	12.80	2.80	30	1	1,086	
Stiff PL	PL 3/8x5	6.38	2.83	8	8	1,155	
Exp Joint	3x3x3/8	7.20	28.00	2	2	806	
Anchors for above	5/8ϕ	1.33	29.00	1	2	77	
Welds	¼ Fillet	.106	29.00	.167	4	2	
					Subtotal	885	
			Round TOTAL TO		**Total**	201,629	Lbs.
			NEAREST 5 LBS. →		**Use**	201,630	Lbs.

Listed below are the items which are to be included or excluded in the total of structural steel:

Inclusion List for Structural Steel

1. Structural steel for use in bridge structures consists of rolled shapes, plate girders, shear connectors, plates, bars, angles and other items as defined in this inclusion list. Areas and weights of steel sections amy be found in the A.I.S.C. Manual of Steel Construction. As shown in the A.I.S.C. Manual, the weight of rolled beams is given in pounds per linear foot. In figuring weight for welded plate girders, it is necessary that each plate differing in width, thickness or length be listed separately. The weight of plates greater than 36 inches in width should be increased by a percentage of the basic weight according to Table7 below. This is to allow for the A.S.T.M. permissible overrun of plates.

TABLE 7
STRUCTURAL STEEL PLATE WEIGHT INCREASE
EXPRESSED IN PERCENTAGE OF NOMINAL WEIGHT

Specified Thickness Inches	Over 36 to 48 Incl	Over 48 to 60 excl	60 to 70 excl	72 to 84 excl	84 to 96 excl	96 to 108 excle	108 to 120 excl	120 to 132 excl	132 to 144 excl	144 to 168 excl	168 and over
3/16 to ¼ excl		4	4.5	5	6	7	8	9			
¼ to 5/16 "	3	3.5	4	4.5	5	6	7	8	9.5		
5/16 to 3/8 "	2.5	3	3.5	4	4.5	5	6	7	8	9.5	
3/8 to 7/16 "	2.3	2.5	3	3.5	4	4.5	5	6	7.5	8	9
7/16 to ½ "	2	2.3	2.5	3	3.5	4	4.5	5	6.5	7	8
½ to 5/8 "	2	2	2.3	2.5	3	3.5	4	4.5	5.5	6	6
5/8 to ¾ "	2	2	2	2.3	2.5	3	3.5	4	4.5	5	6
¾ to 1 "	1.8	2	2	2	2.3	2.5	3	3.5	4	4.5	5.5
1 to 2 Incl.	1.8	1.8	2	2	2	2.3	2.5	3	3.5	4	4.5

TABLE 8
WEIGHT OF STUD SHEAR CONNECTORS

Stud Diameter	Weight in pounds per 100 studs having in-place length of				
	3 in.	4 in.	5 in.	6 in.	7 in.
½	21.0	27.0	33.0	45.0	39.0
5/8	33.6	43.2	52.8	72.0	62.4
¾	49.0	61.5	74.0	99.0	86.5
7/8	64.0	81.0	98.0	132.0	115.0

2. BOLTS - All fasteners shall be high-strength bolts, AASHTO M164 (ASTM A325) or AASHTO M253(ASTM A490). Weights of components, including washers, may be found in the A.I.S.C. Manual of Steel Construction. Add 3% if galvanized.

3. WELDS - The weight of fillet welds shall be included in the weight of structural steel. In Table 9 below, a weight per linear foot is given for different sizes of fillet welds. For butt welds, plug welds, etc. no addition or deduction is made for weight calculations.

TABLE 9
WEIGHT IN LBS OF WELDS PER LINEAR FOOT
45 degree fillet weld

SIZE	1/8	3/16	1/4	5/16	3/8	7/16	1/2	9/16
WEIGHT	.027	.060	.106	.166	.239	.326	.425	.538
SIZE	5/8	11/16	3/4	13/16	7/8	15/16	1”	
WEIGHT	.664	.804	.956	1.12	1.30	1.50	1.70	

4. The weight of deck drains should be included in the weight of structural steel for the deck.

Exclusion List for Structural Steel

1. Erection bolts.
2. Pedestrian rail and accessories.
3. Bumper (nose) angles for approach slabs.
4. Steel “H” piling or steel encased in concrete piles.
5. Fabricated steel supports or strengthened sections for erection.
6. Deck joint assemblies.
7. Abutment and pier steel bearings.

Structural Steel (Miscellaneous)

All other structural steel items including rockers, rollers, bearing plates, pins and nuts, plates, shapes for bridge sign supports, corresponding weld metal, nuts and bolts, and similar steel items not covered in other contract items will be measured for payment as structural steel (miscellaneous).

Quantities should be separated by grade for structural steel. For steel bridges, A36 steel should be listed under Item No. 6040001 while other grades should be listed under Item No. 6040002 with the appropriate grade filled in with the parenthesis. Structural steel weights are not figured for concrete structures. A list of Bid Item Numbers, Items and units for various structural steel follows:

ITEM NO.	ITEM	UNIT
6040001	STRUCTURAL STEEL	LB
6040002	STRUCTURAL STEEL ( )	LB
6040003	STRUCTURAL STEEL (MISC)	LB

Structural Excavation

Each amount of structural excavation as shown in the approximate quantities table for items such as abutments and piers is to be rounded to the nearest 5 cu. Yds.

Structural excavation limits for piers are bounded on the sides by vertical planes 1'-6" outside the limits of the footing, by the ground line on the top and the bottom of the footing on the bottom. When neat line excavation is called for on the plans or by the standard, the volume not excavated shall be deducted from the above.

Structural excavation for abutments is figured with the same limits as described for pier excavation. In many instances abutments are built on approach fills. The depth of structural excavation into the approach fill is figured from the berm elevation to the bottom of the abutment cap beam and no neat line excavation is figured.

For pier footings and abutment cap beams on piles, do not use neat line excavation.

Excavation for abutment wings has the same 1'-6" limit as the main cap beam and neat line excavation where applicable.

Figure 10, Structural Excavation Payment Limits, is shown for typical conditions. Actual payment limits for each structure shall be included with the structure drawings.

A list of Bid Item Numbers, Items and Units for structural excavation follows:

ITEM NO.	ITEM	UNIT
2030501	STRUCTURAL EXCAVATION	CY

Structure Backfill

Each amount of structure backfill as shown in the approximate quantities table for items such as abutments and piers is to be rounded to the nearest 5 cubic yards.

Structure backfill for abutments is figured as follows:

When an abutment falls below the existing ground level, structure backfill is figured within structural excavation limits on the approach slab side of the abutment only. When an abutment is built above the existing ground level, an additional area under the

approach slab is added. Measuring is to be parallel to the centerline of the roadway. The abutment wings enclose this area.

Structure backfill is required for piers only when the pier falls within the roadway prism. When the roadway is on one side of a pier only, structure backfill is figured only on the side of the pier. Figure 11, Structure Backfill Payment Limits, is shown for typical conditions. Actual payment limits for each structure shall be included with the structure drawings.

A list of Bid Item Numbers, Items and Units for structure backfill follows:

ITEM NO.	**ITEM**	**UNIT**
2030506	STRUCTURE BACKFILL	CY

FIGURE 10

STRUCTURAL EXCAVATION PAYMENT LIMITS.

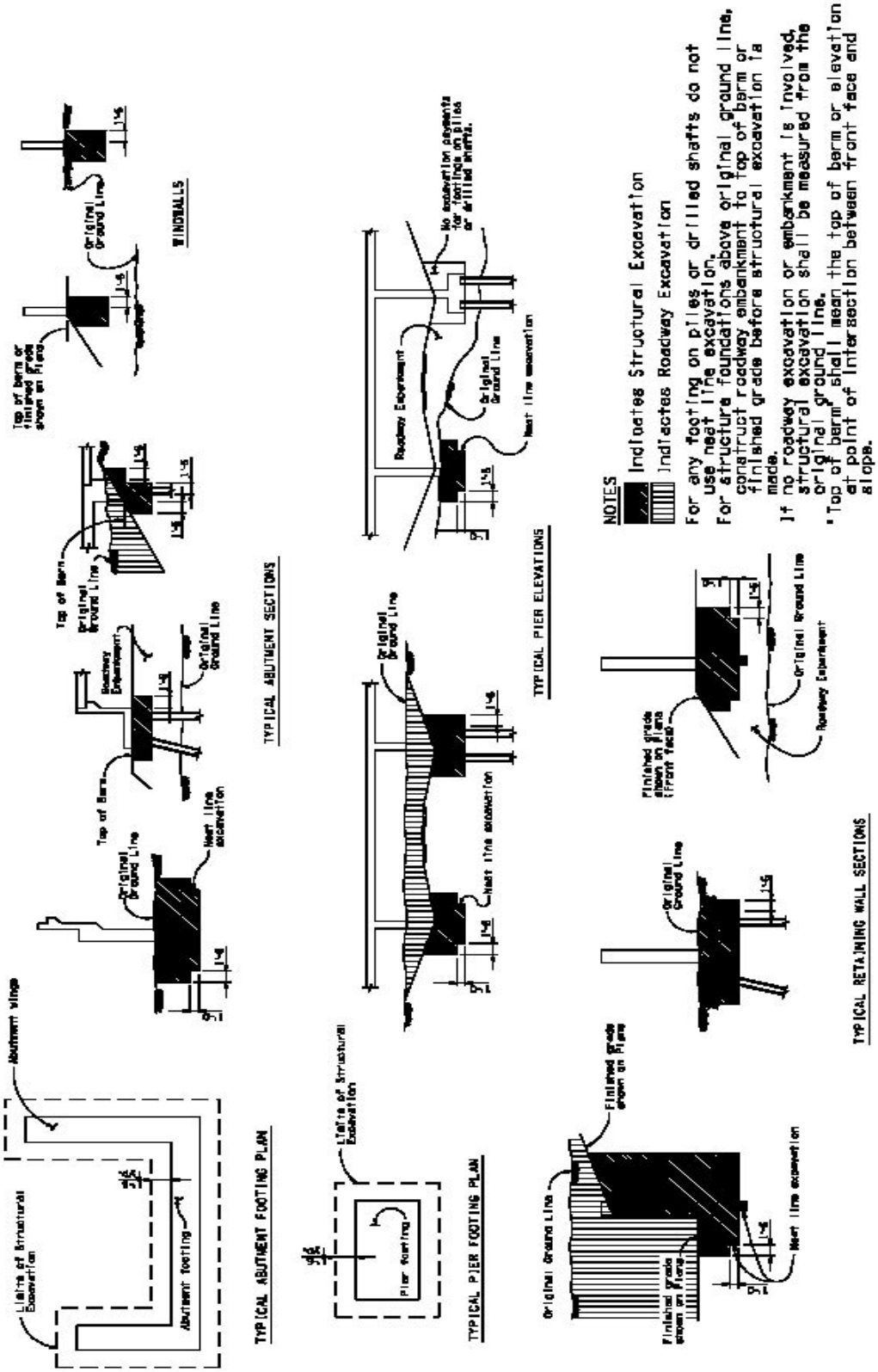

FIGURE 11
STRUCTURE BACKFILL PAYMENT LIMITS.

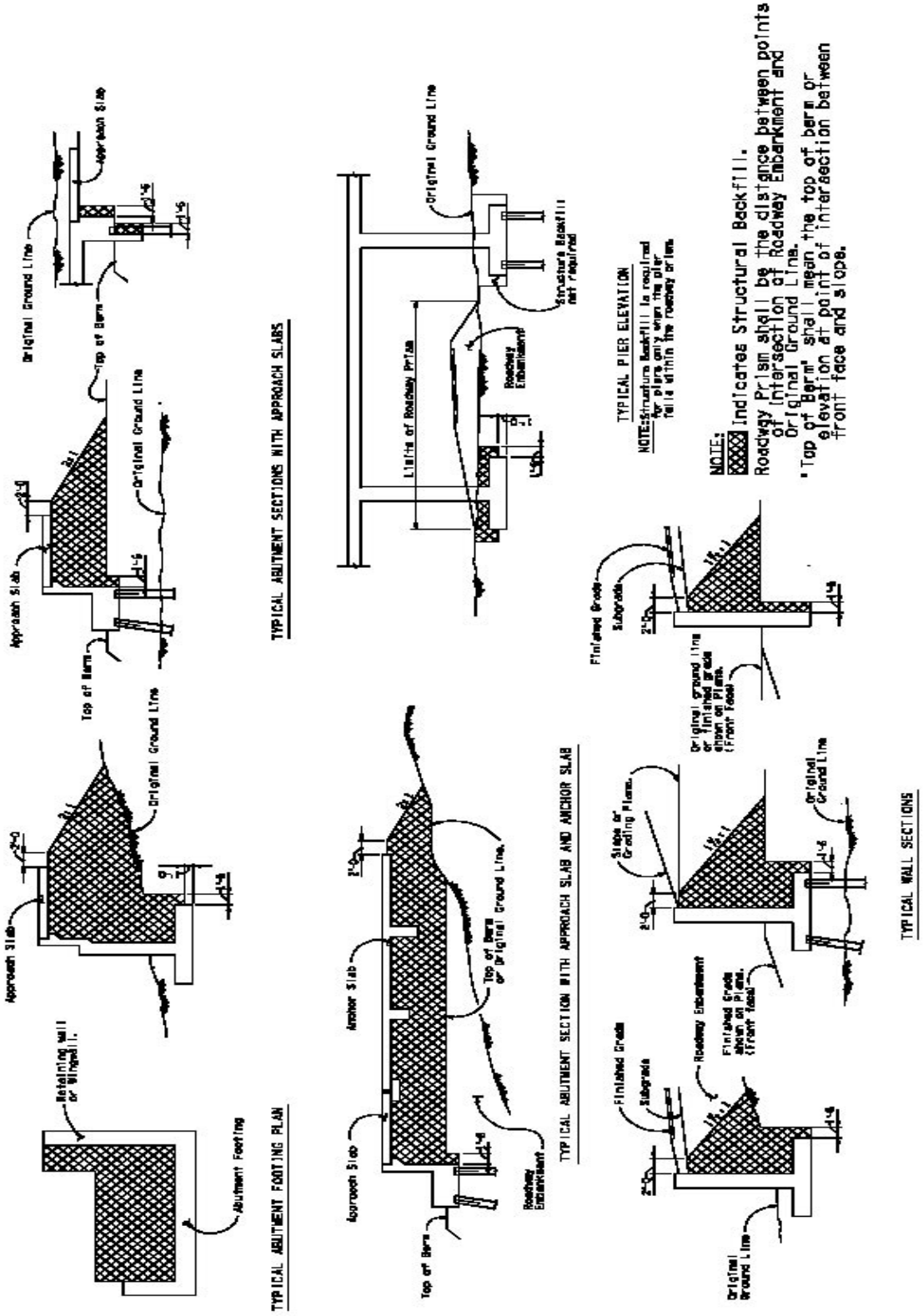

Drilled Shafts

Drilled shafts are bid by the linear foot. The item for drilled shafts includes the drilling, any casing, the concrete and all reinforcing steel embedded in the shaft. Quantities are rounded to the nearest foot for each sub item such as abutments and piers. Quantities are figured separately for each size and separated into two categories: drilled shafts drilled into rock and drilled shafts drilled into soil. Standard sizes are listed below. For special size shafts use Item Number 6090148 and fill in the specified diameter in inches within the parenthesis. For shafts in rock use Item Number 6091030 and fill in the specified diameter in inches within the parenthesis.

A list of Bid Item Numbers, Items and Units for drilled shafts follows:

ITEM NO.	ITEM	UNIT
6090018	DRILLED SHAFT FOUNDATION (18”)	LF
6090024	DRILLED SHAFT FOUNDATION (24”)	LF
6090030	DRILLED SHAFT FOUNDATION (30”)	LF
6090036	DRILLED SHAFT FOUNDATION (36”)	LF
6090042	DRILLED SHAFT FOUNDATION (42”)	LF
6090048	DRILLED SHAFT FOUNDATION (48”)	LF
6090054	DRILLED SHAFT FOUNDATION (54”)	LF
6090060	DRILLED SHAFT FOUNDATION (60”)	LF
6090066	DRILLED SHAFT FOUNDATION (66”)	LF
6090072	DRILLED SHAFT FOUNDATION (72”)	LF
6090078	DRILLED SHAFT FOUNDATION (78”)	LF
6090084	DRILLED SHAFT FOUNDATION (84”)	LF
6090096	DRILLED SHAFT FOUNDATION (96”)	LF
6090148	DRILLED SHAFT FOUNDATION ( )	LF
6091030	DRILLED SHAFTS (ROCK) ( )	LF

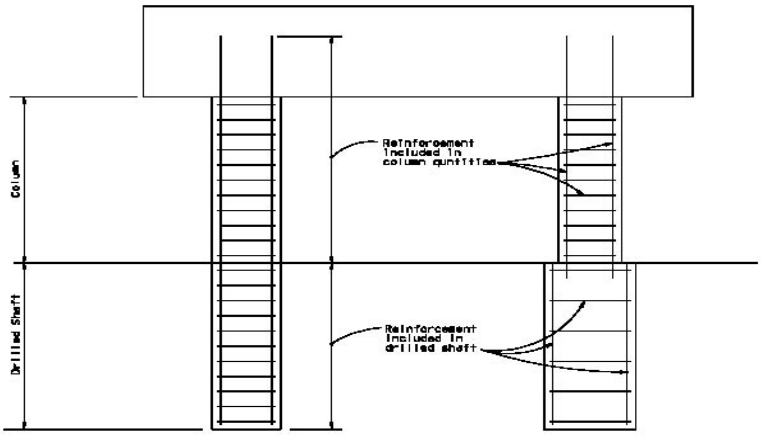

TYPICAL DRILLED SHAFTS

Driven Piles

Driven piles consist of H-piles, pipe piles and precast piles. Payment is divided into furnishing the pile, driving the pile and splicing, when required. There is no direct estimate for splicing. When an H-pile is specified other than the four sizes shown, items 6030012 and 6030194 should be used and the size placed in the parenthesis. When driven piles other than H-piles are specified, items 6030194 should be used and the type of pile used placed in the parenthesis. When piles must be driven deeper than specified on the plans to develop their strength, the contractor is paid to splice a new section onto the portion of the pile already driven. The cost equals five times the bid price for furnishing the piles. For quantity and payment purposes, two feet is added to the estimated length of a pile. Refer to Figure 12 for a diagram.

A list of Bid Item Numbers, Items and Units for driven piles follows:

ITEM NO.	ITEM	UNIT
6030003	FURNISHING PILES (STEEL) (HP12x53)	LF
6030005	FURNISHING PILES (STEEL) (HP12x74)	LF
6030008	FURNISHING PILES (STEEL) (HP14x89)	LF
6030010	FURNISHING PILES (STEEL) (HP14x117)	LF
6030012	FURNISH HP PILES	LF
6030013	FURNISH PILES ( )	LF
6030190	DRIVE HP 12 x 53 PILES	LF
6030191	DRIVE UP 12 x 74 PILES	LF
6030192	DRIVE HP 14 x 89 PILES	LF
6030193	DRIVE HP 14 x 117 PILES	LF
6030194	DRIVE HP PILES ( )	LF
6030195	DRIVE PILES ( )	LF
6030303	SPLICING PILE STEEL (5 TIMES UNIT PRICE OF 6030003)	EA
6030305	SPLICING PILE STEEL (5 TIMES UNIT PRICE OF 6030005)	EA
6030308	SPLICING PILE STEEL (5 TIMES UNIT PRICE OF 6030008)	EA
6030310	SPLICING PILE STEEL (5 TIMES UNIT PRICE OF 6030010)	EA
6030312	SPLICING PILE STEEL (5 TIMES UNIT PRICE OF 6030012)	EA
6030313	SPLICING PILE (5 TIMES UNIT PRICE OF 6030013)	EA

FIGURE 12
LENGTH OF PILING

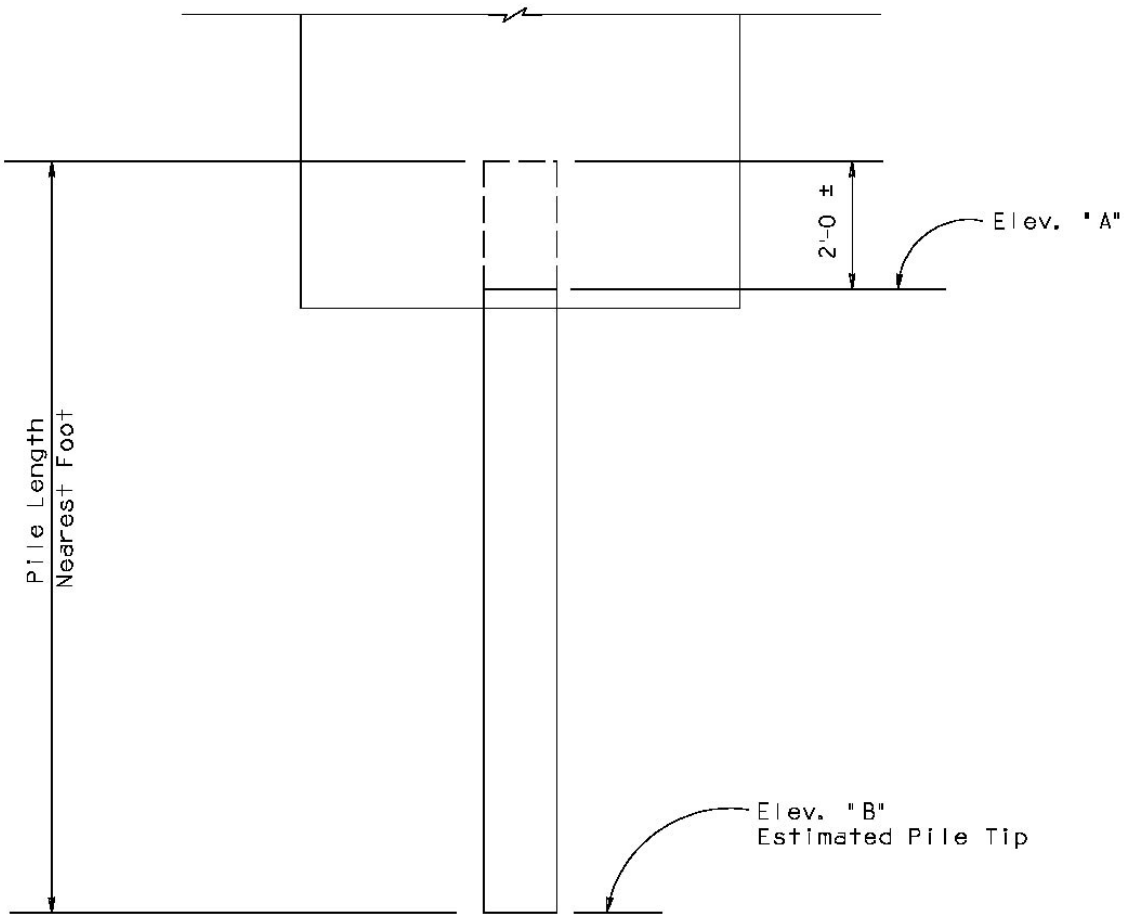

Length = (Elev. "A" - Elev. "B") + 2'-0 (To nearest zero)

Precast Prestressed Concrete Members

Precast prestressed concrete members consist of AASHTO standard or modified I-girders, box beams and voided slabs. The bid items are calculated by the linear foot. The total sum of the lengths of all girders are rounded to the nearest foot. The bid item includes reinforcing, concrete, prestressing strand, anything else embedded in the girder and also includes transportation and erection in place.

A list of Bid Item Numbers, Items and Units for these members follows:

ITEM NO.	ITEM	UNIT
6014950	PRECAST, P/S MEMBER (AASHTO TYPE 2 GIRDER)	LF
6014951	PRECAST, P/S MEMBER (AASHTO TYPE 3 GIRDER)	LF
6014952	PRECAST, P/S MEMBER (AASHTO TYPE 4 GIRDER)	LF
6014953	PRECAST, P/S MEMBER (AASHTO TYPE 5 GIRDER)	LF
6014954	PRECAST, P/S MEMBER (AASHTO TYPE 6 GIRDER)	LF
6014955	PRECAST, P/S MEMBER (AASHTO TYPE 5 MOD. GR.)	LF
6014956	PRECAST, P/S MEMBER (AASHTO TYPE 6 MOD. GR.)	LF
6014957	PRECAST, P/S MEMBER (BOX BEAM TYPE BI-36)	LF
6014958	PRECAST, P/S MEMBER (BOX BEAM TYPE BII-36)	LF
6014959	PRECAST, P/S MEMBER (BOX BEAM TYPE BIII-36)	LF
6014960	PRECAST, P/S MEMBER (BOX BEAM TYPE BIV-36)	LF
6014961	PRECAST, P/S MEMBER (BOX BEAM TYPE BI-48)	LF
6014962	PRECAST, P/S MEMBER (BOX BEAM TYPE BII-48)	LF
6014963	PRECAST, P/S MEMBER (BOX BEAM TYPE BII-48)	LF
6014964	PRECAST, P/S MEMBER (BOX BEAM TYPE BIV-48)	LF
6014965	PRECAST, P/S MEMBER (VOIDED SLAB TYPE SI-36)	LF
6014966	PRECAST, P/S MEMBER (VOIDED SLAB TYPE SII-36)	LF
6014967	PRECAST, P/S MEMBER (VOIDED SLAB TYPE SII-36)	LF
6014968	PRECAST, P/S MEMBER (VOIDED SLAB TYPE SIV-36)	LF
6014969	PRECAST, P/S MEMBER (VOIDED SLAB TYPE SI-48)	LF
6014970	PRECAST, P/S MEMBER (VOIDED SLAB TYPE SII-48)	LF
6014971	PRECAST, P/S MEMBER (VOIDED SLAB TYPE SIII-48)	LF
6014972	PRECAST, P/S MEMBER (VOIDED SLAB TYPE SIV-48)	LF
6014973	PRECAST, P/S MEMBER ( )	LF

Miscellaneous Items

A list of miscellaneous Bid Item Numbers, Items and Units follows:

ITEM NO.	ITEM	UNIT
2020002	REMOVE BRIDGE	LUMP SUM
2020008	REMOVAL OF STRUCTURAL CONCRETE	LUMP SUM
2020009	REMOVAL OF STRUCTURAL CONCRETE	CY
6010501	BRIDGE REPAIR	LUMP SUM
6010801	BRIDGE DECK DRAIN ASSEMBLY	LS
6010831	GROOVE BRIDGE DECK	SQ YD
6011130	32 IN. F-SHAPE BRIDGE CONCRETE BARRIER AND TRANSITION (SD 1.01)	LF
6011131	42 IN. F-SHAPE BRIDGE CONCRETE BARRIER AND TRANSITION (SD 1.02)	LF
6011132	COMBINATION PEDESTRIAN-TRAFFIC BRIDGE RAILING (SD 1.04)	LF
6011133	PEDESTRIAN FENCE FOR BRIDGE RAILING SD 1.04 (SD 1.05)	LF
6011134	TWO TUBE BRIDGE RAIL (SD 1.06)	LF
6011371	APPROACH SLAB (SD 2.01)	SF
6011372	ANCHOR SLAB-TYPE 1 (SD 2.02)	SF
6011373	ANCHOR SLAB-TYPE 2 (SD 2.03)	SF
6015101	RESTRAINERS, VERTICAL EARTHQUAKE (FIXED)	EA
6015102	RESTRAINERS, VERTICAL EARTHQUAKE(EXPANSION)	EA
6015200	HIGH-LOAD MULTI-ROTATIONAL BEARINGS	EA
6020001	PRESTRESSING CAST-IN-PLACE CONCRETE	LS
6041001	JACKING BRIDGE SUPERSTRUCTURE	LUMP SUM
6050101	PLACE DOWELS	EA
6050201	LOAD TRANSFER DOWELS	EA
6060040	BRIDGE SIGN STRUCTURE (TUBULAR) (40' TO 70')	EA
6060041	BRIDGE SIGN STRUCTURE (TUBULAR) (70' TO 94')	EA
6060042	BRIDGE SIGN STRUCTURE (TUBULAR) (94' TO 106')	EA
6060043	BRIDGE SIGN STRUCTURE (TUBULAR) (106' TO 130')	EA
6060044	BRIDGE SIGN STRUCTURE (TUBULAR) (130' TO 142')	EA
6060045	TUBULAR FRAME SIGN STRUCTURE (TYPE 1F) (SD 9.20)	EA
6060046	TUBULAR FRAME SIGN STRUCTURE (TYPE 2F) (SD 9.20)	EA
6060047	TUBULAR FRAME SIGN STRUCTURE (TYPE 3F) (SD 9.20)	EA
6060048	TUBULAR FRAME SIGN STRUCTURE (TYPE 4F) (SD 9.20)	EA
6060075	FOUNDATION FOR TUBULAR FRAME SIGN STRUCTURE (TYPE 1F) (SD 9.20)	EA
6060076	FOUNDATION FOR TUBULAR FRAME SIGN STRUCTURE (TYPE 2F) (SD 9.20)	EA

6060078	FOUNDATION FOR TUBULAR FRAME SIGN STRUCTURE (TYPE 3F) (SD 9.20)	EA
6060079	FOUNDATION FOR TUBULAR FRAME SIGN STRUCTURE (TYPE 4F) (SD 9.20)	EA
6060131	TUBULAR CANTILEVER SIGN STRUCTURE (TYPE 1C) (SD 9.10)	EA
6060132	TUBULAR CANTILEVER SIGN STRUCTURE (TYPE 2C) (SD 9.10)	EA
6060133	TUBULAR CANTILEVER SIGN STRUCTURE (TYPE 3C) (SD 9.10)	EA
6060134	TUBULAR CANTILEVER SIGN STRUCTURE (TYPE 4C) (SD 9.10)	EA
6060161	SIGN STRUCTURE (MEDIAN, TWO SIDED) (SD 9.01)	EA
6060162	SIGN STRUCTURE (MEDIAN, ONE SIDED) (SD 9.02)	EA
6060247	FOUNDATION FOR SIGN STRUCTURE (MEDIAN) (SD 9.01 OR SD 9.02)	EA
6060254	FOUNDATION FOR TUBULAR CANTILEVER SIGN STRUCTURE (TYPE 1C) (SD 9.10)	EA
6060255	FOUNDATION FOR TUBULAR CANTILEVER SIGN STRUCTURE (TYPE 2C) (SD 9.10)	EA
6060256	FOUNDATION FOR TUBULAR CANTILEVER SIGN STRUCTURE (TYPE 3C) (SD 9.10)	EA
6060257	FOUNDATION FOR TUBULAR CANTILEVER SIGN STRUCTURE (TYPE 4C) (SD 9.10)	EA
6100001	PAINTING STRUCTURAL STEEL	LUMP SUM
6100011	PAINT BRIDGE	LUMP SUM
7320471	BRIDGE JUNCTION BOX	EA
7379111	VARIABLE MESSAGE SIGN ASSEMBLY INSTALLATION	EA
9050430	THRIE BEAM GUARD RAIL TRANSITION SYSTEM (SD 1.03)	EA
9100008	CONCRETE BARRIER (TEMPORARY BRIDGE)	LF
9120001	SHOTCRETE	SQ YD
9140136	SOUND BARRIER WALL (CONCRETE) (SD 8.01)	SF
9140137	SOUND BARRIER WALL (MASONARY) (SD 8.02)	SF
9210001	SLOPE PAVING (STD. B-19.20 AND B-19.21)	SQ YD

Arizona Department of Transportation
Bridge Group

BRIDGE PRACTICE GUIDELINES

SECTION 2 - GENERAL DESIGN & LOCATION FEATURES

Chapter	Page	Issue Date
SCOPE	2	10/22/99
DEFINITIONS	2	10/22/99
LOCATION FEATURES	4	10/22/99
Route Location	4	10/22/99
Bridge Site Arrangement	5	10/22/99
Clearances	6	10/22/99
Environment	9	10/22/99
FOUNDATION INVESTIGATION	9	10/22/99
General	9	10/22/99
Topographic Studies	9	10/22/99
DESIGN OBJECTIVES	10	10/22/99
Safety	10	10/22/99
Serviceability	10	10/22/99
Constructibility	14	10/22/99
Economy	15	10/22/99
Bridge Aesthetics	16	10/22/99
HYDROLOGY AND HYDRAULICS	17	10/22/99
General	17	10/22/99
Site Data	17	10/22/99
Hydrologic Analysis	18	10/22/99
Hydraulic Analysis	19	10/22/99
Deck Drainage	23	10/22/99

SCOPE

This section is intended to provide the Designer with sufficient information to determine the configuration and overall dimensions of a bridge.

In recognition that many bridge failures have been caused by scour, hydrology and hydraulics are covered in detail.

For a complete discussion of the information presented here, refer to the AASHTO LRFD Bridge Design Specifications, Section 2.

DEFINITIONS

Aggradation: A general and progressive buildup or raising of the longitudinal profile of the channel bed as a result of sediment deposition.

Bridge Designer: The design team who produced the structural drawings and supporting documents for the bridge.

Clear Zone: An unobstructed, relatively flat area beyond the edge of the traveled way for the recovery of errant vehicles. The traveled way does not include shoulders or auxiliary lanes.

Clearance: An unobstructed horizontal or vertical space.

Degradation: A general and progressive lowering of the longitudinal profile of the channel bed as a result of long-term erosion.

Design Discharge: Maximum flow of water a bridge is expected to accommodate without exceeding the adopted design constraints.

Design Flood for Bridge Scour: The flood flow equal to or less than the 100-year flood that creates the deepest scour at bridge foundations. The highway or bridge may be inundated at the stage of the design flood for bridge scour. The worst-case scour condition may occur for the overtopping flood as a result of the potential for pressure flow.

Detention Basin: A stormwater management facility that impounds runoff and temporarily discharges it through a hydraulic outlet structure to a downstream conveyance system.

Drip Groove: Linear depression in the bottom of components to cause water flowing on the surface to drop.

Five-Hundred-Year Flood: The flood due to storm and/or tide having a 0.2 percent chance of being equaled or exceeded in any given year. Commonly referred to as the Superflood, used to check the structural adequacy of bridge foundations for that extreme design event.

General or Contraction Scour: Scour in a channel or on a floodplain that is not localized at a pier or other obstruction to flow. In a channel, general/contraction scour usually affects all or most of the channel width and is typically caused by a contraction of the flow.

Hydraulics: The science that deals with practical applications (as the transmission of energy or the effects of flow) of water or other liquid in motion.

Hydrology: The science concerned with the occurrence, distribution, and circulation of water on the earth, including precipitation, runoff, and groundwater. In highway design, the process by which design discharges are determined.

Local Scour: Scour in a channel or on a floodplain that is localized at a pier, abutment, or other obstruction to flow.

One-Hundred-Year Flood: The flood due to storm and/or tide having a 1 percent chance of being equaled or exceeded in any given year.

Overtopping Flood: The flood flow that, if exceeded, results in flow over a highway or bridge, over a watershed divide, or through structures provided for emergency relief. The worst-case scour condition may be caused by the overtopping flood.

Stable Channel: A condition that exists when a stream has a bed slope and cross-section that allows its channel to transport the water and sediment delivered from the upstream watershed without significant degradation, aggradation, or bank erosion.

Stream Geomorphology: The study of a stream and its floodplain with regard to its land forms, the general configuration of its surface, and the changes that take place due to erosion and the buildup of erosional debris.

Superelevation: A tilting of the roadway surface to partially counterbalance the centrifugal forces on vehicles on horizontal curves.

Superflood: Any flood or tidal flow with a flow rate greater than that of the 100-year flood but not greater than a 500-year flood. Estimated magnitude equals 1.7 times the 100-year flood.

Watershed: An area confined by drainage divides, and often having only one outlet for discharge; the total drainage area contributing runoff to a single point.

Waterway: Any stream, river, pond, lake, or ocean.

Waterway Opening: Width or area of bridge opening at a specified stage, and measured normal to principal direction of flow.

LOCATION FEATURES

Route Location

GENERAL

The choice of location of bridges shall be supported by analyses of alternatives with consideration given to economic, engineering, social, and environmental concerns as well as costs of maintenance and inspection associated with the structures and with the relative importance of the above-noted concerns.

Attention, commensurate with the risk involved, shall be directed toward providing for favorable bridge locations that:

- Fit the conditions created by the obstacle being crossed;
- Facilitate practical cost effective design, construction, operation, inspection and maintenance;
- Provide for the desired level of traffic service and safety; and
- Minimize adverse highway impacts.

WATERWAY AND FLOODPLAIN CROSSINGS

Waterway crossings shall be located with regard to initial capital costs of construction and the optimization of total costs, including river channel training works and the maintenance measures necessary to reduce erosion. Studies of alternative crossing locations should include assessments of:

- The hydrologic and hydraulic characteristics of the waterway and its floodplain, including channel stability and flood history.
- The effect of the proposed bridge on flood flow patterns and the resulting scour potential at bridge foundations;
- The potential for creating new or augmenting existing flood hazards; and
- Environmental impacts on the waterway and its floodplain.

Bridges and their approaches on floodplains should be located and designed with regard to the goals and objectives of floodplain management, including;

- Prevention of uneconomic, hazardous, or incompatible use and development of floodplains;
- Avoidance of significant transverse and longitudinal encroachments, where practicable;
- Minimization of adverse highway impacts and mitigation of unavoidable impacts, where practicable;
- Consistency with the intent of the standards and criteria of the National Flood Insurance Program, where applicable;
- Long-term aggradation or degradation; and
- Commitments made to obtain environmental approvals

It is generally safer and more cost effective to avoid hydraulic problems through the selection of favorable crossing locations than to attempt to minimize the problems at a later time in the project development process through design measures.

Experience at existing bridges should be part of the calibration or verification of hydraulic models, if possible. Evaluation of the performance of existing bridges during past floods is often helpful in selecting the type, size, and location of new bridges.

Bridge Site Arrangement

GENERAL

The location and the alignment of the bridge should be selected to satisfy both on-bridge and under-bridge traffic requirements. Consideration should be given to possible future variations in alignment or width of the waterway, highway, or railway spanned by the bridge.

Where appropriate, consideration should be given to future addition of mass-transit facilities or bridge widening.

TRAFFIC SAFETY

Protection of structures

Consideration shall be given to safe passage of vehicles on or under a bridge. The hazard to errant vehicles within the clear zone should be minimized by locating obstacles at a safe distance from the travel lanes.

Pier columns or walls for grade separation structures should be located in conformance with the clear zone concept as contained in Chapter 3 of the AASHTO Roadside Design Guide. Where the practical limits of structure costs, type of structure, volume and design speed of through traffic, span arrangement, skew, and terrain make conformance with the Roadside Design Guide impractical, the pier or wall should be protected by the use of guardrail or other barrier devices. The guardrail or other device should, if practical, be independently supported, with its roadway face at least 2.0 FT from the face of pier or abutment, unless a rigid barrier is provided. The intent of providing structurally independent barriers is to prevent transmission of force effects from the barrier to the structure to be protected.

The face of the guardrail or other device should be at least 2.0 FT outside the normal shoulder line.

Protection of Users

Railings shall be provided along the edges of structures conforming to the requirements of Section 13 of AASHTO LRFD Bridge Design Specifications.

All protective structures shall have adequate surface features and transitions to safely redirect errant traffic.

Geometric Standards

Requirements of the AASHTO publication A Policy on Geometric Design of Highways and Streets shall either be satisfied or exceptions thereto shall be justified and documented. Width of travel lanes and shoulders shall meet the requirements established by the roadway engineer.

Road Surfaces

Road surfaces on a bridge shall be given antiskid characteristics, crown, drainage, and superelevation in accordance with A Policy on Geometric Design of Highways and Streets.

Clearances

NAVIGATIONAL

Permits for construction of a bridge over navigable waterways shall be obtained from the U.S. Coast Guard and/or other agencies having jurisdiction. Navigational clearances, both vertical and horizontal, shall be established in cooperation with the U.S. Coast Guard.

The Colorado River is the only navigable waterway in Arizona with U.S. Coast Guard jurisdiction. Certain reservoirs have bridges over navigable waterway passage with other agencies having jurisdiction.

VERTICAL CLEARANCE AT STRUCTURES

The following are minimum vertical clearance standards for highway traffic structures, pedestrian overpasses, railroad overpasses, tunnels and sign structures. Lesser clearances may be used only under very restrictive conditions, upon individual analysis and with the approval of the Assistant State Engineer-Roadway Group.

HIGHWAY TRAFFIC STRUCTURES

The design vertical clearance to structures passing over Freeways, State Highways and all Rural and Urban Arterials shall be at least 16'-6 over the entire roadway width, including auxiliary lanes and shoulders. An allowance of 6 inches is included to accommodate future resurfacing. This allowance may be waived if the roadway under the structure is surfaced with portland cement concrete.

The design vertical clearance to structures passing over all other highway and streets shall be at least 15'-6 over the entire roadway width, including auxiliary lanes and shoulders. An allowance of 6 inches is included to accommodate future resurfacing. This allowance may be waived if the roadway under the structure is surfaced with portland cement concrete.

Consideration should be given to providing 16'-6 clearance at interchange structures having large volumes of truck traffic and at other structures over highways carrying very high traffic volumes, regardless of the highway system classification.

PEDESTRIAN OVERPASSES

Because of their lesser resistance to impacts, the minimum design vertical clearance to pedestrian overpasses shall be 17'-6 regardless of the highway system classification. An allowance of 6 inches is included to accommodate future resurfacing.

TUNNELS

The minimum design vertical clearance for tunnels shall be at least 16'-6 for freeways, arterials and all other State Highways and at least 15'-6 for all other highways and streets.

SIGN STRUCTURES

Because of their lesser resistance to impacts, the minimum design vertical clearance to sign structures shall be 18'-0 regardless of the highway system classification. An allowance of 6 inches is included to accommodate future resurfacing.

HORIZONTAL CLEARANCE AT STRUCTURES

The bridge width shall not be less than that of the approach roadway section, including shoulders or curbs, gutters, and sidewalks.

No object on or under a bridge, other than a barrier, should be located closer than 4.0 FT to the edge of a designated traffic lane. The inside face of a barrier should not be closer than 2.0 FT to either the face of the object or the edge of a designated traffic lane.

RAILROAD OVERPASS

Structures designed to pass over a railroad shall be in accordance with standards established and used by the affected railroad in its normal practice. These overpass structures shall comply with applicable federal, state, county, and municipal laws.

Structures over railways shall provide a minimum clearance of 23 feet above top of rail, except that overhead clearance greater than 23 feet may be approved when justified on the basis of railroad electrification. No additional allowance shall be provided for future track adjustments.

Regulations, codes, and standards should, as a minimum, meet the specifications and design standards of the American Railway Engineering Association, the Association of American Railroads, and AASHTO.

Requirements of the individual railroads in Arizona are contained in regulations published by the Arizona Corporation Commission.

Attention is particularly called to the following chapters in the Manual for Railway Engineering (AREA 1991):

- Chapter 7 – Timber Structures,
- Chapter 8 – Concrete Structures and Foundations,
- Chapter 9 – Highway-Railroad Crossings,
- Chapter 15 – Steel Structures, and
- Chapter 18 – Clearances.

The provisions of the individual railroads and the AREA Manual should be used to determine:

- Clearances,
- Loadings,
- Pier protection,
- Waterproofing, and
- Blast protection.

Environment

The impact of a bridge and its approaches on local communities, historic sites, wetlands, and other aesthetically, environmentally, and ecologically sensitive areas shall be considered. Compliance with state water laws; federal and state regulations concerning encroachment on floodplains, fish, and wildlife habitats; and the provisions of the National Flood Insurance Program shall be assured. Stream geomorphology, consequences of riverbed sour, and removal of embankment stabilizing vegetation, shall be considered.

Stream, i.e., fluvial, geomorphology is a study of the structure and formation of the earth's features that result from the forces of water. For purposes of this section, this involves evaluating the stream's potential for aggradation, degradation, or lateral migration.

FOUNDATION INVESTIGATION

General

A subsurface investigation, including borings and soil tests, shall be conducted in accordance with the provisions of AASHTO to provide pertinent and sufficient information for the design of substructure units. The type and cost of foundations should be considered in the economic and aesthetic studies for location and bridge alternate selection. For bridge replacement or rehabilitation, existing geotechnical data may provide valuable information for initial studies.

Topographic Studies

Current topography of the bridge site shall be established via contour maps and photographs. Such studies shall include the history of the site in terms of movement of earth masses, soil and rock erosion, and meandering of waterways.

DESIGN OBJECTIVES

Safety

The primary responsibility of the Bridge Designer shall be providing for the safety of the public.

Serviceability

DURABILITY

Materials

The contract documents shall call for quality materials and for the application of high standards of fabrication and erection.

Structural steel shall be self-protecting, or have long-life coating systems.

Reinforcing bars and prestressing strands in concrete components, which may be expected to be exposed to airborne or waterborne salts, shall be protected by an appropriate combination of epoxy and/or composition of concrete, including air-entrainment and a nonporous painting of the concrete surface.

Prestress strands in cable ducts shall be grouted or otherwise protected against corrosion.

Attachments and fasteners used in wood construction shall be of stainless steel, malleable iron, aluminum, or steel that is galvanized, cadmium-plated, or otherwise coated. Wood components shall be treated with preservatives.

Aluminum products shall be electrically insulated from steel and concrete components.

Protection shall be provided to materials susceptible to damage from solar radiation and/or air pollution.

Consideration shall be given to the durability of materials in direct contact with soil, sun and/or water.

Self-Protecting Measures

Continuous drip grooves shall be provided along the underside of a concrete deck at a distance not exceeding 10.0 IN from the fascia edges. Where the deck is interrupted by a sealed deck joint, all top surfaces of piers and abutments, other than bearing seats, shall have a minimum slope of 5 percent toward their edges. For open deck joints, this minimum slope shall be increased to 15 percent. In the case of open deck joints, the bearings shall be protected against contact with salt and debris.

Wearing surfaces shall be interrupted at the deck joints and shall be provided with a smooth transition to the deck joint device.

INSPECTABILITY

Inspection ladders, walkways, catwalks, covered access holes, and provision for lighting, if necessary, shall be provided where other means of inspection are not practical.

Where practical, access to allow manual or visual inspection, including adequate headroom in box sections, shall be provided to the inside of cellular components and to interface areas, where relative movement may occur.

MAINTAINABILITY

Structural systems whose maintenance is expected to be difficult should be avoided. Where the climatic and/or traffic environment is such that the bridge deck may need to be replaced before the required service life, either provisions shall be shown on the contract plans for the replacement of the deck or additional structural resistance shall be provided.

Areas around bearing seats and under deck joints should be designed to facilitate jacking, cleaning, repair, and replacement of bearings and joints.

Jacking points shall be indicated on the plans, and the structure shall be designed for the jacking forces. Inaccessible cavities and corners should be avoided. Cavities that may invite human or animal inhabitants shall either be avoided or made secure.

RIDEABILITY

The deck of the bridge shall be designed to allow for the smooth movement of traffic. On paved roads, a structural transition slab should be located between the approach roadway and the abutment of the bridge. Construction tolerances, with regard to the profile of the finished deck, shall be indicated on the plans or in the specifications or special provisions.

The number of deck joints shall be kept to a practical minimum. Edges of joints in concrete decks exposed to traffic should be protected from abrasion and spalling. The plans for prefabricated joints shall specify that the joint assembly be erected as a unit, if feasible.

Where concrete decks without an initial overlay are used, an additional thickness of 0.5-IN to permit correction of the deck profile by grinding, and to compensate for thickness loss due to abrasion will be provided.

UTILITIES IN STRUCTURES

Where utility conflicts exist; water, power, telephone, cable TV and gas lines will be relocated as required for construction of the project. Where it is feasible and reasonable to locate utility lines elsewhere, attachment to structures will not be permitted. Trenching in the vicinity of existing piers or abutments shall be kept a sufficient distance from footings to prevent undercutting of existing footings or to prevent disturbing foundation soils for future foundations.

Where other locations prove to be extremely difficult and very costly, utility lines, except natural gas, may be allowed in the structures.

Natural gas encroachments will be evaluated under the following policy:

A. Cases were gas line attachments to structures will not be considered under any condition:

   1. Grade separation structures carrying vehicular traffic on or over freeways.

   2. Inside closed cell-type box girder bridges.

   3. High pressure transmission lines over 60 psi and/or distribution lines of over 6 inches in diameter.

   4. Gas lines over minor waterway crossings where burial is feasible

B. Gas line attachments on structures will be considered under the following cases or conditions:

   1. Each case will be judged on its own merit with the utilities providing complete justification as to why alternative locations are not feasible.

   2. Economics will not be a significant factor considered in the feasibility issue.

   3. Open girder type structures across major rivers.

   4. Pedestrian or utility bridges where proper vented casings and other safety systems are used.

   5. All lines are protected by casements.

Provisions for accommodation of relocated and future utilities on structures shall be coordinated through the Utility and Railroad Engineering Section for ADOT projects, or as appropriate, through Statewide Project Management Section and/or a consultant for other projects.

General Policy

Support bracket details and attachments for all utilities will require Bridge Group approval.

All approved utilities shall have individual sleeved casings, conduits or ducts as appropriate.

All utilities carrying liquids shall be placed inside casing through the entire length of the structure. The casing shall be designed to carry full service pressure so as to provide a satisfactory containment in case the utility is damaged or leaks.

Water lines, telephone conduits, power lines, cable TV lines, supports or other related items will not be permitted to be suspended below or attached to the exterior of any new or existing structure.

Product lines for transmitting volatile fluids will not be permitted to be attached to or suspended from or placed within any new or existing structure.

Manholes or access openings for utilities will not be permitted in bridge decks, webs, bottom slabs or abutment diaphragms.

On special major projects, ADOT design costs will be assessed to the company

Utility Company Responsibility

The utility company is responsible for obtaining necessary information regarding the proposed construction schedule for the project. The company shall submit a request including justification for attaching to the structure and preliminary relocation plans including line weights and support spacing as early as possible but no later than the completion of preliminary structural plans. The company shall submit complete plans and specifications of their proposed installation at least 20 working days prior to the schedule C & S Date.

The utility company shall be responsible for the design of all conduits, pipes, sleeves, casings, expansion devices, supports and other related items including the following information:

1. Number and size of conduits for power, telephone and cable TV lines.

2. Size and schedule of carrier pipe for water lines.

3. Size and schedule of sleeved casings.

4. Spacing and details of support brackets.

5. Expansion device details.

6. Total combined weight of carrier pipe and transmitted fluids, conduits, casings, support brackets, expansion joints and other related items.

7. Design calculations.

8. Submit permit request through the District.

Bridge Designer Responsibility

The Bridge Designer shall be responsible for the following aspects of the design :

1. Determination of how many lines, if any, the structure can accommodate.

2. Determination of where such lines should be located within a structure.

3. Determination of the size of the access openings and design of the required reinforcing.

4. Identification of installation obstacles related to required sequencing of project.

5. Tracking man-hours associated with utility relocations for cost recovery, when appropriate.

Usually utilities will be accommodated by providing individual access openings for casings and sleeves to pass through. Access openings should be 2 inches larger than the diameter of the casings or sleeves and spaced as required by structural considerations.

For box girder bridges, access openings should be located as low as possible but no lower than 10 inches above the top of the bottom slab to allow for support brackets to be supported from the bottom slab. Where possible all utilities shall be supported from the bottom slab for box girder bridges.

For precast or steel girder bridges, the utilities shall not be placed in the exterior girder bay and they shall be supported from the deck slab, rather than from the diaphragms.

Constructibility

Bridges should be designed in a manner such that fabrication and erection can be performed without undue difficulty or distress and that locked-in construction force effects are within tolerable limits.

When the method of construction of a bridge is not self-evident or could induce unacceptable locked-in stresses, at least one feasible method shall be indicated in the contract documents. If the design requires some strengthening and/or temporary bracing or support during erection by the selected method, indication of the need thereof shall be indicated in the contract documents.

Details that require welding in restricted areas or placement of concrete through congested reinforcing should be avoided.

Climatic and hydraulic conditions that may affect the construction of the bridge shall be considered.

Economy

GENERAL

Structural types, span lengths, and materials shall be selected with due consideration of projected cost. The cost of future expenditures during the projected service life of the bridge should be considered. Regional factors, such as availability of material, fabrication, location, shipping, and erection constraints, shall be considered.

If data for the trends in labor and material cost fluctuation is available, the effect of such trends should be projected to the time the bridge will likely be constructed.

Cost comparisons of structural alternatives should be based on long-range considerations, including inspection, maintenance, repair, and/or replacement. Lowest first cost does not necessarily lead to lowest total cost.

ALTERNATIVE PLANS

In instances where economic studies do not indicate a clear choice, the State Bridge Engineer may require that alternative contract plans be prepared and bid competitively. Designs for alternative plans shall be of equal safety, serviceability, and aesthetic value.

Movable bridges over navigable waterways should be avoided to the extent feasible. Where movable bridges are proposed, at least one fixed bridge alternative should be included in the economic comparisons.

Bridge Aesthetics

Bridges should complement their surroundings, be graceful in form, and present an appearance of adequate strength.

Significant improvements in appearance can often be made with small changes in shape or position of structural members at negligible cost. For prominent bridges, however, additional cost to achieve improved appearance is often justified, considering that the bridge will likely be a feature of the landscape for 75 or more years.

Engineers should seek more pleasant appearance by improving the shapes and relationships of the structural component themselves. The application of extraordinary and nonstructural embellishment should be avoided.

The following guidelines should be considered:

- Alternative bridge designs without piers or with few piers should be studied during the site selection and location stage and refined during the preliminary design stage.

- Pier form should be consistent in shape and detail with the superstructure.

- Abrupt changes in the form of components and structural type should be avoided. Where the interface of different structural types cannot be avoided, a smooth transition in appearance from one type to another should be attained.

- Attention to details, such as deck drain downspouts, should not be overlooked.

- The use of the bridge as a support for message or directional signing or lighting should be avoided wherever possible.

- Transverse web stiffeners, other than those located at bearing points, should not be visible in elevation.

- For spanning deep ravines, arch-type structures should be preferred.

The most admired modern structures are those that rely for their good appearance on the forms of the structural components themselves:

- Components are shaped to respond to the structural function. They are thick where the stresses are greatest and thin where the stresses are smaller.

- The function of each part and how the function is performed is visible.

- Components are slender and widely spaced, preserving views through the structure.

- The bridge is seen as a single whole, with all members consistent and contributing to that whole; for example, all elements should come from the same family of shapes, such as shapes with rounded edges.

- The bridge fulfills its function with a minimum of material and minimum number of elements.

- The size of each member compared with the others is clearly related to the overall structural concept and the job the component does, and

- The bridge as a whole has a clear and logical relationship to its surroundings.

HYDROLOGY AND HYDRAULICS

General

Hydrologic and hydraulic studies and assessments of bridge sites for stream crossings shall be completed as part of the preliminary plan development. The detail of these studies should be commensurate with the importance of and risks associated with the structure.

Temporary structures for the Contractor's use or for accommodating traffic during construction shall be designed with regard to the safety of the traveling public and the adjacent property owners, as well as minimization of impact on floodplain natural resources. ADOT may permit revised design requirements consistent with the intended service period for, and flood hazard posed by, the temporary structure. Contract documents for temporary structures shall delineate the respective responsibilities and risks to be assumed by ADOT and the Contractor.

Evaluation of bridge design alternatives shall consider stream stability, backwater, flow distribution, stream velocities, scour potential, flood hazards, and consistency with established criteria for the National Flood Insurance Program.

Site Data

A site-specific data collection plan shall include consideration of:

- Collection of aerial and/or ground survey data for appropriate distances upstream and downstream from the bridge for the main stream channel and its floodplain;

- Estimation of roughness elements for the stream and the floodplain within the reach of the stream under study;

- Sampling of streambed material to a depth sufficient to ascertain material characteristics for scour analysis;
- Subsurface borings;
- Factors affecting water stages, including high water from streams, reservoirs, detention basins, and flood control structures and operating procedures;
- Existing studies and reports, including those conducted in accordance with the provisions of the National Flood Insurance Program or other flood control programs;
- Available historical information on the behavior of the stream and the performance of the structure during past floods, including observed scour, bank erosion, and structural damage due to debris or ice flows; and
- Possible geomorphic changes in channel flow.

Hydrologic Analysis

The following flood flows should be investigated, as appropriate, in the hydrologic studies:

- For assessing flood hazards and meeting floodplain management requirements – the 100-year flood;
- For assessing risks to highway users and damage to the bridge and its roadway approaches – the overtopping flood and/or the design flood for bridge scour;
- For assessing catastrophic flood damage at high risk sites – a check flood of a magnitude selected by the Bridge Designer as appropriate for the site conditions and the perceived risk;
- For investigating the adequacy of bridge foundations to resist scour – the check flood for bridge scour;
- To satisfy ADOT design policies and criteria – design floods for waterway opening and bridge scour for the various functional classes of highways, as described in the ADOT Roadway Design Guidelines;
- To calibrate water surface profiles and to evaluate the performance of existing structures – historical floods, and
- To evaluate environmental conditions – low or base flow information

Hydraulic Analysis

GENERAL

The Bridge Designer shall utilize analytical models and techniques that have been approved by ADOT and that are consistent with the required level of analysis as described in the ADOT Roadway Design Guidelines.

STREAM STABILITY

Studies shall be carried out to evaluate the stability of the waterway and to assess the impact of construction on the waterway. The following items shall be considered:

- Whether the steam reach is degrading, aggrading, or in equilibrium;
- For stream crossing near confluences, the effect of the main stream and the tributary on the flood stages, velocities, flow distribution, vertical and lateral movements of the stream, and the effect of the foregoing conditions on the hydraulic design of the bridge;
- Location of favorable stream crossing, taking into account whether the stream is straight, meandering, braided, or transitional, or control devices to protect the bridge from existing or anticipated future stream conditions;
- The effect of any proposed channel changes;
- The effect of aggregate mining or other operations in the channel;
- Potential changes in the rates or volumes of runoff due to land use changes;
- The effect of natural geomorphic stream pattern changes on the proposed structure; and
- The effect of geomorphic changes on existing structures in the vicinity of, and caused by, the proposed structure.

For unstable streams or flow conditions, special studies shall be carried out to assess the probable future changes to the plan form and profile of the stream and to determine countermeasures to be incorporated in the design, or at a future time, for the safety of the bridge and approach roadways.

BRIDGE WATERWAY

The design process for sizing the bridge waterway shall include:

- The evaluation of flood flow patterns in the main channel and floodplain for existing conditions, and
- The evaluation of trial combinations of highway profiles, alignments, and bridge lengths for consistency with design objectives.

Where use is made of existing flood studies, their accuracy shall be determined.

BRIDGE FOUNDATIONS

General

The structural, hydraulic, and geotechnical aspects of foundation design shall be coordinated and differences resolved prior to approval of preliminary plans.

To reduce the vulnerability of the bridge to damage from scour and hydraulic loads, consideration should be given to the following general design concepts:

- Set deck elevations as high as practical for the given site conditions to minimize inundation, or overtopping of roadway approach sections, and streamline the superstructure to minimize the area subject to hydraulic loads and the collection of ice, debris, and drifts.
- Utilize relief bridges, guide banks, dikes, and other river training devices to reduce the turbulence and hydraulic forces acting at the bridge abutments.
- Utilize continuous span designs. Anchor superstructures to their substructures where subject to the effects of hydraulic loads, buoyancy, ice, or debris impacts or accumulations. Provide for venting and draining of the superstructure.
- Where practical, limit the number of piers in the channel, streamline pier shapes, and align pier columns with the direction of flood flows. Avoid pier types that collect ice and debris. Locate piers beyond the immediate vicinity of stream banks.
- Locate abutments back from the channel banks where significant problems with ice/debris buildup, scour, or channel stability are anticipated, or where special environmental or regulatory needs must be met, e.g., spanning wetlands.
- Design piers within floodplains as river piers. Locate their foundations at the appropriate depth if there is a likelihood that the stream channel will shift during the life of the structure or that channel cutoffs are likely to occur.

- Where practical, use debris racks to stop debris before it reaches the bridge. Where significant debris buildup is unavoidable, its effects should be accounted for in determining scour depths and hydraulic loads.

- A majority of bridge failures in the United States and elsewhere are the result of scour. The added cost of making a bridge less vulnerable to damage from scour is small in comparison to the total cost of a bridge failure.

Bridge Scour

As required by Section 3, scour at bridge foundations is investigated for two conditions:

- For the design flood for scour, the streambed material in the scour prism above the scour line shall be assumed to have been removed for design conditions. The design flood storm surge, tide, or mixed population flood shall be the more severe of the 100-year events or from an overtopping flood of lesser recurrence interval.

- For the check flood for scour, the stability of the bridge foundation shall be investigated for scour conditions resulting from a designated flood storm surge, tide, or mixed population flood not to exceed the 500-year event or from an overtopping flood of lesser recurrence interval. Excess reserve beyond that required for stability under this condition is not necessary. The extreme event limit state shall apply.

If the site conditions, due to debris jams, and low tailwater conditions near stream confluences dictate the use of a more severe flood event for either the design or check flood for scour, the Bridge Designer may use such flood event.

Spread footings on soil or erodible rock shall be located beyond the scour potential of the waterway. Spread footings on scour-resistant rock shall be designed and constructed to maintain the integrity of the supporting rock.

Deep foundations with footings shall be designed to place the top of the footing below the estimated contraction scour depth where practical to minimize obstruction to flood flows and resulting local scour. Even lower elevations should be considered for pile-supported footings where the piles could be damaged by erosion and corrosion from exposure to stream currents. Where conditions dictate a need to construct the top of a footing to an elevation above the streambed, attention shall be given to the scour potential of the design.

When fendering or other pier protection systems are used, their effect on pier scour and collection of debris shall be taken into consideration in the design.

The design flood for scour shall be determined on the basis of the Bridge Designer's judgment of the hydrologic and hydraulic flow conditions at the site. The recommended procedure is to evaluate scour due to the specified flood flows and to design the foundation for the event expected to cause the deepest total scour.

The recommended procedure for determining the total scour depth at bridge foundations is as follows:

- Estimate the long-term channel profile aggradation or degradation over the service life of the bridge;
- Estimate the effects of gravel mining on the channel profile, if appropriate;
- Estimate the long-term channel plan form changes over the service life of the bridge;
- As a design check, adjust the existing channel and floodplain cross-sections upstream and downstream of bridge as necessary to reflect anticipated changes in the channel profile and plan form;
- Determine the combination of existing or likely future conditions and flood events that might be expected to result in the deepest scour for design conditions.;
- Determine water surface profiles for a stream reach that extends both upstream and downstream of the bridge site for the various combinations of conditions and events under consideration;
- Determine the magnitude of contraction scour and local scour at piers and abutments; and
- Evaluate the results of the scour analysis, taking into account the variables in the methods used, the available information on the behavior of the watercourse, and the performance of existing structures during past floods. Also consider present and anticipate future flow patterns and the effect of the flow on the bridge. Modify the bridge design where necessary to satisfy concerns raised by the scour analysis and the evaluation of the channel plan form.

Foundation designs should be based on the total scour depths estimated by the above procedure, taking into account appropriate geotechnical safety factors. Where necessary, bridge modifications may include:

- Relocation or redesign of piers or abutments to avoid areas of deep scour or overlapping scour holes from adjacent foundation elements,
- Addition of guide banks, dikes, or other river training works to provide for smoother flow transitions or to control lateral movement of the channel,
- Enlargement of the waterway area, or
- Relocation of the crossing to avoid an undesirable location.

Foundations should be designed to withstand the conditions of scour for the design flood and the check flood. In general, this will result in deep foundations. The design of the foundations of existing bridges that are being rehabilitated should consider underpinning if scour indicates the need. Riprap and other scour countermeasures may be appropriate if underpinning is not cost effective.

The stability of abutments in areas of turbulent flow shall be thoroughly investigated. Exposed embankment slopes should be protected with appropriate scour countermeasures.

ROADWAY APPROACHES TO BRIDGE

The design of the bridge shall be coordinated with the design of the roadway approaches to the bridge on the floodplain so that the entire flood flow pattern is developed and analyzed as a single, interrelated entity. Where roadway approaches on the floodplain obstruct overbank flow, the highway segment within the floodplain limits shall be designed to minimize flood hazards.

Where diversion of flow to another watershed occurs as a result of backwater and obstruction of flood flows, an evaluation of the design shall be carried out to ensure compliance with legal requirements in regard to flood hazards in the watershed.

Deck Drainage

GENERAL

The bridge deck and its highway approaches shall be designed to provide safe and efficient conveyance of surface runoff from the traveled way in a manner that minimizes damage to the bridge and maximizes the safety of passing vehicles. Transverse drainage of the deck, including roadway, bicycle paths, and pedestrian walkways, shall be achieved by providing a cross slope or superelevation sufficient for positive drainage. For wide bridges with more than three lanes in each direction, special design of bridge deck drainage and/or special rough road surfaces may be needed to reduce the potential for hydroplaning. Water flowing downgrade in the roadway gutter section shall be intercepted and not permitted to run into the bridge. Drains at bridge ends shall have sufficient capacity to carry all contributing runoff.

In those unique environmentally sensitive instances where it is not possible to discharge into the underlying water course, consideration should be given to conveying the water in a longitudinal storm drain affixed to the underside of the bridge and discharging it into appropriate facilities on natural ground at bridge end.

Where feasible, bridge decks should be watertight and all of the deck drainage should be carried to the ends of the bridge.

A longitudinal gradient on bridges should be maintained. Zero gradients and sag vertical curves should be avoided. Design of the bridge deck and the approach roadway drainage systems should be coordinated.

The "Storm Drainage" chapter of the AASHTO Model Drainage Manual contains guidance on recommended values for cross slopes.

DESIGN STORM

The design storm for bridge deck drainage shall not be less than the storm used for design of the pavement drainage system of the adjacent roadway, unless otherwise specified.

TYPE, SIZE AND NUMBER OF DRAINS

The number of deck drains should be kept to a minimum consistent with hydraulic requirements.

In the absence of other applicable guidance, for bridges where the highway design speed is less than 45 MPH, the size and number of deck drains should be such that the spread of deck drainage does not encroach on more than one-half the width of any designated traffic lane. For bridges where the highway design speed is not less than 45 MPH, the spread of deck drainage should not encroach on any portion of the designated traffic lanes. For bridges with adjacent pedestrian sidewalk, the spread of deck drainage should not encroach on any portion of the adjacent designated traffic lanes. Gutter flow should be intercepted at cross slope transitions to prevent flow across the bridge deck.

DISCHARGE FROM DECK DRAINS

Deck drains shall be designed and located such that surface water from the bridge deck or road surface is directed away for the bridge superstructure elements and the substructure.

Consideration should be given to:

- A minimum 4.0-IN projection below the lowest adjacent superstructure component,
- Location of pipe outlets such that a 45-degree cone of splash will not touch structural components.
- Use of free drops or slots in parapets wherever practical and permissible,
- Use of bends not greater than 45 degrees, and
- Use of cleanouts.

Runoff from bridge decks and deck drains shall be disposed of in a manner consistent with environmental and safety requirements.

Consideration should be given to the effect of drainage systems on bridge aesthetics.

For bridges where free drops are not feasible, attention should be given to the design of the outlet piping system to:

- Minimize clogging and other maintenance problems, and
- Minimize the intrusive effect of the piping on the bridge symmetry and appearance.

Free drops should be avoided where runoff creates problems with traffic, rail, or shipping lanes. Riprap or pavement should be provided under the free drops to prevent erosion.

DRAINAGE OF STRUCTURES

Cavities in structures where there is a likelihood for entrapment of water shall be drained at their lowest point. Decks and wearing surfaces shall be designed to prevent the ponding of water, especially at deck joints. For bridge decks with nonintegral wearing surfaces or stay-in-place forms, consideration shall be given to the evacuation of water that may accumulate at the interface.

Arizona Department of Transportation
Bridge Group

BRIDGE PRACTICE GUIDELINES

SECTION 3- LOADS AND LOAD FACTORS

Chapter	Page	Issue Date
SCOPE	3	8/6/02
TYPES OF LOADS	3	8/6/02
Dead Loads	3	8/6/02
Shortening	3	8/6/02
Box Girder Deck Forms	3	8/6/02
Differential Settlement	4	8/6/02
Future Wearing Surface	4	8/6/02
Wearing Surface	4	8/6/02
Live Load & Impact	4	8/6/02
Longitudinal Forces	5	8/6/02
Centrifugal Forces	5	8/6/02
Wind Loads	5	8/6/02
Thermal Forces	5	8/6/02
Stream Forces	5	8/6/02
Figure 1 – Groundline Variations Due to Scour	8	8/6/02
Lateral Earth Pressure	8	8/6/02
Earthquake	8	8/6/02
Figure 2 – Map of Horizontal Acceleration at Bedrock for Arizona	10	8/6/02
DISTRIBUTION OF LOADS	11	8/6/02
Longitudinal Beams (Girders)	11	8/6/02
Concrete Box Girders	12	8/6/02
Transverse Beam (Floorbeams)	12	8/6/02
Multi-beam Decks	12	8/6/02
Concrete Slabs – Reinforced Perpendicular to Traffic (Slab on Stringer)	12	8/6/02
Concrete Slabs – Reinforced Parallel to Traffic (Slab Span)	12	8/6/02

Concrete Slabs – Reinforced Both Ways 12 8/6/02
Timber Flooring, Composite Wood – Concrete Members and Glued Laminated Timber Decks 12 8/6/02
Steel Grid Floors 13 8/6/02
Spread Box Girders 13 8/6/02
Live Load Distribution 13 8/6/02

LOAD COMBINATIONS 14 8/6/02

SCOPE

This section contains guidelines to supplement provisions of Section 3 of the AASHTO Specifications which specifies minimum requirements for loads and forces, the limits of their application, load factors, and load combinations used for the design of new bridges. The load provisions may also be applied to the structural evaluation and modification of existing bridges.

In accordance with the applicable provisions of the AASHTO Specifications, the Service Load Design method (Allowable Stress Design) shall be used for the design of all members except columns, sound barrier walls and bridge railings. Columns and sound barrier walls shall be designed by the Strength Design method (Load Factor Design). Bridge railing design for new bridges shall be based on the AASHTO LRFD Bridge Design Specifications.

For load applications and distributions for specific bridge types, refer to the following sections.

TYPES OF LOADS

Loads shall be as specified in **Section 3** of **AASHTO** except as clarified or modified in these guidelines. **AASHTO** loading specifications shall be the minimum design criteria used for all bridges.

Dead Loads (AASHTO 3.3)

The dead load shall consist of the weight of entire structure, including the roadways, curbs, sidewalks, railing. In addition to the structure dead loads, superimposed dead loads such as pipes, conduits, cables, stay-in-place forms and any other immovable appurtenances should be included in the design.

SHORTENING

Dead load should include the elastic effects of prestressing (pre or post-tensioned) after losses. The long-term effects of shrinkage and creep on indeterminate reinforced concrete structures may be ignored, on the assumption that forces produced by these processes will be relieved by the same processes.

BOX GIRDER DECK FORMS

Where deck forms are not required to be removed, an allowance of 5-10 lb/ft^2 for form dead load shall be included.

DIFFERENTIAL SETTLEMENT (AASHTO 3.3.2.1)

Differential settlement shall be considered in the design when indicated in the Geotechnical Report. The Geotechnical Report should provide the magnitude of differential settlement to be use in the design. Differential settlement shall be considered the same as temperature and shrinkage forces and included in **Group IV**, **V** and **VI** load combinations.

FUTURE WEARING SURFACE (AASHTO 3.3.3)

All new structures shall be designed to carry an additional dead load of 25 pounds per square foot from curb to curb of roadway to allow for a future wearing surface. This load is in addition to any wearing surface, which may be applied at the time of construction. The weight of the future wearing surface shall be excluded from the dead load for deflection calculations.

WEARING SURFACE (AASHTO 3.3.5)

The top ½" of the deck shall be considered as a wearing surface. The weight of the ½" wearing surface shall be included in the dead load but the ½" shall not be included in the depth of the structural section for all strength calculations including the deck, superstructure and the pier cap, where appropriate.

Live Load & Impact (AASHTO 3.4 - 3.8, 3.11, 3.12)

The design live load shall consist of the appropriate truck or lane loading in accordance with **AASHTO 3.7.3**. As a minimum, all bridges in Arizona will be designed for HS20-44 loading. In addition, bridges supporting Interstate highways, or other highways which carry heavy truck traffic, will be designed for Alternative Military Loading (**AASHTO 3.7.4**).

The lane loading or standard truck shall be assumed to occupy a width of 10 feet. These loads shall be placed in 12-foot wide design traffic lanes, spaced across the entire bridge roadway width measuring between curbs. Fractional parts of design lanes shall not be used, but roadway width from 20 to 24 feet shall have two design lanes each equal to one-half the roadway width. The traffic lanes shall be replaced in such numbers and positions on the roadway, and the loads shall be placed in such positions within their individual traffic lanes, so as to produce the maximum stress in the member under consideration. Where maximum stresses are produced in any member by loading with three or more traffic lanes simultaneously, the live load may be reduced by a probability factor as covered in **AASHTO 3.12**. This would apply to members such as transverse floor beams, truss, and two-girder bridges, pier caps, pier columns or any member that has been loaded more than two traffic lanes. This does not apply to deck slab or longitudinal beams designed for fractional wheel loads since less than three traffic lanes will produce the maximum stress. Generally, a reduction factor will be applied in the substructure design for multiple loadings.

An impact factor shall be applied to the live load in accordance with **AASHTO 3.8**. The live load stresses for the superstructure members resulting from the truck or lane loading on the

superstructure, shall be increased by an allowance for dynamic, vibratory and impact effect. Impact should be included as part of the loads transferred from the superstructure to the substructure, but shall not be included in loads transferred to the footing nor to those parts of piles or columns that are below ground (**AASHTO 3.8.1-3.8.2**).

Longitudinal Forces (AASHTO 3.9)

Provision shall be made for the effect of a longitudinal force of 5 percent of the live load in all lanes carrying traffic headed in the same direction without impact.

Centrifugal Forces (AASHTO 3.10)

Centrifugal forces are included in all groups which contain vehicular live load. They act 6 feet above the roadway surface and are significant when curve radii are small or columns are long. They are radial forces induced by moving trucks. See **AASHTO 3.10.1, Equation (3-2)** for force equation.

Wind Loads (AASHTO 3.15)

Wind loads shall be applied according to Section 3.15 of the Standard Specifications.

Thermal Forces (AASHTO 3.16)

Thermal movement and forces shall be based on the following mean temperatures and temperature ranges.

		Concrete		**Steel**	
Elevation (ft)	**Mean (^oF)**	**Rise (^oF)**	**Fall (^oF)**	**Rise (^oF)**	**Fall (^oF)**
Up to 3000	70	30	40	60	60
3000 - 6000	60	30	40	60	60
Over 6000	50	35	45	70	80

The effects of differential temperature between the top slab and bottom slab of concrete box girder bridges is normally not considered. However, when approval is obtained for structures which warrant such consideration, the following temperature ranges should be used.

DL + Diff Temp	Delta = 18 degrees
DL + LL + I + Diff Temp	Delta = 9 degrees

Stream Forces (AASHTO 3.18.1)

A Bridge Hydraulics Report as outlined in Section 2 shall be produced by Roadway Drainage Section or a consultant, when appropriate, for all stream crossings. The designer should review the Bridge Hydraulics Report for a full understanding of

waterway considerations. The report should contain as a minimum the following information for both the critical flow and superflood conditions.

- High water elevation
- Mean Velocity
- Scour Elevations (General and Local)
- Angle of attack
- Required bank protection
- Special drainage considerations

For design for the most critical flow and the superflood condition, the following criteria shall be used unless more severe criteria are recommended in the Bridge Hydraulics Report.

- Design calculations of stream forces on piers over natural water courses shall assume a 2 foot increase in pier width per side due to blockage by debris with a shape factor k = 1.40 for the first 12 feet of depth of flow. For flows with depths greater than 12 feet, only the top 12 feet shall be assumed blocked by debris with lower sections using the actual pier width and a shape factor in accordance with AASHTO. For uncased drilled shafts, a 20% increase in diameter should be assumed to account for possible oversizing of the hole and any irregular shape. The force distribution on the pier shall be assumed to vary linearly from the value at the water surface to zero at the bottom of the scour hole as described in AASHTO.

- When the clear distance between columns or shafts is 16 feet or greater, each column or shaft shall be treated as an independent unit for stream forces and debris. When the clear distance is less than 16 feet the greater of the two following criteria shall be used:
  1) Each column or shaft acting as an independent unit or 2) All columns or shafts acting as one totally clogged unit.

- The mean main channel velocity for the appropriate flow condition shall be used in calculating the stream forces. The water surface elevation shall be the high water elevation for the appropriate flow condition. A minimum angle of attack of 15 degrees shall be assumed.

- Scour may be categorized into two types: general and local. General scour is the permanent loss of soil due to degradation or mining while local scour is the temporary loss of soil during a peak flow. Local scour may consist of two types: contraction scour and local pier or abutment scour. Contraction scour occurs uniformly across the bridge opening when the waterway opening of the bridge causes a constriction in the stream width. Local pier and abutment scour occurs locally at substructure units due to the turbulence caused by the presence of the substructure unit.

- Bridge foundation units outside the highwater prism need not be designed for scour or stream forces. Spread footing bearing elevations shall be minimum 5 ft. below the channel thalweg

elevation. Tip of drilled shaft elevations shall be minimum 20 ft. below the channel thalweg elevation unless in rock sockets.

- Bridges over natural watercourses shall be investigated for four different streambed ground lines. Refer to Figure 1 for an illustration of these cases.

  1. Case 1 is the as-constructed stream cross section. For this case, the bridge shall be designed to withstand the forces from the **AASHTO Groups I** to **VII** load combinations.

  2. Case 2 represents the long-term dry streambed cross section (i.e. the as-constructed stream cross section minus the depth of the general scour). For this case, the bridge shall be designed to withstand the same forces as for case 1. Bridges need only be designed for Seismic Forces for the case of general scour. The requirements contained in **AASHTO 4.4.5.2** need not be met.

  3. Case 3 represents the streambed cross section condition for the most critical design flow. Abutment protection is designed to withstand this event and abutments may be assumed to be protected from scour for this condition. Piers will experience the full general and critical flow local scour. For this case, the bridge shall be designed to withstand the forces from the **AASHTO Groups I** to **VI** load combinations.

  4. Case 4 represents the streambed cross section conditions for the superflood condition. For this case, all bank protection and approach embankments are assumed to have failed.

  Abutments and piers should be designed for the superflood scour assuming all substructure units have experienced the maximum scour simultaneously. For this case, the bridge shall be designed to withstand the following forces: **DL + SF + 0.5W**. For members designed using the **WSD** Method an allowable overstress of 140% shall be used. For members designed using the **LFD** Method a gamma factor of 1.25 shall be used.

FIGURE 1
GROUNDLINE VARIATIONS DUE TO SCOUR

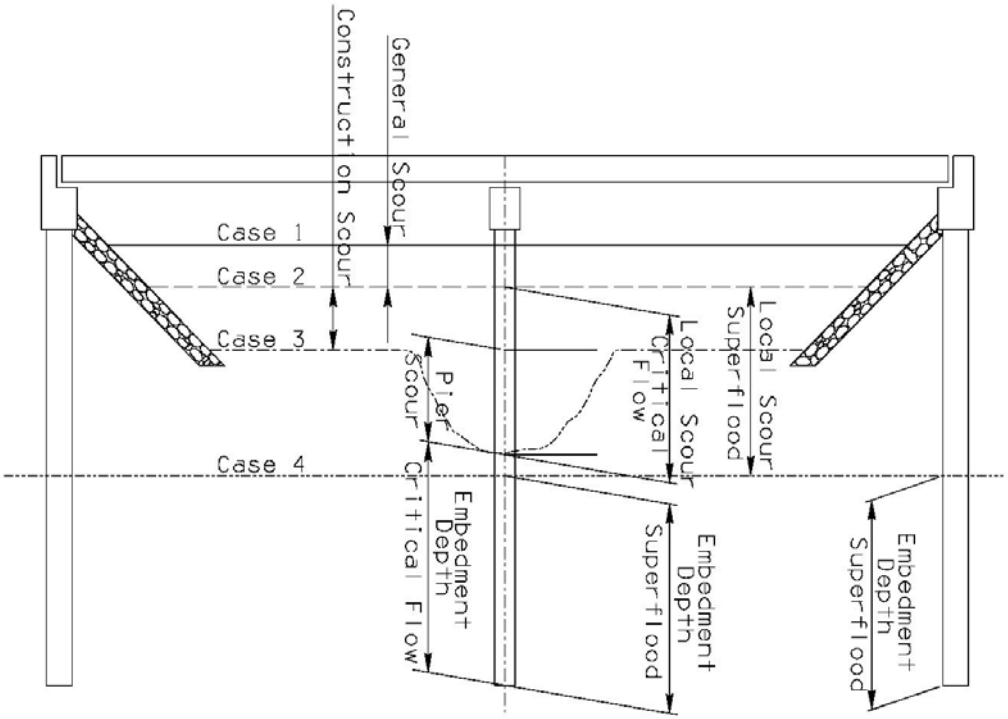

Lateral Earth Pressure (AASHTO 3.20.1)

For backfills compacted in conformance with the **AASHTO Standard Specifications**, active pressure for unrestrained walls should be calculated using an internal angle of friction of 34 degrees unless recommended otherwise in the Geotechnical Report.

Earthquakes (AASHTO 3.21)

The Standard Specifications for Highway Bridges shall be used for the seismic design of all new structures. However, the **Seismic Acceleration Map**, Figure 1-5, contained in **AASHTO Division I-A Seismic Design** shall not be used to determine the Acceleration Coefficient A. A seismic map for Arizona developed through the Arizona Transportation Research Center is contained in **Report Number FHWA-AZ 92-344**. This map provides horizontal accelerations in rock with 90% probability of not being exceeded in 50 years considering the effects of local faults. This map shall be used for all designs. A reduced

copy of this map is included in Fig. 2 for information purposes. A full size map may be obtained by contacting Bridge Technical Section at (602) 712-7910 and should be used in actual designs.

All new or widened bridge designs shall consider some form of vertical restraints. Vertical restraints shall be provided for all expansion seat abutments except for multi-span continuous box girder bridges with integral piers. Vertical restraints shall be provided between all substructure and superstructure units for steel and precast prestressed girder bridges. When required, the vertical restraints shall be designed for a minimum force equal to 10 percent of the contributing dead load unless the Standard Specifications, Division I-A Seismic Design require a higher value.

For Seismic Performance Category A Bridges, horizontal restrainers for hinges shall be designed for a force equal to 0.25 x DL of the smaller of the two frames with the column shears due to EQ deducted. For Seismic Performance Category B, C and D bridges, horizontal restrainers for hinges shall be designed in accordance with the Standard Specifications, Division I-A Seismic Design.

FIGURE 2
MAP OF HORIZONTAL ACCELERATION AT BEDROCK FOR ARIZONA

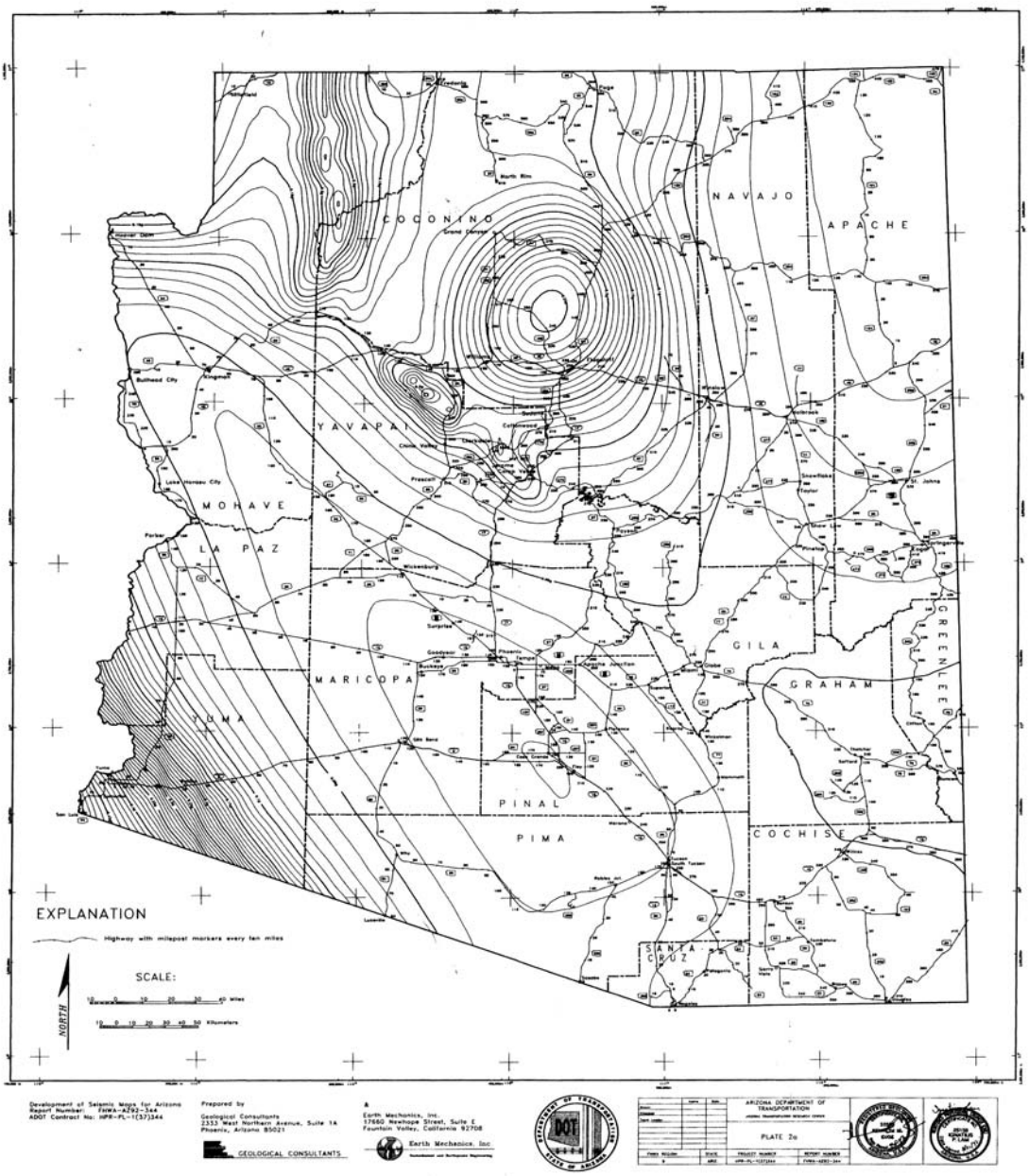

MAP OF HORIZONTAL ACCELERATION AT BEDROCK FOR ARIZONA
with 90 Percent Probability of Non-Exceedance in 50 Years
By
Ignatius Po Lam, Bruce A. Schell and Kenneth M. Euge, 1992

DISTRIBUTION OF LOADS

Loads shall be distributed as specified in **Section 3** of **AASHTO** except as clarified or modified in these guidelines.

Truck wheel loads are delivered to a flexible support through compressible tires, which make it very difficult to define the area of the bridge deck significantly influenced. Computerized grid systems and finite element programs can come close to reality, but they are complicated to apply and are limited by mesh or element size and by the accuracy with which the mechanical properties of the composite materials can be modeled. These two- or three dimensional problems are reduced to one dimension through various empirical distribution factors given in the **AASHTO Standard Specifications**.

These distribution factors have been derived from research involving physical testing and/or computerized parameter studies. In order to simplify the design procedure, the number of variables was reduced to a minimum consistent with safety and reasonable economy, according to the judgment of the AASHTO Subcommittee on Bridges and Structures. The factor S/5.5, so developed, has been used for many years to determine the portion of a wheel load to be supported by steel or prestressed concrete girders under a concrete slab. Other variables, such as span aspect ratio, skew angle and relative stiffness between stringer and slab, are not considered except for occasional special bridges. The conservatism of this approach may account for some of the reserve strength regularly observed when redundant girder bridges are load tested. Similarly, concrete slab spans and slabs on girders will invariably support much more load than predicted by empirical analysis.

Treatment of wheel load distribution to the various bridge components in the **AASHTO Standard Specifications** is as follows:

Longitudinal Beams (Girders)

Distribution factors given in the **AASHTO 3.23.1, 3.23.2 and Table 3.23.1** are used almost exclusively. Occasionally, special conditions will justify the use of a discrete element grid and plate solution.

For simplicity of calculation and because there is no significant difference, the distribution factor for moment is used also for shear.

Composite dead loads (such as curbs, barriers and wearing surfaces) are distributed equally to all stringers except for extraordinary conditions of deck width or ratio of overhang to beam spacing. Live load is distributed to all types of outside beams assuming the deck to act as a simple cantilever span supported by the outside and the first inside stringer.

Concrete Box Girders AASHTO 3.23.2.3.2.2)

In calculating the number of lanes of live load on the superstructure, the entire cross section of the superstructure shall be considered as one unit with the number of lanes of live load equal to the out-to-out width of the deck divided by 14. Do not reduce this number for multiple lanes as specified in **AASHTO 3.12.1** nor round to a whole number as specified in **AASHTO 3.6.3**.

Transverse Beam (Floorbeams, AASHTO 3.23.3)

For the few cases where floorbeams have been used without stringers on highway bridges, it has appeared proper to calculate reaction assuming the deck slab to act as a continuous beam supported by the floorbeams. No transverse distribution of wheel loads is allowed unless a sophisticated analysis is used.

Multi-beam Decks(AASHTO 3.23.4.1)

Refer to Bridge Practice Guidelines, Section 5, Page 23.

Concrete Slabs – Reinforced Perpendicular to Traffic (Slab on Stringer)

For this component, distribution of wheel load is built into a formula for moment. ADOT designs are standardized according to the requirements of the current **AASHTO 3.24.3.1**. Span length of slabs on prestressed concrete stringers may be taken as the clear distance between flanges.

Concrete Slabs – Reinforced Parallel to Traffic (Slab Spans)

Loads are distributed according to **AASHTO 3.24.3.2**. The approximate formula for moment is not used.

For skews up to 30 degrees, main reinforcing is parallel to traffic and no additional edge beam strength is needed for usual railing conditions. For 30 degree skew and greater, reinforcing is perpendicular to the bents and edge beam strength is provided and reinforced parallel to traffic.

Concrete Slabs – Reinforced Both Ways (AASHTO 3.24.6)

Divide the load between transverse and longitudinal spans according to the formulae for slabs supported on four sides. Use the appropriate load distribution in each direction.

Timber Flooring, Composite Wood – Concrete Members and Glued Laminated Timber Decks (AASHTO 3.25 & 3.26)

Timber is not normally used in bridge construction in Arizona.

Steel Gird Floors (AASHTO 3.26)

Follow the Specifications Closely. This type of construction is seldom used in Arizona.

Spread Box Girders (AASHTO 3.28)

Follow the Specifications Closely. This type of construction is seldom used in Arizona.

Live Load Distribution (AASHTO 3.6.3. and 3.12.1)

In designing the superstructure, the live load distribution factors shall not be reduced for multiple lanes as specified in **AASHTO 3.12.1** or rounded to a whole number as specified in **AASHTO 3.6.3**. These two reductions apply to substructure design only.

Horizontal loads on the superstructure distribute to the substructure according to a complicated interaction of bearing and bent stiffness. For continuous steel units, the following method will usually be sufficiently accurate:

- Apply transverse loads times the average adjacent span length.
- Apply longitudinal loads times the unit length to the fixed bent according to their relative stiffness.
- Calculate deformations due to temperature changes given in this guideline and convert to forces according to the stiffness of the fixed bent.
- Centrifugal force is based on the truck load reaction to each bent.

Friction in expansion bearings can usually be ignored but, if its consideration is desirable, the maximum longitudinal force may be taken as 0.10 times the dead load reaction for rocker shoes and PTFE sliding bearings.

For prestressed concrete beam spans and units on elastomeric bearings, fixity is superficial and all bearings are approximately the same stiffness. It will usually be sufficiently accurate to distribute horizontal loads in the following manner:

- Apply transverse and longitudinal loads times the average adjacent span length. The concentrated live load for longitudinal force would be located at each bent.
- Forces due to temperature deformations may be ignored.
- Centrifugal force is based on the truck load reaction to each bent.

If temperature consideration is desirable, deformations may be based on the temperature changes given in this guideline.

LOAD COMBINATIONS

Group numbers represent various combinations of loads and forces which may act on a structure. Group loading combinations for both Load Factor and Service Load Design are defined by **AASHTO 3.22.1** and **Table 3.22.1A**. The loads and forces in each group shall taken as appropriate from **AASHTO 3.3** to **3.21**.

Structures may be analyzed for an overload that is selected by the owner. Size and configuration of the overload, loading combinations, and load distribution will be consistent with procedures defined in the permit policy. The load shall be applied in Group IB as defined in **AASHTO Table 3.22.1A**. For all loadings less than H 20, **Group IA** loading combination shall be used (**AASHTO 3.22.5**).

Arizona Department of Transportation
Bridge Group

BRIDGE PRACTICE GUIDELINES

SECTION 4- STRUCTURAL ANALYSIS & DESIGN METHODS

Chapter	Page	Issue Date
SCOPE	2	8/9/02
DEFINITIONS	2	8/9/02
DESIGN METHODS	4	8/9/02
DESIGN PHILOSOPHY	5	8/9/02
STRUCTURAL ANALYSIS	7	8/9/02
ACCEPTABLE METHODS OF STRUCTURAL ANALYSIS	8	8/9/02
MATHEMATICAL MODELING	8	8/9/02
Structural Material Behavior	8	8/9/02
Elastic Behavior	8	8/9/02
Inelastic Behavior	9	8/9/02
Geometry	9	8/9/02
Small Deflection Theory	9	8/9/02
Large Deflection Theory	9	8/9/02
STATIC ANALYSIS	10	8/9/02
Plan Aspect Ratio	10	8/9/02
Structures Curved in Plan	10	8/9/02
Approximate Methods of Analysis	10	8/9/02
Refined Methods of Analysis	11	8/9/02
DYNAMIC ANALYSIS	11	8/9/02

SCOPE

This section describes methods of analysis suitable for the design and evaluation of bridges and is limited to the modeling of structures and the determination of force effects. Other methods of analysis that are based on documented material characteristics and that satisfy equilibrium and compatibility may also be used.

DEFINITIONS

Aspect Ratio – Ratio of the length to the width of a rectangle.

Compatibility – The geometrical equality of movement at the interface of jointed components.

Component – A structural unit requiring separate design consideration; synonymous with member.

Deformation – A change in structural geometry due to force effects, including axial displacement, shear displacement, and rotations.

Design – Proportioning and detailing the components and connections of a bridge to satisfy the requirements of these Specifications.

Elastic – A structural material behavior in which the ratio of stress to strain is constant, the material returns to its original unloaded state upon load removal.

Element – A part of a component or member consisting of one material.

Equilibrium – A state where the sum of forces and moments about any point in space is zero.

Equivalent Beam – A single straight or curved beam resisting both flexure and torsional effects.

Equivalent Strip – An artificial linear element, isolated from a deck for the purpose of analysis, in which extreme force effects calculated for a line of wheel loads, transverse or longitudinal, will approximate those actually taking place in the deck

Finite Difference Method – A method of analysis in which the governing differential equation is satisfied at discrete points on the structure.

Finite Element Method – A method of analysis in which a structure is discretized into elements connected at nodes, the shape of the element displacement field is assumed, partial or complete compatibility is maintained among the element interfaces, and nodal

displacements are determined by using energy variational principles or equilibrium methods.

Finite Strip Method – A method of analysis in which the structure is discretized into parallel strips. The shape of the strip displacement field is assumed and partial compatibility is maintained among the element interfaces. Model displacement parameters are determined by using energy variational principles or equilibrium methods.

Folded Plate Method – A method of analysis in which the structure is subdivided into plate components, and both equilibrium and compatibility requirements are satisfied at the component interfaces.

Force Effect – A deformation, stress, or stress resultant, i.e., axial force, shear force, flexural, or torsional moment, caused by applied loads, imposed deformations, or volumetric changes.

Foundation – A supporting element that derives its resistance by transferring its load to the soil or rock supporting the bridge.

Grillage Analogy Method – A method of analysis in which all or part of the superstructure is discretized into orthotropic components that represent the characteristics of the structure.

Inelastic – Any structural behavior in which the ratio of stress and strain is not constant, and part of the deformation remains after load removal.

Large Deflection Theory - Any method of analysis in which the effects of deformation upon forces effects is taken into account.

Member – Same as components.

Method of analysis – A mathematical process by which structural deformations, forces, and stresses are determined.

Model – A mathematical or physical idealization of a structure or component used for analysis.

Node – A point where finite elements or grid components meet; in conjunction with finite differences, a point where the governing differential equations are satisfied.

Nonlinear Response – Structural behavior in which the deflections are not directly proportional to the loads due to stresses in the inelastic range, or deflections causing significant changes in force effects, or by a combination thereof.

Orthotropic – Perpendicular to each other, having physical properties that differ in two or more orthotropic directions.

Small Deflection Theory – A basis for methods of analysis where the effects of deformation upon force effects in the structure is neglected.

Stiffness – Force effect resulting from a unit deformation.

Strain – Elongation per unit length.

Yield Line – A plastic hinge line.

Yield Line Method – A method of analysis in which a number of possible yield line patterns are examined in order to determine load-carrying capacity.

DESIGN METHODS

Under the current ADOT/Bridge Group **Bridge Practice Guidelines**, two basic methods are used – Service Load Design and Strength Design. The Service Load Design (Allowable Stress Design) shall be used for the design of all steel members and reinforced concrete members except columns, sound barrier walls and bridge railings. Columns and sound barrier walls shall be designed by the Strength Design Method (Load Factor Design). Bridge railing design for new bridges shall be based on the AASHTO LRFD Bridge Design Specifications.

In Service Load Design, loads of the magnitude anticipated during the life of the structure are distributing empirically and each member analyzed assuming completely elastic performance. Calculated stresses are compared to specified allowable stresses which have been scaled down from the tested strength of the materials by a factor judged to provide a suitable margin of safety.

In Strength Design, the same service loads are distributed empirically and the external forces on each member are determined by elastic analysis. These member forces are increased by factors judged to provide a suitable margin of safety against overloading. These factored forces are compared to the ultimate strength of the member scaled down by a factor reflecting the possible consequences from construction deficiencies. Serviceability aspects, such as deflection, fatigue and crack control, must be determined by Service Load Analysis.

The Strength Design Method produces a more uniform factor of safety against overload between structures of different types and span lengths. Strength Design also tends to produce more flexible structures.

A third method is Load and Resistance Factor Design which was adopted by AASHTO in 1994 and will replace Service Load Design and Strength Design in October, 2007 for all

Federal-Aid projects. This method will have more consistent load and resistance factors based on the probabilistic theory and reliability indices that will generate more uniform and realistic safety factors between different types of bridges. Currently, ADOT/Bridge Group is not using this method for bridge design except for the concrete bridge barrier design.

DESIGN PHILOSOPHY

New structure types were developed to meet specific needs. Concrete slab, T-Girder and Box Beam bridges were developed in the late 1940's because many short span stream crossings were being constructed uneconomically with steel beams and trusses. These bridges are still used very economically in considerable numbers today. Precast pretensioned beams were developed in the 1950's for medium span stream crossings and grade separations because steel beams became expensive and sometimes slow on delivery. Fewer plans are assembled from standard prestressed girder drawings today because bridge geometry has become more complicated and variable so that most details must be specially prepared. The beams themselves are still the standard shapes developed in the beginning and the accessories required to complete the span are covered with standard details. Cast-In-Place Post-Tensioned Box Girder bridges were introduced the 1970's and became one of the most common types of bridges used in Arizona in addition to precast prestressed girder bridges.

Bridge design has become more sophisticated and complicated. Prestressed concrete girders continue to be the most economical and durable solution for spans up to 140 feet but aesthetics are occasionally dictating concrete box girders with wide overhangs for this span range. This requires a higher order of analysis while considering time dependent effects and erection conditions. Cable stayed bridges are competing for longer spans. This adds more complication to the design procedure and challenges the specification writers to establish realistic controls.

The Bridge Design Service has performed all types of design in-house, except for cable stayed and segmental bridges. The more advanced structure types have as yet required only a small portion of the overall effort. The most important part of the routine work is to design and to prepare drawings for multitudes of ordinary bridges which usually have some variations in geometry that prohibits the use of straight standard details.

Geometry is considered an important part of bridge design. Framing dimensions and elevations must be accurate in order to avoid expensive field correction. Design engineers are primarily responsible for geometry accuracy.

Constructability is highly desirable. There have been designs which looked good on paper but were virtually impossible to construct. Designers need to consider how to build the component being designed. Construction experience remains a valuable asset.

Details may be the most critical aspect of the design process. Failure to provide for proper stress flow at discontinuities has often caused local stress and sometimes mortal injury to a system. Engineers and technicians should recognize and carefully evaluate untested details.

The bottom line on bridge design is maintenance. It is usually much more expensive to repair a bridge than it was to build it. Unfortunately, maintenance problems tend to occur many years after the structure is built. During that time there may be many more bridges designed with the same problem. Experience is a good teacher, but the lesson is sometimes slow to be learned. It takes a good designer to anticipate maintenance problems and spend just enough of the taxpayers' money to prevent or delay them.

Design engineers are expected to learn the system quickly. Based on education and experience, they should develop engineering judgment to recognize the degree of design complication and accuracy justified by the type and size of member under consideration. A number of computer programs are available. Some are so complicated as to be useful in very special investigations only (GT-STRUDL). Others, although complicated, offer the only realistic solution to a problem (BDS). Others are very useful and time saving in design production (CONSPAN). Longhand methods may even be desirable for some items, especially in the learning stage.

Design calculations are the documentation for structural adequacy and accuracy of pay quantities for each bridge. These will be kept on file for a reasonable period after construction of the bridge. The condition of the calculations reflects the attitude of the designer and checker. The design calculations should consist of a concise, but complete, clear, and easily followed record of all essential features of the final design of each structure. It is often necessary to refer to these calculations because of changes or questions which arise during the construction period. If properly prepared and assembled, these calculations are of great value as a guide and time saver for preparing a similar design of another structure.

The following essential features are to be observed in preparing, checking and filing design calculations:

- The headings at the top of each sheet are to be completely filled in and each sheet has to be numbered.
- The first sheet of calculations should list such governing features as roadway width, curb or sidewalk widths and heights, and design loads. If any deviations are to be made from standard design specifications, they also need to be listed.
- The first sheet of calculations of any superstructure unit should show sketches, a layout of units, giving number of spans and length (c-c bearing) of each span. A line diagram will suffice.
- The first sheet of calculations of any substructure unit should show an appropriate sketch or diagram of the units, properly dimensioned, and the superstructure should be shown.

- Appropriate headings and subheadings such as “Live Load Moments, Center Girder”, “Summary of Shears, Outside Girders”, etc., should be freely used. These headings should be supplemented by explanatory notes wherever necessary to clarify the portion of structure under consideration, the load combinations being used, or the method of analysis being employed.
- In checking the calculations, do not make up a separate set of design calculations. Follow the original calculations and check them thoroughly, or at least check the final results. In case when a portion of original calculations are incomplete or inaccurate, a portion of the revised set must be prepared by the designer or checker. This revised set will replace the original set as a portion of the final calculations.
- In checking calculations, don’t carry through corrections that are so minor in amount as to have no real effect on the structure.
- Superstructure calculations should be placed in front of substructure calculations. Quantity calculations shall be placed at the end of the file. Preliminary designs, trial designs and comparative designs are not to be included in the design folder as finally filed.

Supplement the above guidelines with good judgment and plenty of common sense. The extra ten minutes you spend in making your calculation sheet clear and complete may save the checker an hour, and may two years hence, save some bridge designer a week or more of computations.

STRUCTURAL ANALYSIS

In general, bridge structures are to be analyzed elastically which are based on documented material characteristics and satisfy equilibrium and compatibility. However, exceptions may apply to some continuous beam superstructures by using inelastic analysis or redistribution of force effects.

This section identifies and promotes the application methods of structural analysis that are suitable for bridges. The selected method of analysis may vary from the approximate to the very sophisticated, depending on the size, complexity, and importance of the structure. The primary objective in the use of more sophisticated methods of analysis is to obtain a better understanding of structural behavior. Such improved understanding may often, but not always, lead to the potential for saving material.

These methods of analysis, which are suitable for the determination of deformations and force effects in bridge structures, have been successfully demonstrated, and most have been used for years. Although many methods will require a computer for practical implementation, simpler methods that are amenable to hand calculation and/or to the use of existing computer programs based on line-structure analysis have also been provided. Comparison with hand calculations should always be encouraged, and basic equilibrium checks should be standard practice. With rapidly improving computing technology, the more refined and complex methods of analysis are expected to become commonplace. It is important that the user understand the method employed and its associated limitations.

In general, the suggested methods of analysis are based on linear material models. This does not mean that cross-sectional resistance is limited to the linear range. The Load Factor Design present such inconsistency that the analysis is based on material linearity and the resistance model may be based on inelastic behavior.

ACCEPTABLE METHODS OF STRUCTURAL ANALYSIS

Any method of analysis that satisfies the requirements of equilibrium and compatibility and utilizes stress-strain relationships for the proposed materials may be used, including but not limited to:

- Classical force and displacement methods (Moment Distribution, and Slope Deflection Methods, etc.),
- Finite difference method,
- Finite element method,
- Folded plate method,
- Finite strip method,
- Grillage analogy method,
- Serious or other harmonic methods, and
- Yield line method.

Many computer programs are available for bridge analysis. Various methods of analysis, ranging from simple formulae to detailed finite element procedures, are implemented in such programs. Many computer programs have specific engineering assumptions embedded in their code, which may or may not be applicable to each specific case. The designer should clearly understand the basic assumptions of the program and the methodology that is implemented. The designer shall be responsible for the implementation of computer programs used to facilitate structural analysis and for the interpretation and use of results. The name, version and release date of software used should be indicated in the design calculations.

MATHEMATICAL MODELING

Mathematical models should include loads, geometry, and material behavior of the structure, and, where appropriate, response characteristics of the foundation. In most cases, the mathematical model of the structure should be analyzed as fully elastic, linear behavior except in some cases, the structure may be modeled with inelastic or nonlinear behavior.

Structural Material Behavior

ELASTIC BEHAVIOR

Elastic material properties and characteristics of concrete, steel, aluminum and wood shall be in accordance with the sections given by **AASHTO Specifications**. Changes in

these values due to maturity of concrete and environmental effects should be included in the model, where appropriate.

INELASTIC BEHAVIOR

Sections of components that may undergo inelastic deformation shall be shown to be ductile or made ductile by confinement or other means. Where inelastic analysis is used, a preferred design failure mechanism and its attendant hinge locations shall be determined. It should be ascertained in the analysis that shear, buckling, and bond failures in the structural components do not precede the formation of a flexural inelastic mechanism. Unintended overstrength of a component in which hinging is expected should be considered. Deterioration of geometrical integrity of the structure due to large deformations shall be taken into account. The inelastic model shall be based either upon the results of physical tests or upon a representation of load-deformation behavior that is validated by tests.

Geometry

SMALL DEFLECTION THEORY

If the deformation of the structure does not result in a significant change in force effects due to an increase in the eccentricity of compressive or tensile forces, such secondary effects may be ignored. Small deflection theory is usually adequate for the analysis of beam-type bridges. Columns, suspension bridges, and very flexible cable-stayed bridges and some arches other than tie arches and frames in which the flexural moments are increased or decreased by deflection tend to be sensitive to deflection considerations. In many cases, the degree of sensitivity can be assessed and evaluated by a single-step approximate method, such as the Moment Magnification Factor Method. Due to advances in material technology the bridge components become more flexible and the boundary between small- and large-deflection theory becomes less distinct.

LARGE DEFLECTION THEORY

If the deformation of the structure results in a significant change in force effects, the effects of deformation shall be considered in the equations of equilibrium. The effect of deformation and out-of-straightness of components shall be included in stability analyses and large deflection analyses. For slender concrete compressive components, those time- and stress-dependent material characteristics that cause significant changes in structural geometry shall be considered in the analysis.

Because large deflection analysis is inherently nonlinear, the loads are not proportional to the displacements, and superposition can not be used. Therefore, the order of load application can be important and should be applied in the order experienced by the structure, i.e., dead load stages followed by live load stages, etc. If the structure

undergoes nonlinear deformation, the loads should be applied incrementally with consideration for the changes in stiffness after each increment.

STATIC ANALYSIS

Plan Aspect Ratio

Where transverse distortion of a superstructure is small in comparison with longitudinal deformation, the former does not significantly affect load distribution, hence, an equilibrium idealization is appropriate. The relative transverse distortion is a function of the ratio between structural width and height, the latter, in turn, depending on the length. Hence, the limits of such idealization are determined in terms of the width-to-effective length ratio.

Simultaneous torsion, moment, shear, reaction forces, and attendant stresses are to be superimposed as appropriate. In all equivalent beam idealizations, the eccentricity of loads should be taken with respect to the centerline of the equivalent beam.

Structures Curved in Plan

- Segments of horizontally curved superstructures with torsionally stiff closed sections whose central angle subtended by a curved span or portion thereof is less than 12 degrees may be analyzed as if the segment were straight.
- The effects of curvature may be neglected on open cross-sections whose radius is such that the central angle subtended by each span is less than the value given in the following table taken from **AASHTO LRFD Specifications**.

Number of Beams	Angle for One Span	Angle for Two or More Spans
2	2°	3°
3 or 4	3°	4°
5 or more	4°	5°

- Horizontally curved superstructures other than torsionally stiff single girders may be analyzed as grids or continuums in which the segments of the longitudinal beams are assumed to be straight between nodes. The actual eccentricity of the segment between the nodes shall not exceed 2.5 percent of the length of the segment.
- V-load method may be used to analyze a horizontally curved continuous steel bridge.

Approximate Methods of Analysis

Current **AASHTO Specifications** has provided the approximate methods of load distribution factor for deck, beam-slab bridges, slab bridges and other types of structures. Please follow the provisions of **AASHTO Specifications** for specific type of structure to

obtain design parameters. Also, please refer to these **Bridge Practice Guidelines** for the design parameters listed in the various types of structures.

Refined Methods of Analysis

Refined methods, listed below, may be used to analyze bridges. In such analyses, consideration should be given to aspect ratio of elements, positioning and number of nodes, and other features of topology that may affect the accuracy of the analytical solution. When a refined method of analysis is used, a table of live load distribution coefficients for extreme force effects in each span shall be provided in the contract documents to aid in permit issuance and rating of bridges.

DYNAMIC ANALYSIS

For analysis of the dynamic behavior of bridges, the stiffness, mass and damping characteristics of the structural components shall be modeled.

The minimum number of degree-of-freedom included in the analysis shall be based upon the number of natural frequencies to be obtained and the reliability of the assumed mode shapes. The model shall be compatible with the accuracy of the solution method. Dynamic models shall include relevant aspects of the structure and the excitation. The relevant aspects of the structure may include the:

- Distribution of mass,
- Distribution of stiffness, and
- Damping characteristics.

The relevant aspects of excitation may include the:

- Frequency of the forcing function,
- Duration of application, and
- Direction of application.

Typically, analysis for vehicle- and wind-induced vibration is not to be considered in the bridge design. Although a vehicle crossing a bridge is not a static situation, the bridge is analyzed by statically placing the vehicle at various locations along the bridge and applying a dynamic load allowance as stated in **AASHTO Specifications**. However, in flexible bridges and long slender components of bridges that may be excited by bridge movement, dynamic force effects may exceed the allowance for impact. In most observed bridge vibration problems, the natural structural damping has been very low which no dynamic analysis is needed.

Dynamic analysis of the bridge must be considered if the bridge site is located in the area of high seismic active zone, such as Yuma and Flagstaff area. Please refer the **AASHTO Specifications** and Section 3 for seismic design.

Arizona Department of Transportation
Bridge Group

BRIDGE PRACTICE GUIDELINES

SECTION 5- CONCRETE STRUCTURES

Chapter	Page	Issue Date
SCOPE	3	7/9/01
DEFINITIONS	3	7/9/01
NOTATIONS	5	7/9/01
REINFORCED CONCRETE	5	7/9/01
General Requirements	5	7/9/01
Design Methods	5	8/19/02
Concrete	6	7/9/01
Modulus of Elasticity	6	7/9/01
Reinforcement	6	7/9/01
Minimum Reinforcement	6	7/9/01
Diaphragms	6	7/9/01
Hooks and Bends	7	7/9/01
Development Length	7	7/9/01
Table 1 - 180° Std. Hook Dimensions – Main Steel	8	7/9/01
Table 2 - 90° Std. Hook Dimensions – Main Steel	9	7/9/01
Table 3 - Standard Hooks for Stirrups and Ties	10	7/9/01
Table 4 - Basic Development Length	11	7/9/01
Table 5 - Development of Standard Hooks in Tension	12	7/9/01
PRESTRESSED CONCRETE	13	7/9/01
General Requirements	13	7/9/01
Allowable Stresses – Concrete	13	7/9/01
Shear	14	7/9/01
Post-Tensioned Box Girder Bridges	15	7/9/01
Concrete	15	7/9/01

Creep and Shrinkage	**15**	**7/9/01**
Flange and Web Thickness – Box Girder	**15**	**7/9/01**
Diaphragms	**15**	**7/9/01**
Deflections	**15**	**7/9/01**
Allowable Stresses – Prestressing Steel	**15**	**7/9/01**
Allowable Stresses - Concrete	**16**	**7/9/01**
Loss of Prestress	**16**	**7/9/01**
Flexural Strength	**16**	**7/9/01**
Shear	**16**	**7/9/01**
Anchorage Zone	**17**	**7/9/01**
Flange Reinforcement	**17**	**7/9/01**
Method of Analysis	**17**	**7/9/01**
Prestressed Precast Concrete	**18**	**7/9/01**
Concrete	**18**	**7/9/01**
Deflections	**19**	**7/9/01**
Allowable Stresses – Prestressing Steel	**19**	**7/9/01**
Allowable Stresses – Concrete	**19**	**7/9/01**
Loss of Prestress	**20**	**7/9/01**
Shear	**20**	**7/9/01**
Method of Analysis	**20**	**7/9/01**
Prestressed Precast I-Girders	**21**	**7/9/01**
Frames and Continuous Construction	**21**	**7/9/01**
Effective Flange Width	**21**	**7/9/01**
Diaphragms	**21**	**7/9/01**
Differential Shrinkage	**21**	**7/9/01**
Method of Analysis	**21**	**7/9/01**
Figure 1 – Strand Pattern at Girder End	**22**	**7/9/01**
Prestressed Precast Voided Slabs	**23**	**7/9/01**
End Blocks	**23**	**7/9/01**
Diaphragms	**23**	**7/9/01**
Lateral Ties	**23**	**7/9/01**
Shear Keys	**23**	**7/9/01**
Barriers	**23**	**7/9/01**
Distribution of Loads	**23**	**7/9/01**
Prestressed Precast Box Beams	**24**	**7/9/01**
End Block	**24**	**7/9/01**
Diaphragms	**24**	**7/9/01**
Lateral Ties	**25**	**7/9/01**
Shear Keys	**25**	**7/9/01**
Distribution of Loads	**25**	**7/9/01**

SCOPE

The provisions in this section apply to the design of bridges, drainage structures, retaining walls, and other appurtenant highway structure components constructed of normal density or lightweight concrete and reinforced with steel bars and/or prestressing strands or bars. The provisions are based on concrete strengths varying from 2500 psi to 6000 psi.

DEFINITIONS

Anchorage Zone – The portion of the structure in which the prestressing force is transferred from the anchorage device onto the local zone of the concrete, and then distributed more widely into the general zone of the structure.

Cast-in Place Concrete – Concrete placed in its final location in the structure while still in a plastic state.

Creep – Time-dependent deformation of concrete under permanent load.

Development length – The distance required to develop the specified strength of a reinforcing bar or prestressing strand.

Embedment Length – The length of reinforcement or anchor provided beyond a critical section over which transfer of force between concrete and reinforcement may occur.

General Zone – Region adjacent to a post tensioned anchorage within which the prestressing force spreads out to an essentially linear stress distribution over the cross-section of the component.

Lightweight Concrete – Concrete containing lightweight aggregate and having an air-dry unit weight not exceeding 120 pcf, as determined by ASTM C 567.

Local Zone – The volume of concrete that surrounds and is immediately ahead of the anchorage device and that is subjected to high compressive stresses.

Low Relaxation Steel – Prestressing strand in which the steel relaxation losses have been substantially reduced by stretching at an elevated temperature.

Normal-Weight Concrete – Concrete having a weight between 135 and 155 pcf.

Post tensioning – A method of prestressing in which the tendons are tensioned after the concrete has reached a predetermined strength.

Post tensioning Duct – A form device used to provide a path for post tensioning tendons or bars in hardened concrete. The following types are in general use:

> **Rigid Duct** – Seamless tubing stiff enough to limit the deflection of a 20 foot length supported at its ends to not more than 1 inch.
>
> **Semirigid Duct** – A corrugated duct of metal or plastic sufficiently stiff to be regarded as not coilable into conventional shipping coils without damage.
>
> **Flexible Duct** – A loosely interlocked duct that can be coiled into a 4 foot diameter without damage.

Precast Members – Concrete elements cast in a location other than their final position.

Prestressed Concrete – Concrete components in which stresses and deformations are introduced by application of prestressing forces.

Pretensioning – A method of prestressing in which the strands are tensioned before the concrete is placed.

Reinforced Concrete – Structural concrete containing no less than the minimum amounts of prestressing tendons or nonprestressed reinforcement specified in AASHTO.

Reinforcement – Reinforcing bars and/or prestressing steel.

Special Anchorage Device – Anchorage device whose adequacy should be proven in a standardized acceptance test. Most multiplane anchorages and all bond anchorages are Special Anchorage Devices.

Specified Strength of Concrete – The nominal compressive strength of concrete specified for the work and assumed for design and analysis of new structures.

Spiral – Continuously wound bar or wire in the form of a cylindrical helix.

Temperature Gradient – Variation of temperature of the concrete over the cross-section.

Tendon – A high-strength steel element used to prestress the concrete.

Transfer – The operation of imparting the force in a pretensioning anchoring device to the concrete.

Transfer Length – The length over which the pretensioning force is transferred to the concrete by bond and friction in a pretensioned member.

Wobble Friction – The friction caused by the deviation of a tendon duct or sheath from its specified profile.

Yield Strength – The specified yield strength of reinforcement.

NOTATIONS

f'_c	=	specified compressive strength of concrete at 28 days (psi).
f'_{ci}	=	specified compressive strength of concrete at time of initial loading or prestressing; nominal concrete strength at time of application of tendon force.
f_s	=	allowable stress in reinforcing steel (psi).
f_{sy}	=	specified minimum yield strength of shear reinforcing bars.
f_y	=	specified minimum yield strength of reinforcing bars.
f'_s	=	specified minimum tensile strength of prestressing strands.
f^*_y	=	specified minimum yield strength of prestressing strands.
jd	=	effective depth of member.
A_v	=	area of shear reinforcing.
V_u	=	ultimate factored shear force.
V_c	=	shear capacity of concrete.
s	=	spacing of shear reinforcing (inch)
b'	=	width of web (inch)
f_{cds}	=	average concrete compressive stress at the c.g. of the pretressing steel under full dead load (Article 9.16)
K	=	friction wobble coefficient per foot of prestressing steel (Article 9.16)
μ	=	friction curvature coefficient (Article 9.16)
NL	=	total number of traffic lanes from AASHTO Article 3.6
N_g	=	number of longitudinal beams
C	=	K(W/L), a stiffness parameter
K	=	Constant, see Table under Distribution of Loads.
W	=	overall width of bridge in feet
L	=	span length of bridge in feet

REINFORCED CONCRETE

General Requirements

Reinforced concrete design criteria shall be as specified in Section 8 of the AASHTO Standard Specifications for Highway Bridges except as clarified or modified in this guideline.

Design Methods

In accordance with the applicable provisions of AASHTO, the Service Load Design method (Allowable Stress Design) shall be used for the design of all reinforced concrete members except columns, sound barrier walls and bridge railings. Columns and sound

barrier walls shall be designed by the Strength Design method (Load Factor Design). Bridge railing design for new bridges shall be based on the AASHTO LRFD Bridge Design Specifications.

Concrete

Concrete for highway structures shall be ADOT Class 'S' with the following minimum strengths:

Type	f'_c (psi)
Decks except barriers	4500
Abutments	3000
Piers except footings	3500
Drilled Shafts	3500
F-shape bridge barrier & sidewalks	4000
All other Class 'S' Concrete	3000

Modulus of Elasticity

For normal weight concrete the modulus of elasticity in psi shall be assumed to be $57{,}000\sqrt{f'_c}$.

Reinforcement

Concrete shall be reinforced only with deformed bars conforming to ASTM A615/A615M-96a, except for smooth wire spiral ties. Welded wire reinforcing shall only be used in slope paving and prefabricated panels such as used for sound barrier walls. All reinforcing bars shall be supplied as Grade 60. All transverse deck reinforcing shall be designed using an allowable stress f_s = 20 ksi. All other reinforcing bars shall be designed using an allowable stress f_s = 24 ksi for Service Load Design or f_y = 60 ksi for Strength Design Method.

Minimum Reinforcement

In satisfying the minimum reinforcement criteria, the applied moment should be calculated from the allowable stresses using the Working Stress Design Method and multiplied by 1.2. This value should be less than the ultimate capacity of the section calculated using the Load Factor Design Method when multiplied by the capacity reduction factor, phi.

Diaphragms

A single 9 inch thick intermediate diahragm shall be placed at the midspan for all girder bridges. Special consideration for additional diaphragms should be given to box girders with large skews, curved boxes and boxes over 7 feet in depth. Diaphragms shall be placed parallel to abutments and piers for skews less than or equal to 20 degrees and normal to girders and staggered for skews over 20 degrees. Diaphragms shall be cast integral with girder webs.

Hooks and Bends

Reinforcing bar bend requirements shall be determined in accordance with AASHTO requirements as tabulated in Table 1, 2 and 3.

Development Length

Basic development lengths (inches) for reinforcing shall be determined in accordance with AASHTO as tabulated in Table 4.

Basic development lengths for hooks in tension shall be determined in accordance with AASHTO as tabulated in Table 5.

TABLE 1

180° STD. HOOK DIMENSIONS – MAIN STEEL.

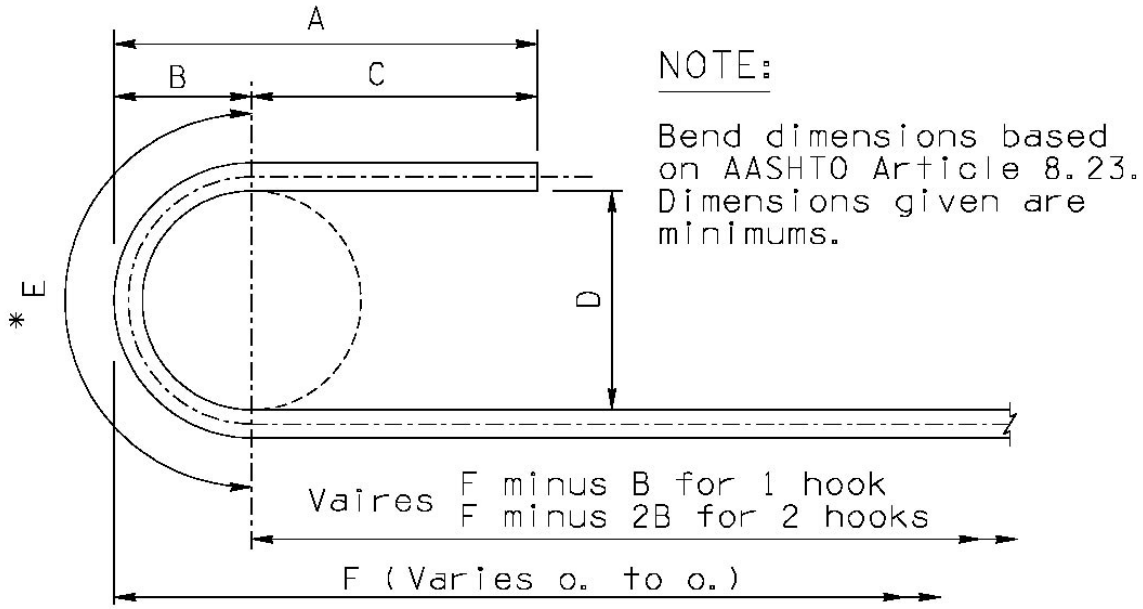

* E measured on ℄

BEND DIAGRAM

BEND DIMENSIONS (inches)										
BAR NO.	BAR DIA.	D	C	B	A	E			TOTAL BAR LENGTH ADD TO F	
									1 HOOK	2 HOOKS
#3	.375	2 1/4	2 1/2	1 1/2	4	4 1/8			5 1/8	10 1/4
#4	.500	3	2 1/2	2	4 1/2	5 1/2			6	12
#5	.625	3 3/4	2 1/2	2 1/2	5	6 7/8			6 7/8	13 3/4
#6	.750	4 1/2	3	3	6	8 1/4			8 1/4	16 1/2
#7	.875	5 1/4	3 1/2	3 1/2	7	9 5/8			9 5/8	19 1/4
#8	1.000	6	4	4	8	11			11	22
#9	1.128	9	4 1/2	5 5/8	10 1/8	15 7/8			14 3/4	29 1/2
#10	1.270	10 1/8	5 1/8	6 3/8	11 1/2	17 7/8			16 5/8	33 1/4
#11	1.410	11 1/4	5 5/8	7	12 5/8	19 7/8			18 1/2	37
#14	1.693	17	6 3/4	10 1/4	17	29 3/8			25 7/8	51 3/4
#18	2.257	22 5/8	9	13 5/8	22 5/8	39 1/8			34 1/2	69

TABLE 2

90° STD. HOOK DIMENSIONS – MAIN STEEL.

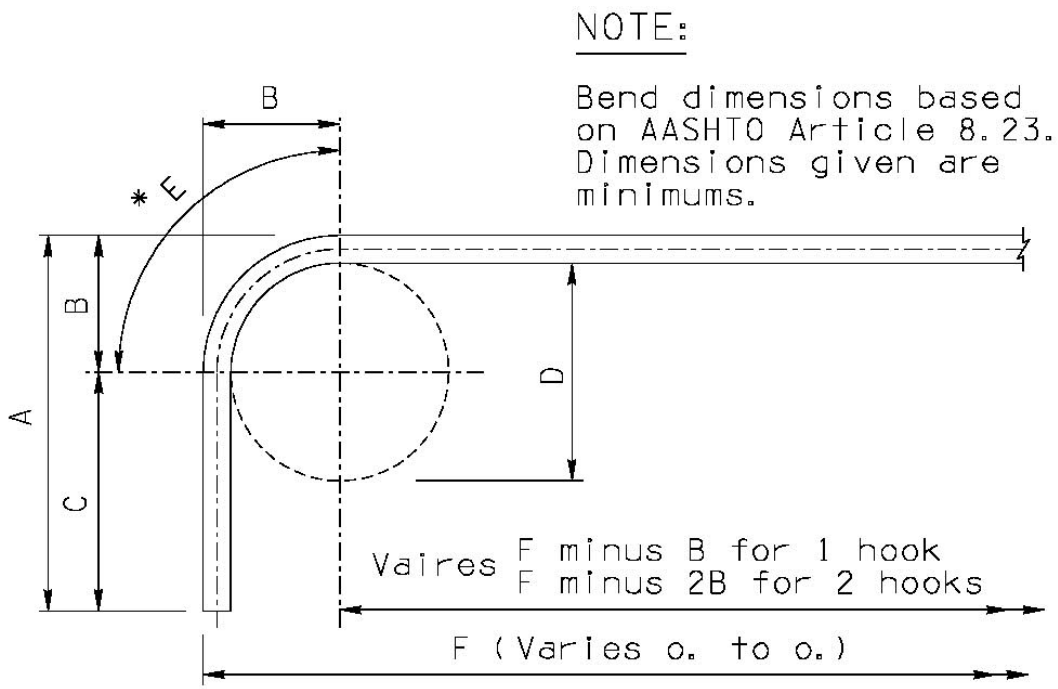

BEND DIAGRAM

BEND DIMENSIONS (inches)										
BAR NO.	BAR DIA.	D	C	B	A	E			TOTAL BAR LENGTH ADD TO F	
									1 HOOK	2 HOOKS
#3	.375	2¼	4½	1½	6	2			5	10
#4	.500	3	6	2	8	2¾			6¾	13½
#5	.625	3¾	7½	2½	10	3½			8½	17
#6	.750	4½	9	3	12	4⅛			10⅛	20¼
#7	.875	5¼	10½	3½	14	4¾			11¾	23½
#8	1.000	6	12	4	16	5½			13½	27
#9	1.128	9	13½	5⅝	19⅛	8			15⅞	31¾
#10	1.270	10⅛	15¼	6⅜	21⅝	9			17⅞	35¾
#11	1.410	11¼	16⅞	7	23⅞	10			19⅞	39¾
#14	1.693	16⅞	20⅜	10⅛	30½	14⅝			24⅞	49¾
#18	2.257	22⅝	27⅛	13⅝	40¾	19½			33	66

TABLE 3

STANDARD HOOKS FOR STIRRUPS AND TIES

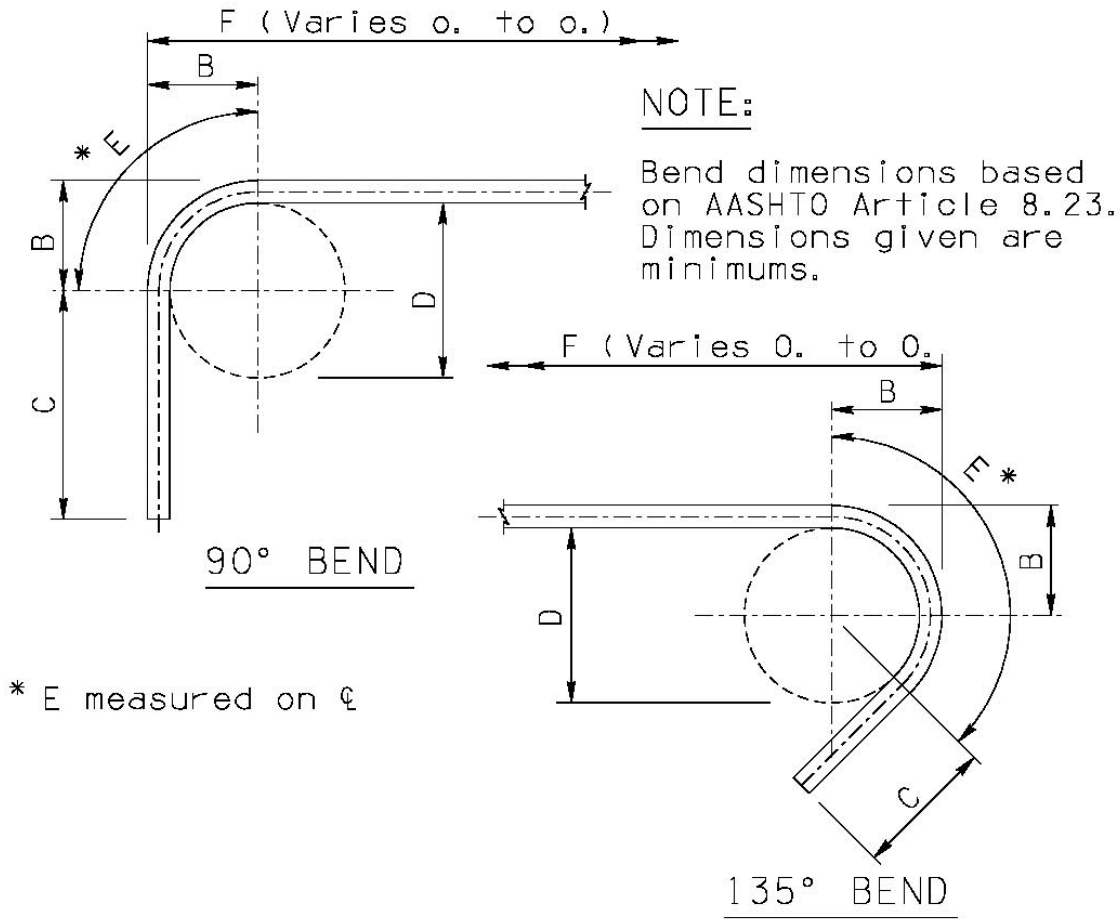

BEND DIAGRAMS

BEND DIMENSIONS (inches)											
BAR NO.	BAR DIA.	D	C 90°	C 135°	B	E 90°	E 135°	TOTAL BAR LENGTH ADD TO F			
								1-90°	2-90°	1-135°	2-135°
#3	.375	1½	2¼	2¼	1⅛	1½	2¼	2⅝	5¼	3⅜	6¾
#4	.500	2	3	3	1½	2	3	3½	7	4½	9
#5	.625	2½	3¾	3¾	1⅞	2½	3⅝	4⅜	8¾	5½	11
#6	.750	4½	9	4½	3	4⅛	6¼	10⅛	20¼	7¾	15½
#7	.875	5¼	10½	5¼	3½	4¾	7¼	11¾	23½	9	18
#8	1.000	6	12	6	4	5½	8¼	13½	27	10¼	20½

TABLE 4

BASIC DEVELOPMENT LENGTH (INCHES)

f_y = 60,000 psi

Bar Size	f'_c=3000 psi	f'_c=3500 psi	f'_c=4500 psi	f'_c=5000 psi	f'_c=6000 psi
#3	9.0*	9.0*	9.0*	9.0*	9.0*
#4	12.0	12.0	12.0	12.0	12.0
#5	15.0	15.0	15.0	15.0	15.0
#6	19.3	18.0	18.0	18.0	18.0
#7	26.3	24.3	21.5	21.0	21.0
#8	34.6	32.0	28.3	26.8	24.5
#9	43.8	40.6	35.8	33.9	31.0
#10	55.6	51.5	45.4	43.1	39.3
#11	68.4	63.3	55.8	52.9	48.3
#14	93.1	86.2	76.0	72.1	65.8
#18	120.5	111.6	98.4	93.3	85.2

Note: Based on AASHTO Article 8.25

MODIFICATION FACTORS	
Top bars	1.4
Epoxy coated ♦ less than 3 d_b cover or 6 d_b clear spacing ♦ all other cases	 1.5 ** 1.15
Lateral spacing ≥ 6” with min. 3” cl.	0.8
Excess reinforcement - **(As required) ≤ (As provided)**	1.0
Enclosed within spirals (1/4” Φ and 4” pitch)	0.75

*The development length, l_d, shall not be less than 12” except in computation of lap splices by Article 8.32.3 and development of shear reinforcement by Article 8.27.

**For epoxy coated top bars use product of 1.7.

TABLE 5

DEVELOPMENT OF STANDARD HOOKS IN TENSION (INCHES)

fy = 60,000 psi

Bar Size	f'_c=3000 psi	f'_c=3500 psi	f'_c=4500 psi	f'_c=5000 psi	f'_c=6000 psi
#3	8.2	7.6	6.7	6.4	5.8
#4	11.0	10.1	8.9	8.5	7.7
#5	13.7	12.7	11.2	10.6	9.7
#6	16.4	15.2	13.4	12.7	11.6
#7	19.2	17.7	15.7	14.8	13.6
#8	21.9	20.3	17.9	17.0	15.5
#9	24.7	22.9	20.2	19.1	17.5
#10	27.8	25.8	22.7	21.6	19.7
#11	30.9	28.6	25.2	23.9	21.8
#14	37.1	34.3	30.3	28.7	26.2
#18	49.4	45.8	40.4	38.3	35.0

Note: Based on AASHTO Article 8.25

Excess reinforcement where anchorage or development for f_y is not specifically required, reinforcement in excess of that required by analysis = **(As required) / (As provided)**.

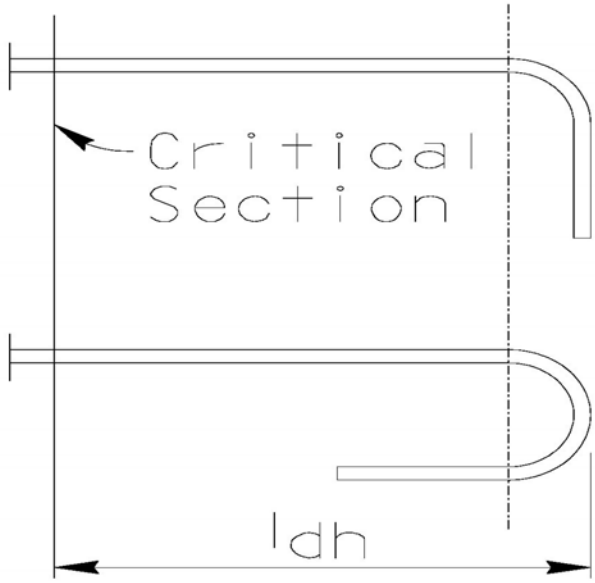

PRESTRESSED CONCRETE

General Requirements

Prestressed design criteria shall be as specified in Section 9 of the AASHTO Standard Specifications for Highway Bridges except as clarified or modified in this guideline.

Members shall be designed to meet both Service Load Design and Strength Design criteria as specified in AASHTO.

Prestressing steel for precast prestressed members and cast-in-place post-tensioned members shall be "Uncoated Seven-wire Low Relaxation Strand for Prestressed Concrete" as specified in AASHTO M203 with f'_s = 270 ksi. Normally ½" diameter strands will be specified. For long span I-girder bridges use of 0.6 inch diameter strand should be evaluated. Use of 0.6 inch diameter strand is allowed for cast-in-place post-tensioned members.

The yield point stress of prestressing steel, f^*_y, may be assumed equal to 0.90 f'_s for low relaxation strand and 0.85 f'_s for stress relieved strand.

Prestress losses shall be calculated in accordance with AASHTO Article 9.16.2.1. The estimated losses contained in Table 9.16.2.2 and Article 9.16.2.2 shall not be used.

Section properties shall be based on gross area of members for cast-in-place post-tensioned members. Section properties shall be based on transformed area of bonded prestressing strand for precast prestressed members.

Web reinforcement shall consist of stirrups; not welded wire reinforcing.

The minimum top cover for deck slab reinforcement specified in AASHTO Article 9.25.1.2.1 shall be 2.5 inches.

Expansion and contraction design criteria shall be as specified in Section 14 – Joints and Bearings of these guidelines.

Allowable Stresses – Concrete

The maximum allowable tension in a precompressed tensile zone at service load after losses have occurred including the allowable overstresses due to group loadings shall be limited to the values shown below.

AASHTO Load Combinations					
Groups	Final DL + P/S	I	II-IV	V-VI	VII
Allowable Stress	0	$3\sqrt{f'_c}$	$4.5\sqrt{f'_c}$	$5.4\sqrt{f'_c}$	$5\sqrt{f'_c}$

Shear

Shear design shall be in accordance with Ultimate Strength Design Method contained in the AASHTO 1979 Interim Specifications as repeated below:

Prestressed concrete members shall be reinforced for diagonal tension stresses. Shear reinforcement shall be placed perpendicular to the axis of the member.

The area of web reinforcement shall be

$A_v = (V_u - V_c)s/(2\ f_{sy}\ j\ d)$

But not less than

$A_v = 100\ b's/f_{sy}$

Where f_{sy} shall not exceed 60,000 psi.

$V_c = 0.06\ f'_c\ b'j\ d$ but not more than $180\ b'\ j\ d$

Web reinforcement shall consist of stirrups perpendicular to the axis of the member.

The spacing of web reinforcement shall not exceed three-fourths the depth of the member.

The critical sections for shear in simply supported beams will usually not be near the ends of the span where the shear is a maximum, but at some point away from the ends in a region of high moment.

For the design of web reinforcement in simply supported members carrying moving loads, it is recommended that shear be investigated only in the middle half of the span length. The web reinforcement required at the quarter points should be used throughout the outer quarters of the span.

For continuous bridges whose individual spans consist of precast prestressed girders, web reinforcement shall be designed for the full length of interior spans and for the interior three-quarters of the exterior span.

Post-Tensioned Box Girder Bridges

CONCRETE

Concrete for highway structures shall be ADOT Class 'S' with the specified minimum initial and final concrete strengths as shown below. Higher strength concrete may only be used when required by design and when approved.

	Initial	Final
Min.	f'_{ci} = 3500 psi	f'_c = 4500 psi
Max.		f'_c = 5000 psi

CREEP AND SHRINKAGE

For restrained members in continuous bridges where shortening due to post-tensioning induces moments and shears, a shrinkage and creep coefficient of 1.5 shall be used for design of substructure elements with the total movement equal to 1.5 times the initial shortening. For superstructure elements, no creep factor should be applied.

FLANGE AND WEB THICKNESS – BOX GIRDERS

Minimum top slab thickness shall be 7.5 inches. Minimum bottom slab thickness shall be 6 inches. Minimum web thickness shall be 12 inches (measured normal to girder for sloping exterior webs). Interior webs shall be constructed vertical. A 4" x 4" fillet shall be used at the tops of interior webs but is not required at the bases.

DIAPHRAGMS

A single 9 inch thick intermediate diaphragm shall be placed at the midspan for all box girder bridges. Special consideration for additional diaphragms shall be given to box girders with large skews, curved boxes and boxes over seven feet in depth. Diaphragms shall be placed parallel to abutments and piers for skews less than or equal to 20 degrees and normal to girders and staggered for skews over 20 degrees. Diaphragms shall be cast integral with girder webs to add lateral stability to the forming system.

DEFLECTIONS

The deflection shall be calculated using the dead load including barriers but not the future wearing surface, a modulus of elasticity, $E_c=57\sqrt{f'_c}$ ksi, gross section properties and calculated final losses. The additional long term deflection shall be calculated by multiplying the deflection by two. An additional parabolic shaped deflection with a peak equal to 3/8 inches per 100 feet should be added to the total deflection for simple spans. The final long term deflection shall be the sum of the deflection, the additional long term deflection and the additional deflection for simple spans. The camber shown on the plans shall be the final long term deflection.

ALLOWABLE STRESSES – PRESTRESSING STEEL

In calculating the stress in the prestressing steel after seating, the friction and anchor set losses only should be included.

For post-tensioned members, overstressing for short periods of time to offset seating and friction losses is permitted but the maximum allowable jacking stress for low relaxation strand shall be limited to 0.78 f'_s.

ALLOWABLE STRESSES - CONCRETE

The allowable compressive stress in concrete shall be limited to 0.40 f'_c.

In calculating the temporary stress in the concrete before losses due to creep and shrinkage, the friction, anchor set and elastic shortening losses should be included.

Special consideration shall be given to bridges supported on falsework with large openings where deflections could be harmful to the structure. Unless falsework requirements are strengthened or other means taken to ensure the bridge does not form tension cracks prior to tensioning, the maximum allowable tension in a precompressed tensile zone shall be limited to zero.

LOSS OF PRESTRESS

For multi-span bridges, the cable path should have its low point at the midspan. Design should be based on usage of galvanized rigid ducts with $K = 0.0002$ and $\mu = 0.25$. Anchor set losses should be based on 3/8 inch set.

For creep of concrete, the variable f_{cds}, should be calculated using the total dead load applied after prestressing, including the 25 psf future wearing surface.

FLEXURAL STRENGTH

In determining the negative ultimate moment capacity, the top layer of temperature and shrinkage reinforcing and bottom layer of distribution reinforcing may be used. In determining the positive ultimate moment capacity, the longitudinal flange reinforcing (AASHTO 9.34) may be used.

SHEAR

The value of "d" to be used in shear calculations shall be the larger of the calculated "d" value of 0.8 times the overall effective depth.

Horizontal shear shall be investigated in accordance with the provisions of AASHTO 9.20.4.

The maximum web stirrup spacing shall be 12 inches within 20 feet from the front face of the abutment diaphragm. This will eliminate the need for respacing web stirrups at the point of web flare if the post-tensioning system used requires flaring.

Calculations shall include the shear due to secondary moment and cable shear. For curved box girder bridges, the shear due to torsion shall be included.

ANCHORAGE ZONES

A 4" x 4" grid of #4 reinforcing behind the anchorage plate shall be used and shall be detailed on the plans. When an anchorage device requires a spiral and/or supplemental reinforcing, the approved spiral and/or supplemental reinforcing shall be in addition to the #4 grid. When a spiral on the end anchorage of a tendon conflicts with the grid system, the rebars in the grid may be respaced or cut as required.

Design of the anchorage zone shall be in accordance with AASHTO Article 9.21 using the strut and tie method analysis for most normal applications with the following exceptions:

> The approximate methods contained in Article 9.21.16 should not be used.
>
> The testing requirements for special anchorage devices may be waived for anchorage systems which have been tested and approved for use by Caltrans, provided documentation is presented and the same reinforcing is used as was used in the Caltrans testing. All reinforcing shown within the local zone region as defined in AASHTO shall be included.

C-shaped reinforcing consisting of #6 @ 4" with 3'-0 tails shall be placed along the exterior face of exterior web for the length of the diaphragm to aid in resisting bursting stresses. Careful design is required for external anchor blocks.

FLANGE REINFORCEMENT

Reinforcing in the bottom slab of box girders shall conform to the provisions of AASHTO 8.17.2.3 except that the minimum distributed reinforcing in the bottom flanges parallel to the girders as specified in AASHTO 8.17.2.3.1 shall be modified to be 0.30 percent of the flange area.

METHOD OF ANALYSIS

The superstructure may be designed using BDS or the California Frame System Program 212-070 as described below:

> 1. The bottom slab, in the vicinity of the intermediate support, may be flared to increase its thickness at the face of the support when the required concrete strength exceeds 4500 psi. When thickened, the bottom slab thickness should be increased by a minimum of 50 percent. The length of the flare should be at least one-tenth of the span length (measured from the center of the support) unless design computations indicate that a longer flare is required.
>
> 2. Section properties at the face of the support should be used throughout the support; i.e. the solid cap properties should not be included in the model.
>
> 3. Negative moments should be reduced to reflect the effect of the width of the integral support.

4. The combination of dead load and prestress forces should not produce any tension in the extreme fibers of the superstructure.

5. In calculating the number of lanes of live load on the superstructure, the entire cross section of the superstructure shall be considered as one unit with the number of lanes of live load equal to the out-to-out width of the deck divided by 14. Do not reduce this number for multiple lanes as specified in AASHTO 2.12.1 nor round to a whole number as specified in AASHTO 3.6.3. These two reductions apply to substructure design only.

For box girders with severe sloping webs or boxes over 7 feet deep, transverse flange forces induced by laterally inclined longitudinal post-tensioning shall be considered in the design.

Single span structures should be jacked from one end only. Symmetrical two span structures may be jacked from one end only or jacked from both ends. Unsymmetrical bridges should be jacked from the long end only or from both ends as required by the design. Three span or longer structures should be jacked from both ends.

Several prestressing systems should be checked to verify that the eccentricity and anchorage details will work. In determining the center of gravity of the strands, the z factor, the difference between the center of gravity of the strands and the center of the ducts, shall be considered. For structures over 400 feet in length, in determining the center of gravity of the strands, the diameter of the ducts should be oversized by ½ inch to allow for ease of pulling the strands.

For horizontally curved bridges, special care shall be taken in detailing stirrups and duct ties. Friction losses should be based on both vertical and horizontal curvatures. The CALTRANS Memo to Designers 11-30 and the article titled "The Cause of Cracking in Post-Tensioned Concrete Box Girder Bridges and Retrofit Procedures" by Walter Podolny should be read by all designers of curved post-tensioned box girder bridges. Recommended design criteria shall be incorporated accordingly. In designing for horizontal curvature, the exterior web with the smallest radius shall be used. Consideration to the ±5 % variation allowed per web shall be included.

Prestressed Precast Concrete

CONCRETE

Concrete for highway structures shall be ADOT Class 'S' with the minimum specified initial and final concrete strengths as shown below. Higher strength concrete may only be used when required by design and when approved.

	Initial	Final
Min.	f'_{ci} = 4000 psi	f'_c = 5000 psi
Max.	f'_{ci} = 4500 psi	f'_c = 6000 psi

Local prestressers can easily obtain 4500 psi release strengths within 18 hours but require 4 to 6 additional hours for each additional 100 psi strength required above 4500 psi.

DEFLECTIONS

The Release, Initial and Final Deflections shall be shown on the plans. Deflections shall be shown in thousandths of a foot at the tenth points of each span.

The Release Deflection equals the deflection the prestress girder undergoes at the time of strand release. The Release Deflection includes the dead load of the girder and the release prestressing force including the effects of elastic shortening.

The Initial Deflection equals the deflection the prestress girder undergoes at the time of erection prior to the diaphragm or deck pours. The Initial Deflection includes the deflection due to the dead load of the girder, the initial prestressing and the effects of creep and shrinkage up to the time of erection. The time of erection should be assumed to be 60 days after release.

The Final Deflection equals the deflection due to the dead load of the deck slab, diaphragms and barriers and the efffects of long term creep on the composite girders. The effects of the 25 psf future wearing surface shall be excluded from deflection calculations.

Minimum build-up at the edge of Type III girders and smaller shall be ½ inch. For Type IV, V and VI girders the minimum build-up shall be 1 inch. This minimum build-up at the critical section will ensure that the flange of the girder will not encroach into the gross depth of the slab.

The tops of the erected girders shall be surveyed in the field prior to placement of the deck forming. If the tops of the erected girder elevations are higher than the finish grade plus camber elevations minus deck slab and buildup thickness, adjustments will have to be made in the roadway profile or in the girder seat elevations. Encroachment into the slab of up to ½ inch will be allowed for random occurrences.

ALLOWABLE STRESSES – PRESTRESSING STEEL

For pretensioned members, overstressing the prestressing steel for short periods of time to offset seating losses is not permitted.

ALLOWABLE STRESSES - CONCRETE

The allowable compressive stress in concrete shall be limited to 0.40 f'_c.

In calculating the temporary stress in concrete before losses due to creep and shrinkage, the steel relaxation prior to release and the elastic shortening should be included.

LOSS OF PRESTRESS

For creep of concrete, the variable f_{cds}, should be calculated using the total dead load applied after prestressing including the 25 psf future wearing surface.

For girders with required concrete release strengths of 4500 psi or less, the time of release may be assumed to be 18 hours. For specified strengths over 4500 psi the time of release should be increased accordingly. For precast girders, the final losses shall include release losses.

The value of relative humidity to be used in calculating shrinkage losses, shall be the value of relative humidity at the bridge site.

SHEAR

The value of "d" to be used in shear calculations shall equal the depth of the beam plus the effective depth of the slab with a minimum d = 0.80 times the overall depth. The shear shall be calculated assuming full continuity for composite dead load and live load plus impact.

For single span structures, use the shear design spacing at the ¼ point. For continuous multi-span structures, use the shear design spacing required from the ¼ point to the pier for the section from the ¼ point to the abutment end to obtain a symmetrical reinforcing pattern for all girders.

METHOD OF ANALYSIS

The dead load shall be assumed to be unsupported and carried by the girders only.

Girders shall be designed using the pretensioning method only. Post-tensioned alternates shall be used only for large projects when approved.

Use of masked strands for debonding shall not be allowed.

The location of the harped point of the strand should be located as required by design with the preferable locations being near the 1/10 of the span as measured from the midspan of the girder.

Prestressed Precast I-Girders

FRAMES AND CONTINUOUS CONSTRUCTION

Girders shall be designed as composite section, simple supported beams for live load plus impact and composite dead load. The superstructure shall be constructed continuous with the negative moment reinforcing designed considering continuity over intermediate supports for live load plus impact and composite dead loads. The positive moment connection may be designed using the method described in the PCA publication "Design of Continuous Highway Bridges with Precast, Prestressed Concrete Girders". In determining the positive restraint moment, use 30 days as the length of time between casting the girders and deck closure. The development length of the strands may be based on the criteria contained in Report No. FHWA-RD-77-14, "End Connections of Pretensioned I-Beam Bridges" November 1974. In determining the number and pattern of strands extended, preference shall be given to limiting the number of strands by increasing the extension length and alternating the pattern to increase constructibility. Refer to Figure 1.

EFFECTIVE FLANGE WIDTH

The effective flange width of the composite slab shall be calculated according to AASHTO. For effective flange width calculations, the web shall be considered equal to the width of the top flange of the beam except for Type V and VI regular and modified girders where this value shall be reduced 8 ½ inches per side.

DIAPHRAGMS

A single 9 inch thick intermediate diaphragm shall be placed at the midspan for all spans over 40 feet. For skews less than or equal to 20 degrees, the diaphragm shall be placed parallel to the skew. For skews greater than 20 degrees, the diaphragms shall be staggered and placed normal to the girder.

DIFFERENTIAL SHRINKAGE

Differential shrinkage should be considered in the design when the effects become significant and when approved.

METHOD OF ANALYSIS

AASHTO Type V and Type VI modified girders should be used in place of Type V and Type VI regular girders whenever possible.

The theoretical build-up depth shall be ignored for calculation of composite section properties.

FIGURE 1
STRAND PATTERN AT GIRDER END.

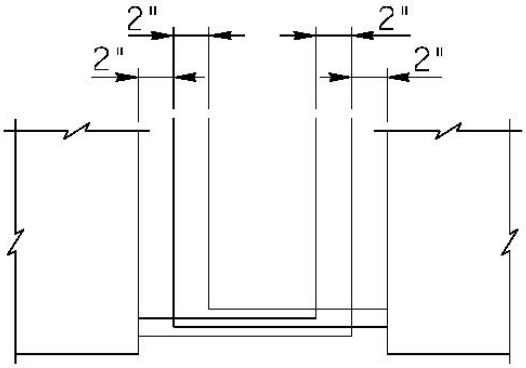

ELEVATION

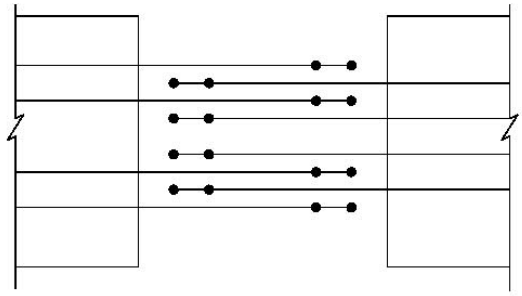

PLAN

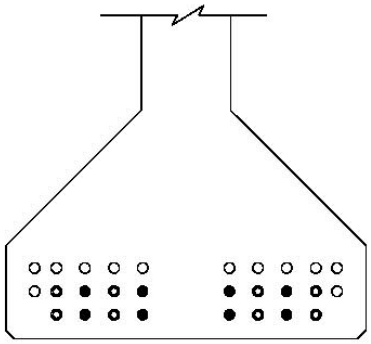

TYPICAL SECTION

○ Strands cut flush with girder end.

◐ Extended strands.

● Extended strands for adjacent girder.

Prestressed Precast Voided Slabs

END BLOCKS

End blocks should be 15 inches long with sufficient mild reinforcing provided to resist the tensile forces due to concentrated prestressing loads.

DIAPHRAGMS

Diaphragms shall be cast within the slab at midspan for spans up to 40 feet and at third points for spans over 40 feet.

LATERAL TIES

One lateral tie shall be provided through each diaphragm located at the mid-depth of the section.

Each tie shall consist of a 1½ inch diameter mild steel bar tensioned to 30,000 pounds. Tension in the 1½ inch diameter mild steel should be applied by the turn of nut method. The designer should determine the number of turns of the nut required to achieve the 30,000 pounds force. This value should be shown on the plans.

A36 steel bars for the tie normally come in 20 foot lengths. The final total length of the tie should be made using threaded couplers; not welded splices. When couplers are used, the hole through the diaphragm should be increased from the normal 2½ inches to 4 inches diameter to accommodate the couplers.

Adequate means shall be used to ensure that the ties are adequately protected from corrosion. The rod, nut and bearing plate shall be galvanized in accordance with ASTM A153 (AASHTO M-232).

SHEAR KEYS

After shear keys have been filled with an approved non-shrink mortar, lateral ties shall be placed and tightened.

BARRIERS

Barriers shall have a ½ inch open joint at the midspan to prevent the barrier from acting as an edge beam and causing long term differential deflection of the exterior beam.

DISTRIBUTION OF LOADS

The equations for distribution of live load contained in the Standard Specifications, Sixteenth Edition (1996) including Interims shall not be used. The distribution factors, initially changed in the Fourteenth Edition (1989), are based on tests on T-beams and are not deemed appropriate for voided slabs or box beams. Instead, the equations in the Thirteenth Edition (1983) as repeated below shall be used to distribute live loads:

In calculating bending moments in multi-beam precast concrete bridges, conventional or prestressed, no longitudinal distribution of wheel load shall be assumed.

The live load bending moment for each section shall be determined by applying to the beam the fraction of a when load (both front and rear) determined by the following relations:

Load Fraction = S/D

Where

$S = (12\ NL + 9)/N_g$

$D = 5 + NL/10 + (3-2NL/7)(1-C/3)^2$ when $C <= 3$

$D = 5 + NL/10$ when $C > 3$

NL = total number of traffic lanes from AASHTO Article 3.6
N_g = number of longitudinal beams
C = K(W/L), a stiffness parameter
W = overall width of bridge in feet
L = span length in feet

Values of K to be used in C = K(W/L)

Bridge Type	**Beam Type**	
Multi-beam	Non-voided rectangular beams	0.7
	Rectangular beams with circular voids	0.8
	Box section beams	1.0
	Channel beams	2.2

Prestressed Precast Box Beams

END BLOCKS

End blocks 18 inches long shall be provided at each end and sufficient mild reinforcing shall be provided in the end blocks to resist the tensile forces due to the prestressing loads.

DIAPHRAGMS

Diaphragms, cast within the beam, shall be provided at the midspan for spans up to 50 feet, at the third points for spans from 50 to 75 feet and at quarter points for spans over 75 feet.

LATERAL TIES

One lateral tie shall be provided through each diaphragm located at the mid-depth of the section. However, for the 39 inch and 42 inch deep sections, when adjacent units are tied in pairs for skewed bridges, in lieu of continuous ties, two ties shall be provided, located at the third points of the section depth.

Each tie shall consist of a 1½ inch diameter mild steel bar tensioned to 30,000 pounds. Tension in the 1½ inch diameter mild steel should be applied by the turn of nut method. The designer should determine the number of turns of the nut required to achieve the 30,000 pounds force. This value should be shown on the plans.

A36 steel bars for the tie normally come in 20 foot lengths. The final total length of the tie should be made using threaded couplers; not welded splices. When couplers are used, the hole through the diaphragm should be increased from the normal 2½ inches to 4 inches diameter to accommodate the couplers.

Adequate means shall be used to ensure that the ties are adequately protected from corrosion. The rod, nut and bearing plate shall be galvanized in accordance with ASTM A153 (AASHTO M-232).

SHEAR KEYS

After shear keys have been filled with an approved non-shrink mortar, lateral ties shall be placed and tightened.

DISTRIBUTION OF LOADS

The equations for distribution of live load contained in the Sixteenth Edition (1996) including Interims, shall not be used. Refer to Distribution of Loads in Section titled Prestressed Precast Voided Slabs of this guideline for criteria on distribution of loads.

Arizona Department of Transportation
Bridge Group

BRIDGE PRACTICE GUIDELINES

SECTION 6- STEEL STRUCTURES

Chapter	Page	Issue Date
SCOPE	3	7/2/01
DEFINITIONS	3	7/2/01
GENERAL DESIGN REQUIREMENTS	4	7/2/01
Design Specifications	4	7/2/01
Design Loads	5	7/2/01
Temperature	5	7/2/01
Other Loads	5	7/2/01
MATERIALS	5	7/2/01
General	5	7/2/01
Pins, Rollers and Rockers	5	7/2/01
Fasteners – Bolts, Nuts and Washers	5	7/2/01
Structural Steel	6	7/2/01
Stud Shear Connectors	6	7/2/01
Weld Metal	6	7/2/01
Cast Metal	6	7/2/01
Stainless Steel	6	7/2/01
Structural Tubing	6	7/2/01
Cables	6	7/2/01
FATIGUE AND FRACTURE CONSIDERATIONS	7	7/2/01
Allowable Fatigue Stresses	7	7/2/01
Load Cycles	7	7/2/01
Transverse Connection Plates	7	7/2/01
Charpy V – Notch Impact Requirement	7	7/2/01

DIMENSION AND DETAIL REQUIREMENTS	**7**	**7/2/01**
Effective Length of Span	**7**	**7/2/01**
Dead Load Camber	**8**	**7/2/01**
Minimum Thickness of Steel	**8**	**7/2/01**
Diaphragms and Cross-Frame	**8**	**7/2/01**
Lateral Bracing	**8**	**7/2/01**
TENSION MEMBERS	**8**	**7/2/01**
COMPRESSION MEMBERS	**9**	**7/2/01**
STIFFENERS	**9**	**7/2/01**
Figure 1 – Stiffener Plate Details	**11**	**7/2/01**
CONNECTIONS	**10**	**7/2/01**
SPLICES	**12**	**7/2/01**

SCOPE

This section contains guidelines to supplement provisions of Section 10 of the AASHTO Standard Specifications for the analysis and design of steel components, splices and connections for beam and girder structures, frames, trusses and arches, as applicable. Metal deck systems are covered in Section 9.

DEFINITIONS

Beam – A structural member whose primary function is to transmit loads to the support primarily through flexure and shear. Generally, this term is used when the component is made of rolled shapes.

Buckling – Stress failure below the elastic limit in compression member.

Charpy V-Notch Impact Requirement – The minimum energy required to be absorbed in a Charpy V-notch test conducted at a specified temperature.

Charpy V-Notch Test – An impact test complying with AASHTO T253 (ASTM A673).

Compression Members – Prismatic non-composite and composite steel members with at least one plane of symmetry and subjected to either axial compression or combined axial compression and flexure about an axis of symmetry.

Connection and Splices – Fasteners (Rivets and Bolts) and welds are the mechanical means to form a connection or splice between two steel sections at which is subjected to moment and/or shear.

Cross-frame – A transverse truss framework connecting adjacent longitudinal flexural components.

Diaphragm – A transverse flexural component connecting adjacent longitudinal flexural components.

Dead Load Camber – The camber for steel structure fabrication to compensate for dead load deflection and vertical alignment.

Effective Length of Span – Span length is taken as the distance between centers of bearings or other points of support.

Fatigue – The initiation and/or propagation of cracks due to a repeated variation of normal stress with a tensile component.

Fracture – Material for main load-carrying components subjected tensile stress.

Girder – A structural component whose primary function is to resist loads in flexure and shear. Generally, this term is used for fabricated sections.

Lateral Bracing Member – A component utilized individually or as part of a lateral bracing system to prevent buckling of components and/or to resist lateral loads.

Shear Connector – A mechanical means used at the junction of the girder and slab for the purpose of developing the shear resistance necessary to produce composite action.

Stiffener – Transverse and longitudinal stiffener plates to be welded to the steel girder compression flange and the web and a close spacing to prevent local buckling.

Structural Steel – All rolled section girders, welded plate girders, structural steel plate or shapes used for splice plates. Stiffeners or diaphragms, shear connectors, corresponding weld metal, nuts and bolts, will be measured for payment as structural steel.

Structural Steel (Miscellaneous) – All other structural steel items including rockers, rollers, bearing plates, pins and nuts, brackets, plates, shapes for sign mounts on bridges, steel traffic rail, corresponding weld metal, nuts and bolts, and similar steel items not covered in other contract items will be measured for payment as structural steel (miscellaneous).

Tension Members – Members and splices subjected to axial tension **.**

GENERAL DESIGN REQUIREMENTS

Design Specifications

(as appropriate)with Current Revisions

- AASHTO Standard Specifications for Highway Bridges
- AASHTO Guide Specifications for Steel Fracture Critical Members
- AASHTO Guide Specifications for Strength Design of Truss Bridges
- AASHTO Guide Specifications for Horizontally Curved Highway Bridges
- AASHTO Manual for Condition Evaluation of Bridges
- AASHTO Guide Specifications for Fatigue Design of Steel Bridges
- FHWA-RD94-052 May 1995 Seismic Retrofitting Manual for Highway Bridges
- AASHTO Standard Specifications for Structural Supports for Highway Signs, Luminaires and Traffic Signals
- ANSI/AASHTO/AWS Bridge Welding Code
- AASHTO Guide Specifications for Highway Bridge Fabrication with HPS70W Steel

Design Loads

- Dead Load – weight of structure plus allowance of 25 pounds per square foot for future wearing surface.
- Live Load – AASHTO HS20-44 (truck and equivalent lane loading) with reduction factors for multiple lane loadings.

Major structures may also be designed for one lane CALTRANS P13 (permit overload) with impact but independent of other live and transitory loads.

Temperature

	Elevation		
	up to 3000 ft	3000 ft – 6000 ft	Over 6000 ft
Mean Temperature	70^0 F	60^0 F	50^0 F
Temperature Rise	60^0 F	60^0 F	70^0 F
Temperature Fall	60^0 F	60^0 F	80^0 F

Other Loads

All other applicable loads are in accordance with the requirements of AASHTO Standard Specifications for Highway Bridges.

MATERIALS

General

Materials shall conform to the requirements of AASHTO Article 10.2 with the selection based on stress requirements and overall economy.

Pins, Rollers and Rockers

Steels for pins, rollers, and expansion rockers shall to one of the designations listed in Table 10.2A and 10.2B, or shall be stainless steel conforming to ASTM A 240 or ASTM A 276 HNS 21800.

Fasteners – Bolts, Nuts and Washers

Fastener shall be high-strength bolts, AASHTO M 164 (ASTM A 325) or AASHTO M 253 (ASTM A 490).

Structural Steel

Structural steels shall conform to the material designated in Table 10.2A of AASHTO Standard Specification for Highway Bridges. The modulus of elasticity of all grades of structural steel shall be assumed to be 29,000,000 psi and the coefficient of linear expansion 0.0000065 per degree Fahrenheit.

Stud Shear Connectors

Welded Stud Shear Connectors shall be used and shall conform to the requirements of Cold Finished-Carbon Steel Bars and Shafting. AASHTO M 169 (ASTM A 108), cold drawn bars, grades 1015, 1018, or 1020, either semi- or fully killed. If flux-retaining caps are used, the steel for the caps shall be of a low carbon grade suitable for welding and shall comply with Cold-Rolled Carbon Steel Strip, ASTM A 109.

Weld Metal

Weld metal shall conform to the current requirements of the ANSI/AASHTO/AWS D1.5 Bridge Welding Code.

Cast Metal

Cast metal includes cast steel, ductile iron castings, malleable castings, and cast iron. The material specifications shall conform to Article 10.2.6 of AASHTO Standard Specifications for Highway Bridges.

Stainless Steel

Stainless Steel plate used in the PTFE Sliding Bearing Device as flat mating surface shall be a minimum #8 mirror finish Type 304 stainless steel and shall conform to ASTM A167/A264. Curved metallic surfaces shall not exceed 16 micro in RMS.

Structural Tubing

Structural tubing shall be either cold-formed or seamless tubing conforming to ASTM 500, Grade B or hot-formed welded or seamless tubing conforming to ASTM 501.

Cables

Primary usage is for restraining in bridge seismic retrofit. It shall conform to ¾ in diameter preformed, 6 x 19, wire strand core or independent wire rope core (IWRC), galvanized in accordance with the requirements in Federal Specification RR-W-410D, Right regular lay manufactured of improved plow steel with a minimum breaking strength of 46,000 pounds.

FATIGUE AND FRACTURE CONSIDERATIONS

Allowable Fatigue Stress

The details of fasteners and members including splices, stiffeners, shear connectors and bracings subject to repeated variations or reversals of stress shall be designed using categories A through C details shown in AASHTO, Table 10.3.1B in order to limit the fatigue stress. Category E details shall not be used.

Load Cycles

The stress cycle case to be used in AASHTO Table 10.3.2A shall be Case I.

Transverse Connection Plates

Connection plates shall be welded or bolted to both the compression and tension flanges of the cross-section where

- Connecting diaphragms or cross-frames are attached to transverse connection plates, or transverse stiffeners functioning as connection plates.
- Internal or external diaphragms or cross-frames are attached to transverse connection plates, or transverse stiffeners functioning as connection plates, and
- Floorbeams are attached to transverse connection plates, or transverse stiffeners functioning as connection plates.

Charpy V-Notch Impact Requirement

Where applicable, the Charpy V-Notch impact requirements for structural steel shall be for Temperature Zone 1 at elevations less than 6000 feet and Temperature Zone 2 at elevations 6000 feet and higher.

DIMENSION AND DETAIL REQUIREMENTS

Effective Length of Span

Span length shall be taken as the distance between centers of bearings or other points of support.

Dead Load Camber

Steel structures should be cambered during fabrication to compensate for dead load deflection and for vertical alignment. When the girders are not provided falsework or other effective intermediate support during the placing of the concrete slab, the deflection due to the weight of the slab and other permanent dead loads added before the concrete has attained 75 percent of its required 28-day strength shall be computed on the basis of non-composite action.

Minimum Thickness of Steel

Structural steel, including bracing, cross-frames and all types of gusset plates, except for webs of rolled shapes, closed ribs in orthotropic decks, fillers and in railings, shall be not less than 5/16 inch in thickness. The web thickness of rolled beams or channels and of closed ribs in orthotropic decks shall not be less than 3/16 inch. The preferred maximum thickness of tension flanges thicker than 2 inches shall be normalized.

Diaphragms and Cross-Frames

Rolled beam and plate girder shall be provided with cross-frames or diaphragms at each support and with intermediate cross-frames or diaphragms placed in all bays and spaced at intervals not to exceed 25 feet. Other design criteria for diaphragm and cross-frames shall conform to AASHTO, Article 10.20.1.

Lateral Bracing

The need for lateral bracing shall be investigated for all stages of assumed construction procedures and the final condition. Flanges attached to concrete decks or other decks of comparable rigidity will not require lateral bracing. The application of wind force and placement criteria for the design of the lateral bracing shall conform to AASHTO, Article 10.21.

TENSION MEMBERS

Members and splices are subjected to axial tension such as rolled sections (angles, Tees and channels). Fracture and fatigue shall be investigated for designing the tension members.

For tension members and splice material, the gross section shall used unless the net section area is less than 85 percent of the corresponding gross area, in which case that amount removed in excess of 15 percent shall be deducted from the gross area. For calculating the net section, the provision of AASHTO, Article 10.16.14 shall apply.

In no case shall the design tensile stress on the net section exceed 0.50 Fu when using service load design method.

For M 270 Grades 100/100W steels, the design tensile stress on net section shall not exceed 0.46 Fu when using service load design method.

The stability of a component of a tension member, such as flange subjected to a net compressive stress due to the tension and flexure shall be investigated for local buckling.

Tension members other than rods, eyebars, cables and plates shall satisfy the slenderness requirements specified herein:

- For main members subject to stress reversals, $l/r \leq 140$.
- For main members not subject to stress reversals, $l/r \leq 200$.
- For bracing members, $l/r \leq 240$.

COMPRESSION MEMBERS

Prismatic non-composite and composite steel members with at least one plane of symmetry and subjected to either axial compression or combined axial compression and flexure about an axis of symmetry.

Compression members such as columns and chords subjected to either only axial compression or combined axial compression and flexure shall have ends in close contact at riveted and bolted splices. For compression members, the slenderness ratio, KL/r, shall not exceed 120 for main members, or those in which the major stresses result from dead or live load, or both; and shall not exceed 140 for secondary member, or those whose primary purpose is to brace the structure against lateral or longitudinal force, or to brace or reduce the unbraced length of other members, main or secondary. Considering the buckling effect due to different end support conditions, the maximum capacity for these compression members shall be calculated according to AASHTO, Article 10.54.

STIFFENERS

Transverse intermediate stiffeners shall consist of plates or angles welded or bolted to either on or both sides of the web. Stiffeners not used as connection plates shall be a tight fit at the compression flange, but need not be in bearing with the tension flange. The placement design criteria and the detailing requirement for the transverse intermediate stiffeners shall conform to AASHTO, Article 10.34.4.

Bearing stiffeners shall be provided to stiffen the webs of rolled beams at bearings when the unit shear in the web adjacent to bearing exceeds 75 percent of the allowable shear for the girder webs. Bearing stiffeners shall be required over the end bearings of welded plate girders and over the intermediate bearings of continuous welded plate girders to resist the bearing reactions and other concentrated loads, either in the final state or during

construction. The design criteria for bearing stiffeners shall conform to AASHTO, Article 10.34.6.
Where required for welded plated girders, longitudinal stiffeners (either a plate or a bolted angle) shall be furnished and welded longitudinally to one side of the web, and shall be located a distance of 2Dc/5 from the inner surface of the compression flange, where Dc is the depth of web in compression. The above-specified location was both theoretically and experimentally proved that can effectively control lateral web deflections under flexure. Other design criteria for longitudinal stiffeners shall conform to AASHTO, Article 10.34.3.

Intermediate stiffeners shall be placed only on the inside face of the exterior girders. For details of intermediate and bearing stiffeners, see Figure 1 - Stiffener Plate Details.

CONNECTIONS

Bolted and welded connections are generally applied to steel construction. Connections for main members shall be designed in the case of service load design for a capacity based on not less than the average of the calculated design stress in the member at the point of connection and the allowable stress of the member at the point but, in any event, not less than 75 percent of the allowable stress in the member.

Bolts, nuts and washers are the main connecting elements for bolted connections. Determining the type of connections for the detail in order to provide the proper design the connection is essential. The design criteria for bolts shall conform to AASHTO, Article 10.24.

All bolted connections shall be made high tensile strength bolts, nuts and washers conforming to ASTM A325 and shall be galvanized in accordance with the requirement of ASTM A153.

Direct Tension Indicators is used in conjunction with bolts, nuts, and washers specified Article 11.3.2.1. Such load indicating devices shall conform to the requirements of ASTM Specification for Compressible-Washer Type Direct Tension Indicators For Use with Structural Fasteners, ASTM F 959.

Welds are the only connecting element for welded connections. Base metal, weld metal, and welding design details shall conform to the requirements of the ANSI/AASHTO/AWS Bridge Welding Code D1.5. Welding symbols shall conform to the latest edition of the American Welding Society Publication AWS A2.4. Fabrication shall conform to AASHTO, Article 11.4 – Division II. Effective size of fillet welds shall conform to AASHTO, Article 10.23.2.

FIGURE 1
STIFFENER PLATE DETAILS.

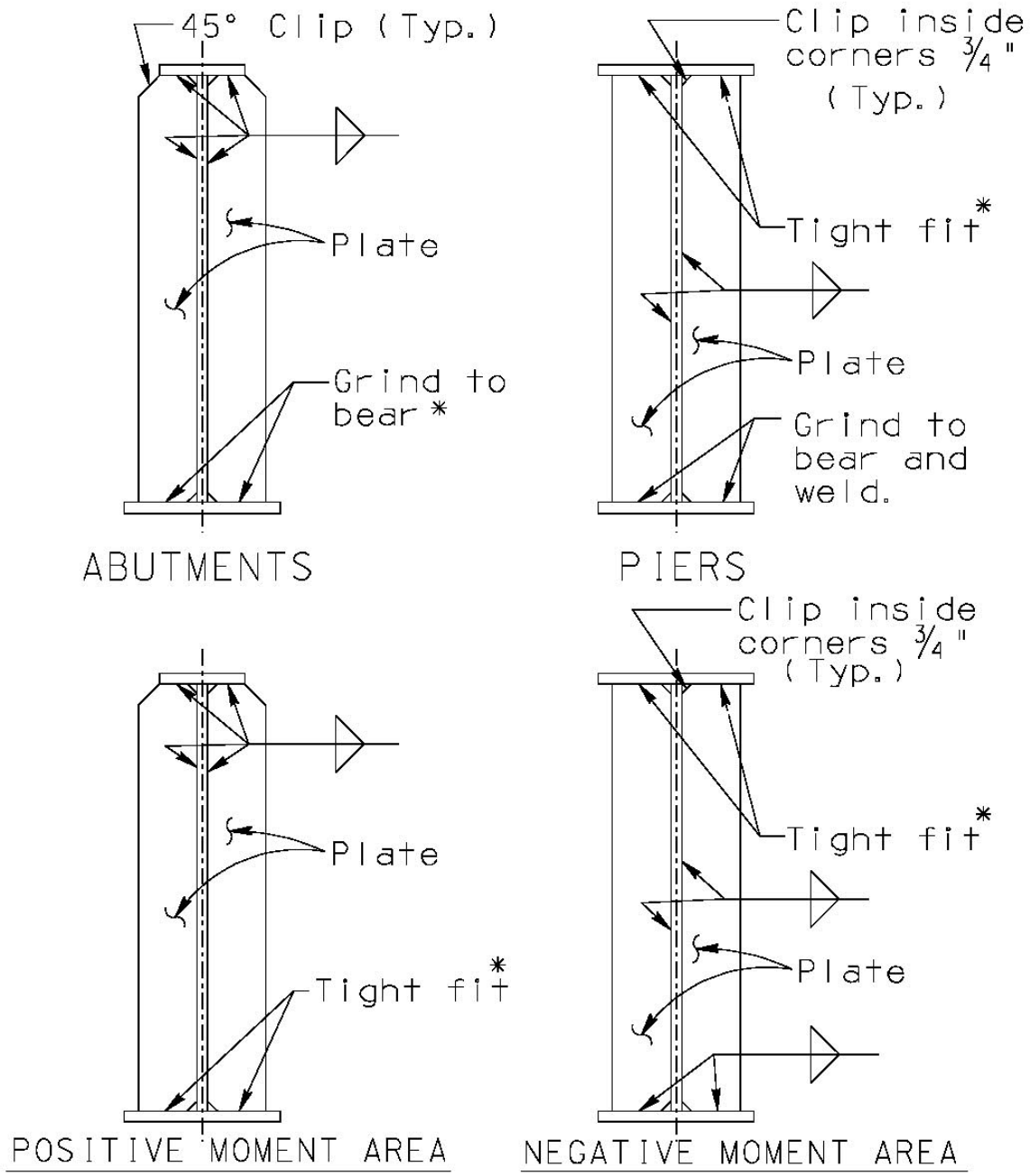

*Note additional requirements of AASHTO 10.20.1 "Vertical connection plates such as transverse stiffeners which connect diaphragms or cross frames to the beam or girder shall be rigidly connected to both top and bottom flanges."

SPLICES

Bolted and welded splices are generally used in steel beams, girders and columns. High-strength bolts shall be used for bolted splices. Where a section changes at a splice, the smaller of the two connected sections shall be used in the design and a fillers may be used in the splice detail. Splices for tension and flexural members shall be designed using slip-critical connections. For tension members and splice material, the gross section shall be used unless the net section area is less than 85 percent of the corresponding gross area, in which case that amount removed in excess of 15 percent shall be deducted from the gross section.

Splices of compression members such as columns and chords which will be fabricated and erected with close inspection and detailed with milled ends in full contact bearing at the splices may be held in place by means of splice plates and high-strength bolts proportioned for not less than 50 percent of the lower allowable design stress of the section spliced. Other bolted splice design criteria shall conform to AASHTO, Article 10.18.1 to 10.18.4.

Welded splices design and details shall conform to the requirements of the ANSI/AASHTO/AWS Bridge Welding Code D1.5 latest edition and AASHTO, Article 10.18.5.

Arizona Department of Transportation
Bridge Group

BRIDGE PRACTICE GUIDELINES

SECTION 9- DECKS & DECK SYSTEMS

Chapter	Page	Issue Date
SCOPE	2	11/1/99
DEFINITIONS	2	11/1/99
NOTATIONS	3	11/1/99
GENERAL DESIGN REQUIREMENTS	3	11/1/99
Interface Action	3	11/1/99
Concrete Appurtenances	4	11/1/99
Edge Supports	4	11/1/99
Stay-in-Place Formwork for Overhangs	4	11/1/99
CONCRETE DECK SLABS	4	11/1/99
General	4	11/1/99
Materials	5	11/1/99
Effective Span Length	5	11/1/99
Transverse Truss Bars	5	11/1/99
Traditional Slab Design	6	11/1/99
Slab Thickness	6	11/17/03
Protection Against Corrosion	6	5/15/02
Skewed Decks	6	11/1/99
Distribution Method	7	11/1/99
Deck with Stay-in-Place Formwork	7	11/1/99
General	7	11/1/99
Steel Formwork	7	11/1/99
Precast Concrete Deck Panels	8	11/1/99

SCOPE

This section contains guidelines to supplement provisions of Sections 3 and 8 of the AASHTO Specifications for the analysis and design of bridge decks and deck systems of reinforced concrete, prestressed concrete, metal, or various combinations subjected to gravity loads.

Implicit in this section is a design philosophy that prefers jointless, continuous bridge decks and deck systems to improve the weather and corrosion-resisting effects of the whole bridge, reduce inspection efforts and maintenance costs, and increase structural effectiveness and redundancy.

DEFINITIONS

Appurtenances - Curbs, parapets, railings, barriers, dividers, and sign and lighting posts attached to the deck.

Clear Span - The face-to-face distance between supporting components.

Composite Action - A condition in which two or more elements or components are made to act together by preventing relative movement at their interface.

Continuity - In decks, both structural continuity and the ability to prevent water penetration without the assistance of nonstructural elements.

Deck - A component, with or without wearing surface, that supports wheel loads directly and is supported by other components.

Deck System - A superstructure, in which the deck is integral with its supporting components, or in which the effects of deformation of supporting components on the behavior of the deck is significant.

Effective Span Length - The span length used in the empirical design of concrete slabs.

Floorbeam - The traditional name for a cross-beam.

Future Wearing Surface - An overlay of the structural deck to provide a smoother ride and/or to protect the structural deck against wear, road salts, and environmental effects. The overlay may include waterproofing.

Net Depth - The depth of concrete, excluding the wearing surface depth and the concrete placed in the corrugations of a metal formwork.

Shear Connector - A mechanical device that prevents relative movements both normal and parallel to an interface.

Skew Angle - The angle between the axis of support relative to a line normal to the longitudinal axis of the bridge. A zero degree skew denotes a rectangular bridge.

Spacing - Center-to-center distance of elements or components, such as reinforcing bars, girders, or bearings.

Stay-in-Place Formwork - Permanent metal or precast concrete forms that remain in place after construction is finished.

Structural Overlay - An overlay bonded to the deck that consists of concretes other than asphaltic concretes.

Wearing Surface - A sacrificial layer of the structural deck to protect the structural deck against wear, road salts, and environmental effects.

NOTATIONS

f'c = specified compressive strength of concrete at 28 days (psi).
f'ci = specified compressive strength of concrete at time of initial loading or prestressing; nominal concrete strength at time of application of tendon force.
fs = allowable stress in reinforcing steel (psi).
S = effective span length (ft).
t = minimum thickness of slab (in).
w = weight of deck slab (k/ft)

GENERAL DESIGN REQUIREMENTS

Interface Action

Decks shall be made composite with their supporting components, unless there are compelling reasons to the contrary.

Shear connectors and other connections between decks and their supporting members shall be designed for force effects calculated on the basis of full composite action.

Force affects between the deck and appurtenances or other components shall be accommodated. Structural effects of openings for drainage, utilities or other items shall be considered in the design of decks.

Concrete Appurtenances

When barriers are located at the deck edge, the deck shall be designed to resist both the axial force and the bending moments due to the dead load and the horizontal rail load, but not simultaneously with the vertical wheel load. Railings should be designed in accordance with the latest AASHTO LRFD Specification. Refer to Section 13.

Concrete barriers on continuous superstructures should have a 1/2" open joint filled with bituminous joint filler located over piers. The joint should extend to within 8 inches of the deck surface with reinforcing below this level made continuous.

Edge Supports

All free edges of the deck shall be properly analyzed and reinforced. Transverse edges at the expansion joints should be designed in accordance with the provisions of AASHTO 3.24.9. Longitudinal edge beams should be designed for all slabs having main reinforcing parallel to traffic in accordance with the provisions of AASHTO 3.24.8.

Stay-in-Place Formwork for Overhangs

Stay-in-place formwork shall not be used in the overhang of concrete decks.

CONCRETE DECK SLABS

General

Slabs shall be designed in accordance with the criteria specified in Section 3 of AASHTO Standard Specifications for Highway Bridges except as clarified or modified by these guidelines.

In accordance with the applicable provisions of AASHTO, the Service Load Design Method (Allowable Stress Design) shall be used for the design of all reinforced concrete decks. Prestressed concrete decks shall be designed by the Service Load Design Method and checked by the Strength Design Method (Load Factor Design).

MATERIALS

Concrete for bridge decks shall be ADOT Class 'S' with a minimum strength of f'c = 4500 psi for reinforced concrete and f'c = 5000 psi for prestressed concrete.

For normal weight concrete, the modulus of elasticity shall be assumed to be 57,000*sqrt(f'c).

Concrete shall be reinforced only with deformed bars conforming to ASTM A615/A615M-96a, except for welded wire reinforcing used in precast concrete deck panels. All reinforcing bars shall be supplied as Grade 60. All transverse deck reinforcing (main reinforcing perpendicular to traffic) shall be designed using an allowable stress fs = 20 ksi. All other reinforcing bars shall be designed using an allowable stress fs = 24 ksi.

EFFECTIVE SPAN LENGTH

The effective span length, S, for deck slabs for AASHTO Type V and VI regular and modified girders shall be the clear span between the top flange edges plus 17 inches. For other AASHTO girders, the effective span length shall be the clear span between the top flanges.

The interior span deck dead load moments may be determined using w*S*S/10.

TRANSVERSE TRUSS BARS

When reinforcing in the deck is to be epoxy coated, straight transverse bars top and bottom shall be used in lieu of the truss bars. When reinforcing in the deck is not epoxy coated, transverse truss bars shall be used whenever practical with possible exceptions for flared girders, short span bridges with a large skew and some bridge widening projects.

Truss bars should preferably be #5 bars but may be #6 bars. To maintain minimum bend radii, the minimum allowable out-to-out dimension for #6 truss bars shall be 5 inches. This will limit the usage of #6 truss bars to deck slabs 8.5 inches or greater. Splices may occur in the positive or negative areas but the minimum length splice for truss bars shall be 3'-0. Bends in the truss bars shall be at least 45 degrees with the positive moment section equal to one-half the effective design span S. Truss bars should not extend over more than 4 girders. When possible, a top longitudinal bar should be placed inside the top bend of the truss bars to provide stability during construction.

Traditional Slab Design

SLAB THICKNESS (AASHTO 8.11.1)

The thickness of new deck slabs shall be designed in 1/2 inch increments with the minimum thickness as shown below.

S (ft)	Up to 7.13	7.14 - 8.60	8.61 -10.09	10.10 -11.59	11.60 - 13.08
t (in)	8.00	8.50	9.00	9.50	10.00

Where S = Effective design span as defined in AASHTO 3.24.1 and as modified by these guidelines.
t = Minimum thickness of deck slab.

PROTECTION AGAINST CORROSION (AASHTO 8.22.1)

The minimum clearance shall be 2.5 inches for the top reinforcing in new decks and 1 inch for the bottom layer.

The minimum specified concrete strength (f'c) shall be 4500 psi.

For bridges located above an elevation of 4000 feet, or for areas where de-icing chemicals are used, a deck protection system shall be considered. Epoxy coated rebar for all deck, barrier and approach slab reinforcing as well as tops of girder stirrups is the recommended system. A latex modified or silica-fume concrete overlay or a membrane system with a bonded wearing surface are possible alternate protection systems. Selection of system and details to be used should be coordinated with Bridge Management Section during the preliminary design phase.

SKEWED DECKS

For a skew less than or equal to 20 degrees, the transverse bars shall be placed parallel to the skew and the effect of the skew considered in the design. For skews greater than 20 degrees, the transverse bars shall be placed normal to the girders and straight bars top and bottom shall be used in lieu of the truss bars in the triangular portion of the deck.

DISTRIBUTION METHOD

Use the method described in AASHTO Article 3.24.2 for load distribution on slabs except for unusual loads or unusual structures such as single cell box girder bridges.

Deck with Stay-in-Place Formwork

GENERAL

Most bridge decks are constructed using cast-in-place concrete supported by conventional timber formwork. Some bridge types and site conditions may warrant consideration of using stay-in-place formwork. Stay-in-place formwork systems consist of two types: precast concrete deck panels or steel stay-in-place forms. Use of a stay-in-place forming system may provide greater safety to the workers and the traveling public and may reduce the time required to construct the deck.

The designer should carefully study each site and determine if stay-in-place formwork systems should be used. A discussion of this issue should be included in the Bridge Selection Report. Use of a stay-in-place formwork system should be considered for the following situations:

1) When bridges span high traffic volume roadways, deep canyons or live streams,
2) Where removal of conventional formwork would be difficult or hazardous,
3) When use of a stay-in-place system for long bridges with simple geometry could save time and/or money,
4) Where time is a critical element of the project.

Depending on the site, the designer may propose the use of conventional formwork or require use of a stay-in-place system. When a stay-in-place formwork system is selected, the contract documents should include the design for the stay-in-place formwork system. The contractor should not be required to design deck options.

STEEL FORMWORK

Steel stay-in-place formwork consists of corrugated metal forms placed to span transversely between girders. These forms are designed to carry the weight of fresh concrete (160 pcf) and construction live loads of 50 pcf at the time of the deck concrete placement. Once the deck has cured, the deck is designed to carry its self dead load, any future wearing surface and live load plus impact, the same as a conventionally formed deck. The major difference comes from the added weight of the steel forms and extra concrete required by this system. Steel stay-in-place formwork has the advantage of providing for a continuously reinforced deck without any cold joints or openings between panels as with precast concrete formwork. Steel formwork is relatively lightweight for transporting and placing.

Steel formwork shall not be considered to be composite with a concrete slab. For decks made with corrugated metal formwork, the design depth of the slab shall be assumed to be the minimum concrete depth. The drawings should clearly state the amount of extra

weight the deck, girder and substructure has been designed for due to this method of construction. Typical forming systems will add 10 to 12 pounds per square foot of deck area between girder flanges. Only systems which limit the weight within the stated limitation will be allowed without a complete analysis supplied by the contractor's engineer. The steel deck forms shall be galvanized for corrosion protection. Also a method of supporting the forms which allows for a varying build-up shall be shown. Comparable alternate details for this support system will be allowed. Details for this system must be submitted, reviewed and approved with the girder shop drawings to ensure compatibility.

Steel formwork is the preferred stay-in-place formwork for bridge deck construction.

PRECAST CONCRETE DECK PANELS

Precast concrete deck panels are used with a cast-in-place concrete topping to create a final composite deck. The panels are precast off site, trucked to the site, and lifted into place. The panels are designed to span transversely between the girders. The precast panels supply the positive moment resistance while the reinforced cast-in-place topping resists the negative moments.

Precast concrete deck panels are not recommended for stay-in-place formwork because of the complexity of design parameters such as:

1. Transfer and development lengths
2. Correct location of strands or reinforcing
3. Difficulty in providing for girder camber and proper seating of the panels
4. Longitudinal discontinuity resulting in possible reflective cracking at the ends of each panel
5. Difficulty in ensuring composite action with the cast-in-place concrete
6. Combined shrinkage and creep effects

Precast prestressed concrete deck panels may be considered for major or unusual girder bridges. The panels shall be prestressed in the direction of the design span. Epoxy-coated strands shall not be used which necessarily precludes the use of the panels for bridges above 5,000 foot elevation. Prestressing strands need not be extended into the cast-in-place concrete above the girders. The depth of the deck panels should neither exceed 55 percent of the total depth of the finished deck slab nor be less than 3.5 inches.

A full discussion justifying the proposed use of precast prestressed concrete deck panels, including all design and construction parameters, must be presented with the Bridge Selection Report before final approval can be considered.

Arizona Department of Transportation
Bridge Group

BRIDGE PRACTICE GUIDELINES

SECTION 10- FOUNDATIONS AND SUBSTRUCTURES

Chapter	Page	Issue Date
SCOPE	3	7/2/01
DEFINITIONS	3	7/2/01
FOUNDATION	4	7/2/01
Drilled Shaft	4	7/2/01
General	4	7/2/01
Drilled Shaft Types	4	7/2/01
Design Considerations	5	7/2/01
Construction	6	7/2/01
Settlement Tolerances	9	7/2/01
Safety Factors	9	7/2/01
Spread Footing	10	7/2/01
General	10	7/2/01
Types of Spread Footing	10	7/2/01
Settlement Tolerances	10	7/2/01
Safety Factors	11	7/2/01
Construction	11	7/2/01
Piles	11	7/2/01
General	11	7/2/01
Types of Piles	11	7/2/01
Settlement Tolerances	12	7/2/01
Safety Factors	12	7/2/01
Construction	12	7/2/01
Geotechnical Relationship	13	7/2/01
Determination of Soil Properties	14	7/2/01

Bridge Geotechnical Reports	**14**	**7/2/01**
Design Kick-off Meeting & Stage I Design	**14**	**7/2/01**
Stage II Design	**15**	**7/2/01**
Stage III Design	**15**	**7/2/01**
SUBSTRUCTURE	**16**	**7/2/01**
Abutment	**16**	**7/2/01**
General Consideration	**16**	**7/2/01**
Pier	**18**	**7/2/01**
General Consideration	**18**	**7/2/01**
Pier Protection	**18**	**7/2/01**
APPROACHES	**18**	**8/20/01**
Approach Slab	**18**	**8/20/01**
Anchor Slab	**19**	**8/20/01**

SCOPE

The main purpose of this section is to document ADOT Bridge Group design criteria as related to bridge substructure and foundation geotechnical issues.

Bridge substructure is often referred to as the bridge components below the bearings of the superstructure. They consist of abutments, piers and their foundations. The function of the substructure is to support all the live and dead loads and earth and water pressure loading in accordance with the general principles specified in AASHTO Design Specifications. It can be reinforced concrete, steel or the combination of both. The design and detailing aspects for bridge substructure shall refer to Section 3, 4 and 5 of this guideline.

DEFINITIONS

Drilled Shaft	A deep foundation unit, wholly or partly embedded in the ground, constructed by placing fresh concrete in a drilled hole with or without steel reinforcement. Drilled shafts derive their capacity from the surrounding soil and/or from the soil or rock strata below its tip. Drilled shafts are also commonly referred to as caissons, drilled caissons, bored piles, or drilled piers.
Spread footing	A spread shallow foundation that derives its support by transferring load directly to the soil or rock at shallow depth.
Piles	A relatively slender deep foundation unit, wholly or partly embedded in the ground, that is installed by driving, drilling, auguring, jetting, or otherwise and that derives its capacity from the surrounding soil and/or from the soil or rock strata below its tip.
Abutment	A structure that supports the end of a bridge span and provides lateral support for fill material on which the roadway rests immediately adjacent to the bridge.
Pier	That part of a bridge structure between the superstructure and the connection with the foundation.

FOUNDATION

Drilled Shaft

GENERAL

A drilled shaft foundation consists of excavating a round hole by machine, placing a reinforcing cage in the hole and filling the hole with concrete. All drilled shafts shall be constructed vertically. Battered drilled shafts are not allowed. The geotechnical engineer is responsible for recommending the minimum diameter of shaft recommended and providing the necessary information for determining the minimum required embedment below a specified elevation to develop the required axial load. He is also responsible for determining the soil properties in each layer to be used in analyzing lateral loads and whether slurry methods of construction may required. If necessary, methods of testing the shaft after concreting will be specified in the Bridge Geotechnical Report.

DRILLED SHAFT TYPES

Four types of drilled shafts are currently used at ADOT and are listed as:

Prismatic Drilled Shaft	Drilled shaft has constant diameter throughout its entire length.
Rock Socket	Refers to the lower portion or the entire length of the drilled shaft embedded into the rock strata which requires special heavy duty drilling equipment. The rock socket is normally six inches smaller in diameter than the regular drilled shaft portion. The minimum embedment of rock socket shall be ten feet. Separate pay item shall be set up because of added cost of rock drilling.
Bellied Shaft	A drilled shaft with the flared bell shape at the tip so that the drilled shaft bearing area is increased. Generally it has the advantage when stiff foundation material is encountered and results in higher bearing capacity so that the drilled shaft length can be reduced.
Telescoping Shaft	A drilled shaft with one or more segments of consecutively smaller diameters. In order to avoid using excessive steel casing for shoring purpose during drilled shaft construction when very loose foundation material is present, telescoping augering technique can be beneficial to accommodate varying soil conditions.

DESIGN CONSIDERATIONS

The bridge designer is responsible for ensuring that the allowable axial capacity is not exceeded for any AASHTO group Loading and that the shaft can withstand the applied lateral loads.

Unless specified otherwise in the Bridge Geotechnical Report, the following criteria should be used in designing drilled shaft foundations:

- Drilled shafts shall be spaced a minimum of three diameters measured center to center of the shafts.
- The length of a shaft should be limited to 20 times its diameter.
- Shafts, which will remain open in the dry, should have 3 inches minimum clear cover to the outside edge of the shaft.
- Shafts, which may be constructed using slurry, should be designed to have 6 inches minimum clear.
- Vertical reinforcing should be detailed to provide the minimum recommended clearance in AASHTO Article 4.6.6.2.1. In no case shall the clearance between vertical reinforcing be less than 4 1/2 inches.
- Horizontal ties should be spaced at 6 inches minimum.
- The footing shall be sized to extend a minimum of 9 inches from the edge of a shaft.
- A 2-1/2 inch Schedule 80 or a 2 inch Schedule 40 PVC pipe for gamma-gamma logging shall be installed inside the drilled shaft if wet excavation is anticipated for the drilling.
- If collapsing material or intermittent large boulders are found during the geotechnical investigation, a test shaft boring may be performed as part of the investigation and the results included with the final bridge foundation report. Test shaft borings should only be used when there is legitimate uncertainty regarding the suitability of this foundation option. In most cases, the geotechnical engineer and the bridge designer should be able to make the determination based on new and historic site data without the need for the costly test shaft boring.
- Rock sockets may be appropriate where the depth to bedrock is too short for adequate development length of the reinforcing but too deep for economical spread footings.

CONSTRUCTION

Drilled shaft construction specifications shall refer to Section 609, Drilled Shaft Foundation in ADOT Standard Specifications for Road and Bridge Construction, 2000 Edition.

A drilled shaft is a type of deep foundation which transmits loads from a structure to the soil. Deep foundations are required when the upper soil layers are weak, the effects of the mining, degradation and scour must be considered in design and when there are construction constraints which might otherwise require shoring. The method of construction consist of drilling a hole in the ground, placing a reinforcing cage in the hole and pouring concrete into the hole.

Based on how drilled shafts transmit their axial loads to the soil, they can be categorized into three types: Skin Friction, End Bearing and Combination. The type of shaft is important in that it can influence the type and amount of inspection required. For example, an end bearing shaft requires better cleanout of the bottom of a shaft than a friction shaft.

There are five basic methods to construct a drilled shaft: dry wet slurry, temporary casing or permanent casing. The method of construction is important since it can affect the load carrying capacity of a shaft. For example, permanent casing will affect the capacity of the soil to resist loads for skin friction shafts.

The first use of drilled shafts as deep bridge foundations in Arizona occurred in 1980 on the SR87 Bridge over the Salt River. The need to design for the effects of mining and deep scour and the need to have a foundation type which would penetrate through the sand, gravel and cobble layer, led to the use of drilled shafts. Due to ADOT's lack of experience in this type of construction the specifications required the contractor to prove he could construct a shaft through the sand, gravel and cobble layer using slurry by requiring a test shaft. The contractor constructed a shaft and exposed it for our field personnel to inspect. The shaft was unacceptable. After a few more attempts, the contractor was able to construct a successful shaft.

From this early beginning ADOT gradually developed extensive guidelines for in-depth method specifications which attempted to cover all conditions. This practice required close supervision by our inspectors and trained inspection staff. Extensive boring programs and geotechnical reports were developed for each site.

This worked for a while, as most shafts were constructed in the well-known deposits of the Salt River. Over time many conditions changed drastically from ADOT's initial development of our method based specifications. Drilled shafts became the deep foundation of choice being used statewide. This meant that each site had different and varying geological conditions. More drilling contractors entered our market as our usage increased. These drillers possessed varying levels of expertise. The knowledge

developed over the years and needed by our inspectors and resident engineers began to disappear as ADOT lost experienced in-house experts.
To solve these problems, a 12 member committee was assembled to update the specification. The committee consisted of members representing ADOT Bridge, Geotechnical and Construction Administration, contractors and drilling subcontractors. Their initial efforts resulted in attempting to further refine the old method specifications by dictating the material, equipment and procedures that the contractor should use and even going so far as to require prequalification of drillers.

Finally attempts to patch the method based specifications to cover every situation crumbled and a different direction was taken. Using the concepts of Total Quality Management, a new performance based specification was developed based on the Division II Section 5 AASHTO Specifications and the philosophy of partnering.

Major features of the new specification included the elimination of dictating the type and minimum size of equipment to be used, the experience requirements of the drillers and the need to prequalify the drillers. In its place were added the requirements for an installation plan, a method to evaluate the plan and a method to verify the plan with a confirmation shaft.

The specification requires the contractor to submit a detailed installation plan to the Engineer for approval. Major items to be discussed include:

- List of proposed equipment including cranes, drills, augers, buckets, cleaning equipment, pumps casing, and any other equipment to be used. This is a major change from the past where the designers would specify the minimum size of the drilled rigs. This not only allows the contractor the opportunity to choose his own equipment but also puts the responsibility back on the contractor for selecting the proper equipment.

- Details of overall construction operation sequence and the sequence of shaft construction in bents or groups. This is where the contractor will explain his sequence of construction as related to sequence of fills and drilled shafts. Also if the shafts must be constructed in a specific sequence to avoid disturbance to closed-by shafts, the contractor would specify his exact sequence.

- Details of shaft excavation methods, including equipment and procedures for checking the dimensions and alignment of each shaft excavation. This is important so our inspectors and the driller will have a clear understanding of who will take the measurements and how they will be taken.

- When slurry is required, details of the method proposed to mix, circulate, desand and even dispose of the slurry must specified. The slurry method is the most

difficult and expensive method to construct a shaft and requires a well-planned effort.

- Details of methods to clean the shaft excavation. This is essential for end bearing and combination shafts where the capacity depends on having a clean bottom to transmit the loads from the shaft to the soil.

- Details of reinforcement placement including support and centralization methods. This involves an element of partnering in that the contractor is provided and an opportunity to modify reinforcing details for better constructibility and receive designer review and approval. The centralizer should be identified and approved up front so there are no surprises in the field.

- Details of concrete placement including the method of pour. The contractor should identify whether the concrete will be placed by freefall, by pumping or by tremie.

- Details of casing dimensions, material and splice details, if required.

- Details of concrete mix designs and mitigation of possible loss of slump during placement. The loss of slump is very important for wet or slurry constructed shafts.

- List of work experience in previous similar projects. This is another major shift from our previous specification. Our old method specification sounded good but was difficult to enforce. Now we have an opportunity to question the experience level of the workers depending on the difficulty of the operation, but ultimately the responsibility of producing the product rests with the contractor.

- Emergency horizontal construction joint method if unforeseen work stoppage occurs. This is very important in any wet or slurry constructed shaft. It is much better to discuss how the problem will be solved before work begins than during a crisis situation. Usually contingency plans including backup pumps and concrete suppliers are sufficient to prevent the problem.

- Other information shown on the plans or requested by the Engineer.

The purpose of the installation plan is to facilitate communication and encourage planning among the involved parties including the contractor. driller, resident engineer, inspectors, geotechnical engineer and the bridge engineer.

The intent is to get the contractor and resident engineer to think ahead about what material, equipment and methods will be used to construct the drilled shafts. The outcome should be a well thought-out plan which demonstrates that the contractor is ready and capable to do the work. The purpose is to ensure that the contractor has prepared for the work, that proper coordination has occurred between the contractor and

his subcontractors and the responsibilities have been clearly established. A well thought-out plan will minimize the department's risk of dealing with defective shafts and will help to resolve issues ahead of time.

The second major feature of the new specification is the approval process. The resident engineer is responsible for reviewing and approving the installation plan. The geotechnical and bridge engineers for the project will assist the resident engineer in the review of the plan, with the major effort coming from the geotechnical engineer. The objective of the installation plan is not so much a verification tool for the department as it should be a planning tool for the contractor.

The third major feature of the new specification involves the verification process. The confirmation shaft is an opportunity to test the method and plan in the field under an actual production situation. The confirmation shaft is NOT a test shaft. The purpose of the confirmation shaft is to confirm that the method of construction works. The requirements for a confirmation shaft also provides the geotechnical engineer an opportunity to be on site to identify the soil type, ensuring that the soil is the same as was assumed in design, that the construction method will result in the required capacity, and that the inspectors are properly trained to monitor the work.

Most problems with drilled shaft construction are the result of poor communication and planning. This specification is no magic wand which will eliminate changed conditions or even construction problems. This specification does establish a formal method for the contractor and ADOT to plan their work and to encourage communication and partnering to identify problems and arrive at quick solutions which should result in better construction.

SETTLEMENT TOLERANCES

The settlement of a drilled shaft foundation involving either single-drilled shafts and groups of drilled shafts shall not exceed the movement criteria which are developed to be consistent with the function and type of structure, anticipated service life, and consequences of unacceptable movements on structure performance. The tolerable movement criteria shall be established by either empirical procedures or structural analyses or by consideration of both. Drilled shaft displacement analyses shall be based on the results of in-situ and/or laboratory testing to characterize the load deformation behavior of the foundation materials. Refer to Art. 4.6.5.5.3 and Art. 4.6.5.6.2 for additional guidance regarding tolerable vertical and horizontal movement criteria.

SAFETY FACTORS

Drilled shafts in soil or socketed in rock shall be designed for a minimum factor of safety of 2.0 against bearing capacity failure when the design is based on the results of a load test conducted at the site. Otherwise, shafts shall be designed for a minimum factor of safety 2.5. The minimum recommended factors of safety are on an assumed normal level of field quality control that cannot be assured, higher minimum factors of safety shall be used.

Spread Footing

GENERAL

When good soil materials exist near the surface, shallow foundations in the form of spread footings will normally be the recommended foundation types. For foundation units situated in a stream, spread footings shall only be used when they can be placed on non-erodible rock. Spread footings are normally not placed on embankment material.

When spread footings are the recommended foundation type, the Bridge Geotechnical Report shall contain the allowable bearing pressure, the minimum elevation of the bottom of the footings and the estimated total settlement, differential settlement and the time rate of settlement, if applicable.

The bridge designer shall size the footing to ensure that the allowable bearing pressure is not exceeded for any AASHTO Group Loading and that the footing is properly sized and reinforced to resist the maximum applied moments and shears. The bottom elevations of spread footings shall be set at least to the recommended depth. The minimum top cover over the top footings shall be 1'-6. For footings located at elevations over 5000 feet, the minimum depth of embedment to the bottom of footings shall be 6'-0 to prevent frost heave unless otherwise recommended in the Geotechnical Report. If the possibility for differential settlement is identified, the bridge designer shall ensure that the entire structure is capable of structurally resisting the forces induced by the differential settlement.

TYPES OF SPREAD FOOTING

Two types spread footings are most commonly used:

Isolated Footing	Individual support for the various parts of a substructure unit which may be stepped laterally.
Combined Footing	A footing that supports more than one column for multi-column bents.

SETTLEMENT TOLERANCES

The total settlement includes elastic, consolidation, and secondary components and may be determined by the empirical formula in Art. 4.4.7.2. The tolerable movement criteria (vertical and horizontal) for footings shall be developed consistent with the function and type of structure, anticipated service life, and consequences of unacceptable movements on structure performance. Foundation displacement analyses should be conducted to determine the relationship between estimated settlement and footing bearing pressure to optimize footing size with respect to supported loads by using the results of in-situ and /or laboratory testing to characterize the load-deformation behavior of the foundation soil. The bridge designer shall incorporate the estimated footing settlement value recommended by the geotechnical engineer into the footing design. The tolerable movement criteria for footing foundation settlement shall be as specified in Art. 4.4.7.2.5.

SAFETY FACTORS

Spread footings in solid non-erodable rock shall be designed for Group I loading using a minimum factor of safety of 3.0 against a bearing capacity failure.

CONSTRUCTION

The project geotechnical engineer shall verify each spread footing excavation prior to placement of reinforcement and concrete.

Piles

GENERAL

When good foundation material is not located near the surface, when settlement is a problem, where dimensional constraints exist, or for foundation units located in streams where scour is a problem, deep foundations will usually be recommended. One type of deep foundation is a driven pile. Driven piles may be either steel H piles, steel pipe piles or prestressed concrete piles.

The geotechnical engineer is responsible for recommending when driven piles can be considered, the type of driven pile to be used, the allowable capacity of the pile, the estimated pile tip elevation and any special requirements necessary to drive the piles. When steel piles are used, the corrosive life of the pile will be reported in the Geotechnical Report. The geotechnical engineer is also responsible for running the WEAP87 wave equation computer program to determine the driveability of the specified piles and to develop charts or other guidelines to be used by construction personnel to control the pile driving process.

The bridge designer is responsible for ensuring that the allowable axial capacity is not exceeded for any AASHTO group Loading and that the pile or pile group can withstand the applied lateral loads.

TYPES OF PILES

Batter Pile	Pile driven at an angle inclined to the vertical to provide higher resistance to lateral loads.
Friction Pile	A pile whose support capacity is derived principally from soil resistance mobilized along the side of the embedded pile.
Point Bearing Pile	A pile whose support capacity is derived principally from the resistance of the foundation material on which the piles tip rests.
Combination Point Bearing and Friction Pile	Pile that derived its capacity from contributions of both point bearing developed at the pile tip and resistance mobilized along the embedded shaft.

Two types of piles most commonly used by ADOT are:

Pipe Pile 14 and 16 inch diameter steel pipes with 1/2 or 5/8 inch wall thickness are generally recommended for the shell. Shell will be driven or vibrated down into the soil until the designed bearing is reached. Steel reinforcing cage will be placed inside the shell prior to concrete placement. It generally serves as a point bearing pile and the shell is not considered as part of the structural element.

Steel H-Pile ASTM A-36 HP shape will be used. It generally serves as friction pile.

SETTLEMENT TOLERANCES

For purpose of calculating the settlements of pile group, loads shall be assumed to act on an equivalent footing located at two-thirds of the depth of embedment of the piles into the layer that provides support. Elastic analysis, load transfer and /or finite element techniques may be used to estimate the settlement of axially loaded piles and pile groups at the allowable loads. The design of laterally loaded piles shall account for the effects of soil/rock-structure interaction between the pile and the ground. The settlement of the pile or pile group shall not exceed the tolerable movement limits of the structure. Refer to Art. 4.5.6.7 and Art. 4.5.12 for additional guidance regarding tolerable vertical and horizontal movement criteria.

SAFETY FACTORS

The selection of the factor of safety to be applied to the ultimate axial geotechnical capacity shall consider the reliability of the ultimate soil capacity determination and pile installation control. Recommended values for the factor of safety depending upon the degree of construction control specified on the plans are presented in the table of Art. 4.5.6.4.

CONSTRUCTION

Steel Pile Driving equipment, including the pile driving hammer, hammer cushion, drive head, pile cushion and other appurtenances to be furnished by the Contractor that damages the piling shall not be used and shall be approved in advance by the Engineer before any driving can take place.

Whenever the bearing capacity of piles is specified to be determined by Method B, “Wave Equation Analysis,” the Contractor shall also submit calculations, based on a wave equation analysis, demonstrating that the poles can be driven with reasonable effort to the ordered lengths without damage.

Piles shall be driven to the minimum tip elevations and bearing capacity shown on the plans, specified in the special provisions or approved by the Engineer. Piles that heave more than ¼ inch upward during the driving of adjacent piles shall be redriven.

Test piles and piles for static load tests, when shown on the plans, shall be

furnished to the lengths to the lengths ordered and driven at the locations and to the elevations directed by the Engineer before other piles in the area represented by the test are ordered or driven. All test piles shall be driven with impact hammers unless specifically stated otherwise in the special provisions or on the plans.

Pipe Pile Steel shells for cast-in-place concrete piles shall be of not less than the thickness shown on the plans. The Contractor shall furnish shells of greater thickness if necessary to provide sufficient strength and rigidity to permit driving with the equipment selected for use without damage, and to prevent distortion caused by soil pressures or the driving of adjacent piles. The shells shall also be watertight to exclude water during the placing of concrete.

No concrete shall be placed until all driving within a radius of 15 feet of the pile has been completed, or all driving within the above limits shall be discontinued until the concrete in the last pile cast has set at least 5 days.

Geotechnical Relationship

Since problems requiring geotechnical and structural expertise often result to confusion concerning the responsibilities of each, another purpose of this section is to define the role of the geotechnical engineer and the bridge engineer in design problems involving both fields.

The usual procedure for designing bridge foundation substructure units is as follows:

The bridge designer will develop an Initial Bridge Study and a preliminary location plan.

The geotechnical engineer will conduct a site investigation, identify hole locations according to the Initial Bridge Study and the preliminary location plan, drill and log borings, perform soil testing as appropriate, plot the boring logs and summarize the results in a Preliminary Geotechnical Report. The Report will include preliminary foundation recommendation which identifies the type of foundation recommended for each substructure unit including the allowable loads and required depths so that the bridge engineer can use this information for developing the Preliminary Bridge Selection Report and the Stage III bridge drawings. Additional final borings may be performed if necessary when final design indicates preliminary boring depth is insufficient to determine the additional foundation depth. Test shafts may also will be performed if necessary during this stage in order to provide detail drilling information to the contractor. All the final boring information including the test shaft will be incorporated in the Final Geotechnical Report. The report will consist of the final foundation recommendation so that the bridge engineer will be able to complete the Bridge Selection Report and the Stage III bridge drawings.

The Geotechnical Engineer is responsible for preparing the boring logs for the construction drawings. He/she also prepares the necessary special provisions for construction of the foundation elements. During construction of the bridge foundations, the Geotechnical Engineer oversees geotechnical testing, spread footing excavations and piling and drilled shaft construction. He/she works closely with Bridge Designer to jointly resolve problems during construction or if redesign is needed because of changed site conditions.

The bridge designer is responsible for producing the structural design and construction documents for the substructure units as part of the bridge plans.

Determination of Soil Properties

The element of the subsurface exploration and testing programs shall be the responsibility of the geotechnical engineer who is either the representative from Geotechnical Design Section of Material Group, ADOT or from the contracted consulting engineer for the project, based on the specific requirements of the project and his or her experience with local geologic conditions. According to AASHTO Specifications, subsurface explorations shall be performed for each substructure element to provide the necessary information for the design and construction of foundations. The extent of exploration shall be based on subsurface conditions, structure type, and project requirements. The exploration program shall be extensive enough to reveal the nature and the types and engineering properties of soil strata or rock strata, the potential for liquefaction, and the groundwater conditions. The requirements for minimum exploration depth, coverage, laboratory testing and hydraulic studies for scour shall also be in conformance with the AASHTO Specifications.

Bridge Geotechnical Reports (Preliminary and Final)

DESIGN KICK-OFF MEETING & STAGE I DESIGN

- Request permit for geotechnical investigation
- Minimal Field Investigation (minimum two borings at each bridge, and Laboratory Testing
- Literature research for history, surface conditions, site geology, subsurface conditions, previous similar structures and foundation investigations for existing structure(s)
- Obtain Initial Bridge Study from Bridge Group. If Initial Bridge Report is not available then obtain a preliminary bridge location plan, foundation layout sheet, estimated axial loads, and preliminary design scour depth from bridge engineer.

STAGE II DESIGN

Beginning of Stage II:
Complete Preliminary Bridge Geotechnical Report for each bridge site which includes:

- Site investigation (regional/site geology, test borings and laboratory testing).
- Generalized soil/rock profiles giving initial surface elevations.
- Soil properties.
- Type of foundation options: Spread Footings, Driven Piles or Drilled Shafts (advantage or disadvantage).
- Request test shaft if needed, test shaft request should come after type and size of shaft and location is firmed up by the bridge engineer with consultation with the project geotechnical engineer. They should determine jointly.
- Analysis of the effects of scour, aggradation and/or degradation.

End of Stage II:
Complete Final Bridge Geotechnical Report for each bridge site which includes:

- Review and summarize currently available foundation data and determine whether additional borings are needed.
- Complete test shaft if necessary and document results with report.
- Recommended final foundation alternate including type, depth, allowable loads or bearing pressures, anticipated settlements, and the effects of scour.

STAGE III DESIGN

Prepare and complete Bridge Geotechnical Report for each bridge site with PE seal which includes:

- Introduction
- History
- Proposed Construction with copy of bridge general plan and foundation drawings
- Surface Conditions
- Site Geology

- Subsurface Conditions (prepare foundation data sheet)
- Channel and Hydraulics
- Foundation Recommendation
- Special Provisions
- Cost Estimate
- Discussion

SUBSTRUCTURE

A substructure is any structural, load –supporting component generally referred to by the terms abutment, pier, retaining wall, foundation or other similar terminology. Retaining wall will be discussed in Chapter 11.

Abutment

GENERAL CONSIDERATION

- Types of Abutment
  They can be support by different foundation types, such as spread footing, piles and drilled shafts.
  - Stub Abutment
  - Partial-Depth Abutment
  - Full-Depth Abutments
  - Integral Abutment
- Loading
  Abutments shall be designed to withstand dead load, erection loads, live loads on the roadway, wind loads on the superstructure, forces due to stream currents, floating ice and drift, temperature and shrinkage effects, lateral earth and water pressures, scour and collision and earthquake loadings.
- Loading Effect

Integral abutments shall be designed to resist and/or absorb creep, shrinkage, and thermal deformations of the superstructure.

For computing load effect in abutments, the weight of filling material directly over an inclined or stepped rear face, or over the base of a reinforced concrete spread footing may considered part of the effective weight of the abutment. Where spread footings are used, the rear projection shall be designed as a cantilever supported at the abutment stem and loaded with the full weight of the superimposed material, unless a more exact method is used.

The design of abutment wall should be similar to retaining wall for overturning, overall stability and sliding.

- Settlement
  The anticipated settlement of abutments should be estimated by appropriate analysis, and the effects of differential settlement shall be accounted for in the design of the superstructure.

- Expansion and Contraction Joints
  Consideration shall be given to measures that will accommodate the contraction and expansion of concrete wall.

- Drainage and Backfilling
  The filling material behind abutments shall be free draining, nonexpansive soil, and shall be drained by weep holes with French drains placed at suitable intervals and elevations. Silts and clays shall not be used for backfill. Backfill material shall be compacted to at least 95 percent of the maximum density as determined in accordance with the requirements of the applicable test methods of the ADOT Materials Testing Manual, as directed and approved by Engineer.

- Wingwalls and Cantilever Walls
  Wingwalls may be designed as monolithic with the abutments or as free standing, with an expansion joint separating them from abutment walls. The wingwall lengths shall be computed using the required roadway slopes. Wingwalls shall be of sufficient length to retain the roadway embankment and to furnish protection against erosion. If the wingwall is cantilever off the abutment wall, the cantilever action from the lateral earth pressure shall be taken horizontally from the point of attachment at the abutment.

Pier

GENERAL CONSIDERATION

- Types of Pier
  Piers shall be designed to transmit the loads on the superstructure and the loads on the pier itself to the foundation. The loads and load combinations shall be as specified in Chapter 3. The structural design of piers shall be in accordance with the provisions of Chapter 5, 6, 7, and 8, as appropriate.

  - Solid Wall Piers
  - Double Wall Piers
  - Bent Piers
  - Single-Column Piers

PIER PROTECTION

- Where the possibility of collision exists from highway or river traffic, an appropriate risk analysis should be made to determine the degree of impact resistance to be provided and/or the appropriate protection system.

- Collision walls extending six feet above top of rail are required between columns for railroad overpasses, and similar walls extending 2.35 feet above ground should be considered for grade separation structures unless other protection is provided.

- The scour potential must be determined and the design must be developed to minimize failure from this condition. Where appropriate, round column with adequate spacing (three times of diameter of drilled shaft) shall be considered to be hydraulically efficient and to be able to minimize the scour impact at the pier.

APPROACHES

Approach Slab

Bridge Group Structure Detail drawing SD 2.01 has been developed for approach slabs on all new bridges. The approach slab has been designed using the load factor design method according to the AASHTO Standard Specifications for Highway Bridges. The slabs have been designed to support an HS-20-44 live load, 25 psf future wearing surface and its own self weight. A design span equal to 13 feet has been used assuming

settlement may occur and the slab is only supported at the abutment seat and near the far end.

Approach slabs serve three major purposes:

1) They provide a smooth transition structure from the bridge to the approach roadway should the roadway embankment settle.

2) They eliminate the live load surcharge on the abutment backwall when the conditions specified in AASHTO 3.20.4 are satisfied.

3) They provide a structural foundation for bridge barriers or transitions.

Three approach slab options are provided.

Plan A is to be used for right angle bridges.

Plan B is to be used for bridges with skews less than or equal to 45 degrees. This option is not appropriate when used in conjunction with anchor slabs.

Plan C is to be used for bridges with skews greater than 45 degrees and less than or equal to 60 degrees; and for all skewed bridges where anchor slabs are also used.

The bridge drawings shall specify the length of the approach slab and which of the three plans is to be used. The SD drawings show the minimum length of the slabs as 15 feet. This length is adequate for most applications. Where the length needs to be increased to eliminate the need to design a surcharge for an abutment or when ground conditions indicate potential for possible large settlements or when bridge barrier transitions require a greater length, the length of the slab should be increased and the adequacy of the design verified. The bridge designer should consult with the project geotechnical engineer regarding all non-standard approach roadway applications. Inattention to detail in this area could result in serious damage and costly repairs.

The transverse reinforcing in the approach slab was increased to allow a barrier or transition to be supported on the slab. No additional reinforcing is required for this application.

Approach slabs are bid by the square foot; the price including all excavation, concrete, reinforcing steel, guard angles and joint material included in the approach slab and sleeper slab.

Anchor Slab

Bridge Group Structure Detail drawings SD 2.02 and SD 2.03 have been developed for use when anchor slabs are required. When approach roadways are paved with portland cement concrete pavement (PCCP) adequate means shall be provided to prevent pavement growth from causing damage to the bridge. Use of a properly designed anchor slab as shown in SD 2.02 and SD 2.03 is one means of providing such protection. Use of continuously reinforced concrete pavement is another means. For short lengths of pavement less than 200 feet, the Concrete Pavement Alternate detail with a sleeper slab and joint materials shown in SD 2.01 may be used.

Pavement growth is caused by cyclic temperature changes which cause the pavement joints to open during cold temperatures and close during hot temperatures. If the joints are not properly sealed and well-maintained, they will fill up with incompressible material during cold cycles and close during hot cycles. This cyclic process of the pavement joints opening, filling up with material and closing, builds up huge compressive forces in the pavement. As the forces increase, the free ends of the pavement will move. A bridge abutment expansion joint will act as a free end of the pavement, forcing the expansion joint to close and damaging the abutment backwall. The anchor slabs are designed to resist this movement by mobilizing the passive soil pressure through the lugs.

Anchor slabs serve a dual purpose of providing protection to the pavement and to the abutment backwall due to pavement growth. In addition they can provide a structural foundation for bridge barriers or transitions.

Two anchor slab options are provided.

Type 1 (SD 2.02) is used when the length of the approach pavement exceeds 700 feet.

Type 2 (SD 2.03) is used when the length of the approach pavement is between 200 and 700 feet.

The bridge drawings should specify which of the two SD drawings is to be used. The anchor slabs are designed to be used together with an approach slab and sleeper slab. The approach slab must be squared off to be compatible with the anchor slab details.

Selection of the appropriate approach and anchor slabs should be performed with close consultation with the project geotechnical engineer and concrete pavement designer. Documentation of the selection should be recorded in the Bridge Selection and Bridge Geotechnical Reports.

The transverse reinforcing in the anchor slab is adequate to act as a structural support for a barrier or transition. No additional reinforcing is required for this application.

Anchor slabs are bid by the square foot; the price including all excavation, concrete, reinforcing steel, and load transfer dowels included in the anchor slab.

Arizona Department of Transportation
Bridge Group

BRIDGE PRACTICE GUIDELINES

Section 11 – Retaining Walls & Sound Barrier Walls

Sound Barrier Walls

SD 8.01 Sound Barrier Wall (Concrete)
SD 8.02 Sound Barrier Wall (Masonry), Sheet 1 of 2
SD 8.02 Sound Barrier Wall (Masonry), Sheet 2 of 2

Arizona Department of Transportation
Bridge Group

BRIDGE PRACTICE GUIDELINES

SECTION 13 - RAILINGS

General

General Considerations ---------- 2
Test Level Selection ---------- 3
Bridge Railing Design ---------- 4

Limit States and Resistance Factors

Traffic Railing

SD 1.01 (32 Inch F-Shaped Bridge Concrete Barrier and Transition)
SD 1.02 (42 Inch F-Shaped Bridge Concrete Barrier and Transition)
SD 1.06 (Two Tube Bridge Rail)

Approach Railing

SD 1.03 (Thrie Beam Guard Rail Transition System)

Pedestrian Railing

Bicycle Railing

Combination Railing

SD 1.04 (Combination Pedestrian - Traffic Bridge Railing)

SD 1.05 (Pedestrian Fence for Bridge Railing SD 1.02)

GENERAL CONSIDERATIONS

According to FHWA requirements, all proposed new bridge railings for use on the National Highway System should meet the crash testing requirements of NCHRP Report 350, "Recommended Procedures for the Safety Performance Evaluation of Highway Features", after October 1, 1998

Bridge Railing design for new bridges should be based on the current AASHTO LRFD Bridge Design Specifications for the selected Test Level.

All new bridge railings installed on the State Highway System should have a minimum of TL-4 rating. The preferred TL-4 bridge railing is the 32" F-shape concrete barrier; and the preferred TL-5 bridge railing is the 42" F-shape concrete barrier. Other acceptable TL-4 and TL-5 bridge railings are available from Bridge Group.

Bridge railings currently in use that have been found acceptable under the crash testing and acceptance criteria specified in NCHRP Report 230, or AASHTO Guide Specifications for Bridge Railings will be considered as meeting the requirements of NCHRP Report 350 without the need of further testing as indicated in the following table:

Testing Criteria	Acceptance Equivalencies		
NCHRP Report 350	TL-2	TL-4	TL-5
AASHTO Guide Specifications	PL-1	PL-2	PL-3

For bridge modification considerations, existing bridge railings will normally be evaluated using AASHTO Standard Specifications for Highway Bridges and bridge railing replacements should be designed to either the AASHTO Standard Specifications or to the AASHTO LRFD Bridge Design Specifications, as appropriate on a case-by-case basis.

TEST LEVEL SELECTION

Test Level definitions are in accordance with NCHRP Report 350 and as summarized below:

Test Level 1 (TL-1) is generally acceptable for work zones with low posted speeds and very low volume, low speed local streets.

Test Level 2 (TL-2) is generally acceptable for most local and collector roads with favorable site conditions, work zones and where small number of heavy vehicles is expected and posted speeds are reduced.

Test Level 3 (TL-3) is generally acceptable for a wide range of high speed arterial highways with very low mixtures of heavy vehicles and with favorable site conditions.

Test Level 4 (TL-4) is generally acceptable for the majority of applications on high speed highways, freeways, expressways and interstate highways with a mixture of trucks and heavy vehicles. TL-4 railings are expected to satisfy the majority of interstate design requirements.

Test Level 5A (TL-5A) is generally acceptable for the same application as TL-4 when site conditions, in-service performance, or accident records justify a higher level of rail resistance. TL-5A is a modification of TL-5 as described in NCHRP Report 350. TL-5A provides for the railing resistance of a lighter van-type tractor trailer with lower center of gravity. This bridge rail will satisfy the design requirements where TL-4 railings are deemed to be inadequate, but TL-5 or TL-6 railings are excessive.

Test Level 5 (TL-5) and Test Level 6 (TL-6) are generally acceptable for applications on high speed, high traffic volume freeways with high ratio of heavy vehicles and unfavorable site conditions. Unfavorable site conditions include, but are not limited to, the combination of reduced radius of curvature, steep down grades on curvature, variable cross slope or adverse weather conditions.

BRIDGE RAILING DESIGN

The following two tables provide design forces and crash test criteria associated with Test Levels 4 through 6. Further bridge railing selection criteria and design information can be found in AASHTO LRFD Bridge Design Specifications.

Design Forces and Designations	TL-4	Tl-5A	TL-5	TL-6
F_T , Transverse (KIP)	54	116	124	175
F_L , Longitudinal (KIP)	18	39	41	58
F_V , Vertical (KIP) Down	18	50	80	80
L_T , and L_L, (FT)	3.5	8.0	8.0	8.0
Lv, (FT)	18	40	40	40
H_E , (min) (IN)	32	40	42	56
Minimum Height of Rail (IN)	32	40	54	90

Vehicle Characteristics	Small Autos		Pickup Truck	Single-Unit Van Truck	Van-Type Tractor Trailers	Van-Type Tractor Trailers	Tractor Tanker Trailers
W (KIP)	1.55	1.8	4.5	18.0	50.0	80.0	80.0
B (FT)	5.5	5.5	6.5	7.5	8.0	8.0	8.0
G (IN)	22	22	27	49	64	73	81
Crash angle,q	20	20	25	15	15	15	15
Test Level	Test Speeds (MPH)						
TL-4	60	60	60	50	N/A	N/A	N/A
TL-5A	60	60	60	N/A	50	N/A	N/A
TL-5	60	60	60	N/A	N/A	50	N/A
TL-6	60	60	60	N/A	N/A	N/A	50

Arizona Department of Transportation
Bridge Group

BRIDGE PRACTICE GUIDELINES

SECTION 14 – JOINTS AND BEARINGS

Chapter	Page	Issue Date
SCOPE	3	7/12/01
DEFINITIONS	3	7/12/01
GENERAL DESIGN REQUIREMENTS	4	7/12/01
Movement Rating	4	7/12/01
DECK JOINTS	6	7/12/01
General	6	7/12/01
Plan Preparation	8	7/12/01
Compression Seals	9	7/12/01
Strip Seals	10	7/12/01
Modular Joints	10	7/12/01
BEARINGS	11	7/12/01
General	11	7/12/01
Neoprene Strips	11	7/12/01
Figure 1 – Neoprene Strips Details	13	7/12/01
Elastomeric Bearing Pads	14	7/12/01
Figure 2 – Elastomeric Bearing Pads with Sliding Plates Details	16	7/12/01
Sliding Elastomeric Bearing Pads	17	7/12/01
Steel Bearings	17	7/12/01
High-Load Multi-Rotational Bearings	17	7/12/01
RESTRAINING DEVICES	18	7/12/01
Vertical Fixed Restrainers	18	7/12/01
Figure 3 – Fixed Restrainer Detail	19	7/12/01
Vertical Expansion Restrainers	20	7/12/01

Figure 4 – Expansion Restrainer Detail **21** **7/12/01**
External Shear Keys **22** **7/12/01**
Internal Shear Keys **22** **7/12/01**
Keyed Hinge **22** **7/12/01**
Restrainer Applications **22** **7/12/01**

SCOPE

This section contains guidelines to supplement provisions of Sections 3, 14, 15, 19 and 20 of the AASHTO Specifications for the design and selection of bridge expansion joints, bearings and restraining devices.

Bridge Group's design philosophy is to prefer continuous bridges with minimal number of joints to improve the weather and corrosion-resisting effects of the whole bridge, reduce inspection efforts and maintenance costs, and increase structural effectiveness and redundancy. However, bridges with expansion joints at the abutments are preferred to jointless bridges with integral abutments.

DEFINITIONS

Bearing - A structural device that transmits loads while facilitating translation and/or rotation.

Disc Bearing – A bearing which accommodates rotation by deformation of a single elastomeric disc, molded from a urethane compound. It may be movable, guided, unguided, or fixed. Movement is accommodated by sliding of polished stainless steel on PTFE.

Fiberglass Reinforced Pad - A pad made from discrete layers of elastomer and woven fiberglass bonded together during vulcanization.

Fixed Bearing - A bearing which prevents differential longitudinal translation of abutting structure elements. It may or may not provide for differential lateral translation or rotation.

High-Load Multi-Rotational Bearing - A bearing consisting of a rotational element of the pot-type, disc-type or spherical-type when used as a fixed bearing and may, in addition, have sliding surfaces to accommodate translation when used as an expansion bearing. Translation may be constrained to a specified direction by guide bars.

Joint - A structural discontinuity between two elements. The structural members used to frame or form the discontinuity.

Joint Seal - A preformed elastomeric device designed to prevent moisture and debris from penetrating joints.

Metal Rocker Bearing - A bearing which carries vertical load by direct contact between two metal surfaces and which accommodates movement by rocking or rolling of one surface with respect to the other.

Plain Elastomeric Pad - A pad made exclusively of elastomer which provides limited translation and rotation.

Pot Bearing - A bearing which carries vertical load by compression of an elastomeric disc confined in a steel cylinder and which accommodates rotation by deformation of the disc.

PTFE - Polytetrafluorethylene, also known as Teflon.

PTFE Sliding Bearing - A bearing which carries vertical load through contact stresses between a PTFE sheet or woven fabric and its mating surface and which permits movements by sliding of the PTFE over the mating surface.

Setting Temperature - An average temperature for the structure used to determine the dimensions of a structure when a component is added or set in place.

Sliding Bearing - A bearing which accommodates movement by translation of one surface relative to another.

Spherical Bearing – A steel bearing with matching curved surfaces and a low friction sliding interface.

Steel Reinforced Elastomeric Bearing - A bearing made from alternate laminates of steel and elastomer, bonded together during vulcanization. Vertical loads are carried by compression of the elastomer. Movements parallel to the reinforcing layers and rotations are accommodated by deformation of the elastomer.

GENERAL DESIGN REQUIREMENTS

Movement Ratings

Provisions shall be made in the design of structures to resist induced stresses or to provide for movements resulting from variations in temperature and anticipated shortening due to creep, shrinkage or prestressing. Accommodation of thermal and shortening movements will entail consideration of deck expansion joints, bearing systems, restraining devices and the interaction of these three items.

The main purpose of the deck joint is to seal the joint opening to obtain a watertight joint while allowing for vertical, horizontal and/or rotational movement. The bearings are required to transmit the vertical and lateral loads from the superstructure to the substructure units and to allow for movement in the unrestrained directions. Restraining devices are required to limit the displacement in the restrained directions. Improper design or construction of any of these devices could adversely affect the operation of the other devices.

The required movement rating is equal to the total anticipated movement (i.e. the difference between the widest and the narrowest opening of a joint). The calculated movements used in determining the required movement rating shall be the sum of the movement caused by temperature changes and the movement caused by creep and shortening as specified below:

Mean temperature and temperature ranges shall be as specified below:

		Concrete		**Steel**	
Elevation (ft)	**Mean (^oF)**	**Rise (^oF)**	**Fall (^oF)**	**Rise (^oF)**	**Fall (^oF)**
Up to 3000	70	30	40	60	60
3000 - 6000	60	30	40	60	60
Over 6000	50	35	45	70	80

To allow for the effects of shrinkage in reinforced concrete members, a shortening of 0.0002 ft/ft should be used.

For precast prestressed concrete members, to allow for the effects of long term creep and shrinkage, the following shortening shall be considered:

Joints: 1/4 inch per 100 feet.
Bearings: 1/2 inch per 100 feet.

For cast-in-place post-tensioned concrete box girder bridges, the effects of elastic shortening shall be considered in determining the movement for the bearings. To allow for the effects of long term creep and shrinkage in these bridges, the following shortening shall also be included:

Joints: 1/2 inch per 100 feet.
Bearings: 1 inch per 100 feet.

In addition, the effects of bridge skew, curvature and neutral axis location shall be considered. The neutral axis of the girder and the neutral axis of the bearing seldom coincide resulting in the rotation of the girder inducing either horizontal movements or forces at the joint or bearing level.

Unless a more precise method of measuring the temperature of the main superstructure members is used, the setting temperature of the bridge shall be taken as the mean shade air temperature under the structure. This temperature shall be the average over the 24 hour period immediately preceding the setting event for steel bridges and over 48 hours for concrete bridges. The setting temperature is used in installing expansion bearings and deck joints.

The design rotation shall be the sum of (1) the rotation caused by design loads including dead load and live load plus impact, plus (2) allowances for uncertainties and (3) allowances for fabrication and installation tolerances. The minimum value for rotation due to design loads plus an allowance for uncertainties should not be less than 0.01 radians. The magnitude of the fabrication and installation tolerances should not be taken as less than 0.01 radians.

DECK JOINTS

General

The movement rating for joints for steel structures shall be based primarily on the thermal expansion and contraction characteristics of the superstructure, while for concrete structures the effects of shortening due to creep, shrinkage and prestressing shall be added. Movement ratings shall be based on temperature variations as measured from the assumed mean temperature. There is an uncertainty in determining both the actual temperature of the structure at the time of installation and the mean temperature of the specified site. To allow for the inevitable uncertainties the design mean temperature should be assumed to vary by plus or minus 10 degrees. This can be accomplished by adding 10 degrees to both the published rise and fall temperature ranges in determining the required movement rating for a joint. However, do not add this additional 10 degrees to the temperature correction chart shown on the drawings.

Published movement ratings are usually based on the difference between the maximum and minimum openings without consideration to the required minimum installation width. In determining the movement rating, consideration must be given to the installation width required to install the seal element.

Other factors to be considered in determining the required movement rating include consideration of the effects of any skew, anticipated settlement and rotations due to live loads and dead loads, where appropriate.

Items requiring attention include:

1) The type of anchorage system to be used.
2) The method of joint termination at the ends.
3) The method of running joints through barriers, sidewalks and medians.
4) Physical limitation on size of joints.
5) Susceptibility of joint to leakage.
6) Possible interference with post-tensioning anchorages.
7) Selection of appropriate modular proprietary systems that meet design requirements.
8) Forces applied to the surrounding concrete by the joint.
9) Specifying the use of a continuous seal element.

For skewed bridges, the transverse movement along the joint shall be the calculated movement rating along the bridge centerline times the sine of the skew angle. The longitudinal movement normal to the joint shall be the calculated movement rating along the bridge centerline times the cosine of the skew angle.

For a curved superstructure that is laterally unrestrained by guided bearings or shear keys, the direction of longitudinal movement at a bearing joint may be assumed to be parallel to the chord of the deck centerline taken from the joint to the neutral point of the structure.

The rolling resistance of rocker and rollers, the shear resistance of elastomeric bearings, or the frictional resistance of bearing sliding surfaces will oppose movement. In addition, the rigidity of abutments and the relative flexibility of piers of various heights and foundation types will affect the magnitude of bearing movement and the bearing forces opposing movement. These forces should be considered in determining substructure forces.

Where practicable, construction staging should be used to delay construction of abutment and piers located in or adjacent to embankments until the embankments have been placed and consolidated. Otherwise, deck joints should be sized to accommodate the probable abutment and pier movements resulting from embankment consolidation after their construction.

Closure pours in concrete structures may be used to minimize the effect of prestress-induced shortening on the width of seals and the size of bearings and to ensure proper placement of the joint and consolidation of the surrounding concrete.

For concrete superstructures, consideration shall be given to the opening of joints due to creep and shrinkage, which may require initial minimum openings of less than 1 inch. Joints in concrete decks should be armored with steel shapes. Such armor shall be recessed below roadway surfaces and be protected from snowplows. Snowplow protection for deck joint armor and joint seals may consist of:

- Concrete buffer strips 12 to 18 inches wide with joint armor recessed 1/4 to 3/8 inches below the surface of such strips.
- Tapered steel ribs protruding up to 1/2 inch above roadway surfaces can be used to lift the plow blades as they pass over the joints.

Additional precautions to prevent damage by snowplows should be considered where the skew of the joints coincides with the skew of the plow blades, typically 30 to 35 degrees. Details for snowplow protection should be closely coordinated with Bridge Group and the District.

Joint-edge armor embedded in concrete should have 1/2 inch minimum diameter vertical vent holes spaced on not more than 12 inches. Vent holes are necessary to help expel

entrapped air and facilitate the attainment of a solid concrete support under the joint edge armor.

Joint designs shall include details for transverse field splices for staged construction and for joints longer than 60 feet. Where practicable, splices should be located outside of wheel paths and gutter areas and at or near the crown or high point. Details in splices should be selected to maximize fatigue life. Field splices provided for staged construction shall be located with respect to other construction joints to provide sufficient room to make splice connections. The contract documents should require that permanent seals not be placed until after joint installation has been completed. Where practicable, only those seals that can be installed in one continuous piece should be used. Where field splicing is unavoidable, splices should be vulcanized.

Available joint types include compression seals, strip seals, and modular joints. Compression seal joints and strip seal joints are generic and should be detailed on the plans by referencing the appropriate SD drawings and covered in the Special Provisions. Modular joints are proprietary and require that the designer specify acceptance criteria on the plans and in the specifications. The modular joint stored item specification, 601MODJT, should be included in the contract documents and can be obtained from Contracts and Specifications.

Plan Preparation

The following features of joints should be shown on the structural drawings:

1) Blockout details showing a secondary pour, including blockout dimensions and additional reinforcing required.
2) Required end treatment in barriers or curbs, including enough detail or explanation to accommodate potential proprietary systems. This would include the need for cover plates and how to terminate the joint in sidewalks and separation barriers.
3) Consideration to traffic control in determining section pattern lengths.
4) Movement rating.
5) Assumed temperature and opening at time of installation with temperature correction table showing the joint opening at various temperatures.
6) Actual horizontal length of joint measured from inside of barrier face to inside of barrier face corrected for skew and superelevation.
7) The need for galvanizing if required.

The following features of joints should be specified in the specifications or special provisions:

1) For modular joints, the acceptance criteria, steel edge beam material and the requirements for a trained factory representative.

2) Method of measurement (by linear foot from face to face of barrier).

The contract drawings should show the method of seal termination in barriers, sidewalks and raised medians. In general the seal should be turned up a minimum of 6 inches or 2 inches above the high water depth at the curb to keep the roadway water in the roadway drainage collection system. To prevent debris from entering the void area, and to prevent construction errors, the seal should be turned up at both the low and high sides.

For bridges in non-corrosive environments, the non-contact surfaces of the steel armor shall be painted for A36 steel or left unpainted for A588 steel. For bridges where de-icing salts are used and for bridges above 5000 feet, the armor should be galvanized. The need for galvanizing shall be specified on the contract drawings.

Compression Seals

Compression seal joints should generally conform to the details shown in SD 14.01. Proprietary alternates to this detail will not be allowed. The compression seal element should have a shape factor of 1:1 (width to height) to minimize side wall pressure. The size of the compression seal shall be specified on the drawings.

For this type of joint, effective movement ratings range up to 2.5 inches. Advantages for this type of joint include its low cost, proven performance and acceptance for use on pedestrian walkways without the need for cover plates. However, this type of joint can not be unbolted and easily raised, it generates pressure and is not suitable for high skews or horizontal directional changes.

For skewed bridges, the transverse movement should be less than 20 percent of the nominal seal dimension. This longitudinal movement should be less than the specified movement rating for the seal. The maximum allowed skew for use of a compression seal is 45 degrees with 30 degrees the preferred limit.

Compression seals shall be supplied full length unspliced. Where the length of the deck joint is less than 60 feet the deck joint shall be supplied in one piece and the seal may be factory installed. Where phase construction is required or where the deck joint is longer than 60 feet, the armor may be supplied in pieces and spliced in the field. However, the seal shall be installed in one piece. Consideration must then be made for the minimum installation width of the seal. Typically the seal can be easily installed if the opening is approximately 60% of the nominal seal dimension but can be installed with openings as low as 50%. The general guideline is to set the joint opening at the mean temperature for the 60% width. This will allow easy installation at the mean temperatures but still allow for installation at higher temperatures.

Bid Item	**Description**	**Measurement**
6011346	Deck Joint Assembly (2x2 compression seal)	LF
6011347	Deck Joint Assembly (3x3 compression seal)	LF
6011348	Deck Joint Assembly (4x4 compression seal)	LF

6011349	Deck Joint Assembly (5x5 compression seal)	LF

Strip Seals

Strip seals should generally conform to the details shown in SD 14.02. Proprietary alternates to this detail other than those shown in the drawing will not be allowed.

For this type of joint, effective movement ratings range up to 4 inches. This type of joint is best used when the movement rating is beyond the capacity of compression seals and for large skews. Strip seal joints will require cover plates for pedestrian walkways.

The seals shall be supplied continuous in one piece. Since the seal must be installed after the armor is set in concrete, a minimum installation opening must be provided. In general, an opening of 1.75 inches is preferred for easy installation but the seal can be installed in openings as small as 1.5 inches. The opening at the mean temperature should be set to 1.75 inches whenever possible.

Bid Item	Description	Measurement
6011345	Deck Joint Assembly (strip seal joint)	LF

Modular Joints

Modular joints are very complex joint systems. Effective movement ratings range from 4 inches up to 30 inches. Modular joints are the best choice for movement ratings over 4 inches but are very costly and should be avoided whenever possible.

The joints will be required to satisfy all requirements specified in the stored item specification, 601MODJT. Information concerning specific design parameters and installation details of modular joints should be obtained from literature supplied by the manufacturer of the system. It is the responsibility of the designer to review the proprietary joint literature and related manufacturer's specifications to ensure that the selected joint types are properly specified and compatible with the design requirements.

Bid Item	Description	Measurement
6011355	Deck Joint Assembly (Modular, Movement Rating)	LF

BEARINGS

General

Unlike joints, where the opening can be adjusted if the ambient temperature at the time of construction is different than the assumed mean temperature, bearings must be designed to be installed at temperatures other than the mean temperature. For this reason, the movement rating should be based on the full temperature range and not the rise or fall from a mean temperature.

Calculation of the movement rating shall include thermal movement and anticipated shortening due to creep, shrinkage and prestressed shortening. For cast-in-place post-tensioned concrete box girder bridges both the elastic and long term prestress shortening effects shall be considered.

Permissible bearing types include neoprene strips, elastomeric bearing pads, sliding elastomeric bearings, steel bearings and high-load multi-rotational bearings (pot, disc or spherical).

Neoprene strips, elastomeric bearing pads and steel bearings are generic and shall be detailed on the drawings and/or covered in the specifications. High-load multi-rotational bearings are proprietary bearing types and require that the designer include a Bearing Schedule in the plans and review the appropriateness of the specification to the specific application and design requirements. Sliding elastomeric bearings can be either generic or proprietary in that a generic bearing should be designed and detailed on the plans with proprietary alternates allowed.

All bearing types except elastomeric bearing pads shall be designed for impact.

For bearings with sliding surfaces, an initial offset of the top sliding surface from the centerline of bearing should be calculated and shown on the plans so that the top sliding surface will be centered over the bottom sliding surface and the centerline of bearing after all shrinkage, creep and post-tensioning shortening has taken place in the superstructure.

Neoprene Strips

Neoprene strips consist of a sliding plate on a continuous neoprene pad conforming to the details shown in Figure 1.

Where appropriate, neoprene strips are the preferred bearing type for post-tensioned box girder bridges. However, neoprene strips are not appropriate for the following applications:

- Curved bridges

- Bridges with cross slopes greater than 0.02 ft/ft
- Bridges skewed greater than 20 degrees
- Bridges with contributing spans greater than 125 feet
- Bridges where initial shortening due to prestressing is greater than 1 inch
- Bridges where the movement rating including elastic shortening, long term creep and shrinkage and temperature is greater than 1.5 inches
- Bridges where high shear forces are detrimental to the abutment

No bid item number is required for neoprene strips as the cost is included in the bid item for concrete or prestressed member as appropriate. As such they are not bid as a separate item.

FIGURE 1
NEOPRENE STRIPS DETAILS

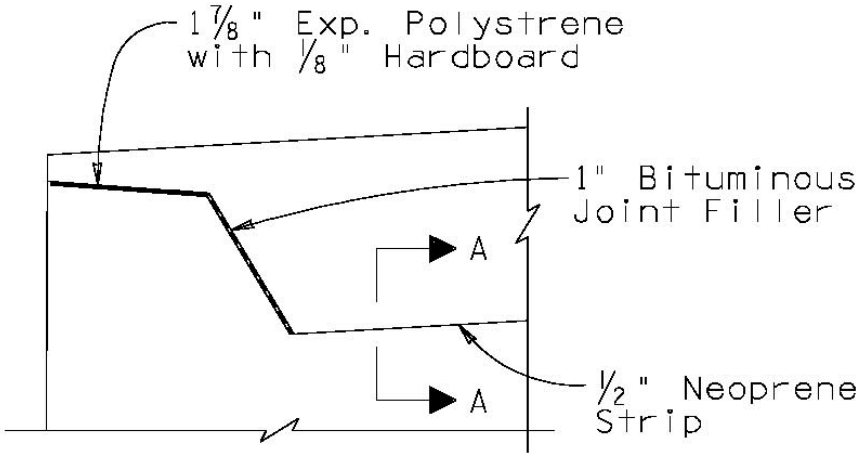

PARTIAL ELEVATION

No Scale

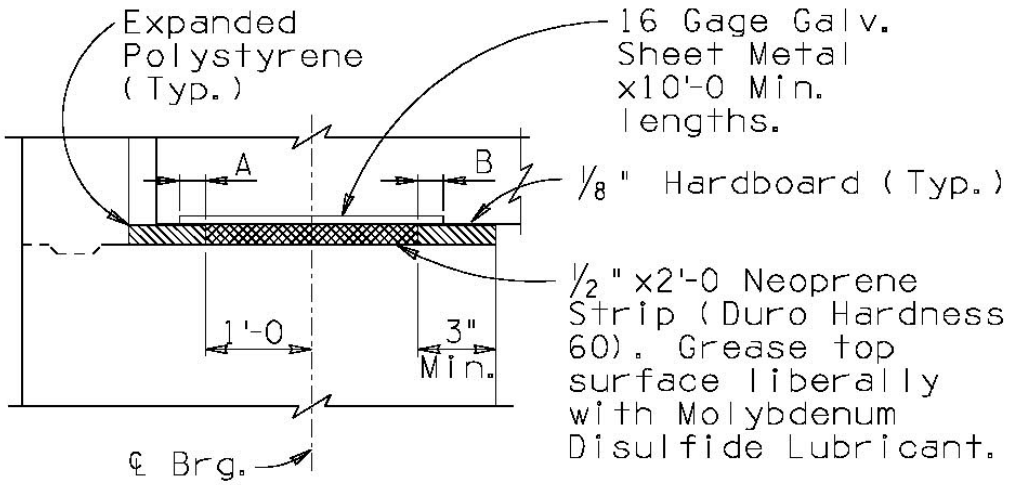

SECTION A-A

No Scale

A = Movement due to temperature fall + rise + prestress shortening (elastic + long term) + 1" Min.

B = Movement due to temperature rise + fall + + 1/2" Min.

Elastomeric Bearing Pads

Elastomeric bearing pads shall conform to the design requirements of Section 14 of AASHTO and the testing requirements contained in Section 1013 of the ADOT Standard Specifications. Due to their higher load capacity and superior performance, steel reinforced elastomeric bearings constructed using steel laminates should be used in lieu of fiberglass reinforced pads. The following data should be shown on the plans:

- Length, width and thickness of pad
- Design Method (A or B)
- Design Load
- Low Temperature Zone (A, B or C)
- Elastomer Grade (0,2 or 3)
- Shear Modulus
- Durometer Hardness

The number and type of laminates shall not be detailed on the plans but are covered in the Standard Specifications.

Normally Design Method A will be used in design. However, for special bridges with high reactions, Design Method B may be used provided the special testing is performed.

The following should be used as a guide for determining low temperature zones:

Elevation (ft)	Zone
Below 3000	A
3000 - 6000	B
Above 6000	C

The elastomer grade shall be as specified in AASHTO Table 14.6.5.2-2.

There is concern regarding the appropriateness of the current equation for the rotation capacity of elastomeric bearing pads in the current AASHTO Specification. Until this issue has been resolved these equations should not be used. Rotation capacity should be calculated based on the equations contained in the AASHTO Specification, 15th Edition, 1992.

Only the following three combinations of shear modulus and durometer hardness should be specified:

Shear Modulus (psi)	Durometer Hardness
110	50
130	55
160	60

Pads shall have a minimum thickness of one inch and be designed in 0.5 inch thick increments. The use of elastomeric bearing pads should generally be limited to a thickness not greater than 4 inches. Holes will not be allowed in the pads. Tapered pads are not allowed. When the rotation demands exceed the pad capacity, tapered steel plates shall be used.

Width and length dimensions shall be detailed in one inch increments. When used with prestressed I-girders, pads shall be sized a minimum width of 2 inches less than the nominal width of the girder base to accommodate the 3/4 inch side chamfer and shall be set back 2 inches from the end of the girder to avoid spalling of the girder ends.

Elastomeric bearing pads should not be used in cases where deck joints or bearings limit vertical movements, such as in older style sliding steel plate joints or widenings where existing steel bearings are to remain.

Elastomeric bearing pads are the preferred bearing type for new steel girders, precast prestressed girders and post-tensioned box girder bridges where neoprene strips are not appropriate.

Elastomeric bearing pads with greased sliding plates used on post-tensioned box girder bridges to limit the required thickness of the pad shall conform to the details shown in Figure 2. For this situation, the pad thickness should be determined based on temperature movements only, with the initial and long term shortening assumed to be taken by the sliding surface.

No bid item number is required for elastomeric bearing pads or elastomeric bearing pads with greased sliding plates as the cost is included in the bid item for concrete or prestressed member as appropriate. As such they are not bid as a separate item.

FIGURE 2
ELASTOMERIC BEARING PADS WITH GREASED SLIDING PLATES

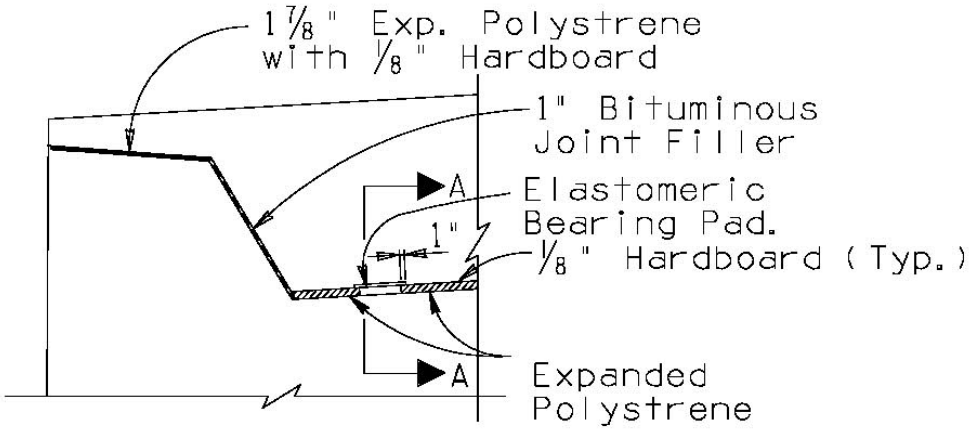

PARTIAL ELEVATION

No Scale

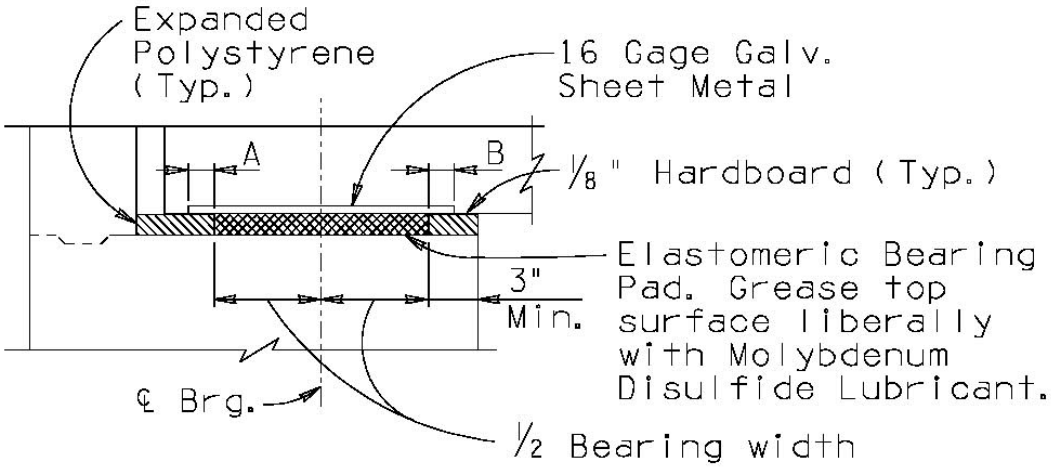

SECTION A-A

No Scale

A = Movement due to temperature fall + prestress shortening (elastic + long term) + 1" Min.

B = Movement due to temperature rise + 1/2" Min.

Sliding Elastomeric Bearing Pads

Sliding elastomeric bearings consist of an upper steel bearing plate anchored to the superstructure, a stainless steel undersurface and an elastomeric pad with a teflon coated upper surface. The teflon surface shall be attached to a 3/8 inch minimum thick plate which is vulcanized to the elastomeric pad. The bearing accommodates horizontal movement through the PTFE sliding surface and rotation through the elastomeric bearing with the thickness of the elastomeric bearing determined by the rotational and friction force requirements. Keepers may be used for horizontal restraint of the pads. Vertical restraint may be provided by anchor bolts with slotted keeper plates or individual vertical restrainers as appropriate.

The bearing pad dimensions and all details of the anchorage and restraint systems shall be shown on the drawings. The required coefficient of friction must be shown on the drawings with the requirement that the bearing be tested for this value. This coefficient should be consistent with the values shown in AASHTO Table 14.6.2.5-1 for a given normal stress. Special Provisions are required and should allow for proprietary alternates.

Sliding elastomeric bearings should be considered for applications where regular elastomeric bearing pads would exceed 4 inches in height or where special access details would be required for other proprietary bearings in such places as hinges.

Bid Item	**Description**	**Measurement**
6015203	Bearings (Sliding Elastomeric)	Each

Steel Bearings

Steel bearings may consist of metal rockers or fixed or expansion assemblies which conform to the requirements specified in Section 10 of AASHTO.

Steel bearings are not a preferred bearing type and their use should normally be limited to situations where new bearings are to match the existing bearing type on bridge widening projects.

Steel bearings are bid by the pound of Structural Steel (Miscellaneous). See table below.

Bid Item	**Description**	**Measurement**
6040003	Structural Steel (Miscellaneous)	Each

High-Load Multi-Rotational Bearings

High-load multi-rotational fixed bearings consist of a rotational element of the Pot-type, Disc-type or Spherical-type. High-load multi-rotational expansion bearings consist of a rotational element of the Pot-type, Disc-type or Spherical-type, sliding surfaces to

accommodate translation and guide bars to limit movement in specified directions when required.

Pot bearings consist of a rotational element comprised of an elastomeric disc totally confined within a steel cylinder. Disc bearings consist of rotational element comprised of a polyether urethane disc confined by upper and lower steel bearing plates and restricted from horizontal movement by limiting rings and a shear restriction mechanism. Spherical bearings consist of a rotational element comprised of a spherical bottom convex plate and mating spherical top concave plate.

Knowledge and performance of this bearing type is constantly being upgraded. As such, when its usage is required, the designers shall research the current LRFD Specifications, the most up-to-date bearing research and past ADOT design requirements to develop the most current state-of-the-art Special Provisions. The design and manufacture of multi-rotational bearings relies heavily on the principles of engineering mechanics and extensive practical experience in bearing design and manufacture. Therefore, in special cases where structural requirements fall outside the normal limits, a bearing manufacturer should be consulted. The user is responsible for determining the applicability of the LRFD Specifications and advances in bearing technology to the above criteria on their specific project. Close coordination with Bridge Group will be required.

Bid Item	Description	Measurement
6015200	High-Load Multi-Rotational Bearings	Each

RESTRAINING DEVICES

Restraining devices are meant to prohibit movement in a specified direction. Restraining devices shall be designed to resist the imposed loads including seismic as specified in AASHTO and as modified in these Bridge Practice Guidelines.

Restraining devices could include concrete shear keys or end blocks, horizontal or vertical cable restrainers or mechanical restraining devices which could be an integral part of a bearing or a separate system. Restraining devices to prohibit vertical displacement at expansion ends, shall be designed to allow for inspection and future replacement of bearings.

Allowable restraining devices include, but are not limited to the following: vertical fixed restrainers, vertical expansion restrainers, external shear keys, internal shear keys and keyed hinges.

Vertical Fixed Restrainers

Vertical fixed restrainers consist of cable and appropriate hardware as shown in Figure 3. These restrainers are designed to allow rotation but no translation in either horizontal or vertical directions. Vertical fixed restrainers should be designed for a minimum vertical

uplift force of 10% of the dead load reaction. Each cable may be assumed to have an allowable working load of 21 kips. Refer to Figure 3 for the fixed restrainer detail. This vertical fixed restrainer detail can be found in the Bridge Cell Library under the cell name VR2 (Fix Restr. Det).

FIGURE 3
FIXED RESTRAINER DETAIL

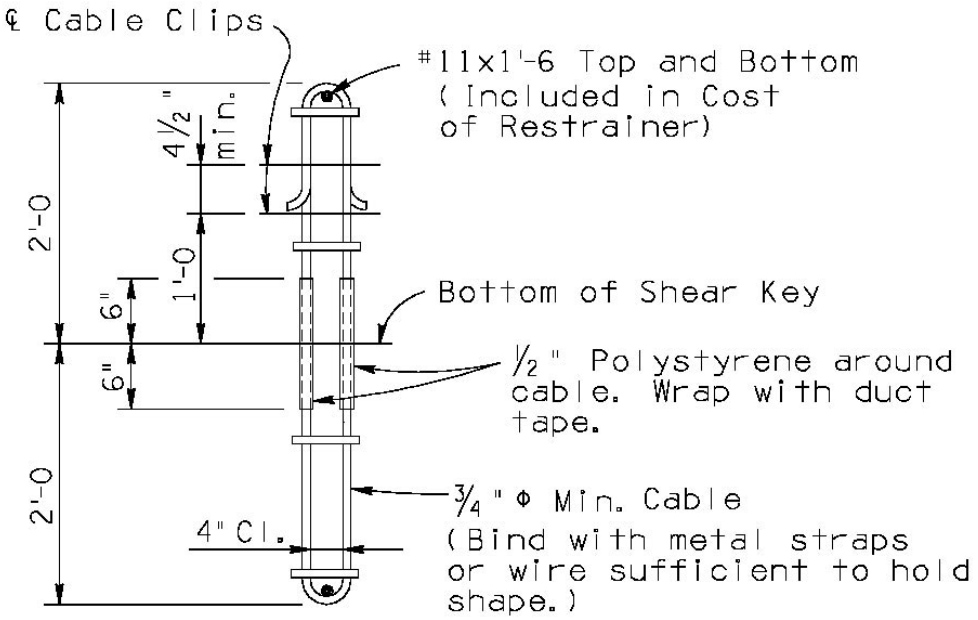

NOTES:

Restrainer Cables shall be ¾" Φ preformed 6x19 galvanized with the minimun breaking strength of 42 Kips. One sample of cable 3 feet in length shall be furnished to the Engineer for testing.

Bid Item	Description	Measurement
6015101	Restrainers, Vertical Earthquake (Fixed)	Each

Vertical Expansion Restrainers

Vertical expansion restrainers consist of cable and appropriate hardware as shown in Figure 4. These restrainers are designed to allow rotation and longitudinal translation but no transverse translation. Some limited vertical displacement is allowed to permit replacement of bearings if required. These devices are designed for a maximum movement of 4 inches. Vertical expansion restrainers should be designed for a minimum vertical uplift force of 10% of the dead load reaction. Each cable may be assumed to have an allowable working load of 21 kips. Please refer to Figure 4 for expansion restrainer detail. This vertical expansion restrainer detail can be found in the Bridge Cell Library under the cell name VR1 (Exp Restr. Det).

FIGURE 4
EXPANSION RESTRAINER DETAIL

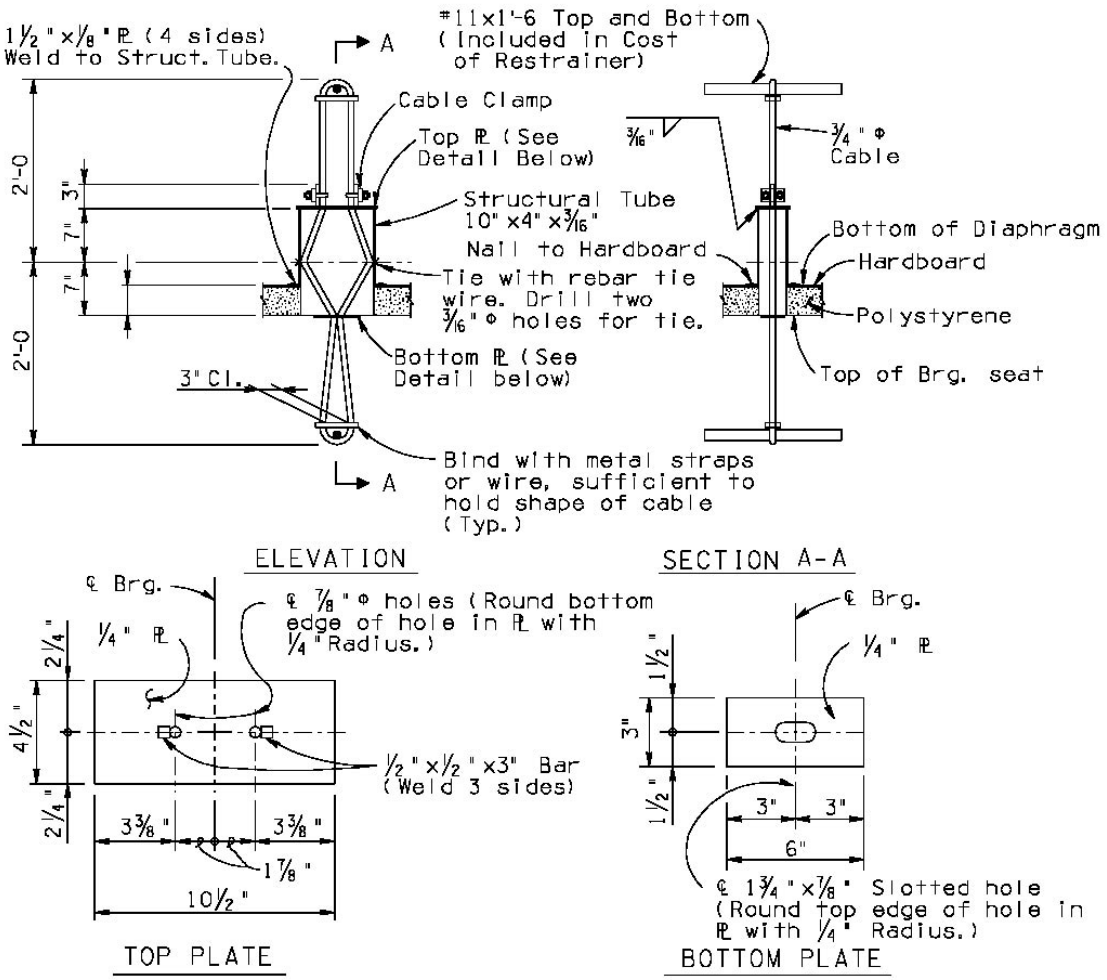

NOTES:

Seal all openings in structural tube to prohibit concrete intrusion.

Restrainer Cables shall be ¾" Φ preformed 6x19 galvanized with the minimum breaking strength of 42 kips. One sample of cable 3 feet in length shall be furnished to the Engineer for testing.

Bid Item	Description	Measurement
6015102	Restrainers, Vertical Earthquake (Expansion)	Each

External Shear Keys

External shear keys are reinforced concrete blocks designed to limit transverse displacement while allowing longitudinal and rotational movements. External shear keys are preferred to internal shear keys since they are more accessible for inspection and repairs and easier to construct.

Internal Shear Keys

Internal shear keys are reinforced concrete blocks designed to limit transverse displacement while allowing longitudinal and rotational movements.

Keyed Hinge

A keyed hinge is a restraining device which limits displacements in both horizontal directions while allowing rotation. Vertical fixed restrainers should be considered as reinforcing steel for shear friction design on the concrete shear key with an allowable working load of 21 kips per cable.

Restrainer Applications

For a typical expansion seat abutment where restraining devices are required, the restraining devices will consist of vertical expansion restrainers and external shear keys.

For a typical pinned seat abutment for a post-tensioned box girder bridge, restraining devices will consist of vertical fixed restrainers and external shear keys. For a typical pinned seat abutment for a prestressed girder bridge, restraining devices will consist of vertical fixed restrainers and external or internal shear keys.

For a typical expansion pier, restraining devices will consist of vertical expansion restrainers and internal shear keys.

For a typical pinned pier, restraining devices will consist of vertical fixed restrainers and internal shear keys or a keyed hinge.

Arizona Department of Transportation
Bridge Group

BRIDGE PRACTICE GUIDELINES

Section 15 – Traffic Structures

Median Sign Structures

SD 9.01 Median Sign Structure (Two Sided)
SD 9.02 Median Sign Structure (One Sided)

Tubular Sign Structures

SD 9.10 Tubular Sign Structure (Tubular Cantilever)
SD 9.20 Tubular Sign Structure (Tubular Frame)

*Variable Message Sign

SD 9.50 Variable Message Sign Tubular Frame (Sheets 1 to 5)
SD 9.51 Dual Variable Message Sign Tubular Frame *

* When SD 9.51 is incorporated into the project plan set it must be accompanied with SD 9.50 sheets 1 thru 5.

Arizona Department of Transportation
Bridge Group

BRIDGE PRACTICE GUIDELINES

SECTION 16 - BRIDGE CONSTRUCTION

Chapter	Page	Issue Date
SCOPE	2	10/12/99
DEFINITIONS	2	10/12/99
POST DESIGN SERVICES	2	
General Provisions	2	10/12/99
Pre-Construction Conference	3	10/12/99
Partnering Conference	3	10/12/99
Working Drawings	3	10/12/99
Change Orders, Force Accounts and Fiscal Variance Reports	19	10/12/99
Field Engineering	19	10/12/99
Value Engineering Proposals	21	10/12/99
BRIDGE CONSTRUCTION OVERLOAD POLICY	21	
General Provisions	21	10/12/99
Design Overloads	22	10/12/99
Wearing Surfaces	23	10/12/99
Deck Design	23	10/12/99
Superstructure Design	23	10/12/99
Substructure Design	24	10/12/99
Specifications	25	10/12/99
CONSTRUCTION JOINT GUIDELINES	25	
General Provisions	25	10/12/99
Longitudinal Construction Joints	26	10/12/99
Precast Concrete Girder Bridges	26	10/12/99
Steel Girder Bridges	27	10/12/99
Cast-in-Place Box Girder Bridges	28	10/12/99

SCOPE

This section provides supplemental information regarding the responsibilities of the bridge designer during the construction phase of the project and provides procedural and technical guidance. This information does not replace or supersede the Standard Specifications, Project Plans, Special Provisions or other official contract documents. The ADOT Construction Manual is also referred to as an excellent source for bridge construction information. This information is for general application so that information for specific projects may vary.

DEFINITIONS

Bridge Designer: The design team who produced the structural drawings and supporting documents for the bridge.

Bridge Design Engineer: The Arizona registrant who signed and sealed the structural drawings for the bridge.

Bridge Project Engineer: The Bridge Group engineer assigned to the project during the construction phase for both in-house and consultant designed projects.

Bridge Design Section Leader: The Bridge Group Section Supervisor assigned to the project.

State Bridge Engineer: The administrator of Bridge Group.

POST DESIGN SERVICES

General Provisions

The bridge design teams are advisors to the Resident Engineers for the construction of bridges and other structural related work. All communication, documents and correspondence should flow from and back to the Resident Engineer. The Resident Engineer or designated representative shall be kept informed of all pertinent structural information related to the project.

For all projects with major structures, the assigned Bridge Design Section Leader will assign a Bridge Project Engineer and issue a “Project Liaison Notice” to the Resident Engineer. For projects designed by consultants, the “Project Liaison Notice” will also identify the consultant Bridge Designer.

Pre-Construction Conference

The Resident Engineer holds a conference following award of the contract to review with the contractor and other stakeholders the requirements of the construction contract and to establish lines of communication. The Bridge Project Engineer will attend the meeting for all assigned projects containing major structures. The bridge designers and/or the Bridge Design Section Leader may also attend depending on the complexity of the project. For consultant designed projects, the Bridge Project Engineer will attend along with consultant bridge designers as appropriate. Proposed attendees will be indicated on the "Project Liaison Notice."

Partnering Conference

ADOT and Bridge Group encourages the foundation of a cohesive partnership with the contractor and its principal sub-contractors. The objectives of Partnering are effective and efficient contract performance and completion within budget, on schedule, and in accordance with the project plans and specifications. In accordance with Section 104 of the Standard Specifications and various policies, the Partnering Conference is usually held prior to the Pre-construction Conference. Attendance guidelines for bridge personnel will be the same for both of these conferences. Proposed attendees will be indicated on the "Project Liaison Notice."

Working Drawings

Working drawings are furnished by the contractor and shall include such detailed drawings and design sheets as may be required to perform the work that is not included with the contract documents furnished by the department. Examples of working drawing types related to structures include:

Falsework drawings
Forming plans for cast-in-place concrete
Precast girder details
Structural steel fabrication drawings
Temporary works, shoring, cofferdams, temporary bridges
Post-tensioning details
Sign structure details
Expansion joint details
Bearing details
Bridge railing details
Proprietary retaining wall details
Proprietary sound barrier wall details
Precast and stay-in-place deck panels
Miscellaneous proprietary details

General Provisions

The ADOT Standard Specifications, Section 105.03 describes the time allowed for the review of working drawings. This time does not include the time drawings are being revised by the contractor. The time period begins each time the contractor submits the original drawings or revised drawings to the Resident Engineer. In the spirit of "partnering", the Bridge Project Engineer can usually commit to a review period of two weeks or less if the project is not complex.

Working drawings which include drawings for falsework, shoring, soldier piles, cofferdams, temporary bridges and other major temporary support structures shall be prepared by and bear the seal and signature of a Professional Engineer.

All working drawings for in-house designs will be reviewed and approved by the appropriate Bridge Design Section team. All working drawings for consultant designs will be reviewed and approved by the appropriate consultant design team. "Approval" by the designer for the Engineer means approved for construction, fabrication or manufacture subject to the contractor's responsibility for the accuracy of the detailed contents. Refer to Sections 105.03 and 105.04 of the standard specifications for explanation of this important distinction.

Working drawings for bridges over or adjacent to railroad tracks shall be sent to the Project Manager who will then forward the drawings to the appropriate railroad company for their review and approval and return to the Project Manager and Engineer. The contractor should allow a minimum of three months for the review of complex working drawings such as falsework submitted for structures involving railroads.

Selected working drawings will become part of the final as-built structure drawings for permanent retention and microfilming. The selected working drawings include:

1. Post-tensioning details
2. Expansion joint details (non-standard only)
3. Proprietary bearing details
4. Proprietary retaining wall details
5. Proprietary sound barrier wall details
6. Precast and stay-in-place deck panels
7. Other working drawings for atypical structures as specified in the special provisions.

Drawing and submittal requirements are according to Section 105.03 of the Standard Specifications. All other working drawings will follow the review and approval process but will not require positive reproducibles for permanent retention and microfilming.

Upon completion of the Engineer's review of the working drawings, the drawings shall be stamped per the requirements of Section 105.03 of the Standard Specifications. All red lined revisions shall be made in red ink pen. The "approved" stamp should be applied with black ink, and all other stamps with red ink.

All positive reproducibles of selected working drawings for in-house designs shall be sent through the Resident Engineer to the appropriate Bridge Design Section. Positive reproducibles shall be stamped and noted the same as the approved working drawings and filed for future as-building. The design consultant will follow the same procedure for consultant designed projects, and hold the reproducibles in their files for future as-building by the consultant. (NOTE: working drawings for falsework, form work, other temporary works, standard details, structural steel fabrication, sign structures, bridge railings or other miscellaneous details do not need reproducibles or permanent retention unless specified in the Special Provisions because of their atypical nature.)

The Bridge Design Section red lined office copies of working drawings and calculations returned for corrections shall be kept (for reference) until the project has been completed. After a "Project Completion Notice" is received from Field Reports, the review copies may be discarded assuming no claims are still pending regarding the drawings. A copy of the "Completion Notice" will be given to the Bridge Project Engineer assigned to the project for this purpose. The final approved copy of the working drawings may remain in an example file for future reference, or it may be discarded if similar examples exist, as determined by the Bridge Project Engineer.

Falsework Drawings

Refer to sections 601-03.02 of the Standard Specifications and the ADOT Construction Manual for guidance.

Section 601 of the "Standard Specifications for Road and Bridge Construction" shall be used for determining the allowable stresses in falsework elements, allowable deflections, etc.

The reviewer should use the following general references in reviewing falsework drawings.

1995 AASHTO publication: "Guide Design Specifications for Bridge Temporary Works"

1995 AASHTO publication: "Construction Handbook for Bridge Temporary Works"

National Design Specification for Wood Construction (ANSI/NFoPA NDS-1991)

Design Values for Wood Construction (supplement to NDS)

California Falsework Manual

ACI "Formwork for Concrete" manual (Publication SP-4)

FHWA publication: "Guide Standard Specification for Bridge Temporary Works" (FHWA-RD-93-031)

Proprietary products shall be used in accordance with the manufacturer's instructions and recommendations. Any deviation from such instructions or recommendations must be approved in writing by the manufacturer and submitted with the drawings.

Unbalanced temporary loading, caused by the concrete placement sequence, shall be considered during the review of falsework drawings.

Special attention should be given to the horizontal bracing of falsework systems since a large number of failures have been attributed to inadequate horizontal bracing. Dead loads and the associated frictional forces developed shall not be used in the analysis for the resistance to horizontal loads.

Falsework adjacent to traffic openings shall be protected from the traffic by concrete barriers, guardrail, etc. See Falsework Traffic Openings section for special requirements.

A soil bearing a pressure of 3,000 psf will normally be considered acceptable for analysis of falsework mudsills when no soils testing data is available and the soil will be in a dry condition. The use of soil pressures greater than this value must be supported by soil tests per Division II, Section 3.2.2.2. of the AASHTO Standard Specifications for Highway Bridges. The soil under mudsills must be protected from saturation by providing adequate drainage, etc.

A bearing pressure of 5,000 psf will normally be considered acceptable for mudsills supported on asphaltic pavements. Bearing pressures exceeding this value shall not be used unless data is submitted that would justify the allowance of a higher stress.

Stay-in-place expanded metal meshes shall not be used to form construction joints in bridge decks. Metal meshes may be used in other portions of a bridge structure not directly exposed to moisture as long as two inches of concrete cover is provided over the edges of the mesh.

The use of overhang brackets which require welding or any other detrimental attachment method of the bracket to any portion of a steel girder or the shear steel (slab ties) of a concrete girder will not be allowed.

The drilling of holes into a concrete girder after fabrication of the girder shall not be allowed.

A bolt hole may be formed in the top flange of an exterior concrete girder to support an overhang falsework bracket as long as the hole is cast in the girder during fabrication and the girder working drawings are coordinated with the deck falsework working drawings.

Bridge deck overhang brackets, which bolt to the web of precast girders, may be used if both the following requirements are met:

1. The bolt hole or threaded insert is cast into the girder during fabrication of the girder.
2. The deck falsework working drawings are coordinated with the girder working drawings to ensure that the hole or insert spacing will work for the specific bracket being used and the loads being applied to the bracket.

The bottom slab, web walls and diaphragms of CIP box girder bridges shall be placed monolithically unless noted otherwise on the contract plans.

The slanted exterior girders of CIP box girder bridges shall be supported laterally by external bracing until the concrete deck has been placed and has attained at least 70 percent of it's required 28 day strength.

Cast-in-place box girder bridges supported on falsework systems containing a traffic opening should be designed for zero tension. The reviewer must check with the designer to be sure that the superstructure was designed for zero tension. This applies only to those portions of the superstructure falling within the post-tensioned frame

having the traffic opening. When the superstructure has been designed for zero tension, cracking of the bottom slab and girder webs during placement of the concrete deck is not critical and need not be analyzed.

However, the bottom slab and girder webs of CIP box girder bridges designed for concrete tensions greater than zero must not be allowed to crack during placement (loading) of the deck. Therefore, the falsework designer must analyze and ensure that cracking of the girder webs and bottom slab will not occur in such cases when the superstructure is being cast on conventional falsework. This is especially true at larger falsework spans such as at traffic openings.

Superstructures being cast on earthen falsework fills need not be checked for cracking.

The determination of falsework settlement/deflections and the proper adjustment of falsework grades shall be the responsibility of the Contractor and it's Professional Engineer.

For CIP, post-tensioned, box girder bridges containing hinges, the reviewer shall verify that the Contractor's falsework drawings include a method to adjust the superstructure elevation at the hinge. The adjustment may be required prior to the hinge closure pour to match the superstructure grades and provide a smooth ride. The project plans will give the dead load requirements for the adjustment locations. Adjustment methods such as jacking pits, jacking towers and counterweights may be used depending upon the superstructure falsework method. Also, the hinge must be designed to carry the additional span loading shifted to the hinge area during the post-tensioning process.

Falsework calculations submitted by the contractor are considered to be additional information for assisting in the review of the falsework drawings and therefore need not be approved. Any information or details shown in the calculations that are needed to construct the falsework properly shall be shown on the falsework drawings.

Red lined copies of the calculations may be returned to the contractor to identify where the errors were made. The Bridge Design Section's red lined office copies of the returned calculations shall be kept until the project is completed and a "Project Completion Notice" is received from Field Reports.

The Standard Specifications require that prior to concrete placement, the Contractor's Professional Engineer inspects the completed falsework and issues a properly signed and sealed certificate that the falsework has been constructed in accordance with the approved falsework drawings.

Falsework Traffic Openings

Falsework Requirements

To ensure that traffic handling is given proper consideration in the early design stages, it is necessary to identify traffic handling and falsework assumptions in the Bridge Selection Report. If falsework is to be used, the horizontal and vertical clearances shall be shown on the General Plan. Usually, one of the following listed conditions will prevail:

1. Traffic will be routed around construction site.
2. Traffic will pass through construction site.

    A. No falsework allowed over traffic. This restriction would require precast concrete or steel superstructure with field splices located clear of traffic.
    B. Stage construction required. Stage construction must be detailed on the plans. Construction joints or hinges would be required.
    C. Falsework openings required. The size and number of openings must be shown.

General discussions and a table of falsework openings are covered under "Falsework Clearances".

Falsework Use

When traffic must pass through the construction site, three possible conditions exist. Condition 2.A. is limited to sites which can be spanned by precast members or where steel is competitive in cost. The staged construction option of Condition 2.B. is not always feasible while the presence of a hinge is a permanent disadvantage. Condition 2.C. is used for all other cases when it is necessary to route traffic through the construction site. The elimination of permanent obstructions by using longer spans and eliminating shoulder piers will usually outweigh objections to the temporary inconvenience of falsework during construction.

Falsework Clearances

For cast-in-place structures, the preferred method of construction is to route traffic around the construction site and to use earth fills for falsework. This provides an economical solution, a safe working area and eliminates possible problems associated with the design, approval, construction and performance of falsework including the possible effect of excessive deflections of falsework on the structure.

When the street or highway must be kept open and detours are not feasible, falsework shall be used with openings through which traffic may pass. Because the width of traffic openings through falsework can significantly affect costs, special care should be given to minimizing opening widths consistent with traffic and safety considerations. The following should be considered:

1. Staging and traffic handling requirements.
2. The width of approach roadway that will exist at the time the bridge is constructed.
3. Traffic volumes and percentage of trucks.
4. Vehicular design speed.
5. Desires of local agencies.
6. Controls in the form of existing facilities.
7. The practical problems of falsework construction.
8. Consideration for pedestrian requirements.

The minimum width of traffic openings through falsework for various lane and shoulder requirements shall be as shown in Table 1. The resulting falsework span shown in Table 1 is the minimum span. When temporary concrete barrier is used, two feet of safety margin per side is allowed for deflection. When blocked-out "W" beam is used, four feet of safety margin per side is allowed for deflection. Refer to Figure 1. The normal spans may be reduced or increased if other forms of protection are used depending on the required space for installation and deflection. The actual width of traffic openings through falsework and the resulting falsework span to be used in design shall be determined by Traffic Design Section and shall be stated in the Bridge Selection Report.

To establish the grade line of a structure spanning an existing street or highway, allowance must be made for depth of falsework, where used, to provide the clearance needed to permit traffic through the work area during construction. The minimum allowances to be made for depth of falsework shall be as shown in Table 2 and shall be based on the actual falsework openings determined by Traffic Design Section.

The minimum vertical clearance for falsework over freeways shall be 14 feet 6 inches.

Where the vertical falsework clearance is less than 15 feet, advance warning devices shall be specified or shown on the plans. Such devices may consist of flashing lights, overhead signs, over-height detectors or a combination of these or other devices. Providing for these devices in the specifications or on the plans shall be the responsibility of Traffic Design Section.

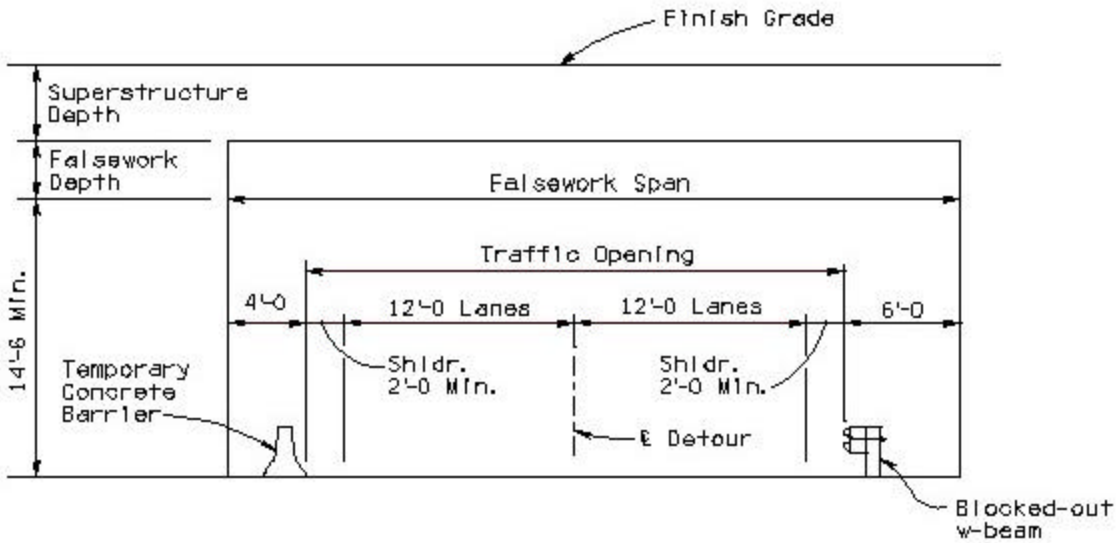

FIGURE 1

TYPICAL FALSEWORK OPENING

NOTE:
Special consideration shall be given to limit the maximum allowable tension in a precompressed tensile zone of post-tensioned box girder bridges supported on falsework with large openings.

	Detour Roadway		Minimum Width	Resulting Falsework Span (1)	
Facility to be spanned	No. Lanes	Shoulder Widths	of Traffic Opening (1)	Temporary Conc. Barrier	Blocked-out "W" beam
Freeway & Non-Freeway	1	2' & 2'	16'	24'	28'
	2	2' & 2'	28'	36'	40'
	3	2' & 2'	40'	48'	52'
	4	2' & 2'	52'	60'	64'

TABLE 1

FALSEWORK SPAN REQUIREMENTS

NOTE: Traffic Opening and Falsework Span are measured normal to detour centerline.

Min. Required Falsework Depth \ Falsework Opening	24	28	36	40	48	52	60	64
Max 2300 lb / ft DL per girder line	1'-7	1'-8	1'-11	2'-8	3'-0	3'-6	3'-7	3'-9
2300 - 3100 lb / ft DL per girder line	1'-8	1'-10	2'-8	2'-11	3'-6	3'-8	3'-9	3'-10

TABLE 2

FALSEWORK DEPTH REQUIREMENTS

NOTES:

(1) DL based on 160 pcf concrete.

(2) Table 2 is based on the superstructure concrete being designed for zero tensile stress at the falsework openings. Superstructures designed with concrete tensile stresses can significantly increase the required falsework depths shown in the table and amount of falsework required.

(3) Structures with greater than 3100 lb / ft Dead Load per girder line will require special considerations for required falsework depths.

Forming Plans for Cast-In -Place Concrete

Refer to Sections 601-3.02 of the Standard Specifications and the ADOT Construction Manual for specific guidance. Submittal of formwork drawings and calculations are normally not required unless requested by the bridge designer for unusual applications.

Formwork drawings and calculations are required for the cast-in-place girders (webs) on box girder bridges. These drawings shall go through the same submittal and review process as falsework drawings. Formwork drawings are intended to assist the Contractor in developing a well thought-out plan and avoid unforeseen problems during the concrete pours of these very important (and difficult to repair) bridge members. As in the case of falsework drawings, reproducible and permanent retention will not be required.

Precast Girder Details

The working drawings should also include the "Fabrication Details". These details describe how the girders will be fabricated (i.e. placing and curing of concrete, jacking and releasing of

the strands, etc.) and should also include calculations for the elongation of the strands during the jacking process.

Concrete mix designs that may accompany the "Fabrication Details" should be forwarded to the Structural Materials Engineer in the Materials Group for review and approval.

Strand hold-downs may vary horizontally plus or minus 10 inches from the points shown on the contract drawings.

The Bridge Design Engineer shall send two (2) sets of approved precast girder details to the Structural Materials Engineer in the Materials Group for use in field inspection.

Reproducible drawings and permanent retention will not be required.

Structural Steel Fabrication Drawings

Refer to Section 604 of the Standard Specifications and the ADOT Construction Manual for specific guidance. Reproducible drawings and permanent retention normally will not be required. For atypical structures, provisions for permanent retention should be specified in the project Special Provisions.

There are several possible scenarios regarding structural steel designs and the interrelationship of design, working drawing review and in-shop structural steel inspection. They are as follows:

1. In-house Designs --- working drawing review is provided by in-house staff and the steel inspection is provided by the ADOT on-call inspection agency.

2. In-house Designs --- working drawing review is provided by in-house staff and the steel inspection is provided by an ADOT selected inspection agency under a special contract that is project specific.

3. Consultant Designs --- working drawing review is provided by the consultant designer and the steel inspection is provided by the ADOT on-call inspection agency

4. Consultant Designs --- working drawing review is provided the consultant designer and the steel inspection is provided by a consultant selected inspection agency under a special contract that is project specific.

Generally, a special inspection contract will be negotiated for structural steel inspection on large to very large fabrication projects, especially if the steel is to be fabricated out-of-state. The specific circumstances of the project and the availability of the ADOT on-call inspection agency will be the deciding factor.

The "Project Liaison Notice" should designate who has the responsibility of providing for shop inspection of the structural steel.

The Bridge Design Sections will provide for in-shop structural steel inspection except on large fabrication projects designed by consultants and as noted herein. The inspection will be provided through the use of a certified steel inspection agency under contract with ADOT.

The ADOT Standard Specifications Section 105.03 describes the time allowed for the review of working drawings. This time does not include the time drawings are being revised by the contractor. The time period begins each time the contractor submits the original drawings or revised drawings to the Resident Engineer. In the spirit of "partnering", the Bridge Project Engineer can usually commit to a review period of (2) weeks or less if the project is not complex.

Steel Girder Details

Shop welded splices in steel girders will not be allowed unless permitted by the plans and specifications. When permitted, the locations of the welded shop splices and welding procedures for the splices must be shown on the working drawings.

Transverse welds in tension flanges will not be permitted.

Transverse welds across the ends of steel girder cover plates will not be permitted.

A separate inspection contract will generally be negotiated by the Bridge Design Section (with the assistance of Engineering Consultant Services) for out-of state fabrications (except for small jobs) or large in-state fabrications. If the girders are designed by a consultant, the consultant should negotiate and monitor the contract. (see Project Liaison Notice)

Structural Steel Shop Inspection Procedures

Notification of Inspection

The Bridge Project Engineer assigned to the project shall verbally notify ADOT's on-call Inspection Agency of the need for shop inspection services when the first working drawing submittal is received by the Bridge Design Section for review and approval. The Inspection Agency shall be given the name, address and telephone number of the fabricator at this time so that the Inspection Agency can contact the fabricator and make arrangements for the shop inspection. When the design, review and approval of the working drawings are done by a design consultant, the Resident Engineer should be asked to supply the fabricator information to the Bridge Project Engineer at least two (2) weeks in advance of the need for shop inspection.

The verbal notification shall be followed up in writing by the Bridge Project Engineer as soon as the working drawings are approved or when approved working drawings are received from the design consultant. This written notification should include the standard notification letter, a copy of the working drawings, and appropriate sections of the special provisions and contract plans. When the inspection is for high-load multi-rotational bearings (pot, disc and spherical), the approved load testing requirements shall be included with the notification letter. A copy of the notification letter shall be sent to the Resident Engineer and ECS Coordinator.

Required Inspection Documents

The inspection documents shall include the following:

1. Certificates of Compliance
2. Material Certifications (includes heat reports, charpy test reports, etc.)
3. Welder Qualifications
4. Copy of Certificate(s) for Contractor's Quality Control Personnel
5. Welding Procedures
6. Welding Rod and/or Wire Certifications
7. Reports from the Inspection Agency:
   -Inspection Reports (progress reports)
   These reports should indicate what was inspected and the results of the inspection, hours of inspection, hours of travel, etc.
   - Radiographic (x-ray) Reports and X-ray Film
   -Ultrasonic Test Reports
   -Magnetic Particle Test Reports

The Inspection Agency should collect only one (1) of the three (3) original certificates of compliance from the fabricator for the Bridge Design Section project file. The remaining two (2) certificates of Compliance should be left with the fabricator for delivery to the Resident Engineer through the general contractor.

The material certifications shall be checked against the working drawings, standard details or contract plans to ensure that all the required material certifications have been received from the Inspection Agency.

Review of Inspection Invoices

The invoice shall include the hours of inspection, hours of travel, air fare and hotel charges along with receipts, amount of x-ray film used, pounds of flux powder used, etc. The number of units charged on the invoice shall agree with the number of units shown on the inspection reports.

The number of units charged on the invoice should then be multiplied by the prices given in the Steel Inspection Contract to arrive at the total costs for services rendered.

After the Bridge Project Engineer has determined that all the required inspection documents have been received for the inspection work covered by the invoices and that the invoices are correct, the Engineer shall then sign and date the "Individual Project" payment report for each project. The signed "Individual Project" payment reports should then be given to the Project Monitor in Design Section "B".

The Project Monitor will then review the "Master Projects" payment report for correctness, sign and date the "Master Projects" payment report and send it along with the invoices to Engineering Consultant Services. A copy of the "Master Projects" payment report will be given to the Bridge Design Leaders for distribution to the Bridge Project Engineers within their design sections who are assigned to the projects.

Completion of Inspection

At the completion of fabrication, the Inspection Agency should state on the inspection report that it is the final report and fabrication and inspection is complete.

At the completion of fabrication and inspection, the Bridge Project Engineer shall send copies of all the inspection documents to the Resident Engineer. In addition, copies of the material certifications and all other materials related documentation shall be sent to the Assistant State Engineer of the Materials Group for their files.

Post-tensioning Details

Refer to Section 602 of the Standard Specifications and the ADOT Construction Manual for specific guidance.

Anchorage devices shall meet the requirements of AASHTO Standard Specifications, Division I, Article 9.21.7.2. Special anchorage devices not meeting the specification may be acceptable if tested by an independent testing agency which is acceptable to the Bridge Design Engineer. The testing procedures shall be in accordance with AASHTO Standard Specifications, Division II, Article 10.3.2. This requirement supersedes the 1990 ADOT Standard Specification Section 602-3.02 and should be included with the project Special Provisions.

Post-tensioning systems which have been tested and approved by the California Department of Transportation (Caltrans), will be considered an acceptable alternate to the AASHTO testing criteria. A copy of the approval letter from the Caltrans "Division of New Technology and

Research", including any details associated with the approval, shall be submitted with the shop drawings by the post-tensioning company.

General Zone and Local Zone reinforcing requirements shall be reviewed by the Bridge Design Engineer to ensure that the original design assumptions are reflected by the post-tensioning working drawings. If the post-tensioning components shown on the working drawings are different from the original design assumptions, a change order may be required to revise the general zone and/or local zone reinforcing details to meet the requirements of AASHTO Standard Specifications, Division I, Article 9.21.2.

The duct LOL (Lay Out Line) dimensions should be accurately shown on the working drawing to within 1/8 inch of the theoretical dimension. The LOL dimensions are typically measured from the bottom of the superstructure (soffit) to the bottom of the duct. Spacing of the LOL dimensions along the tendon paths should not exceed 15 feet in order to provide adequate field layout control.

The Bridge Design Engineer shall send two (2) sets of approved post-tensioning details to the Structural Materials Engineer in the Materials Group for use in field inspection.

Sign Structure Details

Shop inspection will be provided by the appropriate Bridge Design Section on-call inspection agency for the fabrication of all truss and tubular sign structures except where a large number of signs are being fabricated out-of -state on projects designed by consultants. In such cases, the Consultant should negotiate and monitor a separate inspection contract for the project. (see Project Liaison Notice)

Review and approval of sign structure working drawings will be performed by the design consultant on projects having a large number of standard sign structures and designed by the consultant. Generally, working drawings for consultant designed projects with only two or three sign structures or projects that have been designed in-house will be reviewed and approved by the appropriate Bridge Design Section. (see Project Liaison Notice)

The Bridge Design Section is not responsible for working drawing reviews or steel inspections on tapered tube or ground mounted sign structures (i.e. breakaway signs). Those are the responsibility of the Traffic Design Sections located in the Traffic Group.

For signs placed on new highway sections, column lengths shall be based on the foundation elevations called for in the contract drawings and the working drawing column lengths approved accordingly. The new embankment slopes will be graded to match the foundation elevations per Subsection 606-3.01 of the Standard Specifications.

For signs placed on existing highway sections, a field survey of the new foundation elevation and verification of column lengths by the Traffic Group may be required. This will occur when the project does not include a contract item for grading slopes.

Shop inspection of in-house and consultant designed bridge sign mounts (mounts used to install signs on traffic bridges) will be provided by the Bridge Design Section on-call inspection agency.

Expansion Joint Details

Aluminum expansion joints of any type will not be allowed.

The top surface of the compression seal shall be located between ¼ and 3/8 inches below the top surface of the joint angles per the B-24.20 standard drawing. This will provide space between the bottom surface of the seal and the top surface of the "g" bars so that the seal can bulge downward when being compressed.

Shop inspection for expansion joints will not be provided by the Bridge Design Section on-call inspection agency unless they are fabricated at the same shop as other items requiring shop inspection on the same project. Shop inspection of the other items must have also been provided for by the Bridge Design Section on-call inspection agency. Expansion joints not inspected at the shop should be inspected by field personnel prior to installation.

Bearing Details

Working drawings for bearing pads and neoprene strip type bearings will generally not be reviewed by the Bridge Design Section except for in-house designs when specifically requested by the Resident Engineer.

Working drawings and load testing requirements for high-load multi-rotational bearings (pot, disc and spherical bearings) and any specially designed sliding bearings will be reviewed and approved by the Bridge Design Engineer.

Load testing of high-load multi-rotational bearings (pot, disc and spherical bearings) shall be witnessed by ADOT'S on-call Inspection Agency on all in-house designs and consultant designs with few tests. The consultant shall make arrangements with a private testing firm for witnessing of the load tests on consultant designs which contain a large number of bearing tests. A final report shall then be written by the Inspection Agency regarding the results of the witnessed load testing and submitted to the Bridge Design Engineer for approval and then to the appropriate Bridge Design Section for payment of services. Refer to the latest applicable project for an example of procedures and report requirements.

In addition to the usual notification letter, the final report requirements, approved load testing procedures, approved working drawings, copies of the specifications and plans, and all other applicable documents shall be sent to the on-call Inspection Agency for their use in implementing this procedure.

Bridge Traffic Railing and Pedestrian Railing Details

Working drawings for bridge traffic railing and pedestrian railing will be reviewed and approved by the appropriate Bridge Design Section for both in-house and consultant designs. Generally, bridge traffic railing and pedestrian railing are in-house standard designs or retrofits for existing bridges.

Shop inspection of bridge traffic railing will be provided for by the Bridge Design Section on-call Inspection Agency. Shop inspection for bridge pedestrian railing will not be required.

Change Orders, Force Accounts and Fiscal Variance Reports

The Bridge Design Section's copy of all change orders, force accounts and fiscal variance reports shall be placed in the project file.

A copy of any detail drawings that may be associated with a change order shall also be attached to the contract plans (rack set).

An office memo to the Resident Engineer will be required to initiate change order or force account, A transmittal letter or E-mail is not acceptable. The memo shall state the reason for the design change and request a copy of the executed change order or force account. If plans or details are being provided, ten (10) copies shall be provided with the memo.

Drawings or details for change orders are required to be sealed.

Change orders initiated by consultants and others shall be reviewed by the Bridge Project Engineer, and approved by the State Bridge Engineer.

Field Engineering

At the request of the Resident Engineer, the Bridge Project Engineer shall provide the Resident Engineer with field assistance on construction problems involving structures.

Arrangements for field contacts shall be made with the Resident Engineer in advance. The Bridge Project Engineer or designated representative should meet with the Resident Engineer or designated representative upon arrival at the construction site and assist in the resolution of the construction problem.

The Bridge Project Engineer shall not direct the contractor at any time. Recommendations or advisement concerning construction shall be made to the Resident Engineer or designated representative only.

The Bridge Project Engineer and/or designated team members should visit the work site of major bridge construction projects at specified milestones such as foundation pour, girder placement, deck pour, etc. according to the bridge type. The Bridge Project Engineer shall coordinate/schedule the visits with the Resident Engineer.

ADOT personnel shall wear a hard hat and safety vest while at the construction site. Personal safety should be observed at all times especially when around construction equipment.

Solutions to construction problems that will result in a change from the original design plans will require approval from the Bridge Design Engineer and shall be discussed with the Section's Bridge Design Leader. The Arizona Board of Technical Registration Rule R4-30-304 requires that the Design Engineer's seal and signature appear on drawings, details or calculations that modify the original design bearing his/her seal.

The Bridge Project Engineer is responsible for resolving field problems on all in-house designs shown in the contract drawings as well as problems associated with details in the "Bridge Group Standard Drawings". NOTE: Bridge Group is not responsible for tapered tube or ground mounted signs. Working drawings for tapered tube or ground mounted signs shall be forwarded to Traffic Group for review and the Resident Engineer so notified.

The Bridge Design Sections will play an advisory role in construction problems that affect the designs of consultants and therefore such construction problems should be referred to the consultant. However, it should be kept in mind that ADOT is the owner of the structure(s) and will have final responsibility for the integrity and maintenance of the structure(s). Therefore, it is the responsibility of the Bridge Design Sections to participate in the problem solving process to arrive at a consensus. For this reason, a copy of the consultant's solutions to such problems must be transmitted to the assigned Bridge Design Section in an expeditious manner. In addition, the Bridge Design Sections may be required to make the final decision in situations where the consultant and contractor can not agree on a timely solution to the problem.

In general, the Bridge Design Sections will provide assistance to Resident Engineers on construction problems of a structural nature.

Value Engineering Proposals

The Bridge Design Sections will participate in the review of Value Engineering Proposals submitted to the Resident Engineer if the proposal is structural in nature or may affect a structure. Participants should include the Design Section Leader, the Bridge Project Engineer, and the Bridge Designer.

Proposals to change the basic design of a bridge will not be considered. Savings solely from the elimination or reduction of a bid item will not be considered as a Value Engineering Proposal.

Accurate time records shall be maintained for all Value Engineering Proposal reviews. If the Value Engineering Proposal is accepted, the cost for review and investigation of the Proposal as well as subsequent costs that may be realized by the Bridge Designer will be deducted from the estimated savings. If the Proposal is rejected, the costs associated with the review will be shared between the Contractor and the Department. The District is responsible for preparing the necessary Change Order and determining the final net savings or costs that will be split between the Contractor and the Department.

The hourly rate(s) for review will be set by the Bridge Project Engineer.

BRIDGE CONSTRUCTION OVERLOAD POLICY

General Provisions

When economics, safety or other reasons dictate that overload vehicles be allowed to haul excavation or borrow over bridge structures during construction, the affected bridges shall be designed in accordance with the criteria contained in this policy statement. As with all design criteria, good engineering judgment must be used in applying the criteria to the unique aspects of each project.

The decision to design structures for construction overloads must be made early in the project development. Details should be included with the Bridge Selection Report. To justify such action, there must be sufficient savings identified to offset the increased cost in constructing the bridges to withstand these heavier loads. A proposed scheme for hauling must be developed including identification of affected structures, identification of design load type, location of haul and return lines and identification of the method of lane delineation (use of concrete barriers). The decision to design bridges for construction overloads and the identification of the hauling scheme details must be made prior to initiation of any final bridge design. Where feasible, haul roads should be located such that the strengthened portion of the bridge will benefit future traffic.

The bridge designer must also identity whether temporary or permanent approach slabs are to be used and the method of dealing with joints and bearings.

Construction plans shall show the axle reactions of the design overload vehicle, the overload design criteria and the location of haul lanes and details. Construction overloads different than those shown on the plans will be allowed, provided they do not produce a more critical load than that produced by the specified design overload. The plans or special provisions should indicate the any vehicle may be used, provided the induced moments and shears are not greater than that of the design overload. It should be further stated that it is the contractor's responsibility to evaluate and make his own determination as to the acceptability of such a vehicle during the bidding process. The low bidder shall submit his proposed vehicle for approval by the Engineer.

Design Overloads

Two types of design overload vehicles are available. For projects involving major earthwork hauls where use of special overload trucks would be economical, the bridge structures shall be designed for the Load I overload as shown in Figure 1. For projects with large internal hauls where use of scrapers is anticipated, the bridge structures shall be designed for the Load II overload as shown in Figure 2. All bridges designed for construction overloads shall also be designed for the HS20-44 truck and/or the alternate military loading as required in accordance with Bridge Group design policy with the more critical loading controlling the design.

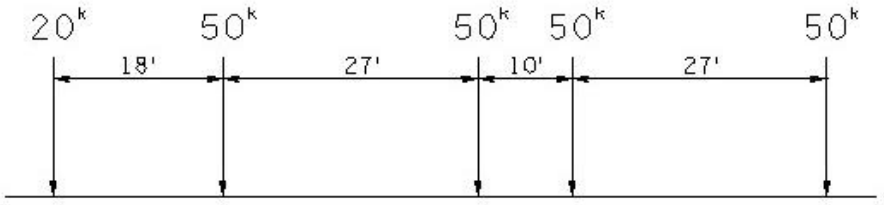

FIGURE 1
LOAD I OVERLOAD

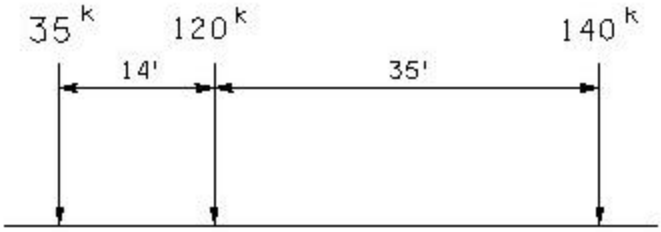

FIGURE 2
LOAD II OVERLOAD

Wearing Surfaces

The 25 psf future overlay should not be included in analyzing for overloads.

The usual procedure of treating the top ½ inch of the deck as a wearing surface is waived for design of construction overloads.

Deck Design

Bridge decks shall be designed for the following criteria:

	HS20-44/Alt Milt	Load I	Load II
Transverse reinf.	Grade 60 fs = 20 ksi	Grade 60 fs = 24 ksi	Grade 60 fs = 24 ksi
Concrete Min.	f'c=4500 psi	f'c=4500 psi	f'c=4500 psi
Max.	fc =1400 psi	fc =1800 psi	fc =1800 psi
Impact	30%	30%	50%

The deck shall also be designed for the dead load of temporary barriers. The deck shall have the same thickness across the entire width of the deck but the reinforcing may vary.

Superstructure Design

Individual girders for prestressed concrete bridges shall be designed for the following criteria:

	HS20-44/Alt Milt	Load I	Load II
Impact	AASHTO	30%	30%
Allowable Tension	(Prestressed concrete)		
DL + P/S	0	0	0
DL + ILL + I + P/S	$3\sqrt{f'c}$	$6\sqrt{f'c}$	$6\sqrt{f'c}$

Prestressed concrete bridges shall be designed for overloads on an individual girder basis, with each girder designed for the appropriate distributed live load. The composite dead load due to temporary barriers may be distributed equally to all girders under the haul lane. The girder spacing for post-tensioned box girder bridges shall be uniform across the width of the structure with the specified jacking force equal for all girders. The girder spacing for prestressed concrete girder bridges may vary across the width of the structure with closer girder spacings

allowed in the region of the haul lanes. However, all girders in the bridge shall have the same design (i.e. same prestressing force and center of gravity).

Distribution of wheel loads for typical prestressed concrete bridges with maximum girder spacings less than 10 feet, shall be as contained in AASHTO Article 3.23 using the column in Table 3.23.1 for One Traffic Lane.

Haul lanes shall be located on the bridge so that construction overloads will not become the critical load for the design of exterior girders.

The special provisions shall prohibit more than one loaded overload vehicle on a bridge at a time.

In addition to the Working Strength Design Method criteria of AASHTO, prestressed concrete overload bridges shall also be designed to meet the ultimate moment capacity requirements of the Load Factor Design Method. Individual girders shall be designed using the same live load wheel distribution for ultimate strength as was used for working stress.

Shear for prestressed concrete girders shall be designed using the Load Factor Design Method in accordance with the provisions of the 1979 AASHTO Interim Specifications.

In calculating the ultimate moment and shear, the following factored load shall be used: 1.3 (DL + 5/3 (LL + I)).

For concrete structures designed for the Load I overload, a single 12 inch thick diaphragm shall be placed at the midspan for spans up to 80 feet, and 12 inch thick diaphragms shall be placed at the quarter points for spans over 80 feet. For concrete structures designed for the Load II overload, 12 inch thick diaphragms shall be placed at the quarter points.

Design criteria for steel girder superstructures must be developed on a project specific basis. The designer shall develop the criteria consistent with the intent of this policy and submit for approval prior to design.

Substructure Design

Substructure units, including bearings, pier caps, columns and footings, shall be checked for the effects of the design overload vehicle. Normal methods of live load distribution with no provisions for additional allowable overstresses should be used.

Specifications

The following specifications should be added to the Special Provisions.

The Contractor may use any construction overload vehicle to haul excavation or borrow across the designated bridges provided the induced moments and shears are not greater than those of the design overload. It shall be the responsibility of the Contractor to evaluate and make his own determination as to the acceptability of such a vehicle during the bidding process. The Contractor shall submit his proposed vehicle for approval by the Engineer.

Overload bridges have been designed assuming only one loaded overload vehicle will be on the bridge at a time. It shall be the responsibility of the contractor to develop a plan to enforce this requirement and submit to the Engineer for approval.

CONSTRUCTION JOINT GUIDELINES

General Provisions

The type of structure and method of construction, combined with sound engineering judgment, should be used in determining the number and location of superstructure construction joints. The use of construction joints should be minimized for ease of construction and subsequent cost savings. Some items which should be considered are:

1. Method of construction - earthen fill falsework, conventional falsework or girder bridge without falsework.
2. Phase construction because of physical constraints such as traffic handling.
3. Span length and estimated rotation and deflection.
4. Degree of fixity at abutments and piers.
5. Effects of locating a construction joint in a region of negative moment.
6. Volume of concrete to be poured without a joint
7. Consequences of continuous pour, including adverse effects caused by a breakdown during the pour.

Reference is made to the ADOT Standard Specifications for Road and Bridge Construction, Subsection 601-3.03 Placing Concrete and Subsection 601-3.04 Joints in Major Structures. Some important requirements regarding construction joints contained in the Standard Specifications are as follows:

1. The sequence of concrete placement shall be as shown on the project plans or as approved by the Engineer when not show on the project plans.

2. The rate of concrete placement and consolidation shall be such that the formation of cold joints within monolithic sections of any structure will not occur.

3. The rate of concrete placement for major structures shall not be less than 35 cubic yards per hour unless otherwise specified or approved in writing by the Engineer.

4. Placement of the deck concrete shall be in accordance with the placing sequence shown on the project plans.

5. The Contractor shall submit drawings showing the placement sequence, construction joint locations, directions of the concrete placement and any other pertinent data to the Engineer for his review. The drawings shall be submitted at least four weeks prior to the date of deck placement.

6. Construction joints shall be placed in the locations shown on the project plans or as approved by the Engineer.

7. All construction joints shall be perpendicular to the principal lines of stress and in general located at points of minimum shear and moment.

Longitudinal Construction Joints

Longitudinal construction joints in bridge decks and/or superstructures should be identified as optional unless required by construction phasing. The optional deck joints should be placed on lane lines or at center of structure. All longitudinal construction joints should be keyed.

Precast Concrete Girder Bridges

Precast concrete girder bridges made continuous over supports shall have transverse construction joints placed so that the girders undergo their positive moment deflections prior to the final pour over the negative moment areas of the fixed piers or abutments. There shall be no horizontal construction joint between fixed pier diaphragm or fixed abutment diaphragm and the deck.

Girder bridges will usually require details on the plans showing a plan view with joint locations, deck pour sequence and direction of pour, if required. There should be a minimum of 12 hours between adjacent pours. Construction joints where required should be parallel to the centerline of the pier. Their location will be near the point of minimum dead load plus live load moment and shear. This distance is generally one-quarter of the span length from the pier if the adjacent

spans are approximately equal length. Following is a typical example of a deck pour schedule with notes for a typical precast concrete girder bridge with expansion seat-type abutments:

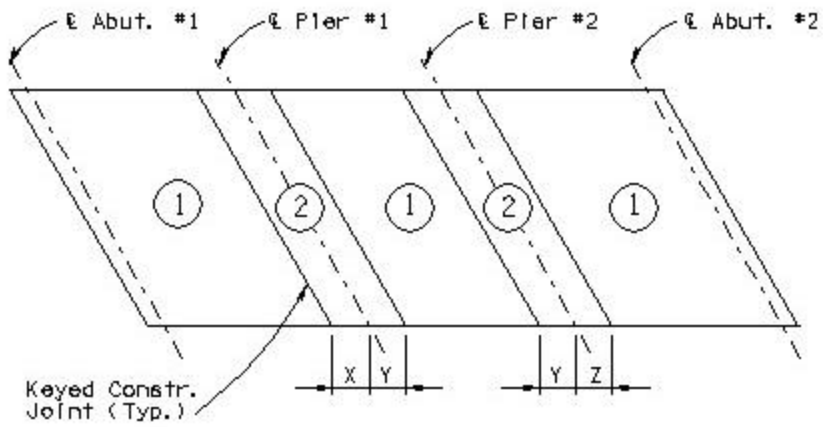

DECK POUR SCHEDULE
(Precast Concrete Girder)

POUR NOTES:

1. Numbers ① & ② indicate placing sequence of deck concrete. Pour ② sections a minimum of 12 hours after adjacent ① sections have been poured.
2. Intermediate diaphragms, expansion pier diaphragms and expansion abutment diaphragms shall be poured prior the deck pour.
3. Fixed pier and fixed abutment diaphragms shall be poured concurrent with the deck pour.
4. Sections ① and ② may be poured consecutively but only in the direction from ① to ② and a minimum of 12 hours after the adjacent ① section has been poured.
5. The Contractor shall submit a Deck Pour Schedule to the Engineer for approval prior to placing concrete.

Steel Girder Bridges

The effects of uplift and allowing a continuous pour should be considered when developing deck pour schedules for multi-span continuous steel girder bridges. The required rate of pour should be compared to the quantity of concrete to be placed and the potential for poured sections to set up and develop tensile stresses from pours in adjacent spans shall be considered when determining the need for construction joints. Consideration must be given to the potential for negative moment stresses in the deck due to placement of positive moment pours in adjacent spans.

Girder bridges will usually require details on the plans showing a plan view with joint locations, deck pour sequence and direction of pour, if required. Except where otherwise required, there should be a minimum of 12 hours between adjacent pours. Construction joints, where required, should be parallel to the centerline of the pier. Their location should be near the point of dead load counterflexure. Following is a typical example of a deck pour schedule with notes for a typical steel girder bridge with expansion seat-type abutments:

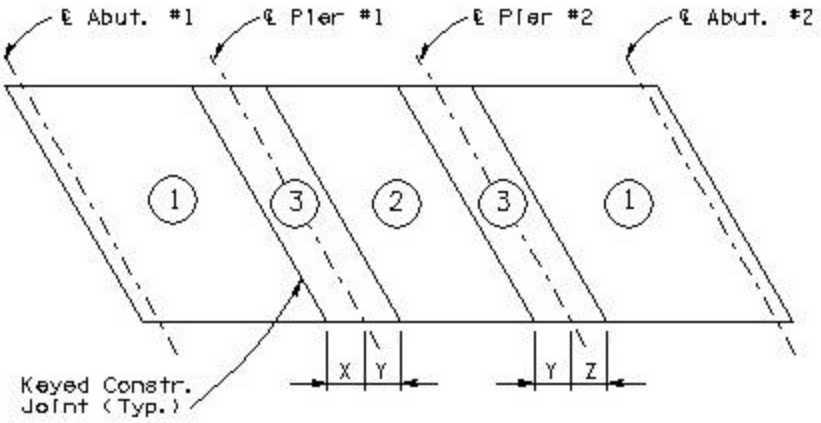

DECK POUR SCHEDULE
(Steel Girder)

POUR NOTES:

1. Numbers ①, ② & ③ indicate placing sequence of deck concrete. Pour ② sections a minimum of 48 hours after ① sections have been poured. Pour ③ sections a minimum of 12 hours after adjacent ①& ② sections have been poured.
2. As an alternate, ① and ② sections may be poured consecutively in sequence in one direction only. The rate of pour shall be such that each new section shall be poured before the previously poured adjacent section has set.
3. Sections ② and ③ may be poured consecutively but only in the direction from② and ③ and a minimum of 48 hours after the adjacent ① section has been poured.
5. The Contractor shall submit a Deck Pour Schedule to the Engineer for approval prior to placing concrete.

Cast-In-Place Box Girder Bridges

Box girder bridges made continuous over supports shall have transverse construction joints placed so that the webs undergo their positive moment falsework deflections prior to the final pour over the negative moment areas of the fixed piers or abutments if the superstructure

formwork is supported on conventional falsework. The transverse construction joints may be omitted if the superstructure formwork is supported on earthen fill. The webs and all diaphragms should be poured concurrently with the bottom slab. Transverse construction joints where required should be parallel to the centerline of the pier. Their location near the inflection point is generally one-quarter of the span length from the pier if the adjacent spans are approximately equal length.

Following is a typical example of required details and notes for a cast-in-place box girder bridge with integral fixed piers and expansion seat-type abutments.

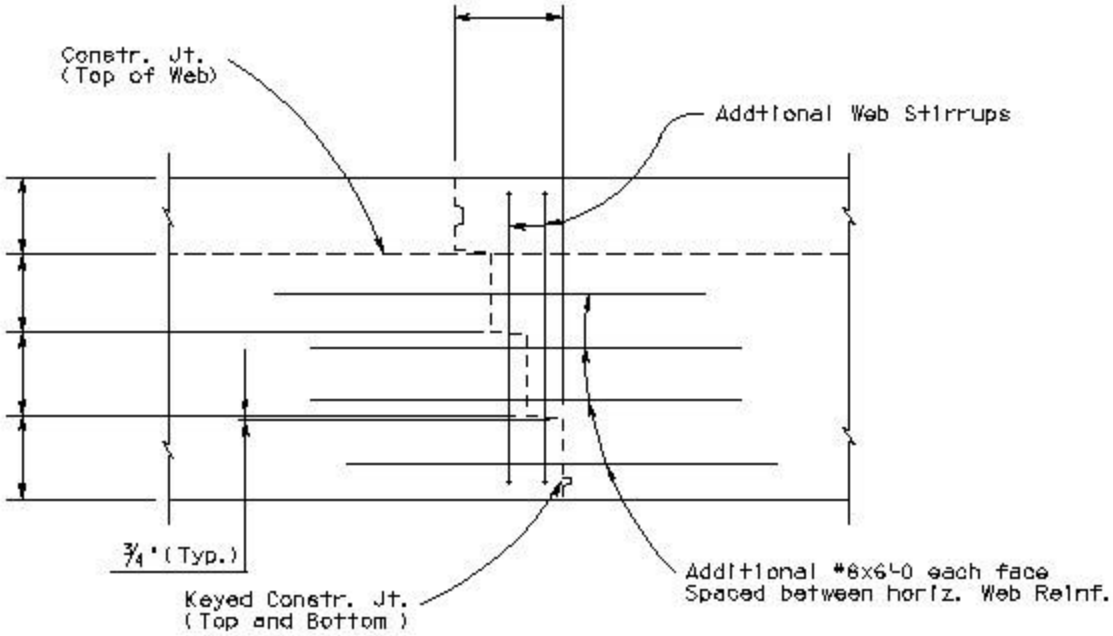

WEB CONSTRUCTION JOINT DETAIL

NOTE: Web stirrups shown in above detail are in addition to the web stirrups spacing shown on sheet ____ of ____. Adjust spacings as required to maintain minimum clearances for concrete placement and vibration.

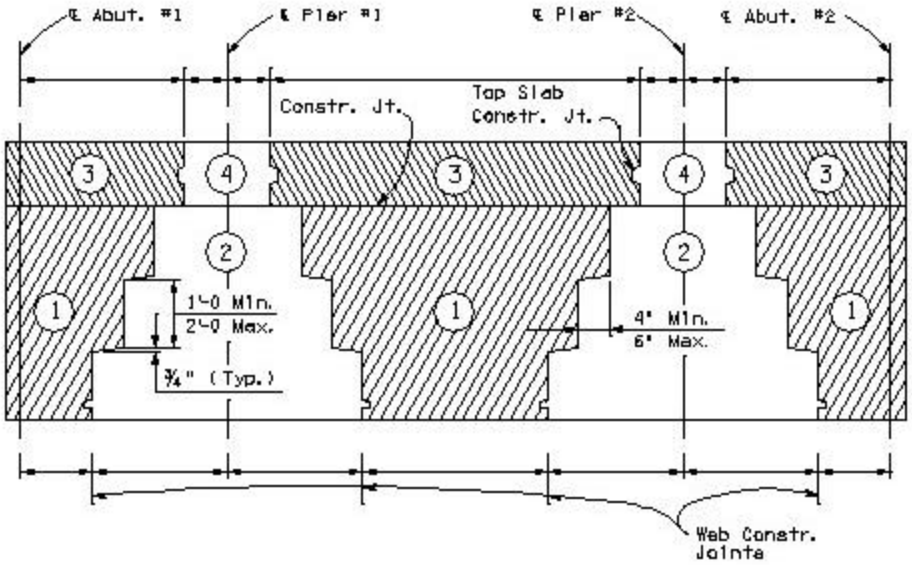

POUR SCHEDULE

Pour Notes:

1. Numbers ① & ② indicate placing sequence of bottom slab, girder web and diaphragm concrete.
2. Numbers ③ and ④ indicate placing sequence of top slab.
3. There shall be 12 hour minimum interval between adjacent pours.
4. Sections ③ and ④ may be poured consecutively but only in the direction from ③ to ④ and a minimum of 12 hours after the adjacent ③ section has been poured.
5. For bridges constructed on earth fill, the web and top slab construction joints are optional.
6. The Contractor shall submit a Pour Schedule to the Engineer for approval prior to placing concrete.

Structure Detail Drawings - Railings

SD Drawing Number	Description	View SD Drawing	Download DGN (Zip) File
SD 1.01	32 Inch F-Shape Bridge Concrete Barrier and Transition	sd101 (145k)	sd101 (83k)
SD 1.02	42 Inch F-Shape Bridge Concrete Barrier and Transition	sd102 (145k)	sd102 (82k)
SD 1.03	Thrie Beam Guard Rail Transition System	sd103 (109k)	sd103 (69k)
SD 1.04	Combination Pedestrian - Traffic Bridge Railing	sd104 (140k)	sd104 (65k)
SD 1.05	Pedestrian Fence For Bridge Railing SD 1.04	sd105 (134k)	sd105 (54k)
SD 1.06	Two Tube Bridge Rail (1 of 4)	sd106a (140k)	sd106a (88k)
SD 1.06	Two Tube Bridge Rail (2 of 4)	sd106b (54k)	sd106b (54k)
SD 1.06	Two Tube Bridge Rail (3 of 4)	sd106c (68k)	sd106c (59k)
SD 1.06	Two Tube Bridge Rail (4 of 4)	sd106d (64k)	sd106d (50k)
SD 1.11	Barrier Junction Box	sd111 (106k)	sd111 (284k)

The method of measurement and bid item numbers for the bridge railings described above and the accompanying transitions are summarized as follows:

Bid Item Number	Description	SD Drawing	Method of Measurement

6011130	32 Inch F-Shape Bridge Concrete Barrier and Transition	SD 1.01	Linear Foot
6011131	42 Inch F-Shape Bridge Concrete Barrier and Transition	SD 1.02	Linear Foot
9050430	Thrie Beam Guard Rail Transition System	SD 1.03	Each
6011132	Combination Pedestrian - Traffic Bridge Railing	SD 1.04	Linear Foot
6011133	Pedestrian Fence For Bridge Railing SD 1.04	SD 1.05	Linear Foot
6011134	Two Tube Bridge Rail	SD 1.06	Linear Foot
7320475	Barrier Junction Box Type I	SD 1.11	Each
7320476	Barrier Junction Box Type II	SD 1.11	Each

Documents provided in PDF format will require Adobe Acrobat Reader to view.
Compressed documents provided in ZIP format will require Winzip to view.

Privacy Statement | Contact ADOT
© Copyright Arizona Department of Transportation All Rights Reserved

Bridge Bulletins
Bridge Practice Guidelines
Bridge Preservation Program
Structure Detail Drawings
CADD - Microstation
Gallery of Arizona Bridges
Job Opportunities
Staff
Bridge Group Home Page

az511

Adopt a Highway Program

Traffic Structures

Median Sign Structure (One Sided)

SD Drawing Number	Description	View SD Drawing	Download DGN (Zip) File
SD 9.02	Median Sign Structure (One Sided) Elevation & Notes (1 of 5)	sd902-1 (139k)	sd902-1 (31k)
SD 9.02	Median Sign Structure (One Sided) Foundation Details (2 of 5)	sd902-2 (132k)	sd902-2 (65k)
SD 9.02	Median Sign Structure (One Sided) Type 'A' Sign Mount Assembly (3 of 5)	sd902-3 (59k)	sd902-3 (58k)
SD 9.02	Median Sign Structure (One Sided) Type 'B' Sign Mount Assembly (4 of 5)	sd902-4 (63k)	sd902-4 (68k)
SD 9.02	Median Sign Structure (One Sided) Light Support and Misc. Details (5 of 5)	sd902-5 (68k)	sd902-5 (49k)
Download Median Sign Structure (One Sided) Drawings (1 through 5)			sd902all (269k)

The method of measurement and bid item numbers for the Traffic Median Sign Structure (One Sided) described above are summarized as follows:

Bid Item Number	Description	Method of Measurement

6060162	Sign Structure (Median)(One Sided)	Each
6060239	Foundation for Sign Structure (Median)	Each

Documents provided in PDF format will require Adobe Acrobat Reader to view.
Compressed documents provided in ZIP format will require Winzip to view.

Privacy Statement | Contact ADOT
© Copyright Arizona Department of Transportation All Rights Reserved