F.H.W.A. REGION	STATE	PROJECT NO.	SHEET NO.	TOTAL SHEETS	AS BUILT
9	ARIZ.				

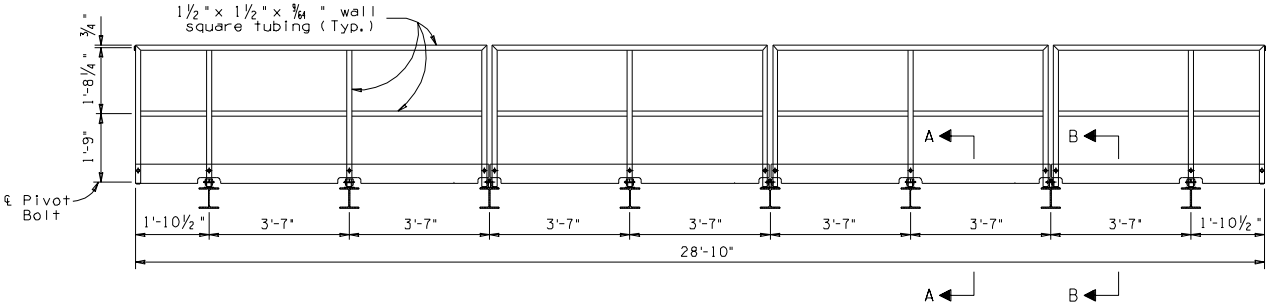

HANDRAIL ELEVATION

Scale: 5/8" = 1'-0"

NOTE:

Handrail to be 1½" x 1½" x 3/64" square steel tubing weighing 2.70 plf.

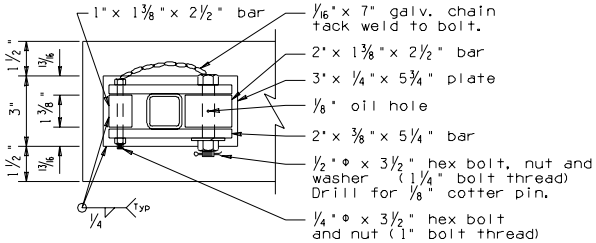

SECTION C-C

(Single Post)

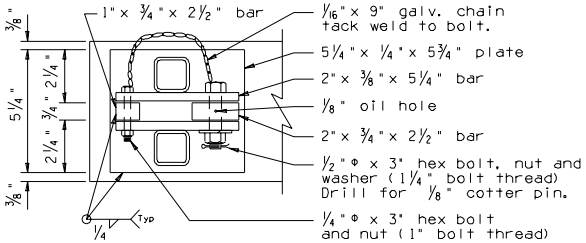

SECTION E-E

(Dual Post)

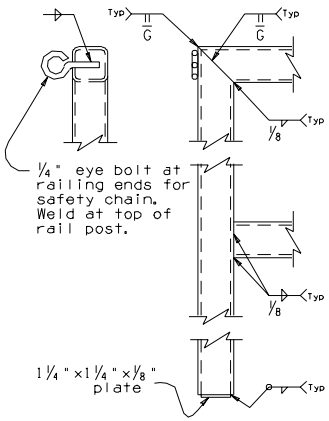

HANDRAIL WELD DETAILS

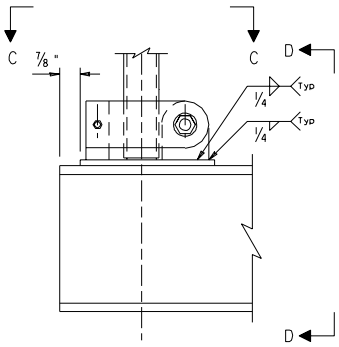

SECTION A-A

(Single Post)

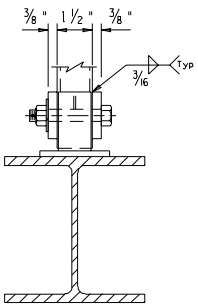

SECTION D-D

(Single Post)

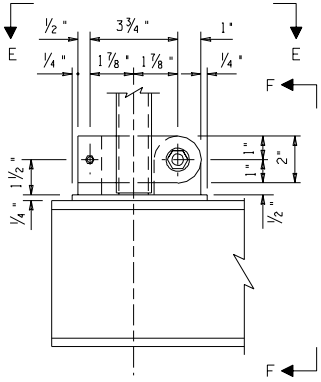

SECTION B-B

(Dual Post)

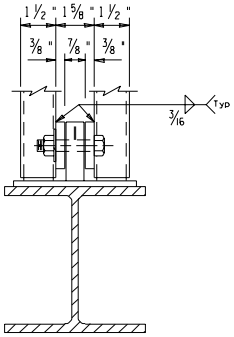

SECTION F-F

(Dual Post)

NOTE:

Provide 5/8" Φ holes for ½" Φ pivot bolts and ⅜" Φ holes for ¼" Φ lock bolts.

DESIGN APPROVED Shafi U. Hasan	ARIZONA DEPARTMENT OF TRANSPORTATION INTERMODAL TRANSPORTATION DIVISION **BRIDGE GROUP STRUCTURE DETAIL**
APPROVED FOR DISTRIBUTION J. Daniel Dorn	VARIABLE MESSAGE SIGN CATWALK HANDRAIL DETAILS
ROUTE / LOCATION	DRAWING NO. SD 9.50(4 OF 5)
TRACS NO.	___ OF ___