F.H.W.A. REGION	STATE	PROJECT NO.	SHEET NO.	TOTAL SHEETS	AS BUILT
9	ARIZ.				

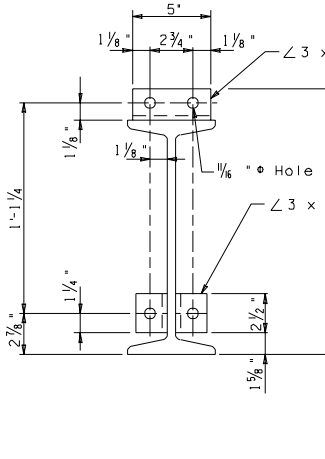

VIEW A-A

Sign Support Mounting - Upper Bracket

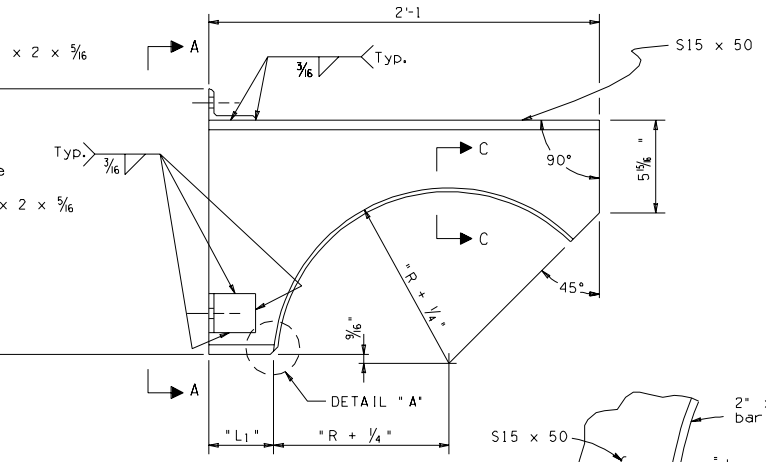

UPPER BRACKET

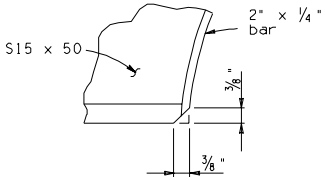

DETAIL "A"

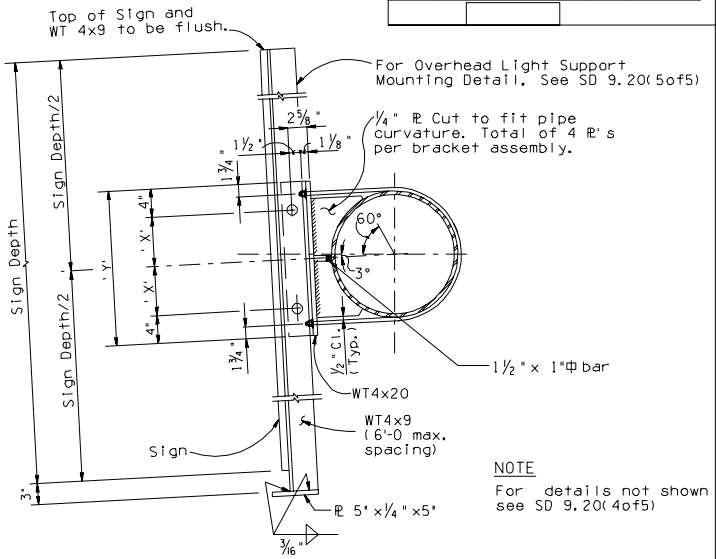

SECTION B-B

NOTE

For details not shown see SD 9.20(4of5)

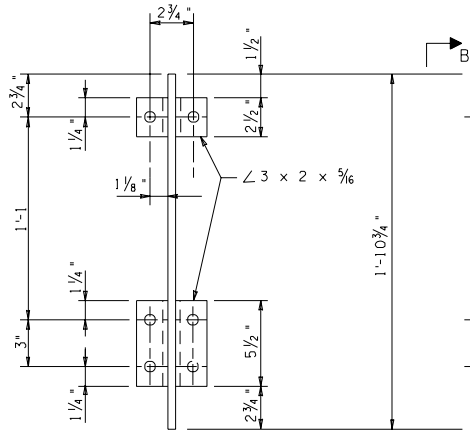

VIEW B-B

Sign Support Mounting - Lower Bracket

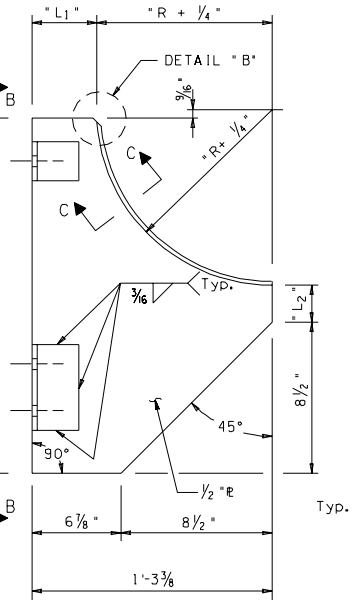

LOWER BRACKET

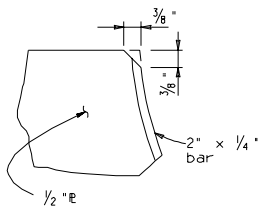

DETAIL "B"

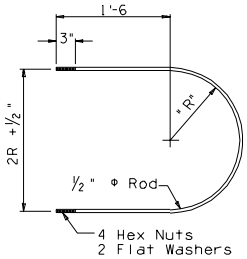

SIGN SUPPORT U-BOLT

	Distance	
Pipe O.D.	'X'	'Y'
12¾"	4⅜"	1'-4¾"
16"	6"	1'-8
20"	8"	2'-0
22"	9"	2'-2

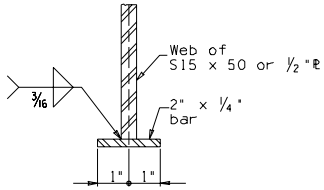

SECTION C-C

Frame Type	Nominal Pipe Dia.	R	L_1	L_2
1F	12"	6⅜"	8¾"	8 3/16"
2F	16"	8"	7⅛"	6 9/16"
3F	20"	10"	5⅛"	4 9/16"
4F	22"	11"	4⅛"	3 9/16"

DESIGN APPROVED Shafi U. Hasan	ARIZONA DEPARTMENT OF TRANSPORTATION INTERMODAL TRANSPORTATION DIVISION **BRIDGE GROUP STRUCTURE DETAIL**
APPROVED FOR DISTRIBUTION J. Daniel Dorn	VARIABLE MESSAGE SIGN TUBULAR FRAME MOUNTING & SIGN BRACKET DETAILS
ROUTE / LOCATION	DRAWING NO. SD 9.50(3 of 5)
TRACS NO.	___ OF ___