F.H.W.A. REGION	STATE	PROJECT NO.	SHEET NO.	TOTAL SHEETS	AS BUILT
9	ARIZ.				

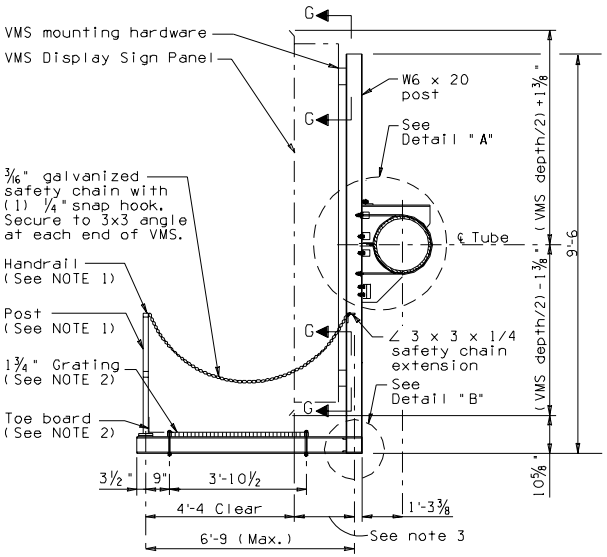

SECTION A-A

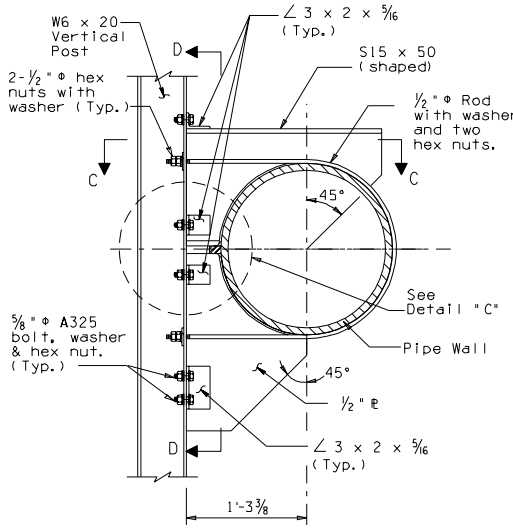

DETAIL "A"

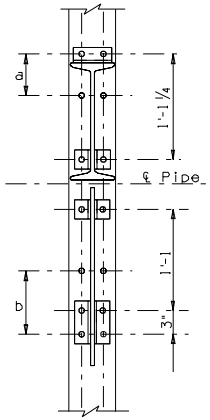

SECTION D-D

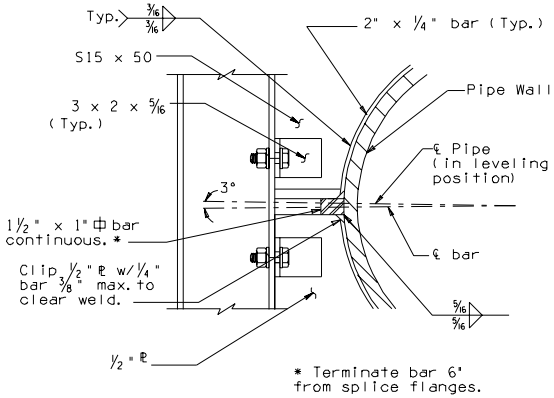

DETAIL "C"

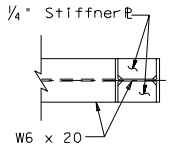

SECTION F-F

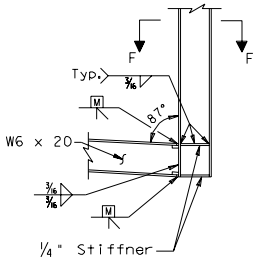

DETAIL "B"

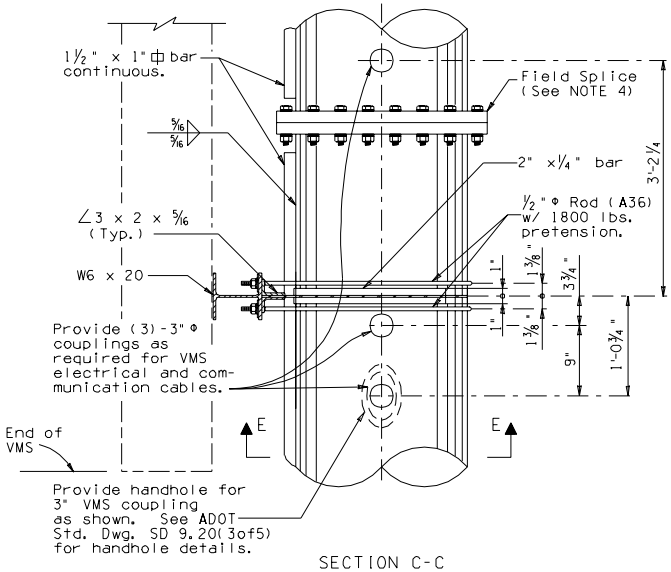

SECTION C-C

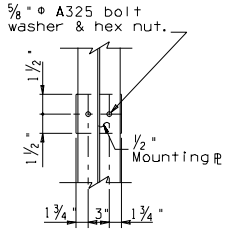

SECTION G-G

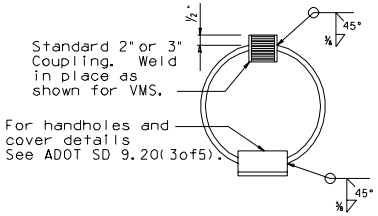

SECTION E-E

NOTE:

1. See SD 9.50 Sheet 4 of 5 for handrail, post and hinge details.
2. See SD 9.50 Sheet 5 of 5 for grating and toeboard details.
3. Dimensions to be determined from VMS sign manufacturer. Grating shall extend under face of VMS sign panel.
4. Optional mast arm field splice, if any, shall not interfere with VMS panel supports, handhole or coupling locations.

Frame Type	Nominal Pipe Dia.	R	a	b
1F	12"	6 3/8"	10 1/16"	12 11/16"
2F	16"	8"	8 7/16"	11 1/16"
3F	20"	10"	6 7/16"	9 1/16"
4F	22"	11"	5 7/16"	8 1/16"

DESIGN APPROVED: Shafi U. Hasan

APPROVED FOR DISTRIBUTION: J. Daniel Dare

ARIZONA DEPARTMENT OF TRANSPORTATION
INTERMODAL TRANSPORTATION DIVISION
BRIDGE GROUP STRUCTURE DETAIL

VARIABLE MESSAGE SIGN
TUBULAR FRAME
MOUNTING DETAILS

ROUTE | LOCATION | DRAWING NO. SD 9.50(2 of 5)

TRACS NO. | ___ OF ___