FHWA REGION	STATE	PROJECT NO.	SHEET NO.	TOTAL SHEETS	AS BUILT
9	ARIZ.				

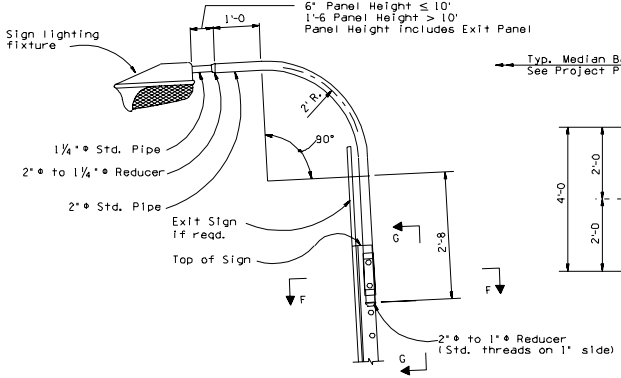

OVERHEAD LIGHT SUPPORT MOUNTING DETAIL

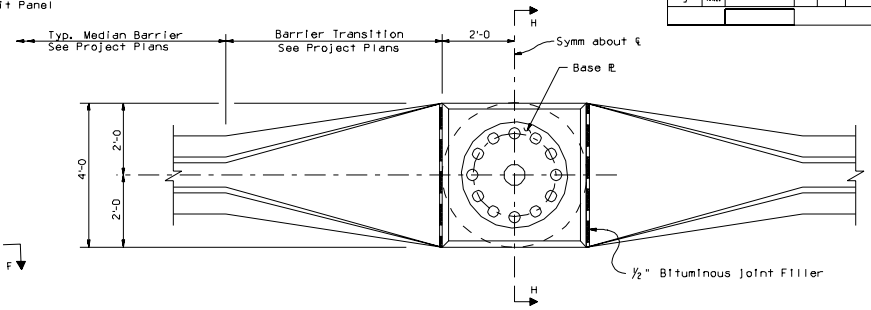

PLAN - TUBULAR POST ON BARRIER

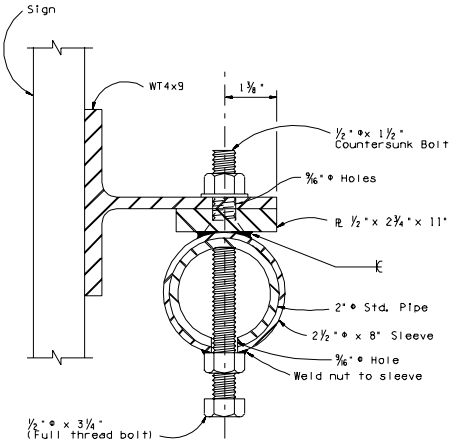

SECTION F-F

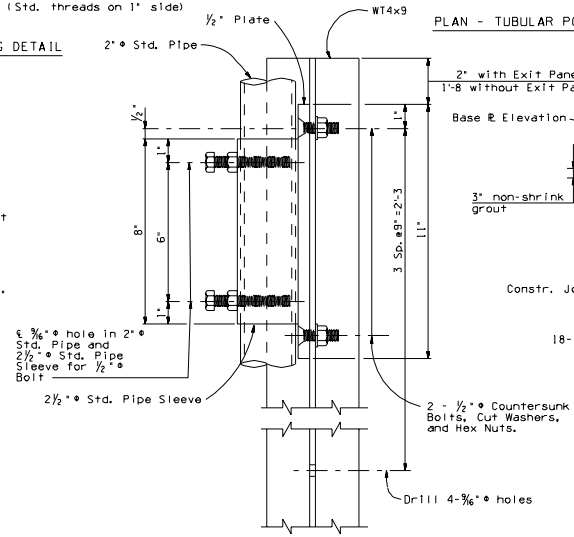

ELEVATION G-G

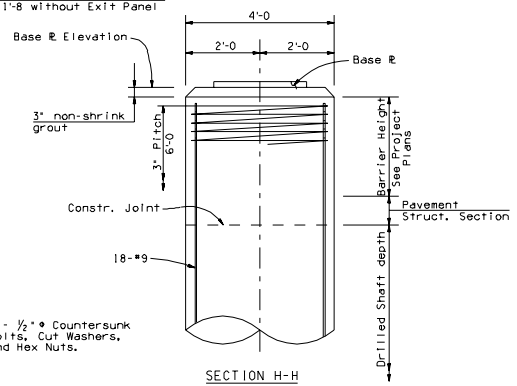

SECTION H-H

DESIGN APPROVED	ARIZONA DEPARTMENT OF TRANSPORTATION INTERMODAL TRANSPORTATION DIVISION **BRIDGE GROUP STRUCTURE DETAIL**
CHIEF BRIDGE ENGINEER	TUBULAR SIGN STRUCTURES TUBULAR FRAME LIGHT SUPPORT AND MISC. DETAILS
ROUTE / LOCATION	DRAWING NO. SD 9.20 (5of5)
TRACS NO.	___ OF ___