F.H.W.A. REGION	STATE	PROJECT NO.	SHEET NO.	TOTAL SHEETS	AS BUILT
9	ARIZ.				

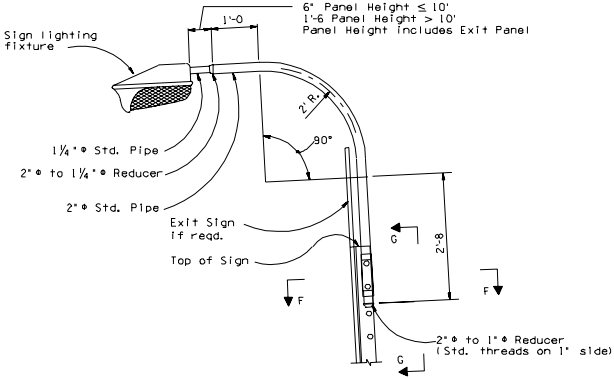

OVERHEAD LIGHT SUPPORT MOUNTING DETAIL

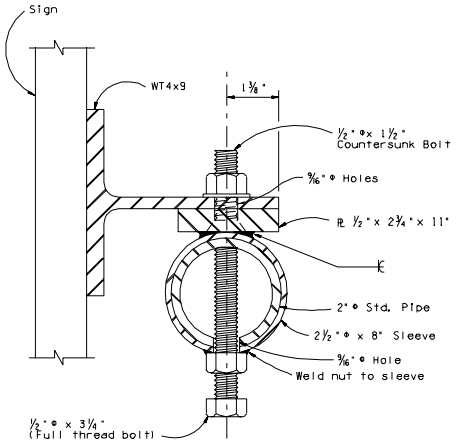

SECTION F-F

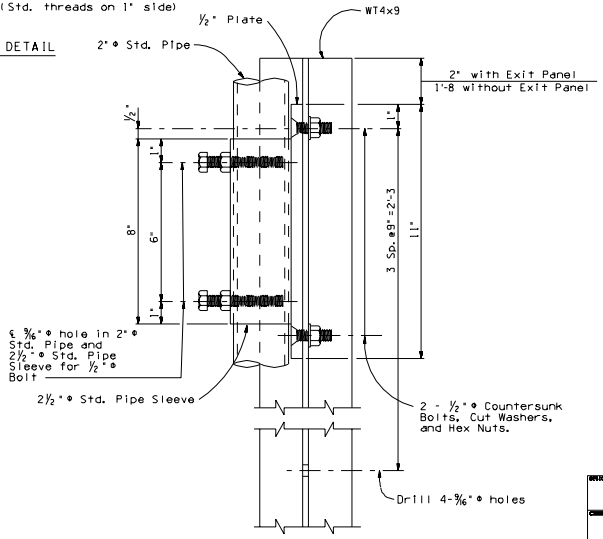

ELEVATION G-G

DESIGN APPROVED James R. Pyne	ARIZONA DEPARTMENT OF TRANSPORTATION INTERMODAL TRANSPORTATION DIVISION **BRIDGE GROUP STRUCTURE DETAIL**
CHECKED BY J. Daniel Davis	TUBULAR SIGN STRUCTURES TUBULAR CANTILEVER LIGHT SUPPORT DETAILS
ROUTE / LOCATION	DRAWING NO. SD 9.10 (5of5)
TRACS NO.	___ OF ___