FEDERAL REGION	STATE	PROJECT NO.	SHEET NO.	TOTAL SHEETS	AS BUILT
9	ARIZ.				

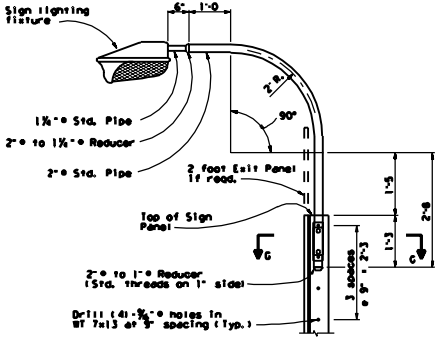

OVERHEAD LIGHT SUPPORT DETAIL

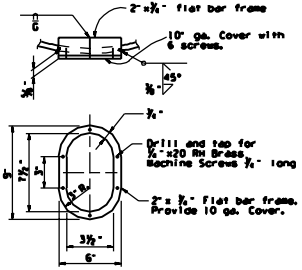

HANDHOLE & COVER DETAILS

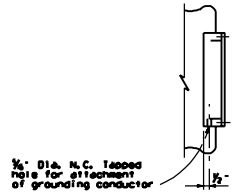

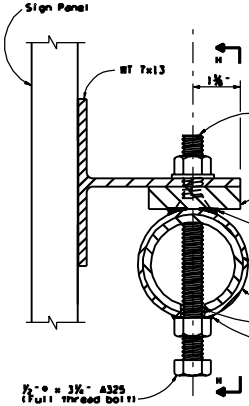

SECTION G-G

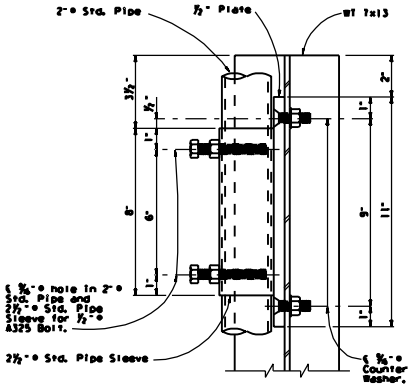

ELEVATION H-H

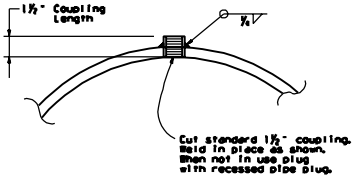

COUPLING DETAIL

Shafi K. Hasan

Tean A. Nehme

ARIZONA DEPARTMENT OF TRANSPORTATION
INTERMODAL TRANSPORTATION DIVISION
BRIDGE GROUP STRUCTURE DETAIL

OVERHEAD SIGN STRUCTURE (ONE SIDED)
LIGHT SUPPORT AND MISC. DETAILS

TRACS NO.

SHEET NO. 3 OF 3

This is Standard Drawing prepared in this Standard Drawing has been prepared in accordance with recognized engineering principles and is for general use. It should not be used for specific application without competent professional examination and verification of its suitability and applicability. Use of this standard is the responsibility of the professional engineer certifying a design submitted to the Arizona Department of Transportation for review and acceptance.

No.	Revision	Date	By
1			
2			
3			
4			