FORMAL REVISION	STATE	PROJECT NO.	SHEET NO.	TOTAL SHEETS	AS BUILT
9	ARIZ.				

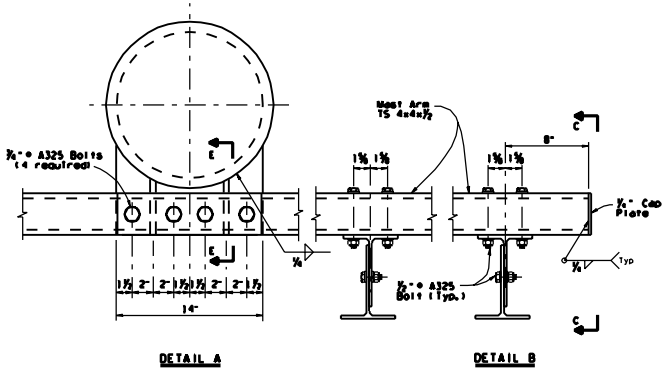

DETAIL A

DETAIL B

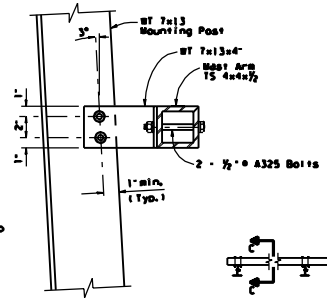

SECTION C-C

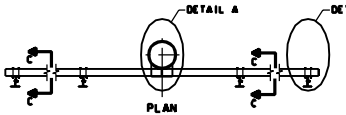

PLAN

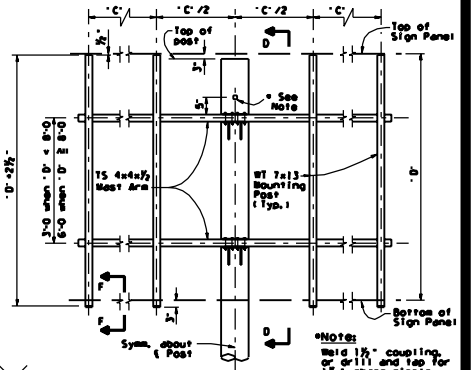

ELEVATION
(Sign Mount Assembly)

*Note:
Weld 1 1/2" coupling, or drill and tap for 1 1/2" chase nipple. Plug with recessed pipe plug.

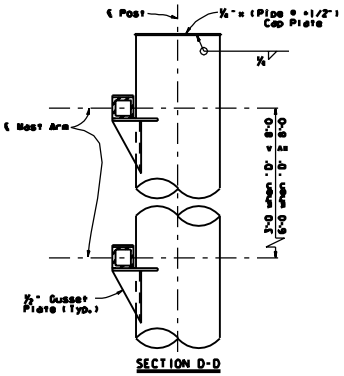

SECTION D-D

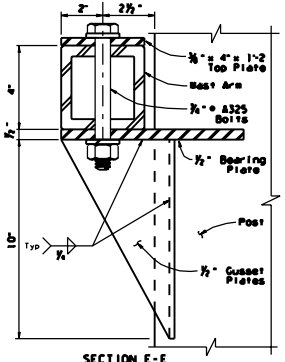

SECTION E-E

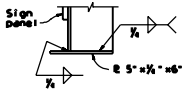

VIEW F-F

TYPE B FRAME

This is Copyright
The Standard presented in this Standard Drawing has been prepared in accordance with recognized engineering principles and is for general use. It should not be used for specific application without competent professional examination and verification of its suitability and applicability. Any use of a Standard Drawing by a person or entity other than the ADOT Bridge Group constitutes a waiver of any and all claims against the ADOT Bridge Group and the State of Arizona for any damages.

No.	Date	By	Description
1			Original Issue

Shafi K. Hasan
Jean A. Nehme

ARIZONA DEPARTMENT OF TRANSPORTATION
INTERMODAL TRANSPORTATION DIVISION
BRIDGE GROUP STRUCTURE DETAIL

MEDIAN SIGN STRUCTURE (ONE SIDED)
TYPE B SIGN MOUNT ASSEMBLY

TRACS NO.

STANDARD NO. 9 SHEET 9 OF 9