FORMAL REVISION	STATE	PROJECT NO.	SHEET NO.	TOTAL SHEETS	AS BUILT
9	ARIZ.				

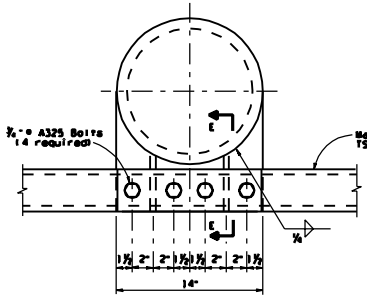

DETAIL A

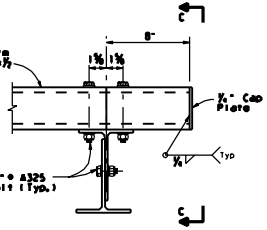

DETAIL B

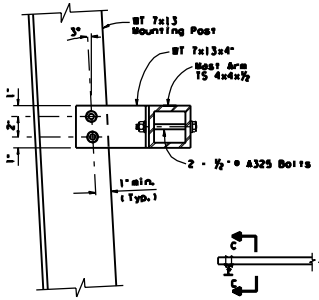

SECTION C-C

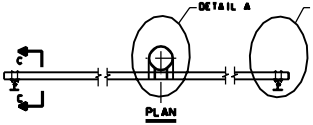

PLAN

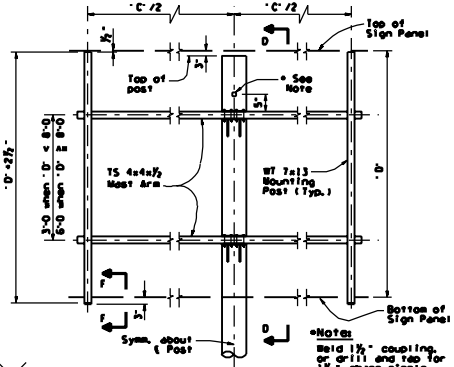

ELEVATION
(Sign Mount Assembly)

*Note:
Weld 1½" coupling, or drill and tap for 1½" chase nipple. Plug with recessed pipe plug.

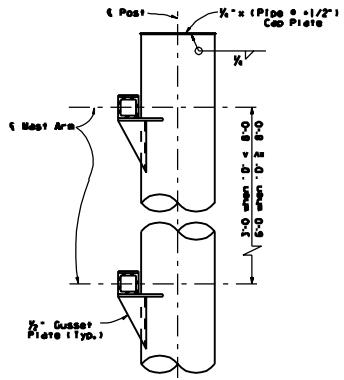

SECTION D-D

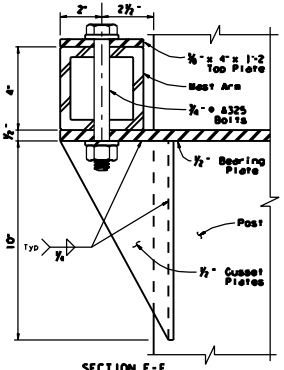

SECTION E-E

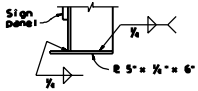

VIEW F-F

TYPE A FRAME

Shafi K. Hasan
Tean A. Nehme

ARIZONA DEPARTMENT OF TRANSPORTATION
INTERMODAL TRANSPORTATION DIVISION
BRIDGE GROUP STRUCTURE DETAIL

MEDIAN SIGN STRUCTURE HOME SHEET
TYPE A SIGN MOUNT ASSEMBLY

TRACS NO.

SHEET 9 OF 9

This Standard Drawing is provided in this Standard Drawing has been prepared in accordance with recognized engineering principles and is for general use. It should not be used for specific application without competent professional examination and verification of its suitability and applicability. It is a violation of Arizona Revised Statutes Section 32-145 for any person to modify an original document bearing the seal of a registered professional engineer. Contact which the seal 32-128 and 32-129 apply.

No.	Date	By	Description