FORM. NUMBER	STATE	PROJECT NO.	SHEET NO.	TOTAL SHEETS	AS BUILT
9	ARIZ.				

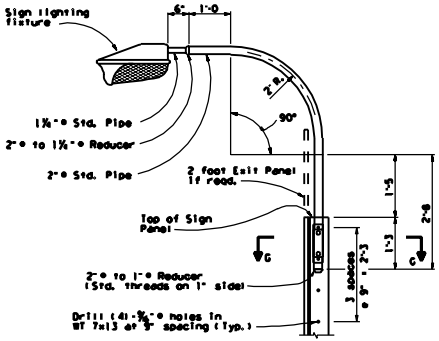

OVERHEAD LIGHT SUPPORT DETAIL

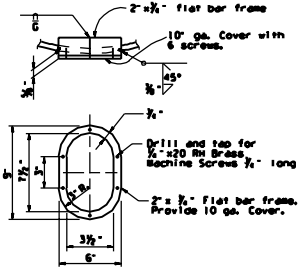

HANDHOLE & COVER DETAILS

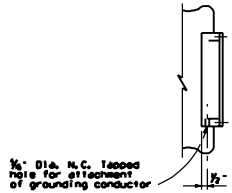

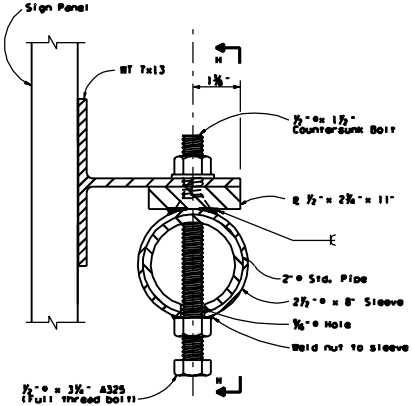

SECTION G-G

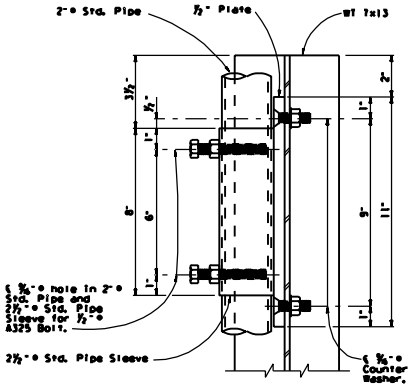

ELEVATION H-H

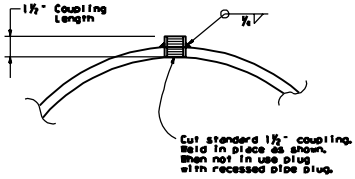

COUPLING DETAIL

Sheet Name

Sheet Number

Revision Date

Revision Number

Revision Description

Revision Initials

Sheet Number

Sheet Name

Shafi K. Hasan

Tean A. Nehme

ARIZONA DEPARTMENT OF TRANSPORTATION
INTERMODAL TRANSPORTATION DIVISION
BRIDGE GROUP STRUCTURE DETAIL

MEDIAN SIGN STRUCTURE (TWO SIDED)
LIGHT SUPPORT AND MISC. DETAILS

TRACS NO.

SHEET OF