FORMAL REVISION	STATE	PROJECT NO.	SHEET NO.	TOTAL SHEETS	AS BUILT
9	ARIZ.				

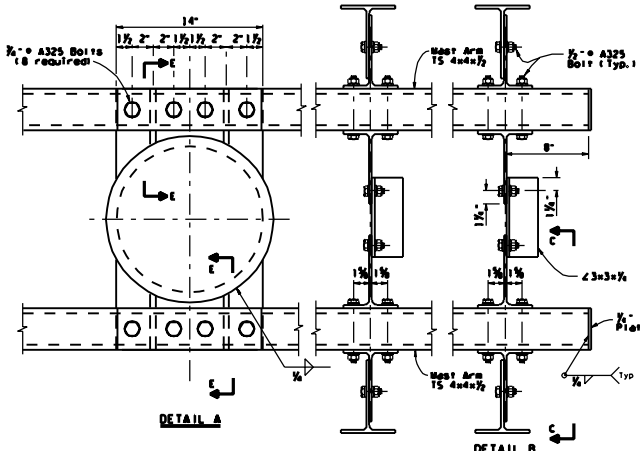

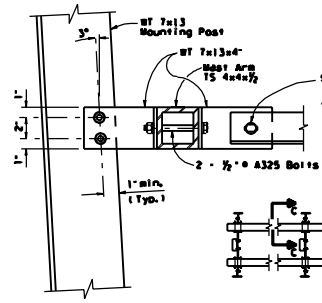

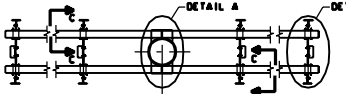

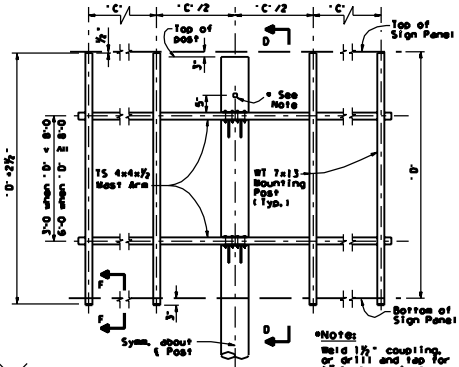

*Note:
Weld 1½" coupling, or drill and tap for 1½" chase nipple both sides. Plug with recessed pipe plug.

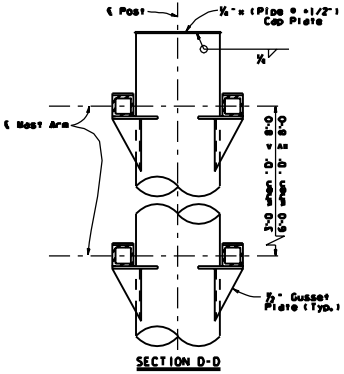

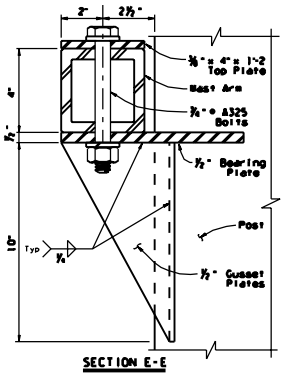

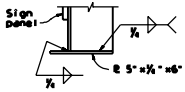

TYPE B FRAME

Shafi K. Hasan	ARIZONA DEPARTMENT OF TRANSPORTATION INTERMODAL TRANSPORTATION DIVISION BRIDGE GROUP STRUCTURE DETAIL
Jean A. Nehme	MEDIUM SIGN STRUCTURE (TWO SIGNS) TYPE B SIGN MOUNT ASSEMBLY
TRACS NO.	SHEET NO. 9 OF 9

This is DISCLAIMER
The information presented in this Standard Drawing has been prepared in accordance with recognized engineering principles and is for general use. It should not be used for specific application without competent professional examination and verification of its suitability and applicability by a licensed professional engineer. Conditions which the STAN DARD DRAWING is used for are beyond the control of the Arizona Department of Transportation and are the responsibility of the user.

No.	Date	By	Description
1			
2			
3			