FEDERAL REGION	STATE	PROJECT NO.	SHEET NO.	TOTAL SHEETS	AS BUILT
9	ARIZ.				

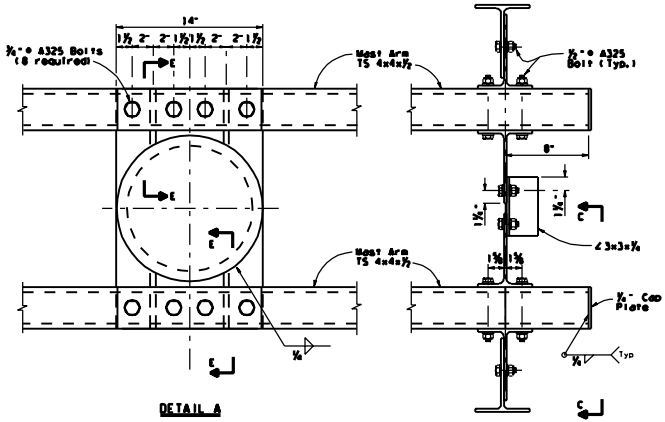

DETAIL A

DETAIL B

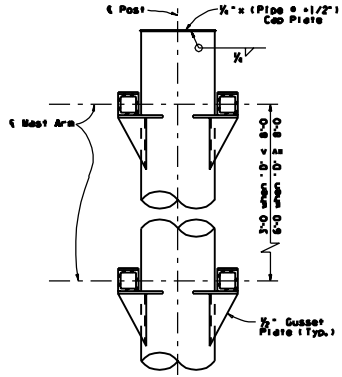

SECTION D-D

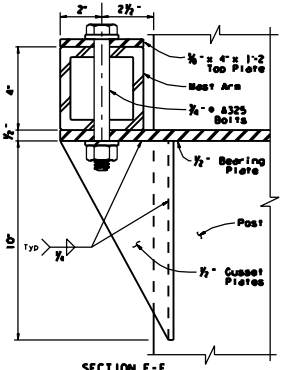

SECTION E-E

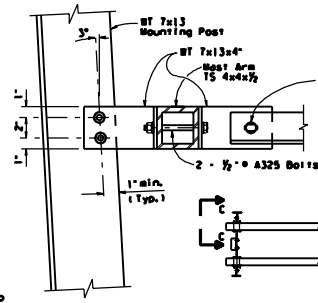

SECTION C-C

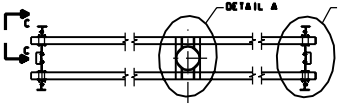

PLAN

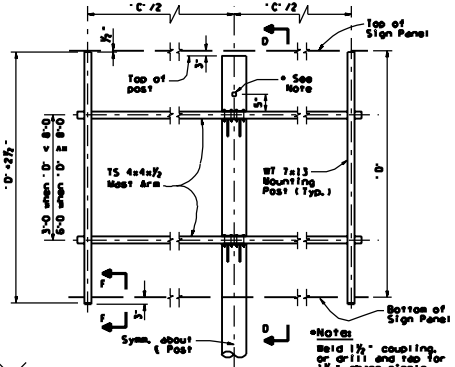

ELEVATION
(Sign Mount Assembly)

*Note:
Ream 1½" coupling, or drill and tap for 1½" chase nipple both sides. Plug with recessed pipe plug.

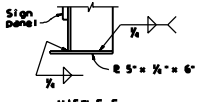

VIEW F-F

TYPE A FRAME

Shafi K. Hasan

Tean A. Nehme

ARIZONA DEPARTMENT OF TRANSPORTATION
INTERMODAL TRANSPORTATION DIVISION
BRIDGE GROUP STRUCTURE DETAIL

MEDIAN SIGN STRUCTURE (TWO SIDED)
TYPE A SIGN MOUNT ASSEMBLY

TRACS NO.

SHEET NO. 3 OF 3 SHEETS

This Standard Drawing is in MKS Standard Bridge Drawing Format. It has been prepared in accordance with recognized engineering principles and is for general use. It should not be used for specific application without competent professional examination and verification of its suitability and applicability. It is offered as a professional engineering document which has been prepared in accordance with recognized professional engineering principles and practices.

No.	Date	By	Description
1			
2			
3			