F.H.W.A. REGION	STATE	PROJECT NO.	SHEET NO.	TOTAL SHEETS	AS BUILT
9	ARIZ.				

NOTE:

A, B, C and D equal spaces (15 feet max.) measured along slope. See Contract Drawings for dimensions.

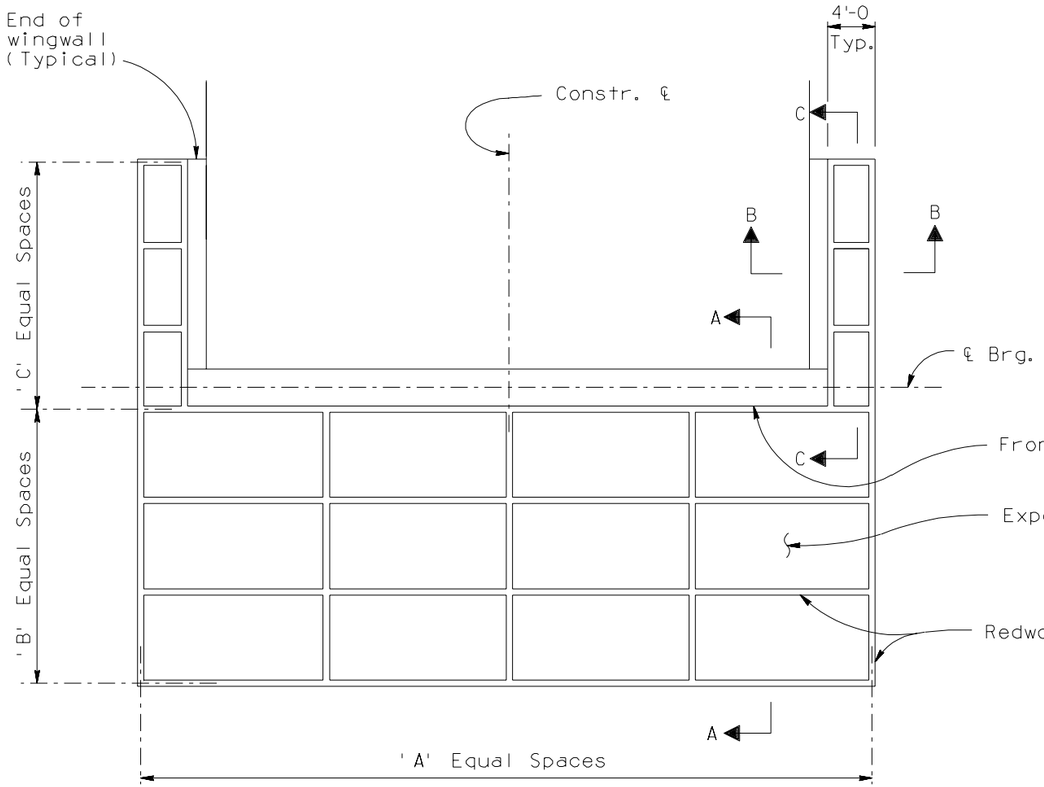

PLAN - RIGHT ANGLE BRIDGE

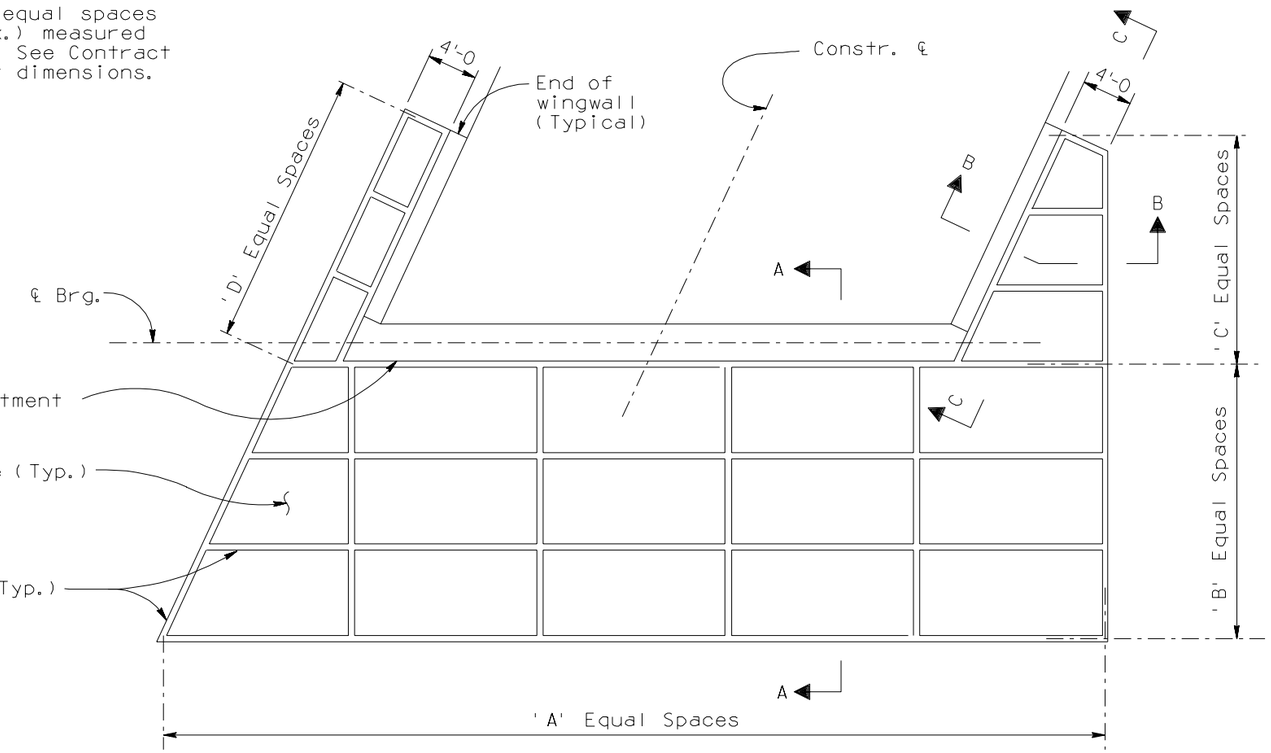

PLAN - SKEW BRIDGE

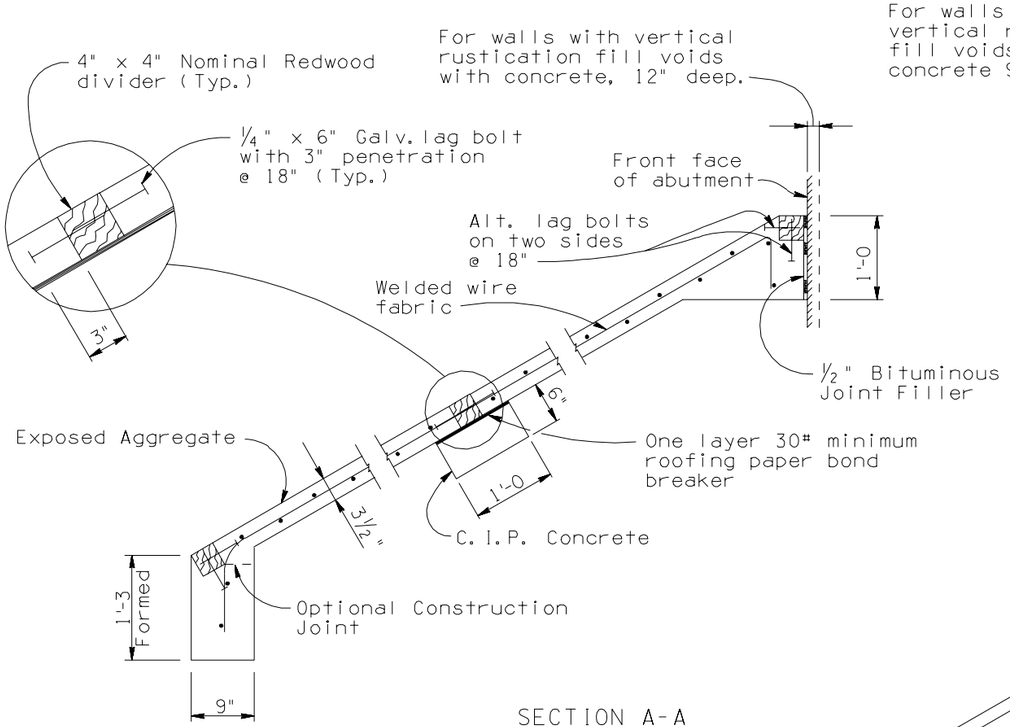

SECTION A-A

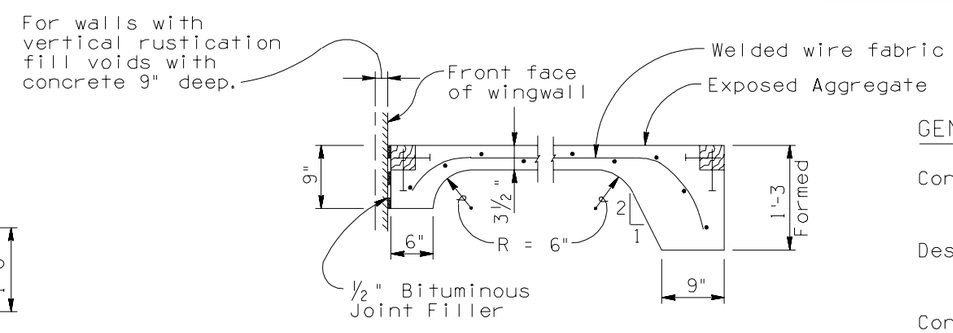

SECTION B-B

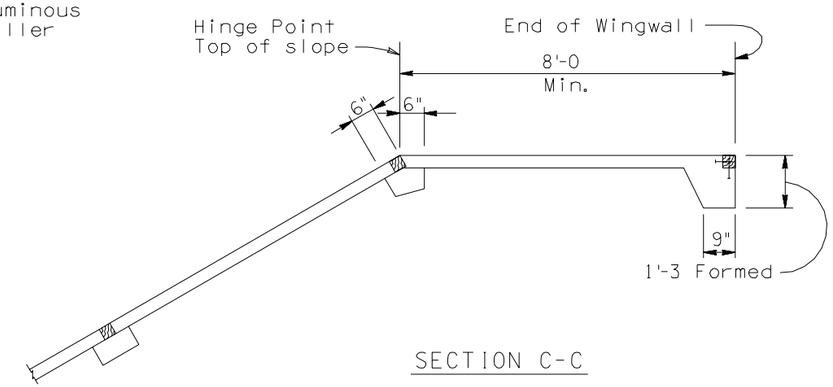

SECTION C-C

GENERAL NOTES:

Construction Specification - Arizona Department of Transportation Standard Specifications for Road and Bridge Construction, Edition of 2000.

Design Specifications - AASHTO Standard Specifications for Highway Bridges, Seventeenth Edition 2003.

Concrete for slope paving shall be Class "S", (f'c = 3000 psi) with exposed aggregate surface. Maximum size coarse aggregate shall be 3/4 inch. Shotcreting shall not be allowed.

Welded wire fabric shall be 6 x 6 - W1.4 x W1.4.

Item No. 9210007
SLOPE PAVING
Measure: Square Yards

DESIGN APPROVED Henry Man-Fai Sung	ARIZONA DEPARTMENT OF TRANSPORTATION INTERMODAL TRANSPORTATION DIVISION **BRIDGE GROUP STRUCTURE DETAIL**
APPROVED FOR DISTRIBUTION J. Daniel Dave	SLOPE PAVING DETAILS UNDERPASS
ROUTE / LOCATION	DRAWING NO. SD 2.04
TRACS NO.	___ OF ___