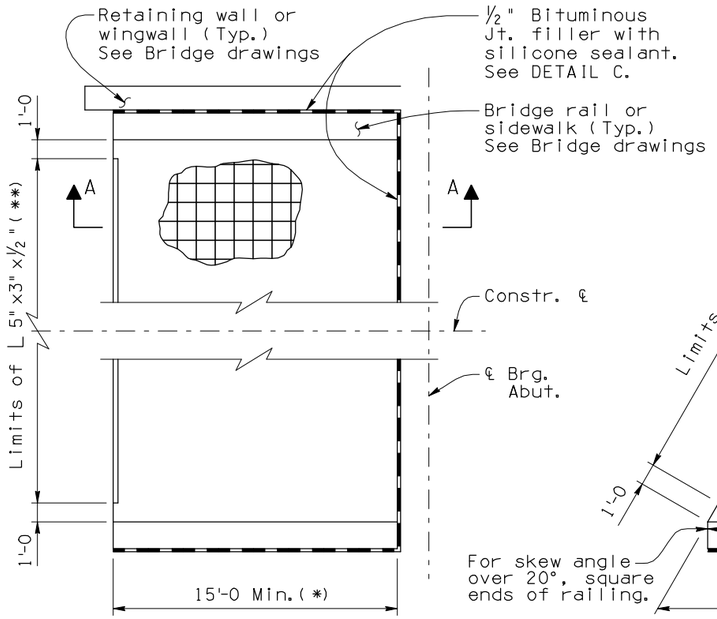

PLAN A
Rt. Angle Bridge

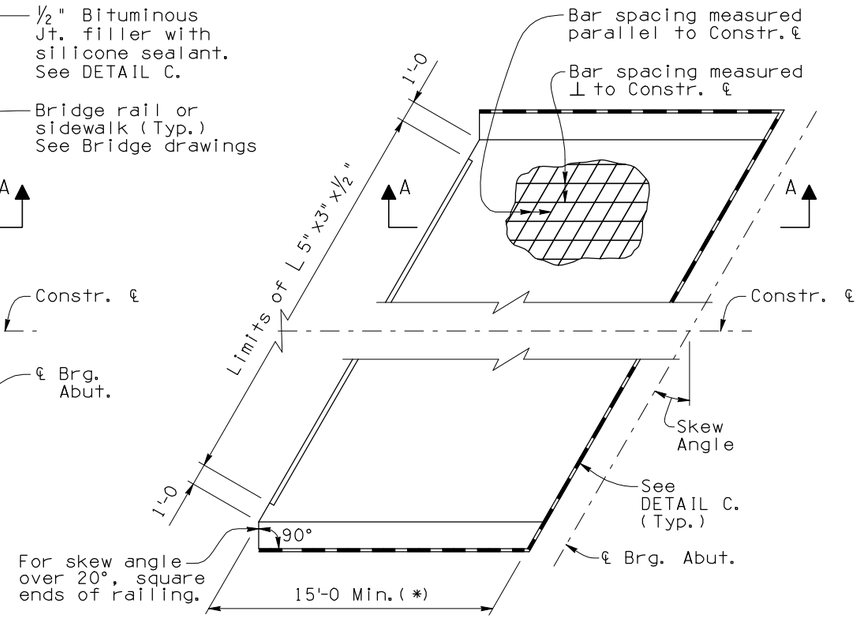

PLAN B
Skewed Bridge Without Anchor Slab
Skew Angle ≤ 45°

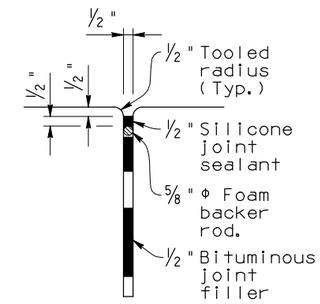

DETAIL C

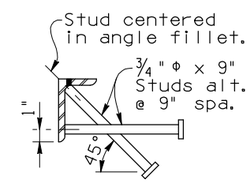

ALT. ANCHOR DETAIL

GENERAL NOTES:

Construction Specification - Arizona Department of Transportation Standard Specifications for Road and Bridge Construction, latest Edition.

Design Specifications - AASHTO LRFD Bridge Design Specifications, 4th Edition 2007.

All Concrete shall be Class "S" (f'c = 4000 psi).

Reinforcing steel shall conform to ASTM Specification A615. All reinforcing shall be furnished as Grade 60. All reinforcing shall be epoxy coated at locations above EL. 4000 ft.

All bends and hooks shall meet the requirements of AASHTO Article 5.10. All bend dimensions for reinforcing steel shall be out-to-out of bars. All placement dimensions for reinforcing steel shall be to center of bars unless noted otherwise.

All reinforcing steel shall have 2 inch clear cover unless noted otherwise.

Structural steel shall conform to ASTM specification A588 Grade 50 or A709 Grade 50W.

All welding shall conform to the requirements of the American Welding Society, ANSI/AASHTO/AWS D1.5 Bridge Welding Code, latest Edition.

Dimensions shall not be scaled from drawings.

Item No. 6011371 APPROACH SLAB
Measure: Square Foot

JOINT NOTE:

½" Silicone joint sealant shall be ASTM D5893 Type NS. 2" Silicone joint sealant shall be rapid-cure, self leveling, two-part silicone rubber sealant designed for expansion joints. Prime coat concrete sides of joint. Do not prime coat the backer rod. Backer rod shall be closed cell polyethylene foam.

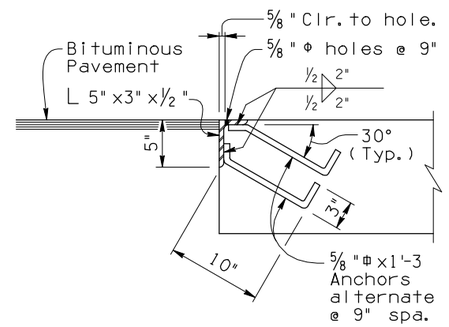

DETAIL A
Bituminous Pavement Alternate

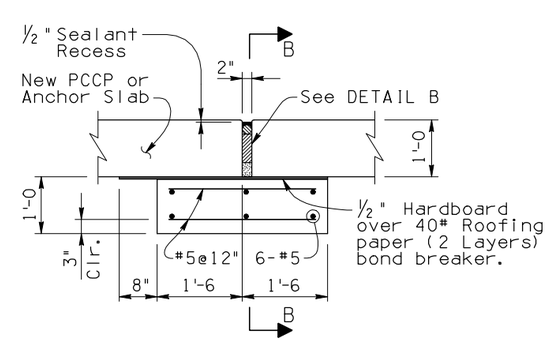

DETAIL A
Concrete Pavement Alternate

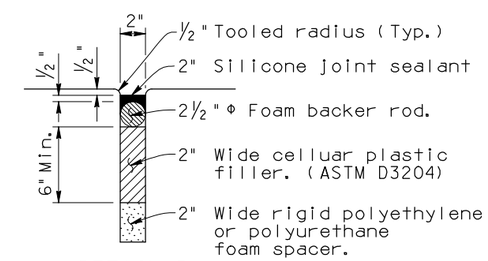

DETAIL B

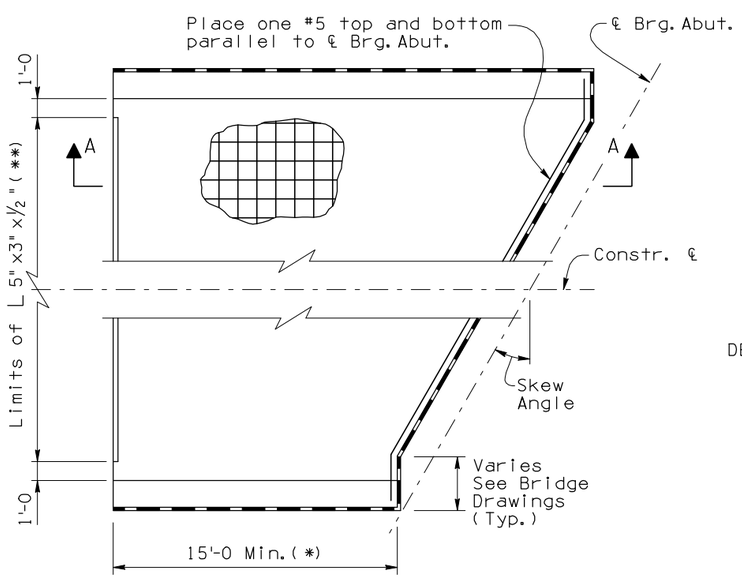

PLAN C
Skewed Bridge
Skew Angle > 45°

(**) Omit total guard angle for concrete pavement alternate.

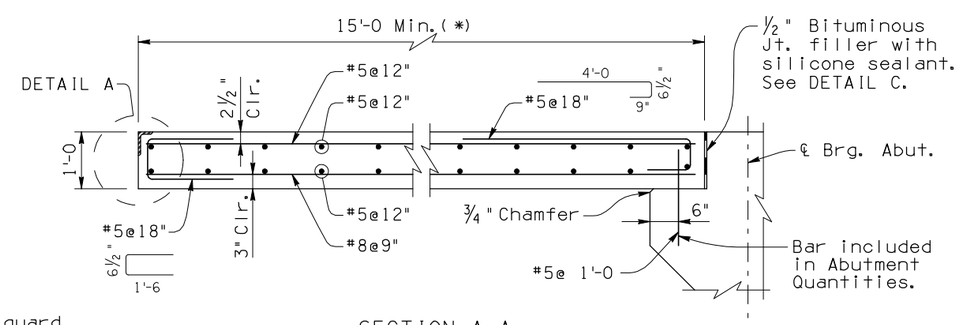

SECTION A-A

(*) See Bridge drawings for length.

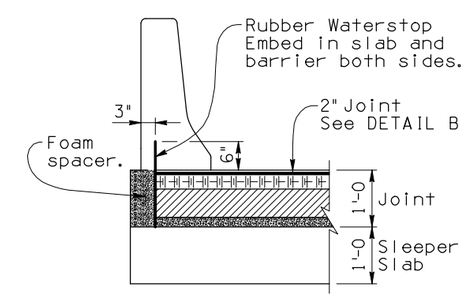

SECTION B-B

Note to Designer:
The information presented in this Standard Detail has been prepared in accordance with recognized engineering principles and is for general use. It should not be used for specific application without competent professional examination and verification of its suitability and applicability by a licensed professional engineer. Contents within the inner border line shall not be altered.

NO	DESCRIPTION OF REVISIONS	MADE BY	DATE
1	Original Issue	H.R.P.	11-00
2	General Update	S.U.H.	12-07
3			
4			

DESIGN APPROVED: Shafi U. Hasan
APPROVED FOR DISTRIBUTION: Jean A. Nehme

ARIZONA DEPARTMENT OF TRANSPORTATION
INTERMODAL TRANSPORTATION DIVISION
BRIDGE GROUP STRUCTURE DETAIL

APPROACH SLAB DETAILS

ROUTE | PROJECT NO. | FA NO. | DRAWING NO. SD 2.01
LOCATION | SHEET NO. OF