F.H.W.A. REGION	STATE	PROJECT NO.	SHEET NO.	TOTAL SHEETS	AS BUILT
9	ARIZ.				

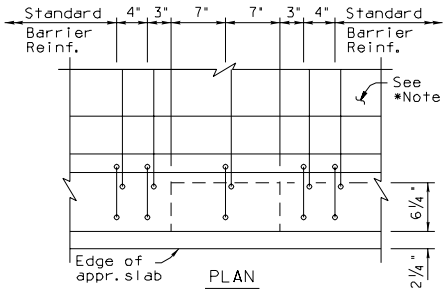

PLAN

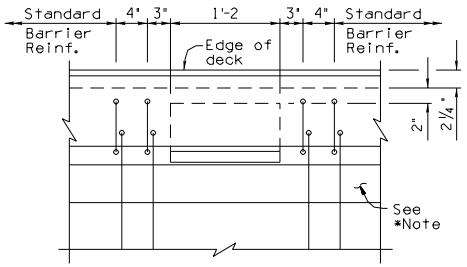

PLAN

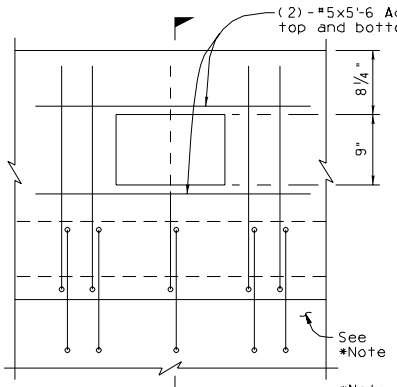

1

ELEVATION
(Back Face)

*Note:
Horiz. barrier reinforcement not shown for clarity.

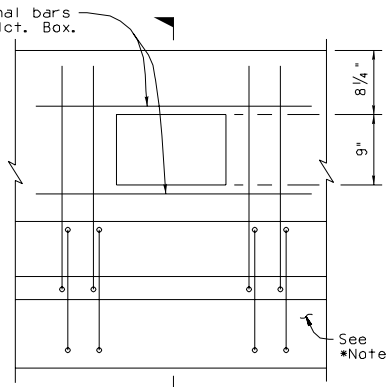

2

ELEVATION
(Front Face)

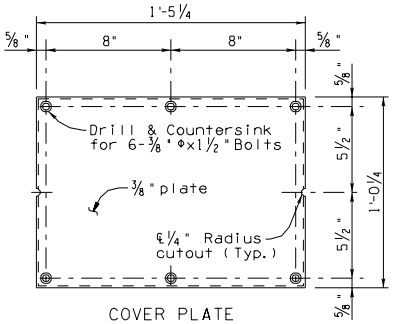

COVER PLATE

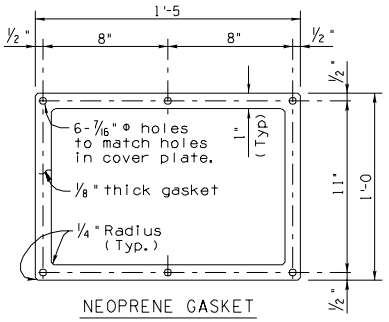

NEOPRENE GASKET

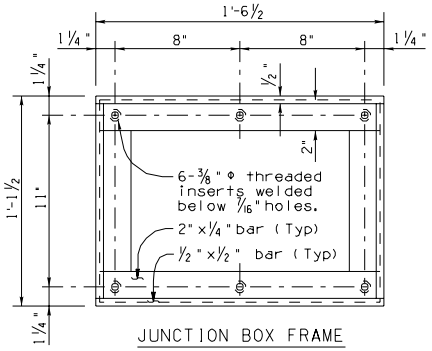

JUNCTION BOX FRAME

GENERAL NOTES:

Construction Specification - Arizona Department of Transportation Standard Specifications for Road and Bridge Construction, Latest Edition.

Design Specifications - AASHTO Standard Specifications for Highway Bridges, Latest Edition.

Structural steel shall conform to ASTM A36.

All welding shall conform to the requirements of the American Welding Society, ANSI/AASHTO/AWS D1.5-96 Bridge Welding Code.

All bolts shall conform to ASTM A307. Threaded inserts shall be loop type (U.N.C. thread).

All bolts, nuts and washers shall be galvanized in accordance with ASTM A153. All other steel shall be galvanized after fabrication in accordance with ASTM A123.

Chamfer all bottom edges of cover plate ⅛"x 45°. Cover plate shall have 1" letters embeded ⅛" to say: "ADOT ELECTRICAL HIGH VOLTAGE".

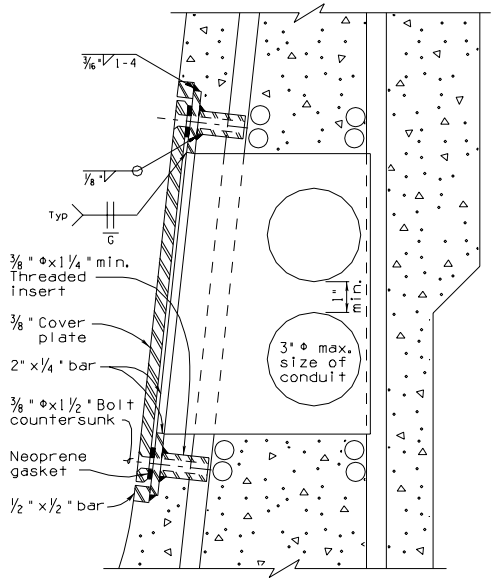

JUNCTION BOX DETAIL

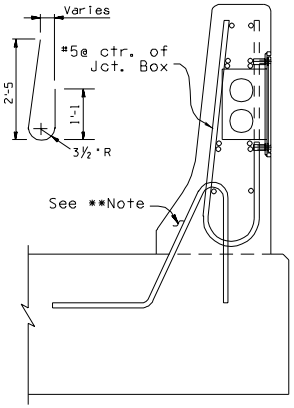

TYPE I JUNCTION BOX
(At Approach Transition) 1

**Note:
For concrete barrier dimensions and details not shown see SD 1.01 or SD 1.02

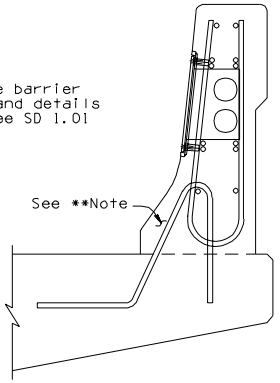

TYPE II JUNCTION BOX 2
(On Bridge)

Item No. 7320475
TYPE I JUNCTION BOX
Measure: Each

Item No. 7320476
TYPE II JUNCTION BOX
Measure: Each

Junction Box for 32" barrier shown. Details similar for 42" barrier.

DESIGN APPROVED	ARIZONA DEPARTMENT OF TRANSPORTATION INTERMODAL TRANSPORTATION DIVISION **BRIDGE GROUP STRUCTURE DETAIL**
APPROVED FOR DISTRIBUTION	BARRIER JUNCTION BOX
ROUTE / LOCATION	DRAWING NO. SD 1.11
TRACS NO.	___ OF ___