F.H.W.A. REGION	STATE	PROJECT NO.	SHEET NO.	TOTAL SHEETS	AS BUILT
9	ARIZ.				

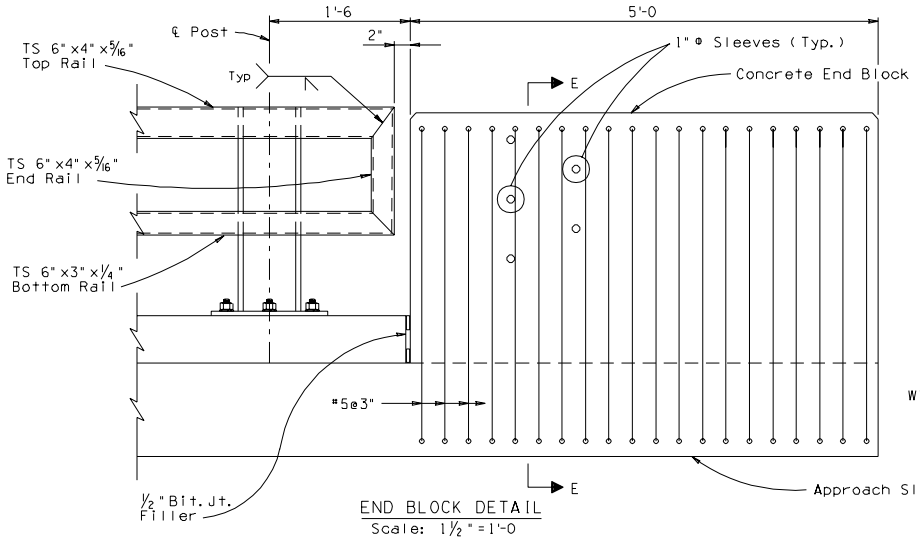

END BLOCK DETAIL
Scale: 1 1/2" = 1'-0

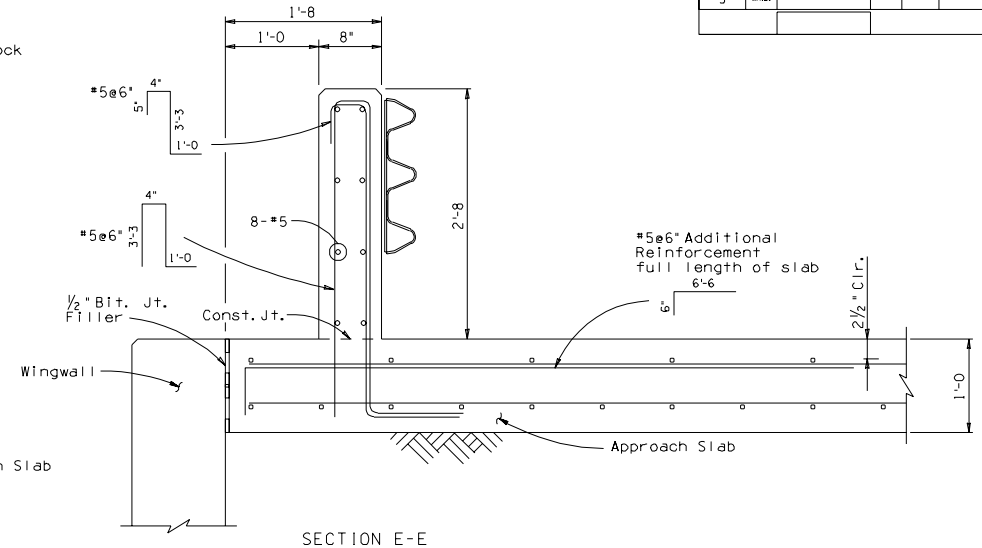

SECTION E-E
Scale: 1 1/2" = 1'-0

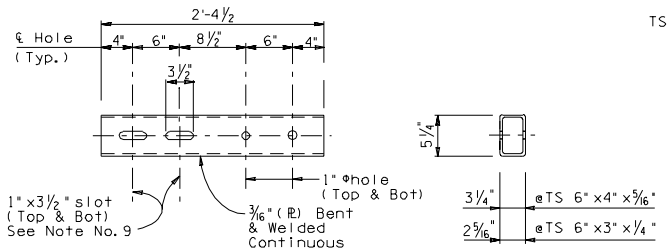

STANDARD SLEEVE DETAILS
Scale: 1 1/2" = 1'-0

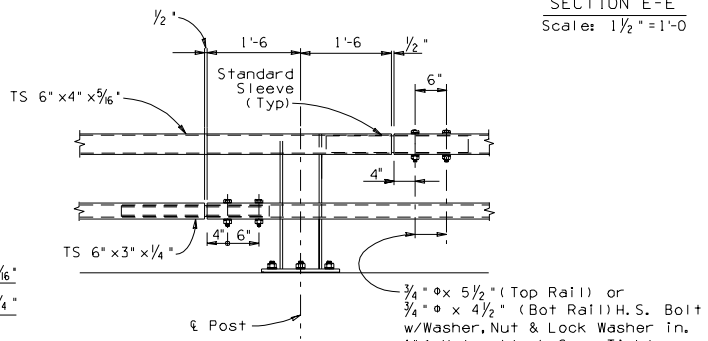

STANDARD SPLICE
Scale: 1" = 1'-0

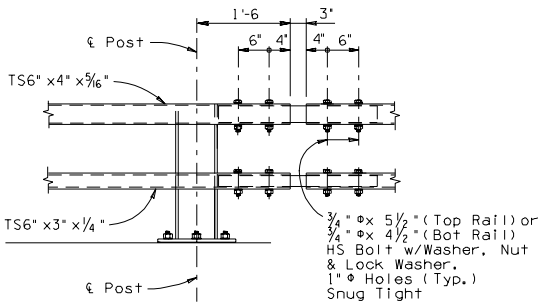

EXPANSION SPLICE
Scale: 1" = 1'-0

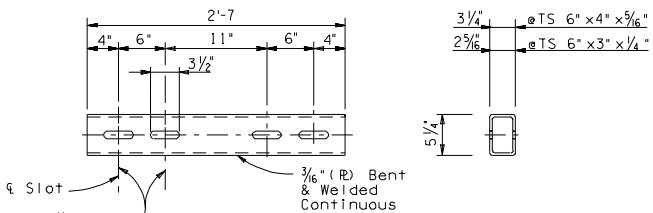

EXPANSION SLEEVE DETAILS
Scale: 1 1/2" = 1'-0

DESIGN APPROVED	ARIZONA DEPARTMENT OF TRANSPORTATION INTERMODAL TRANSPORTATION DIVISION **BRIDGE GROUP STRUCTURE DETAIL**
APPROVED FOR DISTRIBUTION	TWO TUBE BRIDGE RAIL
ROUTE / LOCATION	DRAWING NO. SD 1.06(3 of 4)
TRACS NO.	___ OF ___