NO	DESCRIPTION OF REVISIONS	MADE BY	DATE
1	ORIGINAL ISSUE	BAKER E&E	6/04
2			
3			
4			

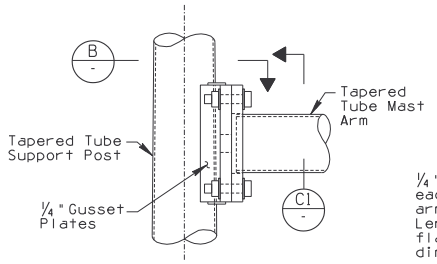

MAST ARM FLANGE DETAIL - ALTERNATIVE 1

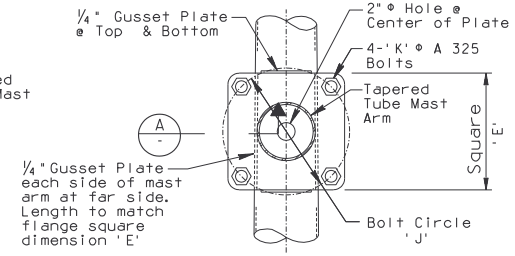

SECTION C1

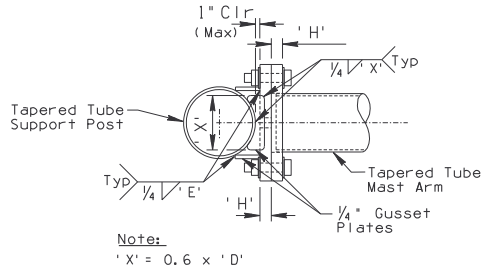

WELDING NOTES:

Welding of structural tubing shall conform to the requirements of the American Welding Society, Structural Welding Code, Latest Edition. All other welding shall conform to the requirements of the American Welding Society D1.1 Welding Code. All welding shall be continuous unless noted otherwise. All butt welds shall be full penetration using prequalified welding procedures and shall be inspected by ultrasonic testing. All butt welds shall be ground flush with base material.

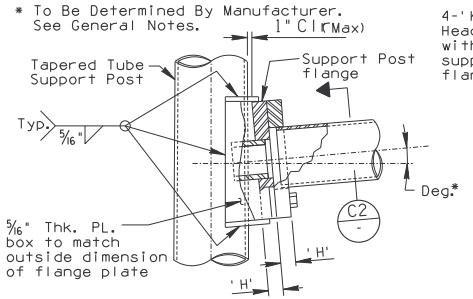

MAST ARM FLANGE DETAIL - ALTERNATIVE 2

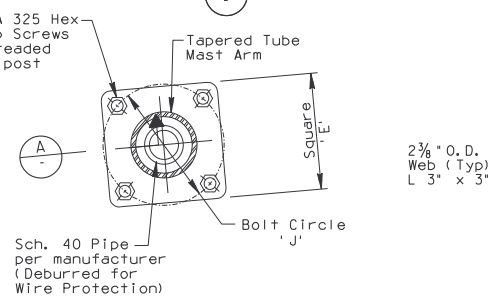

SECTION C2

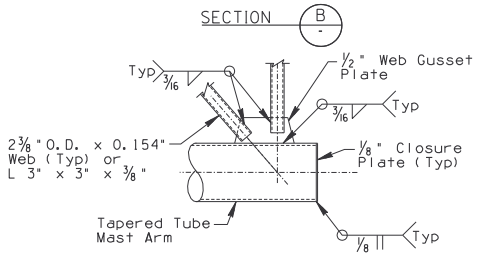

WEB TRUSS DETAIL

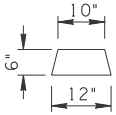

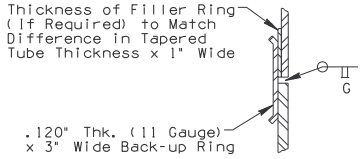

SPLICE DETAIL

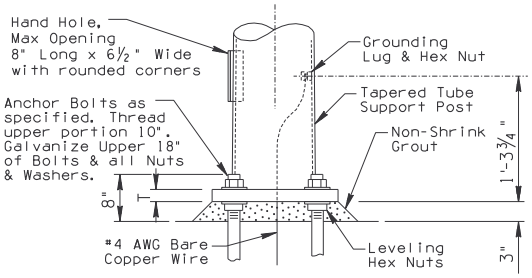

POST BASE PLATE DETAIL

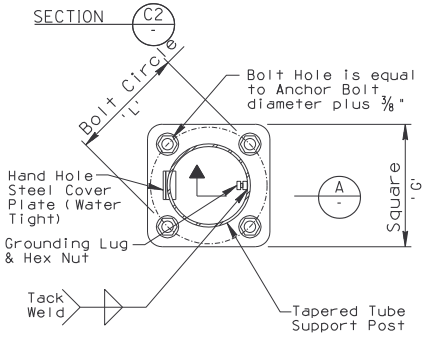

POST BASE PLATE PLAN

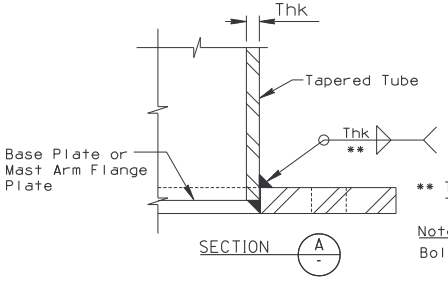

** Thk +1/16" at Mast Arm Flange Plate
Thk +1/8" at Base Plate

Note:
Bolts, Nuts, & Washers not shown.

	Mast Arm			Mast Arm Flange Plate			
Mast Arm Length	Tapered Tube Minimum Yield	Outside Diameter 'D'	Wall Thickness	Plate Thk. 'H'	Square 'E'	Bolt Circle 'J'	Bolt Diameter 'K'
16'-0"	48.0 ksi	8"	0.1793"	1"	12.5"	12"	1.25"
	55.0 ksi	7"	0.1793"	1"	12"	11"	1.25"
	65.0 ksi	7"	0.1875"	1"	12"	11"	1.25"
22'-0"	48.0 ksi	10.75"	0.1793"	1.25"	14"	14.5"	1.25"
	55.0 ksi	9"	0.1793"	1.25"	14"	13"	1.25"
	65.0 ksi	8"	0.1875"	1.25"	13"	12"	1.25"
34'-0"	48.0 ksi	13.5"	0.2391"	1.5"	17.5"	18"	1.5"
	55.0 ksi	12.5"	0.2092"	1.5"	17"	17"	1.5"
	65.0 ksi	13"	0.1875"	1.5"	17"	17"	1.5"

SHEET 2 OF 4
NOT TO SCALE

DESIGN APPROVED	ARIZONA DEPARTMENT OF TRANSPORTATION INTERMODAL TRANSPORTATION DIVISION STANDARD DRAWINGS	REV. 7/04
APPROVED FOR DISTRIBUTION SIGNATURE ON FILE	TAPERED TUBE SIGN STRUCTURE CANTILEVER POST AND MAST ARM DETAILS	DRAWING NO. S-11