NO	DESCRIPTION OF REVISIONS	MADE BY	DATE
1	RE-ISSUE	L. LOPEZ	2/02
2			
3			
4			

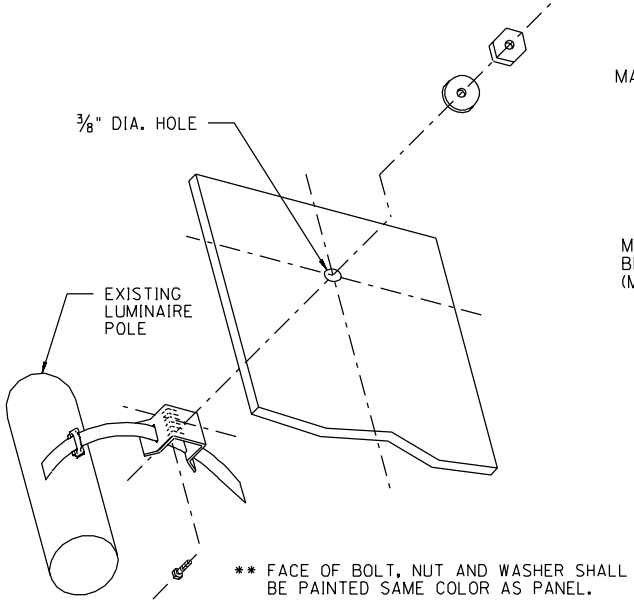

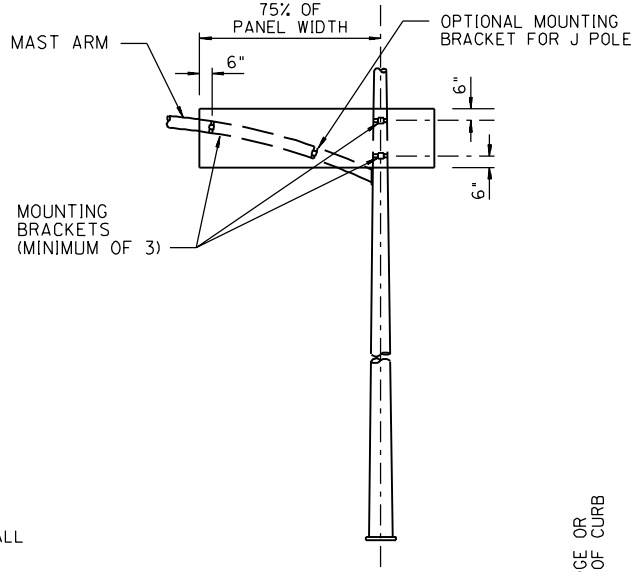

D3, STREET NAME SIGN, ON SIGNAL POLE
MOUNTING DETAIL

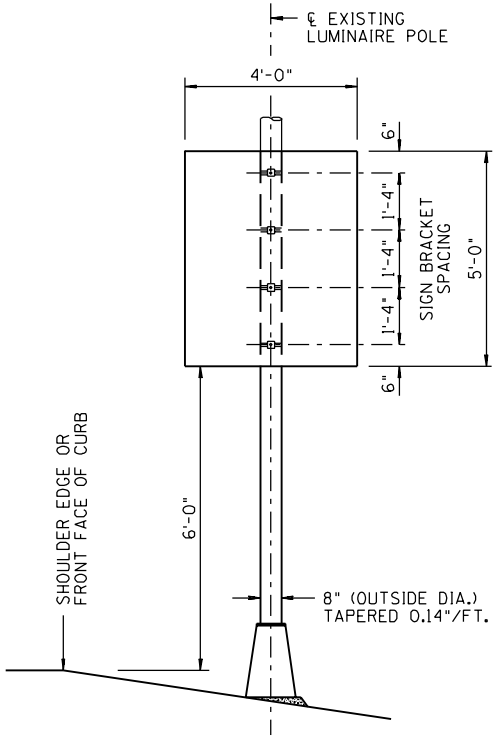

TYPICAL INSTALLATION OF SIGN NO. W13-5 OR W13-6 ON LUMINAIRE POLE

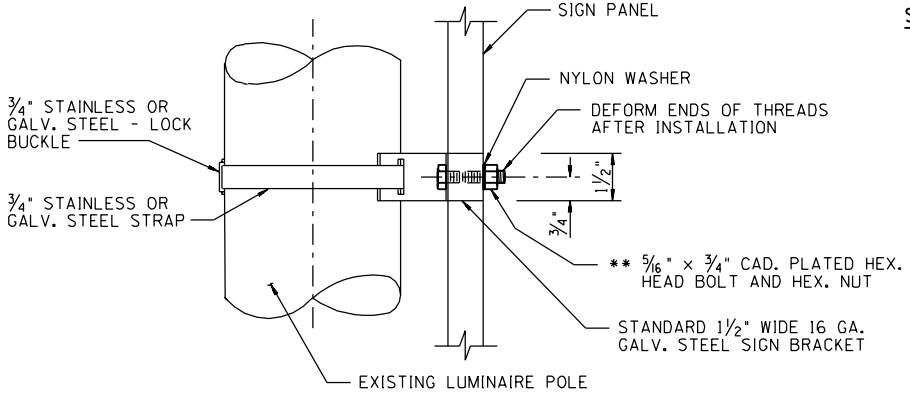

SIGN MOUNTING BRACKET INSTALLATION

SHEET 3 OF 3
NOT TO SCALE

DESIGN APPROVED SIGNATURE ON FILE	ARIZONA DEPARTMENT OF TRANSPORTATION INTERMODAL TRANSPORTATION DIVISION STANDARD DRAWINGS	REV. 2/02
APPROVED FOR DISTRIBUTION	SIGN INSTALLATION ON POLE	DRAWING NO. S-9