NO	DESCRIPTION OF REVISIONS	MADE BY	DATE
1	RE-ISSUE	L. LOPEZ	2/02
2			
3			
4			

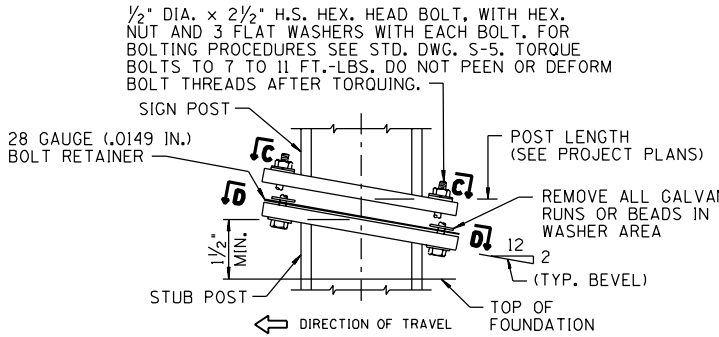

SIGN POST AND STUB POST ELEVATION

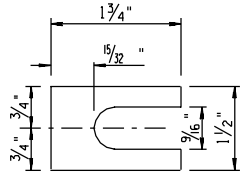

SHIM DETAIL

FURNISH 2 EACH 0.012"± THICK AND 2 EACH 0.032"± THICK SHIMS PER POST. SHIMS SHALL BE FABRICATED FROM BRASS SHIM STOCK OR STRIP CONFORMING TO THE REQUIREMENTS OF A.S.T.M. B36/B36M-95

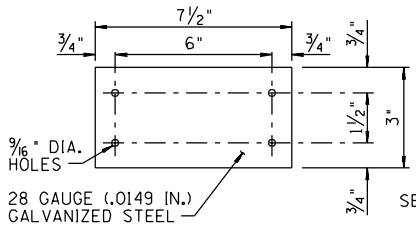

BOLT RETAINER

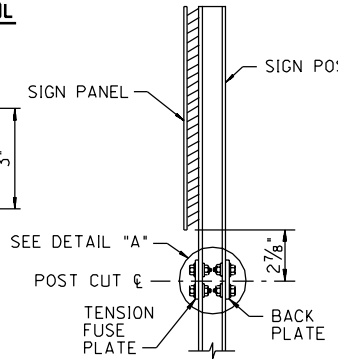

SIDE VIEW OF POST

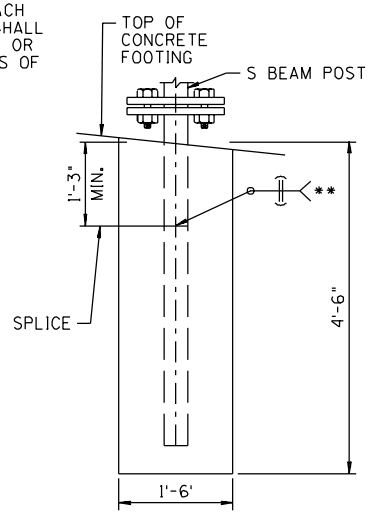

PERMISSIBLE SHOP SPLICE

** ALL SHOP SPLICES SHALL BE APPROVED BY THE ENGINEER. ALL WELDING SHALL BE IN ACCORDANCE WITH AWS-1.1 LATEST EDITION.

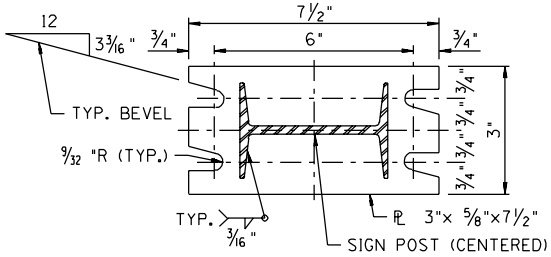

SECTION C-C

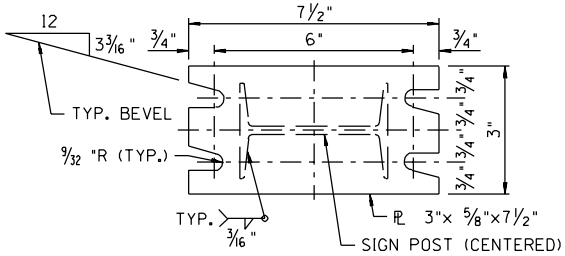

SECTION D-D

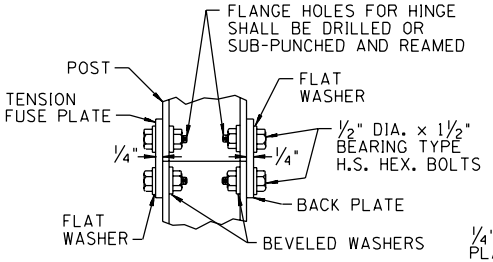

DETAIL "A" HINGE

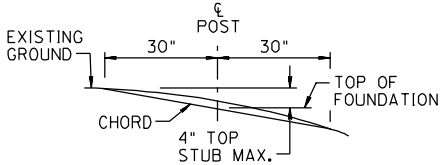

STUB PROJECTION LIMITS

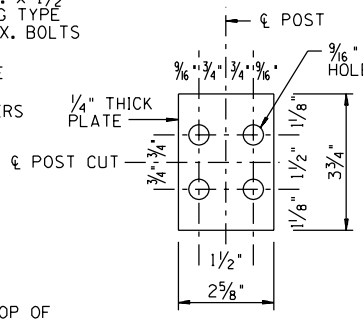

BACK PLATE
(S4x7.7)

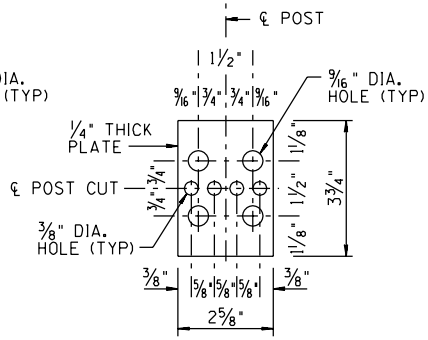

TENSION FUSE PLATE

NOTES:

1. SECTIONS SHOWN ARE FOR INSTALLATIONS ON RIGHT SHOULDER AND IN GORE. PLATE SLOT BEVELS ARE OPPOSITE HAND FROM THAT SHOWN FOR INSTALLATIONS ON LEFT SHOULDER.
2. ALL PLATE HOLES SHALL BE DRILLED. ALL PLATE CUTS SHALL PREFERABLY BE SAW CUTS; FLAME CUTTING WILL BE PERMITTED PROVIDED ALL EDGES ARE GROUND.

NOT TO SCALE

DESIGN APPROVED: SIGNATURE ON FILE	ARIZONA DEPARTMENT OF TRANSPORTATION INTERMODAL TRANSPORTATION DIVISION STANDARD DRAWINGS	REV. 2/02
APPROVED FOR DISTRIBUTION	BREAKAWAY POST DETAILS S4x7.7	DRAWING NO. S-6