NO	DESCRIPTION OF REVISIONS	MADE BY	DATE
1	RE-ISSUE	L. LOPEZ	2/02
2			
3			
4			

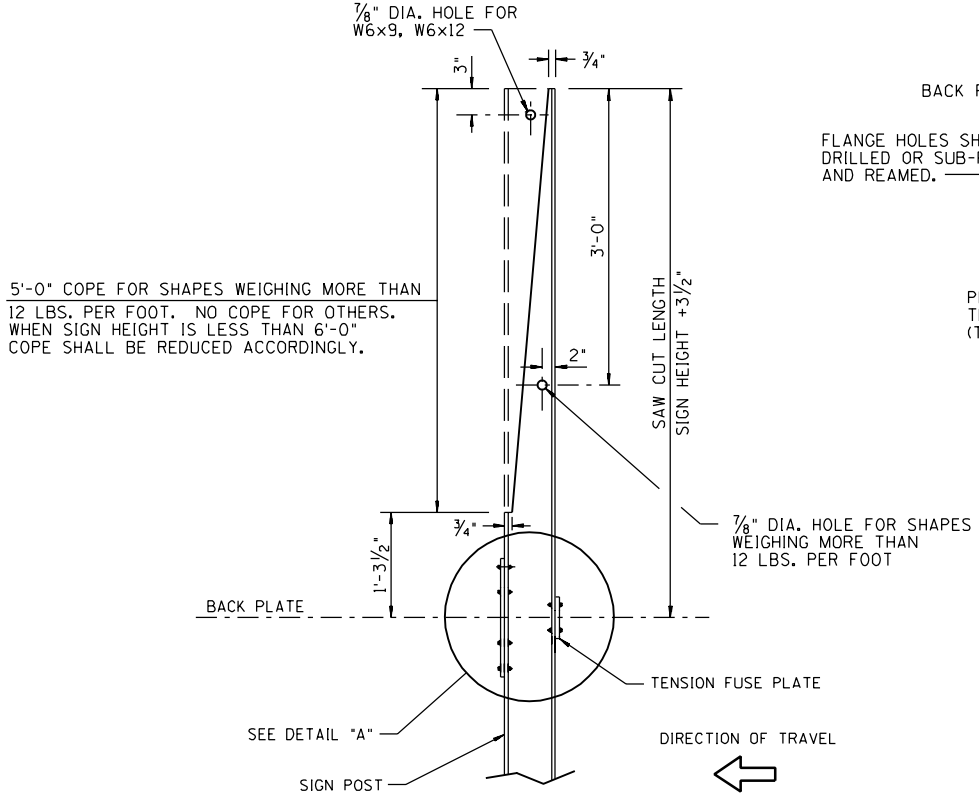

SIDE VIEW

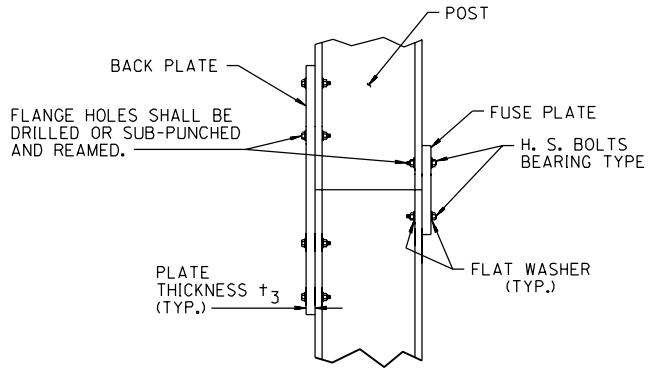

DETAIL "A" HINGE

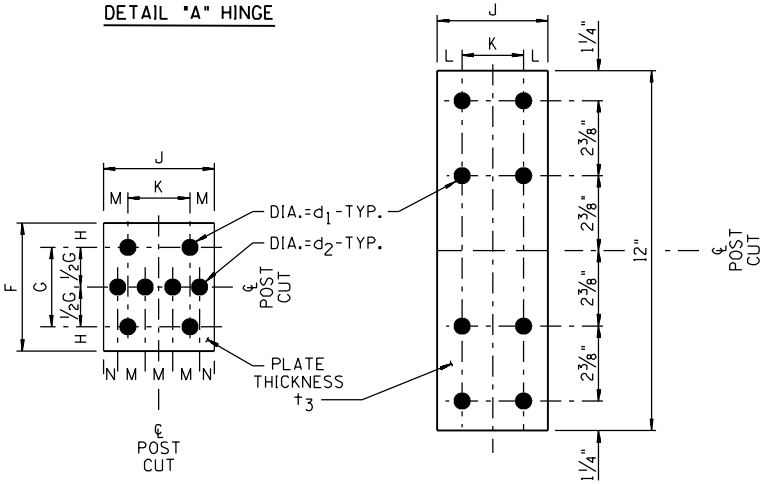

TENSION FUSE PLATE

BACK PLATE

(SEE TABLE FOR DIMENSIONS)

BACK PLATE AND TENSION FUSE PLATE DATA													
POST SIZE	DIMENSION FOR NEW POST SIZES												
	F	G	H	J	K	L	M	N	d_1	d_2	t_3	BOLT DIA.	BOLT LENGTH
W6x9 W6x12	4 3/4"	2 1/2"	1 1/8"	4"	2 1/4"	7/8"	1"	1/2"	9/16"	3/4"	1/4"	1/2"	1 1/2"
W8x18	5"	2 1/2"	1 1/4"	5 1/4"	2 3/4"	1 1/4"	1 1/4"	3/4"	11/16"	1 1/16"	3/8"	5/8"	1 7/8"
W10x22	5 1/2"	2 1/2"	1 1/2"	5 3/4"	2 3/4"	1 1/2"	1 3/8"	13/16"	13/16"	1 1/8"	1/2"	3/4"	2 1/8"
W12x26	5 1/2"	2 1/2"	1 1/2"	6 1/2"	3 1/2"	1 1/2"	1 5/8"	13/16"	13/16"	1 5/16"	1/2"	3/4"	2 1/8"

ALL PLATE HOLES SHALL BE DRILLED. ALL PLATE CUTS SHALL PREFERABLY BE SAW CUTS; FLAME CUTTING WILL BE PERMITTED, PROVIDED ALL EDGES ARE GROUND.

NOT TO SCALE

DESIGN APPROVED

SIGNATURE ON FILE

APPROVED FOR DISTRIBUTION

ARIZONA DEPARTMENT OF TRANSPORTATION
INTERMODAL TRANSPORTATION DIVISION
STANDARD DRAWINGS

REV. 2/02

W SHAPE TENSION FUSE PLATE AND HINGE DETAILS

DRAWING NO. S-4