NO	DESCRIPTION OF REVISIONS	MADE BY	DATE
1	RE-ISSUE	L. LOPEZ	2/02
2			
3			
4			

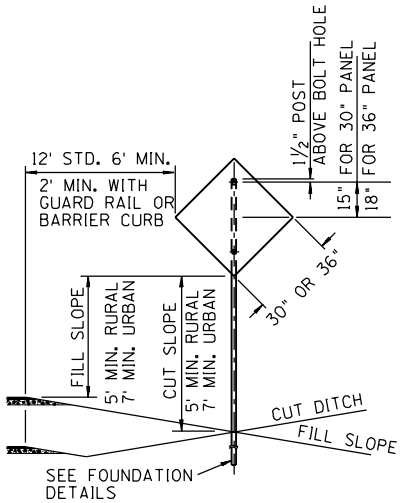

WARNING SIGN

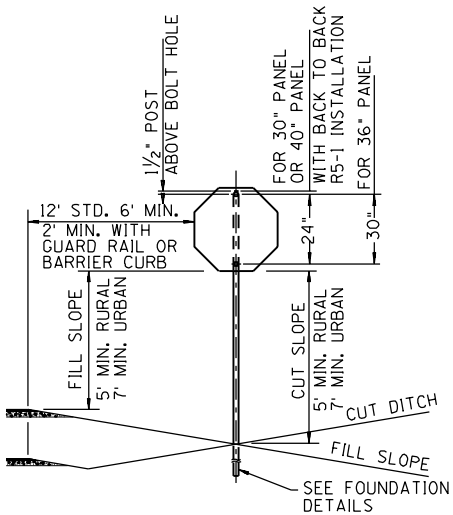

REGULATORY (STOP) SIGN

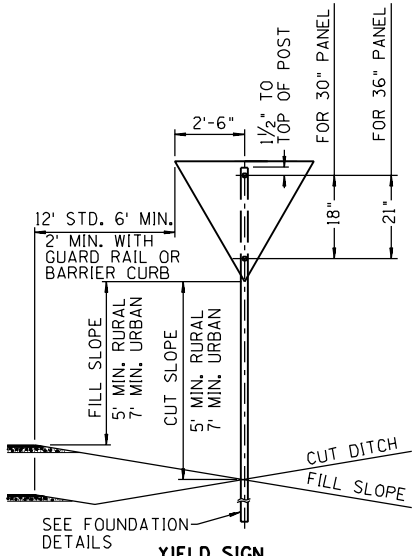

YIELD SIGN

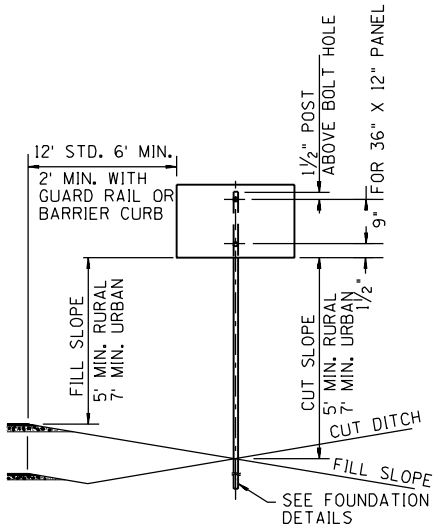

REGULATORY SIGN SINGLE POST

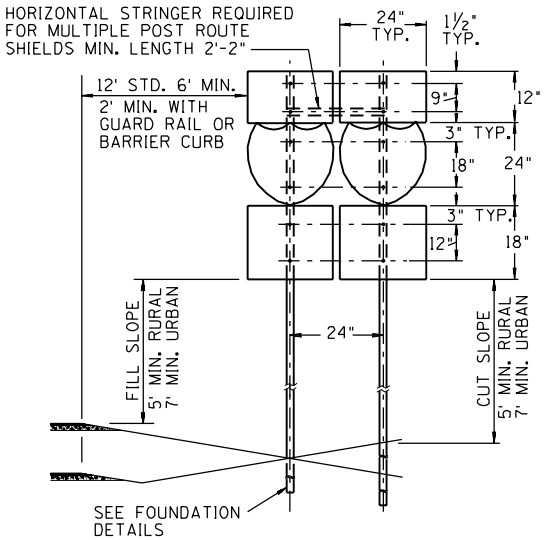

MULTIPLE ROUTE MARKER

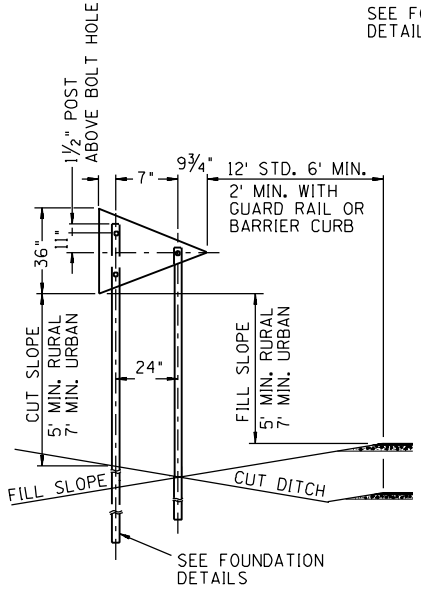

NO PASSING PENNANT

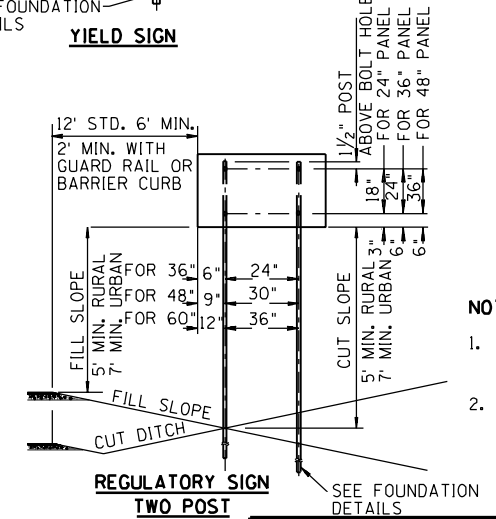

REGULATORY SIGN TWO POST

NOTES:

1. SEE FHWA STANDARD HIGHWAY SIGNS BOOKLET FOR PANEL BOLT HOLE. SPACING NOT SHOWN.
2. DETERMINE POST SIZES FROM SQUARE TUBE OR U-CHANNEL SELECTION CHART.

SHEET 3 OF 4
NOT TO SCALE

DESIGN APPROVED: SIGNATURE ON FILE	ARIZONA DEPARTMENT OF TRANSPORTATION INTERMODAL TRANSPORTATION DIVISION STANDARD DRAWINGS	REV. 2/02
APPROVED FOR DISTRIBUTION	OFFSETS, CLEARANCES AND MOUNTING DETAILS FOR SIGNS ON NON-FREEWAYS RAMPS AND CROSSROADS	DRAWING NO. S-3