NO	DESCRIPTION OF REVISIONS	MADE BY	DATE
1	ADDED NOTE #3. TEXT EDITS	L. LOPEZ	5/03
2	ADDED NOTE #4.	L. LOPEZ	2/04
3			
4			

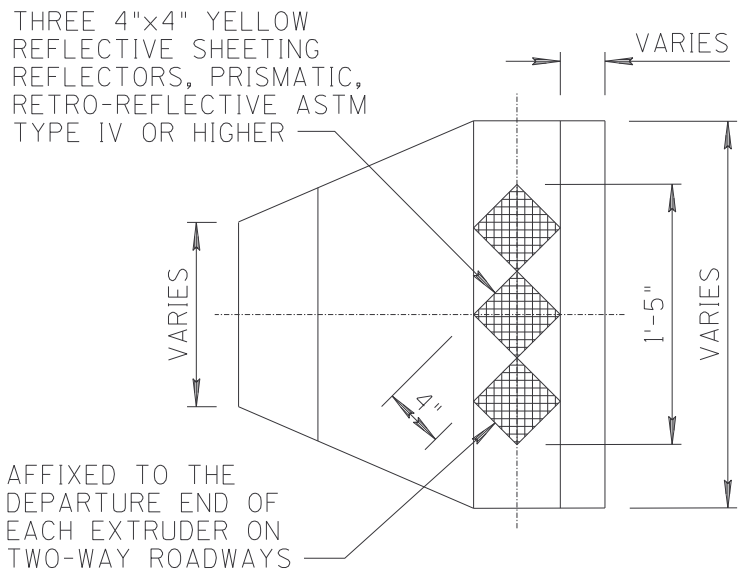

SECTION A-A

DELINEATION FOR THE SIDE OF THE GUARDRAIL EXTRUDER TERMINAL

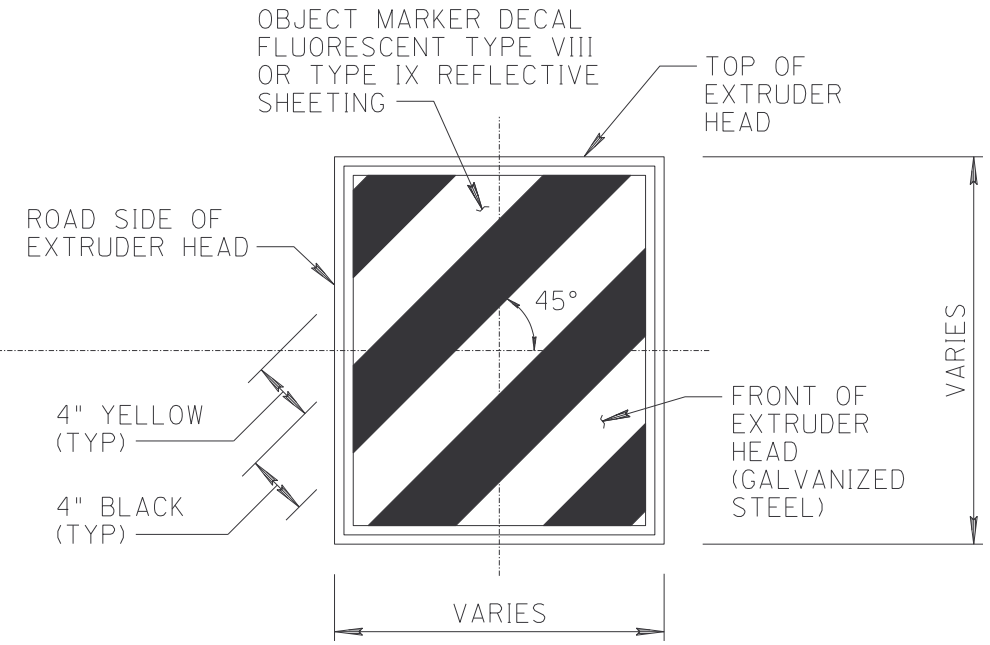

SECTION B-B
FACING TRAFFIC

DELINEATION FOR THE HEAD OF THE GUARDRAIL EXTRUDER TERMINAL

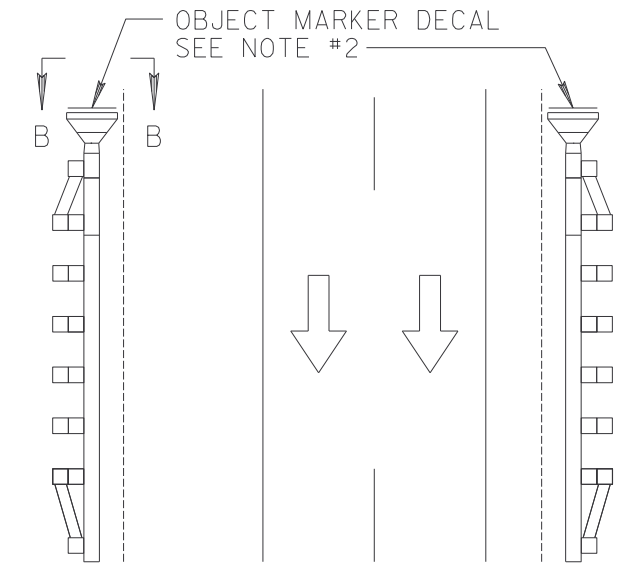

ONE-WAY ROADWAY

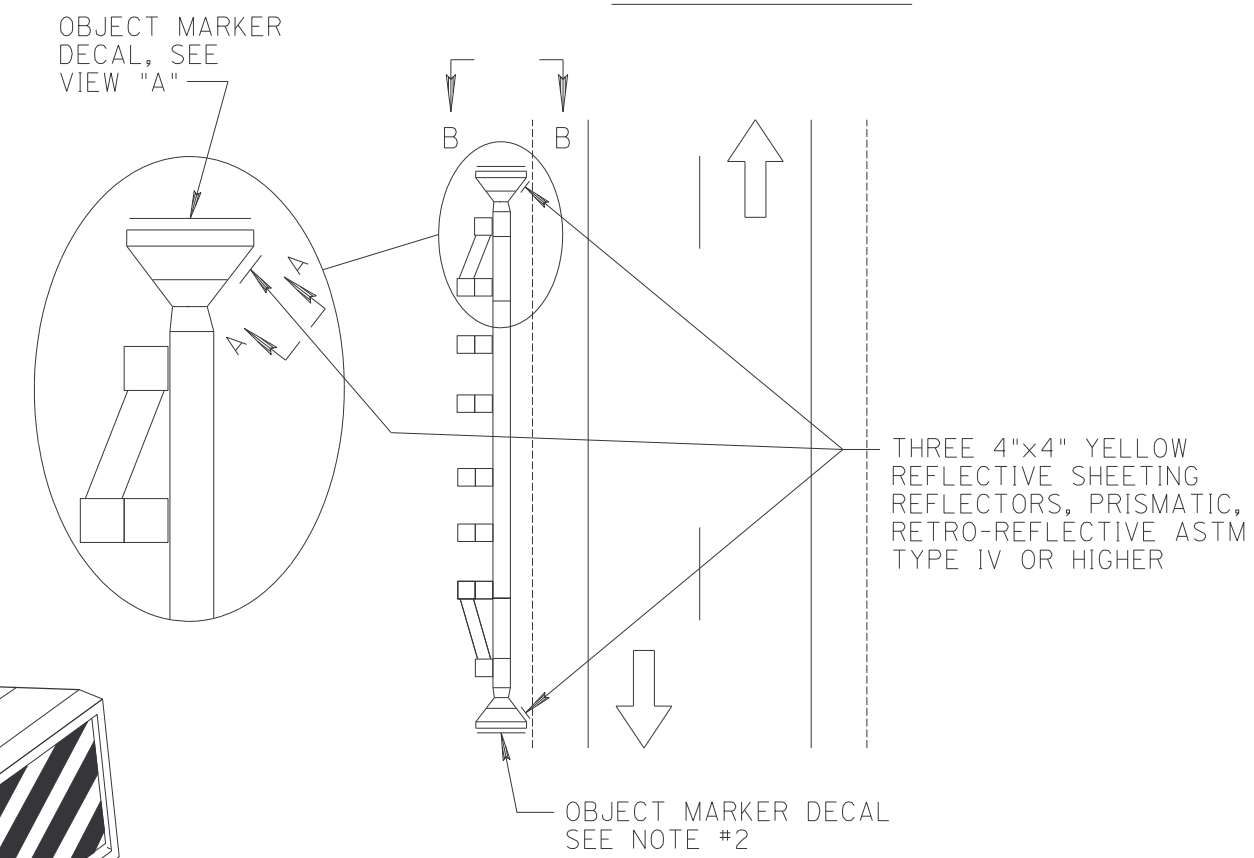

TWO-WAY ROADWAY

APPLICATION DETAIL FOR THE GUARDRAIL EXTRUDER TERMINAL

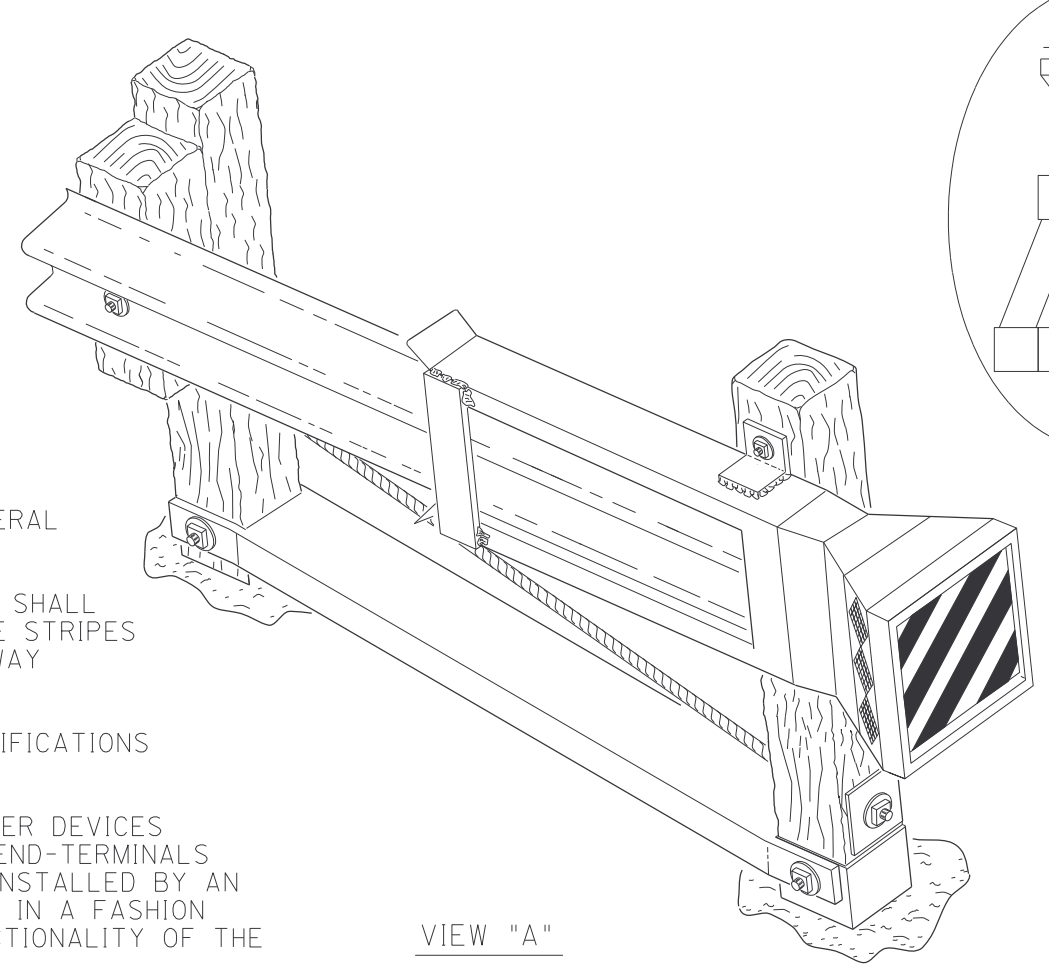

VIEW "A"

NOTES:

1. THESE DETAILS ARE APPLICABLE FOR SEVERAL MANUFACTURER'S SPECIFICATIONS.
2. ON TWO-WAY ROADWAYS, THE DELINEATION SHALL BE THE SAME FOR THE OPPOSITE END. THE STRIPES WILL POINT DOWN AND TOWARD THE ROADWAY OF ONE-WAY ROADWAYS.
3. SEE SECTION 905 OF THE STANDARD SPECIFICATIONS FOR GUARDRAIL MAKING REQUIREMENTS.
4. DELINEATORS, SNOW MARKERS OR ANY OTHER DEVICES SHALL NOT BE INSTALLED ON GUARDRAIL END-TERMINALS OR THEIR POSTS. IF THESE DEVICES ARE INSTALLED BY AN END-TERMINAL, THEY SHALL BE INSTALLED IN A FASHION THAT WILL NOT INTERFERE WITH THE FUNCTIONALITY OF THE END-TERMINAL.

NOT TO SCALE

DESIGN APPROVED	ARIZONA DEPARTMENT OF TRANSPORTATION INTERMODAL TRANSPORTATION DIVISION STANDARD DRAWINGS	REV. 2/04
APPROVED FOR DISTRIBUTION SIGNATURE ON FILE	GUARDRAIL EXTRUDER TERMINAL DELINEATION DETAILS	DRAWING NO. M-34