NO	DESCRIPTION OF REVISIONS	MADE BY	DATE
1	RE-DESIGN TYPE 2 OBJECT MARKERS	M. ZUBI	5/03
2			
3			
4			

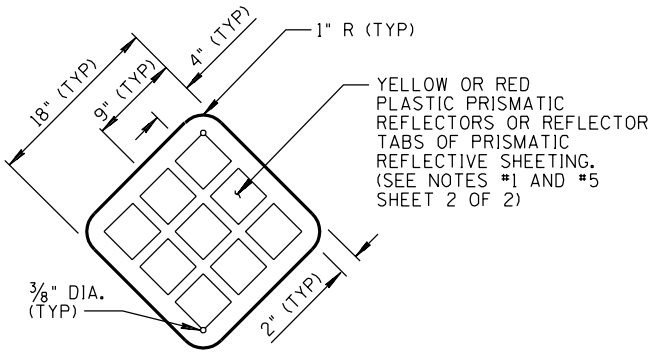

TYPE 1 OR 4
OBJECT MARKER

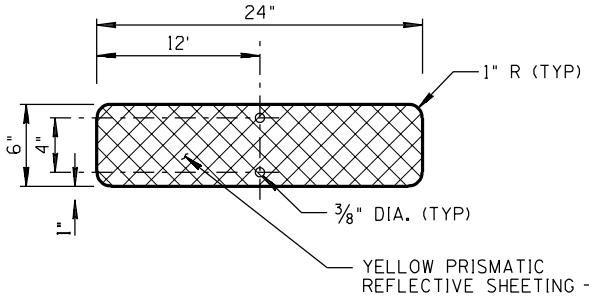

TYPE 2
OBJECT MARKER
HORIZONTAL

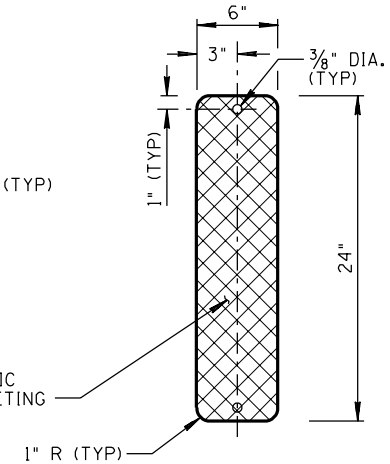

TYPE 2
OBJECT MARKER
VERTICAL

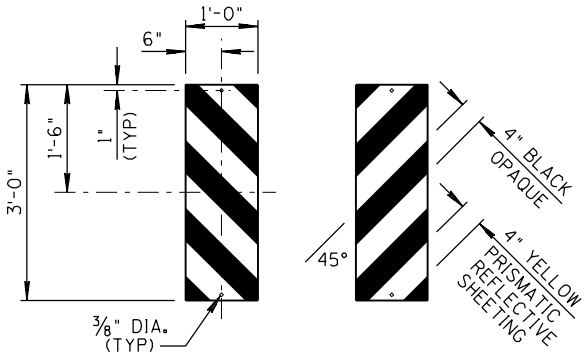

TYPE 3(1)L TYPE 3(1)R

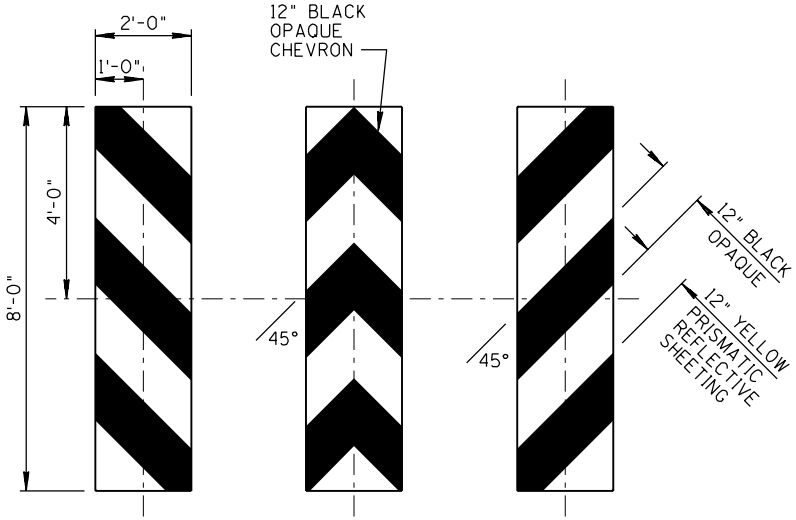

TYPE 3(2)L TYPE 3(2)C TYPE 3(2)R

TYPE 3
OBJECT MARKERS

SHEET 1 OF 2
NOT TO SCALE

DESIGN APPROVED SIGNATURE ON FILE	ARIZONA DEPARTMENT OF TRANSPORTATION INTERMODAL TRANSPORTATION DIVISION STANDARD DRAWINGS	REV. 5/03
APPROVED FOR DISTRIBUTION	OBJECT MARKER DETAILS	DRAWING NO. M-23