NO	DESCRIPTION OF REVISIONS	MADE BY	DATE
1	RE-ISSUE	L. LOPEZ	2/02
2			
3			
4			

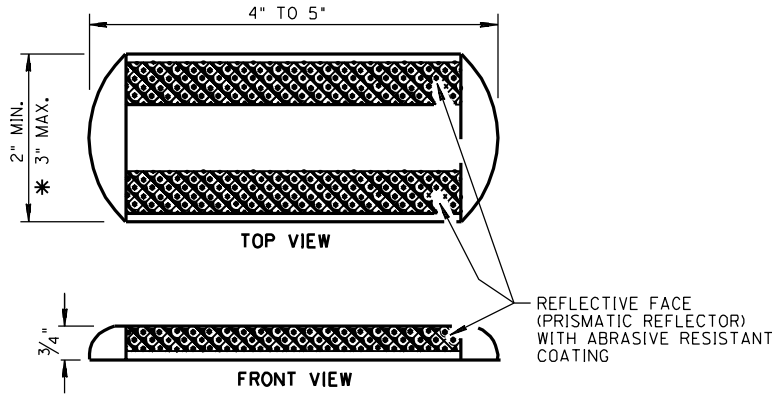

TYPES C AND D

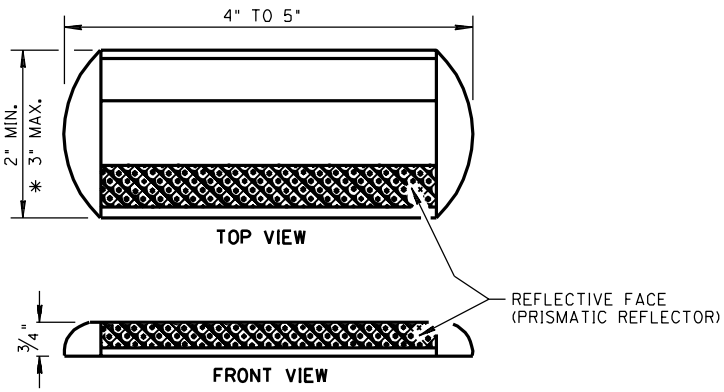

TYPES G AND H

RECESSED PAVEMENT MARKERS

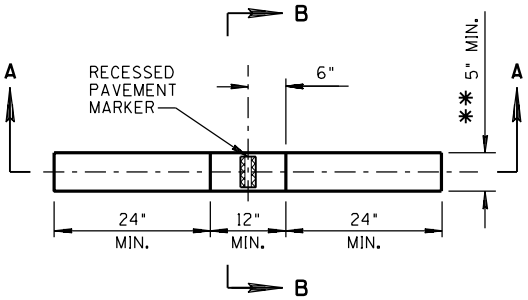

TYPES C AND D

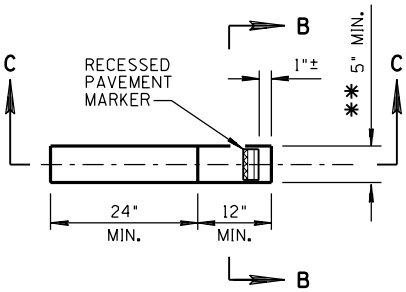

TYPES G AND H

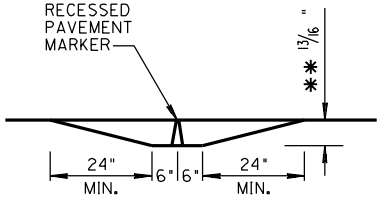

SECTION A-A

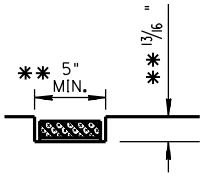

SECTION B-B

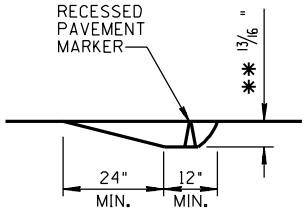

SECTION C-C

RECESS DETAILS

NOT TO SCALE

NOTES:

1. SHAPE OF MARKER SHOWN IS FOR INFORMATION ONLY. THE ACTUAL CONFIGURATION OF MARKERS CAN VARY INCLUDING THE SHAPE AND TYPE OF REFLECTING SURFACE.
2. TYPE C (CLEAR ON ONE SIDE/RED ON ONE SIDE) MARKERS ARE REFLECTORIZED AND INTENDED FOR USE WITH ONE-WAY TRAFFIC AS ON RAMPS AND DIVIDED HIGHWAYS.
3. TYPE D (YELLOW ON BOTH SIDES) MARKERS ARE REFLECTORIZED AND INTENDED FOR USE WITH TWO-WAY TRAFFIC.
4. TYPE G (CLEAR ON ONE SIDE) MARKERS ARE REFLECTORIZED AND INTENDED FOR USE WITH ONE-WAY TRAFFIC.
5. TYPE H (YELLOW ON ONE SIDE) MARKERS ARE REFLECTORIZED AND INTENDED FOR USE WITH TWO-WAY TRAFFIC.

*6. APPROVED CIRCULAR CERAMIC MARKERS 5 INCHES IN DIAMETER AND 1 INCH IN HEIGHT WITH A VERTICAL REFLECTIVE FACE(S) MAY ALSO BE USED, WITH CORRESPONDING INCREASES IN THE DEPTH OF THE PAVEMENT GROOVE.

**7. DEPTH AND WIDTH OF GROOVE MAY HAVE TO BE ADJUSTED TO FIT PHYSICAL DIMENSIONS OF MARKER SELECTED.

DESIGN APPROVED SIGNATURE ON FILE	ARIZONA DEPARTMENT OF TRANSPORTATION INTERMODAL TRANSPORTATION DIVISION STANDARD DRAWINGS	REV. 2/02
APPROVED FOR DISTRIBUTION	RECESSED PAVEMENT MARKER DETAILS	DRAWING NO. M-18