NO	DESCRIPTION OF REVISIONS	MADE BY	DATE
1	RE-ISSUE	L. LOPEZ	2/02
2	ADDED NEW DESIGN FOR HANDICAP RAMPS.	L. LOPEZ	2/04
3			
4			

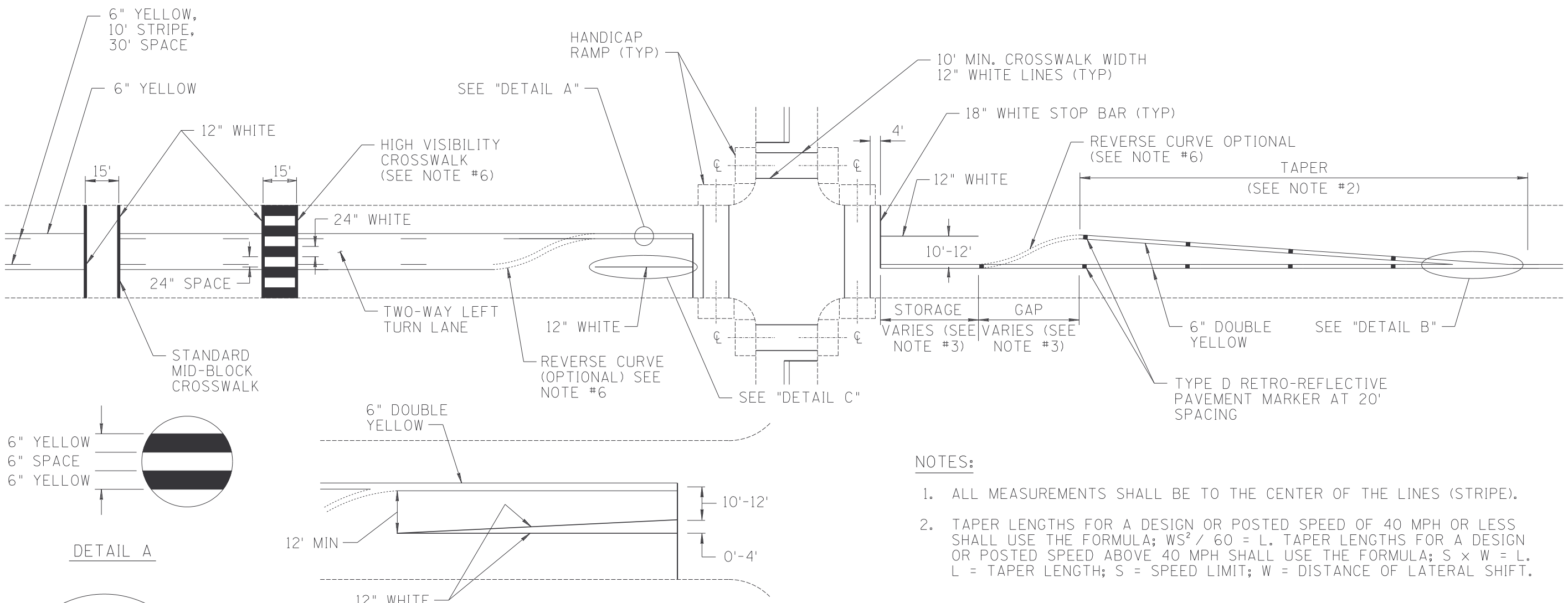

DETAIL A

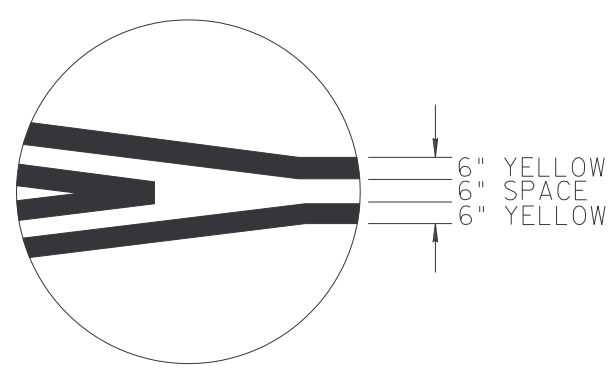

DETAIL B

DETAIL C
12 FT. TO 16 FT. MEDIAN

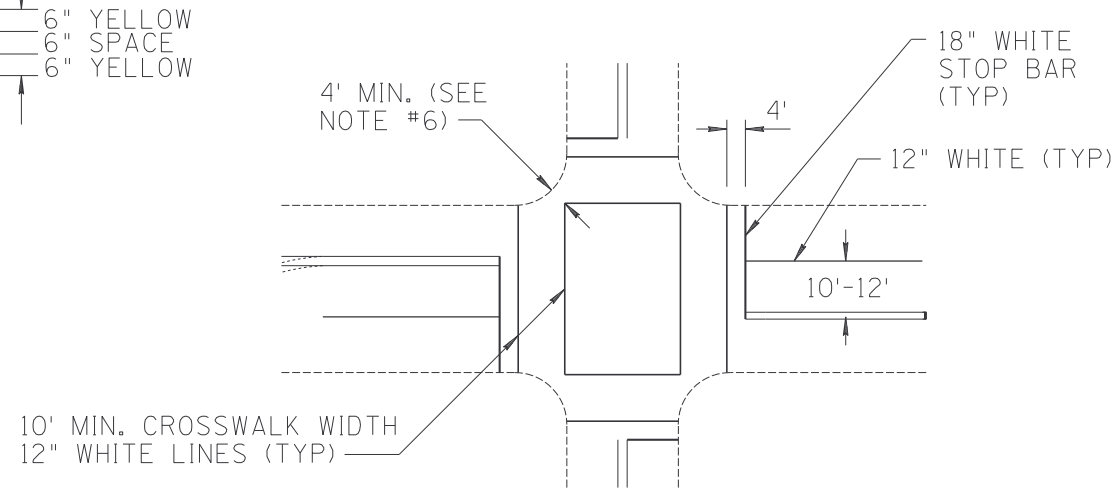

DETAIL D

NOTES:

1. ALL MEASUREMENTS SHALL BE TO THE CENTER OF THE LINES (STRIPE).
2. TAPER LENGTHS FOR A DESIGN OR POSTED SPEED OF 40 MPH OR LESS SHALL USE THE FORMULA; $WS^2 / 60 = L$. TAPER LENGTHS FOR A DESIGN OR POSTED SPEED ABOVE 40 MPH SHALL USE THE FORMULA; $S \times W = L$. L = TAPER LENGTH; S = SPEED LIMIT; W = DISTANCE OF LATERAL SHIFT.
3. REFER TO TRAFFIC GROUP POLICIES, GUIDELINES AND PROCEDURES FOR TURN LANE DESIGN. ALSO SEE STD. DWG. M-11.
4. NUMBER AND LOCATIONS OF CROSSWALKS AT AN INTERSECTION MAY VARY AS REQUIRED BY THE RAMP LOCATIONS AND AS DIRECTED BY THE ENGINEER. RAMP IS TYPICALLY CENTERED IN CROSSWALK. FOR RAMPS WITHOUT LANDINGS SEE DETAIL D.
5. FOR ARROW AND "ONLY" PAVEMENT MARKING SEE STANDARD DRAWING M-11.
6. TO BE INSTALLED ONLY WHEN DIRECTED BY THE ENGINEER.

SHEET 1 OF 3
NOT TO SCALE

DESIGN APPROVED SIGNATURE ON FILE	ARIZONA DEPARTMENT OF TRANSPORTATION INTERMODAL TRANSPORTATION DIVISION STANDARD DRAWINGS	REV. 2/04
APPROVED FOR DISTRIBUTION	INTERSECTION STRIPING	DRAWING NO. M-2