NO	DESCRIPTION OF REVISIONS	MADE BY	DATE
1	RE-ISSUE	L. LOPEZ	7/02
2	LOOP BAR AND SLOT (2") DIMENSION ADDED.	L. LOPEZ	3/03
3			
4			

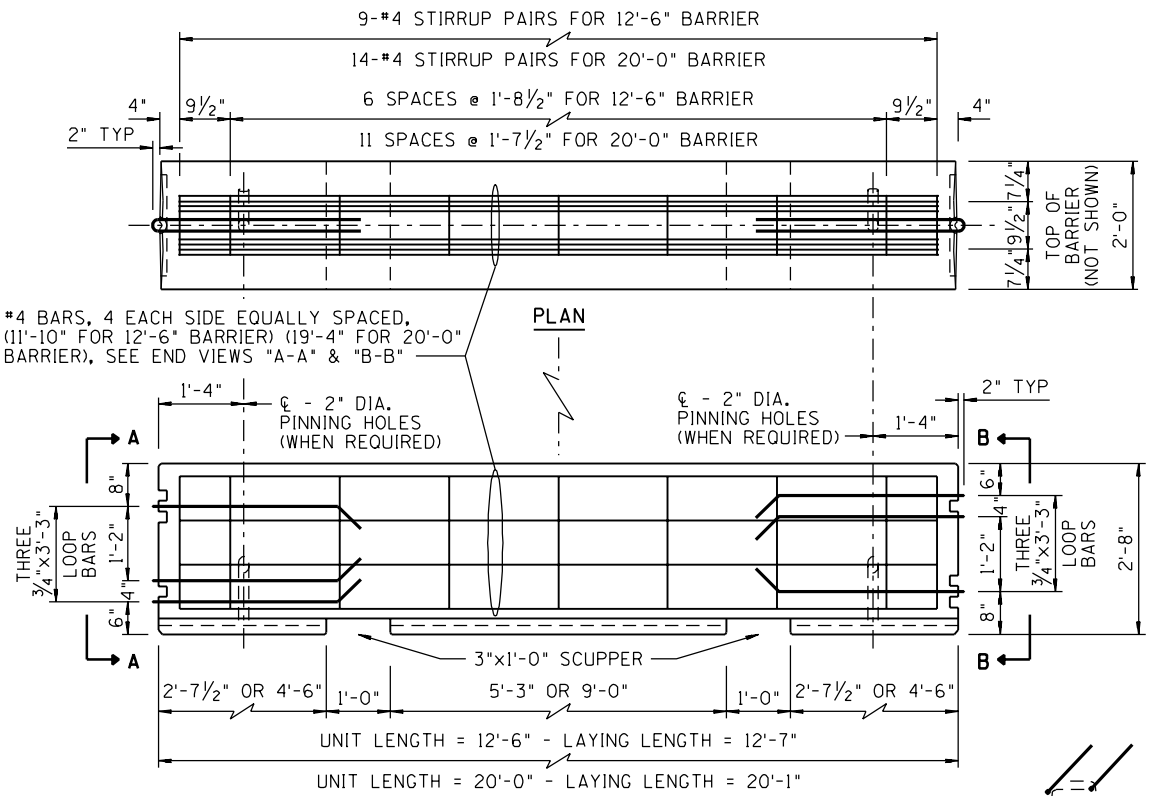

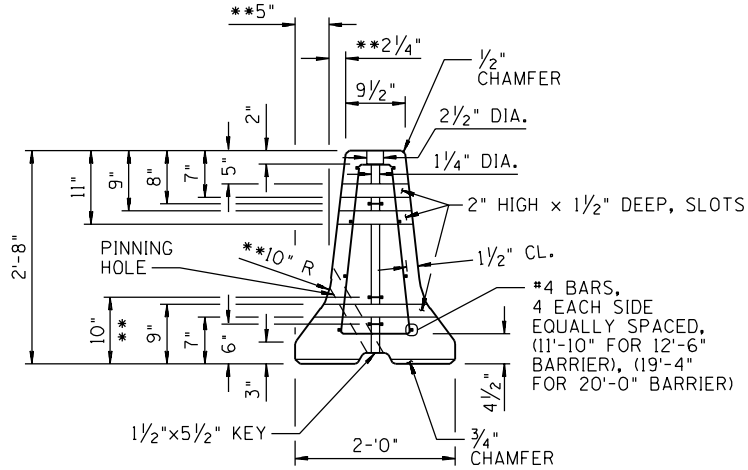

END VIEW A-A

SEE SHEET 2 OF 3 FOR PINNING HOLE DETAILS

** DIMENSIONS ARE TO THE INTERSECTION POINT OF THE BARRIER SLOPES. CONSTRUCT THE 10 INCH RADIUS TO PROVIDE A SMOOTH TRANSITION BETWEEN THE SLOPES.

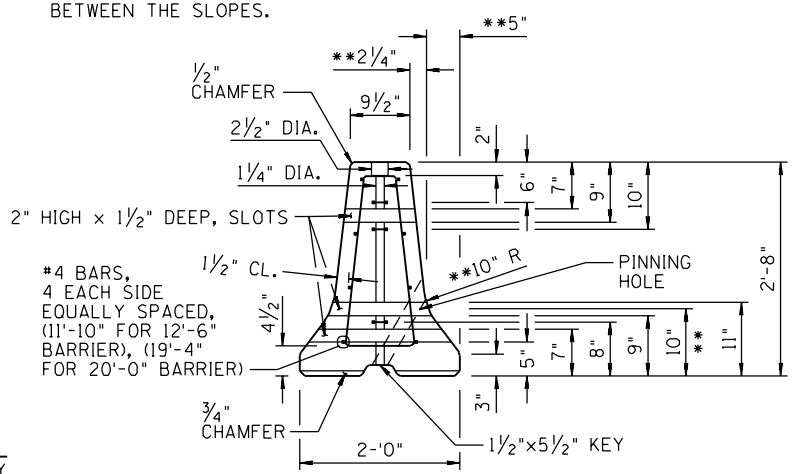

END VIEW B-B

SEE SHEET 2 OF 3 FOR PINNING HOLE DETAILS

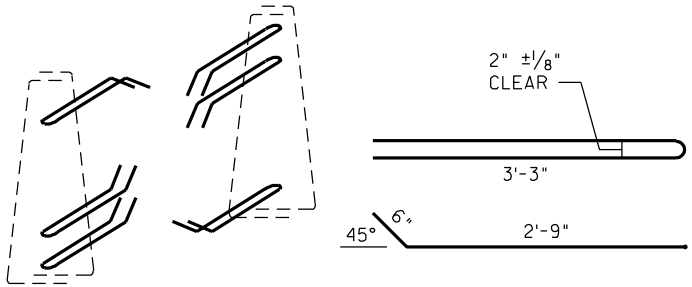

LOOP BAR

A-36 (ASTM A-709, HPS 70W, S84, ZONE 2) HOT-DIP GALVANIZED AFTER FABRICATION

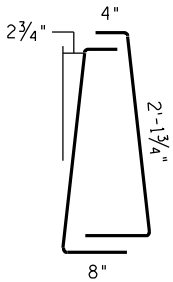

#4 STIRRUP PAIRS

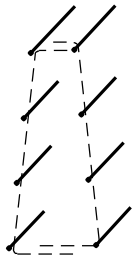

#4 BARS

4 EACH SIDE EQUALLY SPACED, (11'-10" FOR 12'-6" BARRIER) (19'-4" FOR 20'-0" BARRIER)

SHEET 1 OF 3
NOT TO SCALE

DESIGN APPROVED	ARIZONA DEPARTMENT OF TRANSPORTATION INTERMODAL TRANSPORTATION DIVISION STANDARD DRAWINGS	REV. 3/03
APPROVED FOR DISTRIBUTION	PRECAST CONCRETE BARRIER PIN AND LOOP ASSEMBLY NCHRP 350 APPROVED DESIGN	DRAWING NO. C-3

SIGNATURE ON FILE