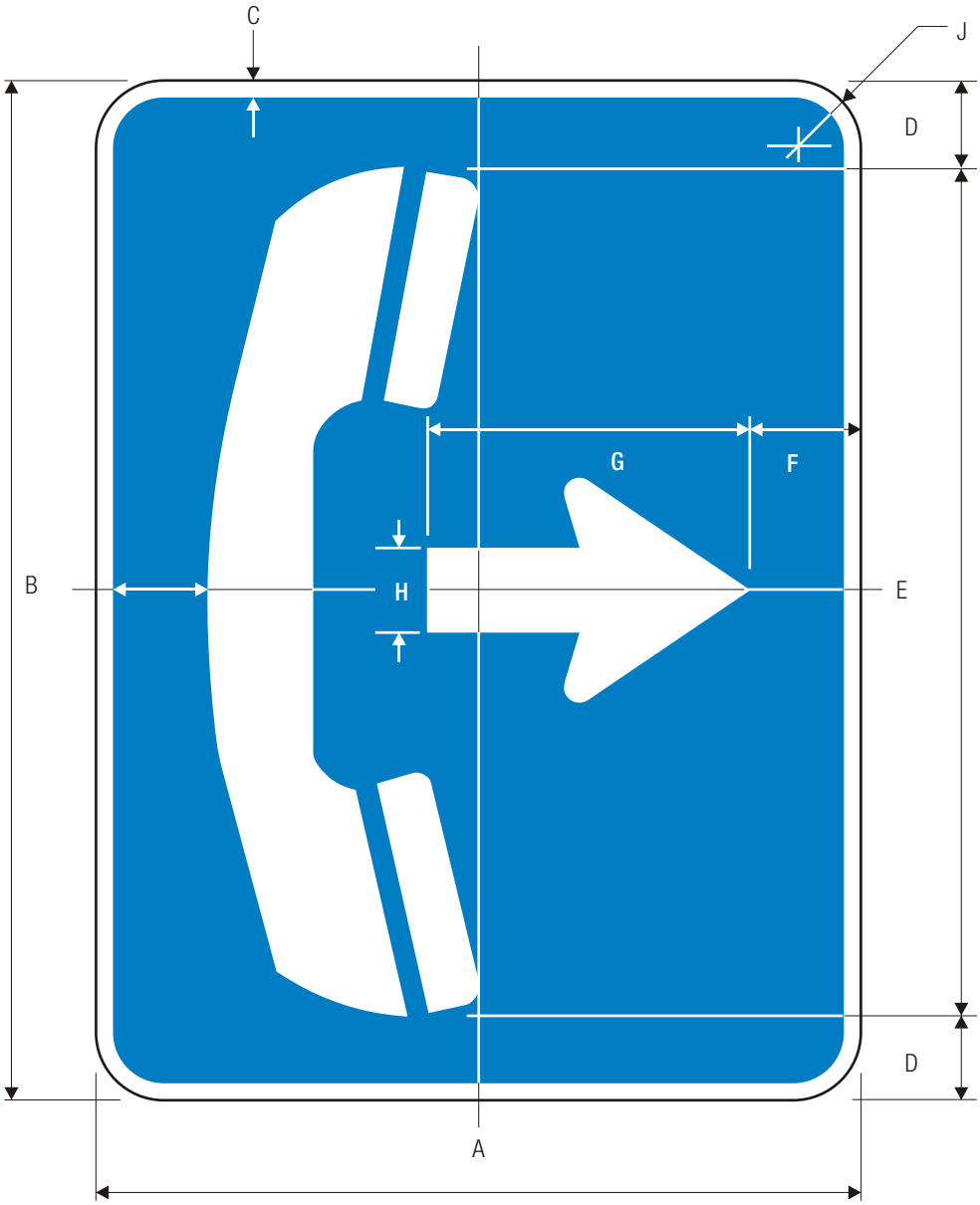

D9-1a

TELEPHONE

*See grid for details and standard arrow details

A	B	C	D	E	F	G	H	J
18	24	.5	2	20	1.75	8.5	2	1.5
24	30	.625	2.5	25	2.5	10.5	2.625	1.5
30	36	.75	3	30	3	13.25	3.25	1.875

COLORS: SYMBOL WHITE (RETROREFLECTIVE)
BACKGROUND BLUE (RETROREFLECTIVE)