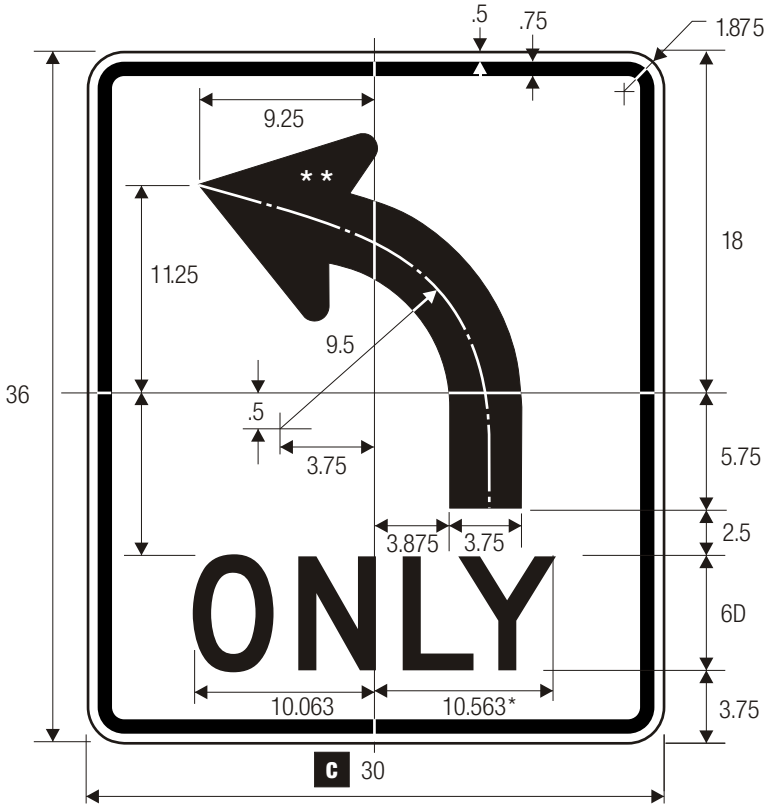

R3-5R

*Reduce spacing to fit.
**See Standard Arrow Details

R3-5L MANDATORY MOVEMENT LANE CONTROL

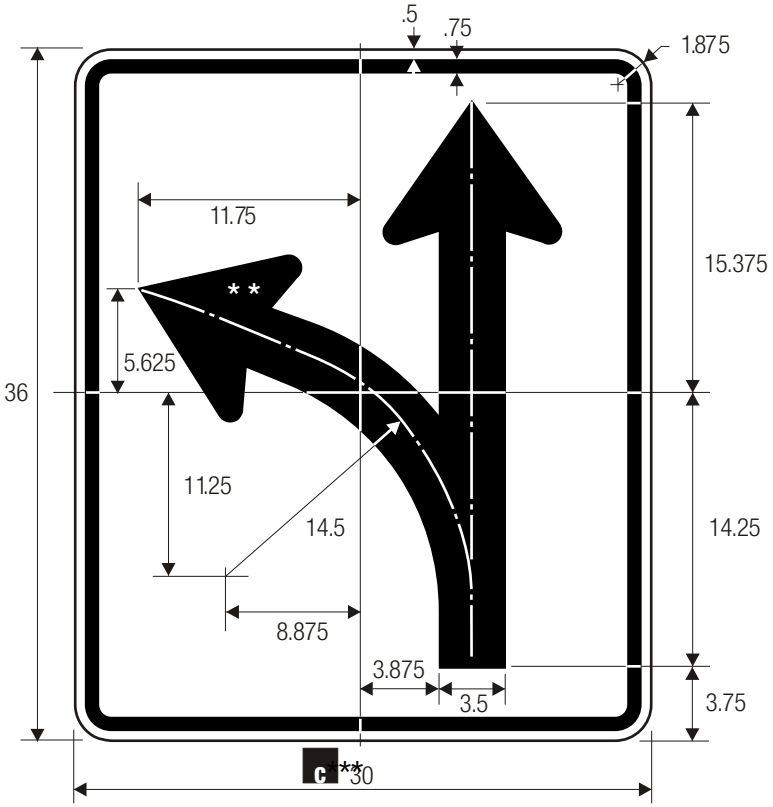

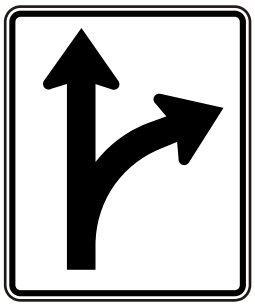

***Optional, add letters.

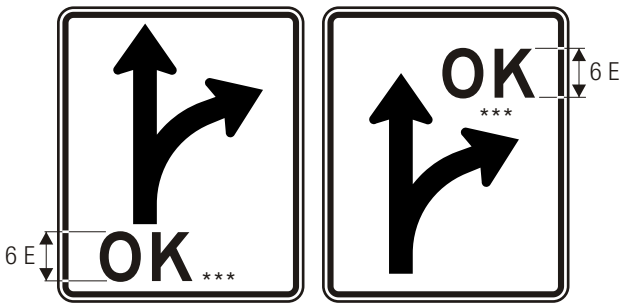

R3-6R

R3-6L OPTIONAL MOVEMENT LANE CONTROL

COLORS: LEGEND — BLACK
BACKGROUND — WHITE (RETROREFLECTIVE)