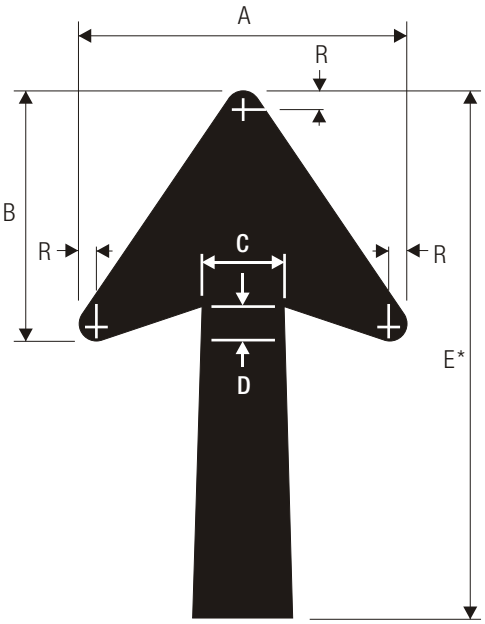

UP ARROW

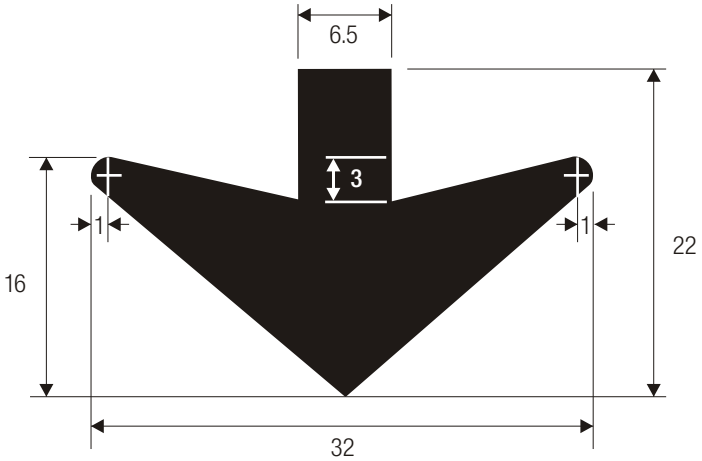

DOWN ARROW

ARROWS FOR GUIDE SIGNS

Dimensions of Arrow When Used With Various Letter Cap Heights.

Letter Size	A	B	C	D	E*	R
8	15.125	11.563	3.75	1.313	17-25	.813
10-13.3	18.25	14	4.5	1.5	20-30	.75
16	22.25	17	5.375	1.75	25-35	1

*Taper of .5" per ft. should be held constant for longer or shorter shaft lengths.